BELLSOUTH® / CLEC Agreement

Customer Name: Talk America

The Other Phone Company dba Access One & Talk America Agreement	2
General Terms and Conditions	3
Resale	30
Resale Rates	53
Network Elements	55
Network Element Rates	127
Local Interconnection	479
Local Interconnection Rates	508
Central Office Collocation	517
Remote Site Collocation	557
Collocation Rates	594
Numbers and Number Portability	629
Interim Number Portability Rates	636
Ordering and Provisioning	645
Billing	656
Billing Rates	675
Rights of Way	684
Performance Measurements	686
Disaster Recovery Plan	839
BFR-NBR Process	848
The Other Phone Company dba Access One & Talk America - RCF Amendment	853

Note: This page is not part of the actual signed contract/amendment, but is present for record keeping purposes only.

By and Between

BellSouth Telecommunications, Inc.

And

The Other Phone Company, Inc. d/b/a Access One Communications

The Other Phone Company, Inc. d/b/a Talk America, Inc.

(NOT in Florida)

and

Talk America Inc.

AGREEMENT

THIS AGREEMENT is made by and between BellSouth Telecommunications, Inc., ("BellSouth"), a Georgia corporation, and The Other Phone Company, Inc. d/b/a Access One Communications, a Florida corporation, The Other Phone Company, Inc. d/b/a Talk America Inc., (NOT in Florida) a Florida corporation and Talk America Inc., a Pennsylvania corporation (collectively referred to as "Talk America"), and shall be deemed effective 30 days after the date of the last signature of both Parties ("Effective Date"). This Agreement may refer to either BellSouth or Talk America or both as a "Party" or "Parties".

W I T N E S S E T H

WHEREAS, BellSouth is a local exchange telecommunications company authorized to provide telecommunications services in the states of Alabama, Florida, Georgia, Kentucky, Louisiana, Mississippi, North Carolina, South Carolina and Tennessee; and

WHEREAS, Talk America is a CLEC authorized to provide telecommunications services in one or more of the following states: Alabama, Florida, Georgia, Kentucky, Louisiana, Mississippi, North Carolina, South Carolina, and Tennessee; and

WHEREAS, Talk America wishes to resell BellSouth's telecommunications services and purchase network elements and other services, and the Parties wish to interconnect their facilities and exchange traffic pursuant to Sections 251 and 252 of the Act.

NOW THEREFORE, in consideration of the mutual agreements contained herein, BellSouth and Talk America agree as follows:

Definitions

Affiliate is defined as a person that (directly or indirectly) owns or controls, is owned or controlled by, or is under common ownership or control with, another person. For purposes of this paragraph, the term "own" means to own an equity interest (or equivalent thereof) of more than 10 percent.

Commission is defined as the appropriate regulatory agency in each of BellSouth's nine-state region, Alabama, Florida, Georgia, Kentucky, Louisiana, Mississippi, North Carolina, South Carolina, and Tennessee.

Competitive Local Exchange Carrier (CLEC) means a telephone company certificated by the Commission to provide local exchange service within BellSouth's franchised area.

End User means the ultimate user of the Telecommunications Service.

FCC means the Federal Communication Commission.

General Terms and Conditions means this document including all of the terms, provisions and conditions set forth herein.

Telecommunications means the transmission, between or among points specified by the user, of information of the user's choosing, without change in the form or content of the information as sent and received.

Telecommunications Service means the offering of telecommunications for a fee directly to the public, or to such classes of users as to be effectively available directly to the public, regardless of the facilities used.

Telecommunications Act of 1996 ("Act") means Public Law 104-104 of the United States Congress effective February 8, 1996. The Act amended the Communications Act of 1934 (47 U.S.C. Section 1 et. seq.).

1. CLEC Certification

1.1 Talk America has provided to BellSouth in writing the certificate number or docket number, for the docket pending certification, for all states covered by this Agreement except Kentucky.

1.2 BellSouth will file this Agreement with the appropriate commission for approval.

2. Term of the Agreement

2.1 The term of this Agreement shall be three years, beginning on the Effective Date and shall apply to the BellSouth territory in the state(s) of Alabama, Florida, Georgia, Kentucky, Louisiana, Mississippi, North Carolina, South Carolina and Tennessee.

2.2 The Parties agree that by no later than one hundred and eighty (180) days prior to the expiration of this Agreement, they shall commence negotiations for a new agreement to be effective beginning on the expiration date of this Agreement ("Subsequent Agreement"). If as of the expiration of this Agreement, a Subsequent Agreement has not been executed by the Parties, then except as set forth in Section 2.3.2 below, this Agreement shall continue on a month-to-month basis while a Subsequent Agreement is being negotiated. The Parties' rights and obligations with respect to this Agreement after expiration shall be as set forth in Section 2.3 below.

2.3 If, within one hundred and thirty-five (135) days of commencing the negotiation referred to in Section 2.2 above, the Parties are unable to negotiate new terms, conditions and prices for a Subsequent Agreement, either Party may petition the Commission to establish appropriate terms, conditions and prices for the Subsequent Agreement pursuant to 47 U.S.C. 252. In the event the Commission does not issue its order prior to the expiration date of this Agreement, or if the

Parties continue beyond the expiration date of this Agreement to negotiate the Subsequent Agreement without Commission intervention, the terms, conditions and prices ultimately ordered by the Commission, or negotiated by the Parties, shall be retroactive to the day following the expiration date of this Agreement.

2.3.1 Except as set forth in Section 2.3.2 below, notwithstanding the foregoing, in the event that as of the date of expiration of this Agreement and conversion of this Agreement to a month-to-month term, the Parties have not entered into a Subsequent Agreement and no arbitration proceeding has been filed in accordance with Section 2.3 above, or the Parties have not mutually agreed (where permissible) to extend the arbitration window for petitioning the applicable Commission(s) for resolution of those terms upon which the Parties have not agreed, then either Party may terminate this Agreement upon sixty (60) days notice to the other Party. In the event that BellSouth terminates this Agreement as provided above, BellSouth shall continue to offer services to Talk America pursuant to the terms, conditions and rates set forth in BellSouth's then current standard interconnection agreement. In the event that BellSouth's standard interconnection agreement becomes effective as between the Parties, the Parties may continue to negotiate a Subsequent Agreement, and the terms of such Subsequent Agreement shall be retroactive to the day following the expiration date of this Agreement.

2.3.2 Notwithstanding Section 2.3 above, in the event that as of the date of expiration of this Agreement the Parties have not entered into a Subsequent Agreement and (1) no arbitration proceeding has been filed in accordance with Section 2.2 above, and (2) Talk America either is not certified as a CLEC in any particular state to which this Agreement applies or has not ordered any services under this Agreement as of the date of expiration, then this Agreement shall not continue on a month to month basis but shall be deemed terminated as of the expiration date hereof.

3. Operational Support Systems

3.1 Talk America shall pay charges for Operational Support Systems (OSS) as set forth in this Agreement in Attachment 1 and/or in Attachments 2, 3 and 5, as applicable.

4. Parity

4.1 When Talk America purchases, pursuant to Attachment 1 of this Agreement, telecommunications services from BellSouth for the purposes of resale to End Users, BellSouth shall provide said services so that the services are equal in quality, subject to the same conditions, and provided within the same provisioning time intervals that BellSouth provides to its affiliates, subsidiaries and End Users. The quality of a Network Element, as well as the quality of the access to such Network Element provided by BellSouth to Talk America shall be at least equal in quality to that which BellSouth provides to itself, its affiliates or any other telecommunications carrier. The provisioning intervals for Network Elements shall

be at least equal to, but no longer than, those that BellSouth provides to itself. BellSouth shall make available Network Elements to Talk America on the same terms and conditions as BellSouth provides to its affiliates, subsidiaries, End Users and any other carriers. The quality of the interconnection between the networks of BellSouth and the network of Talk America shall be at a level that is equal to that which BellSouth provides itself, a subsidiary, an Affiliate, or any other party. The interconnection facilities shall be designed to meet the same technical criteria and service standards that are used within BellSouth's network and shall extend to a consideration of service quality as perceived by BellSouth's end users and service quality as perceived by Talk America.

5. White Pages Listings

5.1 BellSouth shall provide Talk America and their customers access to white pages directory listings in the same manner BellSouth provides such listings to its own end users, and consistent with the following terms:

5.2 Listings. Talk America shall provide all new, changed and deleted listings on a timely basis and BellSouth or its agent will include Talk America residential and business customer listings in the appropriate White Pages (residential and business) or alphabetical directories. Directory listings will make no distinction between Talk America and BellSouth subscribers.

5.2.1 Rates. So long as Talk America provides subscriber listing information to BellSouth in accordance with Section 5.3 below, BellSouth shall provide to Talk America one (1) primary White Pages listing per Talk America subscriber at no charge other than applicable service order charges as set forth in Section A4 of the BellSouth General Subscriber Services Tariffs. These service order charges are applicable for resale services only. These service order charges are in addition to the OSS charges which are applicable for all services.

5.3 Procedures for Submitting Talk America Subscriber Information are found in The BellSouth Business Rules for Local Ordering.

5.3.1 Notwithstanding any provision(s) to the contrary, Talk America shall provide to BellSouth, and BellSouth shall accept, Talk America's Subscriber Listing Information (SLI) relating to Talk America's customers in the geographic area(s) covered by this Interconnection Agreement. Talk America authorizes BellSouth to release all such Talk America SLI provided to BellSouth by Talk America to qualifying third parties via either license agreement or BellSouth's Directory Publishers Database Service (DPDS), General Subscriber Services Tariff, Section A38.2, as the same may be amended from time to time. Such Talk America SLI shall be intermingled with BellSouth's own customer listings and listings of any other CLEC that has authorized a similar release of SLI. Where necessary, BellSouth will use good faith efforts to obtain state commission approval of any necessary modifications to Section A38.2 of its tariff to provide for release of third party directory listings, including modifications regarding listings to be released

pursuant to such tariff and BellSouth's liability thereunder. BellSouth's obligation pursuant to this Section shall not arise in any particular state until the commission of such state has approved modifications to such tariff.

5.3.2 No compensation shall be paid to Talk America for BellSouth's receipt of Talk America SLI, or for the subsequent release to third parties of such SLI. In addition, to the extent BellSouth incurs costs to modify its systems to enable the release of Talk America's SLI, or costs on an ongoing basis to administer the release of Talk America SLI, Talk America shall pay to BellSouth its proportionate share of the reasonable costs associated therewith.

5.3.3 Neither BellSouth nor any agent shall be liable for the content or accuracy of any SLI provided by Talk America under this Agreement. Talk America shall indemnify, hold harmless and defend BellSouth and its agents from and against any damages, losses, liabilities, demands claims, suits, judgments, costs and expenses (including but not limited to reasonable attorneys' fees and expenses) arising from BellSouth's tariff obligations or otherwise and resulting from or arising out of any third party's claim of inaccurate Talk America listings or use of the SLI provided pursuant to this Agreement. BellSouth may forward to Talk America any complaints received by BellSouth relating to the accuracy or quality of Talk America listings.

5.3.4 Listings and subsequent updates will be released consistent with BellSouth system changes and/or update scheduling requirements.

5.4 Unlisted/Non-Published Subscribers. Talk America will be required to provide to BellSouth the names, addresses and telephone numbers of all Talk America customers that wish to be omitted from directories.

5.5 Inclusion of Talk America Customers in Directory Assistance Database. BellSouth will include and maintain Talk America subscriber listings in BellSouth's Directory Assistance databases at no recurring charge and Talk America shall provide such Directory Assistance listings at no recurring charge. Changes to subscriber listing information may be subject to non recurring charges as set forth in Section 5.2.1. BellSouth will update the Directory Assistance database with the same timeliness as for its retail end users. BellSouth and Talk America will formulate appropriate procedures regarding lead-time, timeliness, format and content of listing information.

5.6 Listing Information Confidentiality. BellSouth will accord Talk America's directory listing information the same level of confidentiality that BellSouth accords its own directory listing information, and BellSouth shall limit access to Talk America's customer proprietary confidential directory information to those BellSouth employees or agents who are involved in the preparation of listings or directories and such information shall not be used for other purposes.

5.7 Additional and Designer Listings. Additional and designer listings will be offered by BellSouth at tariffed rates as set forth in the General Subscriber Services Tariff.

5.7.1 Enhanced Listings. Where BellSouth offers to publish, at no charge, in its white pages directory Enhanced White Pages Listings to its retail customers, BellSouth shall publish such listings, at no charge and under the same terms and conditions, for Talk America for its end users. Where BellSouth charges its retail customers for Enhanced White Pages Listings, BellSouth shall publish such listings under the same terms and conditions to Talk America for its Customers at the applicable wholesale discount set forth in Attachment 1.

5.8 Directories. BellSouth or its agent shall make available White Pages directories and Yellow Pages directories to Talk America subscribers at no charge and in the same manner as BellSouth provides directories to its own end users or as specified in a separate BAPCO agreement.

6. Bona Fide Request/New Business Request Process for Further Unbundling

6.1 BellSouth shall, upon request of Talk America, provide to Talk America access to its network elements at any technically feasible point for the provision of Talk America's telecommunications service where such access is necessary and failure to provide access would impair the ability of Talk America to provide services that it seeks to offer. Any request by Talk America for access to a network element, interconnection option, or for the provisioning of any service or product that is not already available shall be treated as a Bona Fide Request/New Business Request (BFR/NBR), and shall be submitted to BellSouth pursuant to the BFR/NBR process as described in Attachment 11 to this Agreement.

6.2 Talk America shall submit any BFR/NBR in writing to Talk America’s Account Manager. The BFR/NBR shall specifically identify the requested service date, technical requirements, space requirements and/or such specifications that clearly define the request such that BellSouth has sufficient information to analyze and prepare a response. The BFR/NBR also shall include Talk America’s designation of the request as being (i) pursuant to the Act or (ii) pursuant to the needs of the business.

6.3 Upon request, a service or product requested by another carrier through the BFR/NBR process shall be available pursuant to an amendment to Talk America on the same rates, terms and conditions as set forth in the other carrier’s amendment for such service or product.

7. Local Dialing Parity

BellSouth shall provide local dialing parity as described in the Act and required by FCC rules, regulations and policies. Talk America End Users shall not have to dial any greater number of digits than BellSouth End Users to complete the same call. In addition, Talk America End Users shall experience at least the same service

quality as BellSouth End Users in terms of post-dial delay, call completion rate and transmission quality.

8. Court Ordered Requests for Call Detail Records and Other Subscriber Information

8.1 Subpoenas Directed to BellSouth. Where BellSouth provides resold services or local switching for Talk America, BellSouth shall respond to subpoenas and court ordered requests delivered directly to BellSouth for the purpose of providing call detail records when the targeted telephone numbers belong to Talk America end users. Billing for such requests will be generated by BellSouth and directed to the law enforcement agency initiating the request. BellSouth shall maintain such information for Talk America end users for the same length of time it maintains such information for its own end users.

8.2 Subpoenas Directed to Talk America. Where BellSouth is providing to Talk America telecommunications services for resale or providing to Talk America the local switching function, then Talk America agrees that in those cases where Talk America receives subpoenas or court ordered requests regarding targeted telephone numbers belonging to Talk America end users, and where Talk America does not have the requested information, Talk America will advise the law enforcement agency initiating the request to redirect the subpoena or court ordered request to BellSouth for handling in accordance with 7.1 above.

8.3 In all other instances, where either Party receives a request for information involving the other Party's end user, the Party receiving the request will advise the law enforcement agency initiating the request to redirect such request to the other Party.

9. Liability and Indemnification

9.1 BellSouth Liability. BellSouth shall take financial responsibility for its own actions in causing, or its lack of action in preventing, unbillable or uncollectible Talk America revenues.

9.2 Liability for Acts or Omissions of Third Parties. Neither BellSouth nor Talk America shall be liable for any act or omission of another telecommunications company providing a portion of the services provided under this Agreement.

9.3 Limitation of Liability.

9.3.1 With respect to any claim or suit, whether based in contract, tort or any other theory of legal liability, by Talk America, any Talk America customer or by any other person or entity, for damages associated with any of the services provided by BellSouth pursuant to or in connection with this Agreement, including but not limited to the installation, provision, preemption, termination, maintenance, repair or restoration of service, and

subject to the provisions of the remainder of this Part A, BellSouth's liability shall be limited to an amount equal to the proportionate charge for the service provided pursuant to this Agreement for the period during which the service was affected. With respect to any claim or suit, whether based in contract, tort or any other theory of legal liability, by BellSouth, any BellSouth customer or by any other person or entity, for damages associated with any of the services provided by Talk America pursuant to or in connection with this Agreement, including but not limited to the installation, provision, preemption, termination, maintenance, repair or restoration of service, and subject to the provisions of the remainder of this Part A, Talk America 's liability shall be limited to an amount equal to the proportionate charge for the service provided pursuant to this Agreement for the period during which the service was affected. Notwithstanding the foregoing, claims for damages by Talk America, any Talk America customer or any other person or entity resulting from the gross negligence or willful misconduct of BellSouth and claims for damages by Talk America resulting from the failure of BellSouth to honor in one or more material respects any one or more of the material provisions of this Agreement shall not be subject to such limitation of liability. Likewise, claims for damages by BellSouth, any BellSouth customer or any other person or entity resulting from the gross negligence or willful misconduct of Talk America and claims for damages by BellSouth resulting from the failure of Talk America to honor in one or more material respects any one or more of the material provisions of this Agreement shall not be subject to such limitation of liability.

9.3.2 Limitations in Tariffs. Subject to the provisions of 9.3.1, a Party may, in its sole discretion, provide in its tariffs and contracts with its Customer and third parties that relate to any service, product or function provided or contemplated under this Agreement, that to the maximum extent permitted by Applicable Law, such Party shall not be liable to Customer or third Party for (i) any Loss relating to or arising out of this Agreement, whether in contract, tort or otherwise, that exceeds the amount such party would have charged that applicable person for the service, product or function that gave rise to such Loss and (ii) Consequential Damages. To the extent that a Party elects not to place in its tariffs or contracts such limitations of liability, and the other Party incurs a Loss as a result thereof, such Party shall indemnify and reimburse the other Party for that portion of the Loss that would have been limited had the first Party included in its tariffs and contracts the limitations of liability that such other Party included in its own tariffs at the time of such Loss.

9.3.3 Neither BellSouth nor Talk America shall be liable for damages to the other’s terminal location, POI or other company’s customers’ premises resulting from the furnishing of a service, including, but not limited to, the installation and removal of equipment or associated wiring, except to the extent caused by a company’s negligence or willful misconduct or by a company’s failure to properly ground a local loop after disconnection.

9.3.4 Under no circumstance shall a Party be responsible or liable for indirect, incidental, or consequential damages, including, but not limited to, economic loss or lost

business or profits, damages arising from the use or performance of equipment or software, or the loss of use of software or equipment, or accessories attached thereto, delay, error, or loss of data. In connection with this limitation of liability, each Party recognizes that the other Party may, from time to time, provide advice, make recommendations, or supply other analyses related to the Services, or facilities described in this Agreement, and, while each Party shall use diligent efforts in this regard, the Parties acknowledge and agree that this limitation of liability shall apply to provision of such advice, recommendations, and analyses.

9.4 Indemnification for Certain Claims. BellSouth and Talk America providing services, their affiliates and their parent company, shall be indemnified, defended and held harmless by each other against any claim, loss or damage arising from the receiving company's use of the services provided under this Agreement pertaining to (1) claims for libel, slander, invasion of privacy or copyright infringement arising from the content of the receiving company's own communications, or (2) any claim, loss or damage claimed by the other company's customer arising from one company's use or reliance on the other company's services, actions, duties, or obligations arising out of this Agreement; provided that in the event of a claim arising under this Section 9.4(2), to the extent any claim, loss or damage is caused by the gross negligence or willful misconduct of the providing party, the receiving Party shall have no obligation to indemnify, defend or hold harmless the providing Party hereunder, subject to the other terms of this Section 9.

9.5 Disclaimer. EXCEPT AS SPECIFICALLY PROVIDED TO THE CONTRARY IN THIS AGREEMENT, NEITHER PARTY MAKES ANY REPRESENTATIONS OR WARRANTIES TO THE OTHER PARTY CONCERNING THE SPECIFIC QUALITY OF ANY SERVICES, OR FACILITIES PROVIDED UNDER THIS AGREEMENT. THE PARTIES DISCLAIM, WITHOUT LIMITATION, ANY WARRANTY OR GUARANTEE OF MERCHANTABILITY OR FITNESS FOR A PARTICULAR PURPOSE, ARISING FROM COURSE OF PERFORMANCE, COURSE OF DEALING, OR FROM USAGES OF TRADE.

9.6 Talk America and BellSouth will work cooperatively to minimize fraud associated with third-number billed calls, calling card calls, or any other services related to this Agreement. The Parties fraud minimization procedures are to be cost effective and implemented so as not to unduly burden or harm one Party as compared to the other.

10. Intellectual Property Rights and Indemnification

10.1 No License. No patent, copyright, trademark or other proprietary right is licensed, granted or otherwise transferred by this Agreement. Talk America is strictly prohibited from any use, including but not limited to in sales, in marketing or advertising of telecommunications services, of any BellSouth name, service mark or trademark. Notwithstanding the foregoing, Talk America may use BellSouth's name (1) in response to inquiries of customers or potential customers regarding the

source of the underlying service or the identity of repair or service technicians under this Agreement, and (2) Talk America may use the BellSouth name in comparative advertising so long as the reference is truthful and factual, does not relate to the source of the underlying service and does not imply any agency relationship, partnership, endorsement, sponsorship or affiliation by or with BellSouth.

10.2 Ownership of Intellectual Property. Any intellectual property which originates from or is developed by a Party shall remain the exclusive property of that Party. Except for a limited license to use patents or copyrights to the extent necessary for the Parties to use any facilities or equipment (including software) or to receive any service solely as provided under this Agreement, no license in patent, copyright, trademark or trade secret, or other proprietary or intellectual property right now or hereafter owned, controlled or licensable by a Party, is granted to the other Party or shall be implied or arise by estoppel. It is the responsibility of each Party to ensure at no additional cost to the other Party that it has obtained any necessary licenses in relation to intellectual property of third Parties used in its network that may be required to enable the other Party to use any facilities or equipment (including software), to receive any service, or to perform its respective obligations under this Agreement.

10.3 Indemnification. The Party providing a service pursuant to this Agreement will defend the Party receiving such service or data provided as a result of such service against claims of infringement arising solely from the use by the receiving Party of such service in the manner contemplated under this Agreement and will indemnify the receiving Party for any damages awarded based solely on such claims in accordance with Section 9 preceding.

10.4 Claim of Infringement. In the event that use of any facilities or equipment (including software), becomes, or in the reasonable judgment of the Party who owns the affected network is likely to become, the subject of a claim, action, suit, or proceeding based on intellectual property infringement, then said Party shall promptly and at its sole expense and sole option, but subject to the limitations of liability set forth below:

10.4.1 modify or replace the applicable facilities or equipment (including software) while maintaining form and function, or

10.4.2 obtain a license sufficient to allow such use to continue.

10.4.3 In the event 10.4.1 or 10.4.2 are commercially unreasonable, then said Party may, terminate, upon reasonable notice, this contract with respect to use of, or services provided through use of, the affected facilities or equipment (including software), but solely to the extent required to avoid the infringement claim.

10.5 Exception to Obligations. Neither Party's obligations under this Section shall apply to the extent the infringement is caused by: (i) modification of the facilities or

equipment (including software) by the indemnitee; (ii) use by the indemnitee of the facilities or equipment (including software) in combination with equipment or facilities (including software) not provided or authorized by the indemnitor, provided the facilities or equipment (including software) would not be infringing if used alone; (iii) conformance to specifications of the indemnitee which would necessarily result in infringement; or (iv) continued use by the indemnitee of the affected facilities or equipment (including software) after being placed on notice to discontinue use as set forth herein.

10.6 Exclusive Remedy. The foregoing shall constitute the Parties' sole and exclusive remedies and obligations with respect to a third party claim of intellectual property infringement arising out of the conduct of business under this Agreement.

10.7 Dispute Resolution. Any claim arising under this Section 10 shall be excluded from the dispute resolution procedures set forth in Section 13 and shall be brought in a court of competent jurisdiction.

11. Proprietary and Confidential Information

11.1 Proprietary and Confidential Information. It may be necessary for BellSouth and Talk America, each as the "Discloser," to provide to the other Party, as "Recipient," certain proprietary and confidential information (including trade secret information) including but not limited to technical, financial, marketing, staffing and business plans and information, strategic information, proposals, request for proposals, specifications, drawings, maps, prices, costs, costing methodologies, procedures, processes, business systems, software programs, techniques, customer account data, call detail records and like information. This proprietary and confidential information also includes, but is not limited to all orders for Services and Network Elements placed by either Party, and information that would constitute customer proprietary network information and recorded usage data, whether disclosed by the Discloser or otherwise acquired by the Recipient in the course of the performance of this Agreement. (This proprietary and confidential information is collectively the "Information"). All such Information conveyed in writing or other tangible form shall be clearly marked with a confidential or proprietary legend. Notwithstanding the foregoing, the Parties agree that all orders for Services and Network Elements and information that would constitute customer proprietary network information and recorded usage data is proprietary and confidential information and as such no confidential or proprietary legend is required. Information conveyed orally by the Discloser to Recipient shall be designated as proprietary and confidential at the time of such oral conveyance, shall be reduced to writing by the Discloser within forty-five (45) days thereafter, and shall be clearly marked with a confidential or proprietary legend. All information provided to Recipient by Discloser shall be treated as proprietary and confidential.

11.2 Use and Protection of Information. Recipient shall use the Information solely for the purpose(s) of performing this Agreement, and Recipient shall protect

Information from any use, distribution or disclosure except as permitted hereunder. Recipient will use the same standard of care to protect Information as Recipient uses to protect its own similar confidential and proprietary information, but not less than a reasonable standard of care. Recipient may disclose Information solely to the Authorized Representatives of the Recipient who (a) have a substantive need to know such Information in connection with performance of the Agreement; (b) have been advised of the confidential and proprietary nature of the Information; and (c) have personally agreed in writing to protect from unauthorized disclosure all confidential and proprietary information, of whatever source, to which they have access in the course of their employment. Unless otherwise agreed, Recipient shall not permit employees or agents of Recipient with end user marketing, product development, or any other non-Discloser purpose, to have access to Information under any circumstances, and in no event shall the Information be used to create a lead or other information base for a "winback" sales program. "Authorized Representatives" are the officers, directors and employees of Recipient and its Affiliates, as well as Recipient's and its Affiliates' consultants, contractors, counsel and agents.

11.3 Exceptions. Discloser's Information does not include: (a) any information publicly disclosed by Discloser; (b) any information Discloser in writing authorizes Recipient to disclose without restriction; (c) any information already lawfully known to Recipient at the time it is disclosed by the Discloser, without an obligation to keep confidential; or (d) any information Recipient lawfully obtains from any source other than Discloser, provided that such source lawfully disclosed and/or independently developed such information. If Recipient is required to provide Information to any court or government agency pursuant to written court order, subpoena, regulation or process of law, Recipient must first provide Discloser with prompt written notice of such requirement and cooperate with Discloser to appropriately protect against or limit the scope of such disclosure. To the fullest extent permitted by law, Recipient will continue to protect as confidential and proprietary all Information disclosed in response to a written court order, subpoena, regulation or process of law.

11.4 Ownership, Copying & Return of Information. Information remains at all times the property of Discloser. Recipient may make tangible or electronic copies, notes, summaries or extracts of Information only as necessary for use as authorized herein. All such tangible or electronic copies, notes, summaries or extracts must be marked with the same confidential and proprietary notice as appears on the original. Upon Discloser's request, all or any requested portion of the Information (including, but not limited to, tangible and electronic copies, notes, summaries or extracts of any information) will be promptly returned to Discloser or destroyed according to Discloser's request, and Recipient will provide Discloser with written certification stating that such Information has been returned or destroyed.

11.5 Recipient agrees to use the Information solely for the purposes of negotiations pursuant to 47 U.S.C. 251 or in performing its obligations under this Agreement and for no other entity or purpose, except as may be otherwise agreed to in writing

by the Parties. Nothing herein shall prohibit Recipient from providing information requested by the Federal Communications Commission or a state regulatory agency with jurisdiction over this matter, or to support a request for arbitration or an allegation of failure to negotiate in good faith, provided Recipient simultaneously notifies the other Party and provides the other Party with a copy of the information.

11.6 Recipient agrees not to publish or use the Information for any advertising, sales promotions, press releases, or publicity matters that refer either directly or indirectly to the Information or to the Discloser or any of its affiliated companies.

11.7 The disclosure of Information neither grants nor implies any license to the Recipient under any trademark, patent, copyright, or application which is now or may hereafter be owned by the Discloser.

11.8 Equitable Relief. Recipient acknowledges and agrees that any breach or threatened breach of this Agreement is likely to cause Discloser irreparable harm for which money damages may not be an appropriate or sufficient remedy. Recipient therefore agrees that Discloser or its Affiliates, as the case may be, are entitled to receive injunctive or other equitable relief to remedy or prevent any breach or threatened breach of this Agreement. Such remedy is not the exclusive remedy for any breach or threatened breach of this Agreement, but is in addition to all other rights and remedies available at law or in equity.

11.9 Survival of Confidentiality Obligations. The Parties' rights and obligations under this Section 11 shall survive and continue in effect until two (2) years after the expiration or termination date of this Agreement with regard to all Information exchanged during the term of this Agreement. Thereafter, the Parties' rights and obligations hereunder survive and continue in effect with respect to any Information that is a trade secret under applicable law.

11.10 Assignments

11.10.1 Any assignment by either Party to any non-affiliated entity of any right, obligation or duty, or of any other interest hereunder, in whole or in part, without the prior written consent of the other Party shall be void. Such consent will not be unreasonably withheld. A Party may assign this Agreement or any right, obligation, duty or other interest hereunder to an Affiliate of the Party without the consent of the other Party; provided, however, that the assigning Party shall notify the other Party in writing of such assignment thirty (30) days prior to the Effective Date thereof and, provided further, if the assignee is an assignee of Talk America, the assignee must provide evidence of Commission CLEC certification. The Parties shall amend this Agreement to reflect such assignments and shall work cooperatively to implement any changes required due to such assignment. All obligations and duties of any Party under this Agreement shall be binding on all successors in interest and assigns of such Party. No assignment or delegation

hereof shall relieve the assignor of its obligations under this Agreement in the event that the assignee fails to perform such obligations.

12. **Escalation Procedures**

Each Party hereto shall provide the other party hereto with the names and telephone numbers or pagers of their respective managers up to the Vice Presidential level for the escalation of unresolved matters relating to their performance of their duties under this Agreement. Each Party shall supplement and update such information as necessary to facilitate prompt resolution of such matters. Each Party further agrees to establish an automatic internal escalation procedure relating to unresolved disputes arising under this Agreement.

13. Resolution of Disputes

13.1 Except as otherwise provided herein, any dispute, controversy or claim (individually and collectively, a "Dispute") arising under this Agreement shall be resolved in accordance with the procedures set forth in this Section. In the event of a Dispute between the Parties relating to this Agreement, and upon the written request of either Party, each of the Parties shall appoint within ten (10) calendar days after a Party's receipt of such request, a designated representative who has authority to settle the Dispute and who is at a higher level of management than the persons with direct responsibility for administration of this Agreement. The designated representatives shall meet as often as they reasonably deem necessary in order to discuss the Dispute and negotiate in good faith in an effort to resolve such Dispute. The specific format for such discussions will be left to the discretion of the designated representatives; however, all reasonable requests for relevant information made by one Party to the other Party shall be honored. If the Parties are unable to resolve issues related to a Dispute within thirty (30) days after a Party's request is made for appointment of designated representatives as set forth above, either Party may seek relief from the appropriate state regulatory agency of any Dispute upon which the Parties hereto are unable to reach agreement or may seek such other relief to which it is entitled to under Applicable Law. Notwithstanding the foregoing, in no event shall the Parties permit the pendency of a Dispute to disrupt service to any Talk America or BellSouth End User, unless such service is damaging or interfering with customer services or network operations.

13.2 The Parties agree that this Section does not prevent either Party from seeking temporary equitable remedies, including temporary restraining orders. A request by a Party to a court or a regulatory authority for interim measures or equitable relief shall not be deemed a waiver of the obligation to comply with the Dispute Resolution provisions.

14. Taxes

14.1 Definition. For purposes of this Section, the terms "taxes" and "fees" shall include but not limited to federal, state or local sales, use, excise, gross receipts or other

taxes or tax-like fees of whatever nature and however designated (including tariff surcharges and any fees, charges or other payments, contractual or otherwise, for the use of public streets or rights of way, whether designated as franchise fees or otherwise) imposed, or sought to be imposed, on or with respect to the services furnished hereunder or measured by the charges or payments therefore, excluding any taxes levied on income.

14.2 Taxes and Fees Imposed Directly On Either Providing Party or Purchasing Party.

14.2.1 Taxes and fees imposed on the providing Party, which are not permitted or required to be passed on by the providing Party to its customer, shall be borne and paid by the providing Party.

14.2.2 Taxes and fees imposed on the purchasing Party, which are not required to be collected and/or remitted by the providing Party, shall be borne and paid by the purchasing Party.

14.3 Taxes and Fees Imposed on Purchasing Party But Collected And Remitted By Providing Party.

14.3.1 Taxes and fees imposed on the purchasing Party shall be borne by the purchasing Party, even if the obligation to collect and/or remit such taxes or fees is placed on the providing Party.

14.3.2 To the extent permitted by applicable law, any such taxes and/or fees shall be shown as separate items on applicable billing documents between the Parties. Notwithstanding the foregoing, the purchasing Party shall remain liable for any such taxes and fees regardless of whether they are actually billed by the providing Party at the time that the respective service is billed.

14.3.3 If the purchasing Party determines that in its opinion any such taxes or fees are not payable, the providing Party shall not bill such taxes or fees to the purchasing Party if the purchasing Party provides written certification, reasonably satisfactory to the providing Party, stating that it is exempt or otherwise not subject to the tax or fee, setting forth the basis therefor, and satisfying any other requirements under applicable law. If any authority seeks to collect any such tax or fee that the purchasing Party has determined and certified not to be payable, or any such tax or fee that was not billed by the providing Party, the purchasing Party may contest the same in good faith, at its own expense. In any such contest, the purchasing Party shall promptly furnish the providing Party with copies of all filings in any proceeding, protest, or legal challenge, all rulings issued in connection therewith, and all correspondence between the purchasing Party and the taxing authority.

14.3.4 In the event that all or any portion of an amount sought to be collected must be paid in order to contest the imposition of any such tax or fee, or to avoid the existence of a lien on the assets of the providing Party during the pendency of such contest, the purchasing Party shall be responsible for such payment and shall be entitled to the benefit of any refund or recovery.

14.3.5 If it is ultimately determined that any additional amount of such a tax or fee is due to the imposing authority, the purchasing Party shall pay such additional amount, including any interest and penalties thereon.

14.3.6 Notwithstanding any provision to the contrary, the purchasing Party shall protect, indemnify and hold harmless (and defend at the purchasing Party's expense) the providing Party from and against any such tax or fee, interest or penalties thereon, or other charges or payable expenses (including reasonable attorney fees) with respect thereto, which are incurred by the providing Party in connection with any claim for or contest of any such tax or fee.

14.3.7 Each Party shall notify the other Party in writing of any assessment, proposed assessment or other claim for any additional amount of such a tax or fee by a taxing authority; such notice to be provided, if possible, at least ten (10) days prior to the date by which a response, protest or other appeal must be filed, but in no event later than thirty (30) days after receipt of such assessment, proposed assessment or claim.

14.4 Taxes and Fees Imposed on Providing Party But Passed On To Purchasing Party.

14.4.1 Taxes and fees imposed on the providing Party, which are permitted or required to be passed on by the providing Party to its customer, shall be borne by the purchasing Party.

14.4.2 To the extent permitted by applicable law, any such taxes and/or fees shall be shown as separate items on applicable billing documents between the Parties. Notwithstanding the foregoing, the purchasing Party shall remain liable for any such taxes and fees regardless of whether they are actually billed by the providing Party at the time that the respective service is billed.

14.4.3 If the purchasing Party disagrees with the providing Party's determination as to the application or basis for any such tax or fee, the Parties shall consult with respect to the imposition and billing of such tax or fee. Notwithstanding the foregoing, the providing Party shall retain ultimate responsibility for determining whether and to what extent any such taxes or fees are applicable, and the purchasing Party shall abide by such determination and pay such taxes or fees to the providing Party. The providing Party shall further retain ultimate responsibility for determining whether and how to contest the imposition of such taxes and fees; provided, however, that any such contest undertaken at the request of the purchasing Party shall be at the purchasing Party's expense.

14.4.4 In the event that all or any portion of an amount sought to be collected must be paid in order to contest the imposition of any such tax or fee, or to avoid the existence of a lien on the assets of the providing Party during the pendency of such contest, the purchasing Party shall be responsible for such payment and shall be entitled to the benefit of any refund or recovery.

14.4.5 If it is ultimately determined that any additional amount of such a tax or fee is due to the imposing authority, the purchasing Party shall pay such additional amount, including any interest and penalties thereon.

14.4.6 Notwithstanding any provision to the contrary, the purchasing Party shall protect indemnify and hold harmless (and defend at the purchasing Party's expense) the providing Party from and against any such tax or fee, interest or penalties thereon, or other reasonable charges or payable expenses (including reasonable attorney fees) with respect thereto, which are incurred by the providing Party in connection with any claim for or contest of any such tax or fee.

14.4.7 Each Party shall notify the other Party in writing of any assessment, proposed assessment or other claim for any additional amount of such a tax or fee by a taxing authority; such notice to be provided, if possible, at least ten (10) days prior to the date by which a response, protest or other appeal must be filed, but in no event later than thirty (30) days after receipt of such assessment, proposed assessment or claim.

14.5 Mutual Cooperation. In any contest of a tax or fee by one Party, the other Party shall cooperate fully by providing records, testimony and such additional information or assistance as may reasonably be necessary to pursue the contest. Further, the other Party shall be reimbursed for any reasonable and necessary out-of-pocket copying and travel expenses incurred in assisting in such contest.

15. Network Maintenance and Management

15.1 The Parties shall work cooperatively to implement this Agreement. The Parties shall exchange appropriate information (e.g., maintenance contact numbers, network information, information required to comply with law enforcement and other security agencies of the Government, etc.) as reasonably required to implement and perform this Agreement.

15.2 Each Party hereto shall design, maintain and operate their respective networks as necessary to ensure that the other Party hereto receives service quality which is consistent with generally accepted industry standards at least at parity with the network service quality given to itself, its Affiliates, its End Users.

15.3 Neither Party shall use any service or facility provided under this Agreement in a manner that impairs the quality of service to other telecommunications carriers' or to either Party's End Users. Each Party will provide the other Party notice of any such impairment at the earliest practicable time.

15.4 BellSouth agrees to provide Talk America prior notice consistent with applicable FCC rules and the Act of changes in the information necessary for the transmission and routing of services using BellSouth's facilities or networks, as well as other changes that affect the interoperability of those respective facilities and networks. This Agreement is not intended to limit BellSouth's ability to upgrade its network through the incorporation of new equipment, new software or otherwise so long as

such upgrades are not inconsistent with BellSouth's obligations to Talk America under the terms of this Agreement.

16. Force Majeure

16.1 In the event performance of this Agreement, or any obligation hereunder, is either directly or indirectly prevented, restricted, or interfered with by reason of fire, flood, earthquake or like acts of God, wars, acts of terriorism, revolution, civil commotion, explosion, acts of public enemy, embargo, acts of the government in its sovereign capacity, labor difficulties, including without limitation, strikes, slowdowns, picketing, or boycotts, unavailability of equipment from vendor, changes requested by Customer, or any other circumstances beyond the reasonable control and without the fault or negligence of the Party affected, the Party affected, upon giving prompt notice to the other Party, shall be excused from such performance on a day-to-day basis to the extent of such prevention, restriction, or interference (and the other Party shall likewise be excused from performance of its obligations on a day-to-day basis until the delay, restriction or interference has ceased); provided however, that the Party so affected shall use diligent efforts to avoid or remove such causes of non-performance and both Parties shall proceed whenever such causes are removed or cease.

17. Adoption of Agreements

17.1 BellSouth shall make available, pursuant to 47 USC § 252 and the FCC rules and regulations regarding such availability, to Talk America any interconnection, service, or network element provided under any other agreement filed and approved pursuant to 47 USC § 252 in that respective state. The Parties shall adopt all rates, terms and conditions concerning such other interconnection, service or network element and any other rates, terms and conditions that are legitimately related to or were negotiated in exchange for or in conjunction with the interconnection, service or network element being adopted. The rates, terms and conditions adopted by the Parties shall be effective as of the date the Agreement is amended. The adopted interconnection, service, or network element and agreement shall apply to the same states as such other agreement. The term of the adopted agreement or provisions shall expire on the same date as set forth in the agreement which was adopted.

18. Modification of Agreement

18.1 If Talk America changes its name or makes changes to its company structure or identity due to a merger, acquisition, transfer or any other reason, it is the responsibility of Talk America to notify BellSouth of said change and request that an amendment to this Agreement, if necessary, be executed to reflect said change.

18.2 No modification, amendment, supplement to, or waiver of the Agreement or any of its provisions shall be effective and binding upon the Parties unless it is made in writing and duly signed by the Parties.

18.3 In the event that any effective legislative, regulatory, judicial or other legal action materially affects any material terms of this Agreement, or the ability of Talk America or BellSouth to perform any material terms of this Agreement, Talk America or BellSouth may, on fifteen (15) days' written notice require that such terms be renegotiated, and the Parties shall renegotiate in good faith such mutually acceptable new terms as may be required. In the event that such new terms are not renegotiated within forty-five (45) days after such notice, the Dispute shall be referred to the Dispute Resolution procedure set forth in this Agreement. In the event that the Parties reach agreement as to the new terms consistent with the above, the Parties agree to make the effective date of such amendment consistent with the effective date specified in the action or, if the action is silent, then as negotiated between the Parties on a case by case basis.

18.4 Notwithstanding anything to the contrary in this Agreement, this Agreement shall not be amended or modified after the expiration date hereof as set forth in Section 2 above.

19. Non-waiver of Legal Rights

19.1 Execution of this Agreement by either Party does not confirm or infer that the executing Party agrees with any decision(s) issued pursuant to the Act and the consequences of those decisions on specific language in this Agreement. Neither Party waives its rights to appeal or otherwise challenge any such decision(s) and each Party reserves all of its rights to pursue any and all legal and/or equitable remedies, including appeals of any such decision(s).

20. Indivisibility

20.1 The Parties intend that this Agreement be indivisible and nonseverable, and each of the Parties acknowledges that it has assented to all of the covenants and promises in this Agreement as a single whole and that all of such covenants and promises, taken as a whole, constitute the essence of the contract. Without limiting the generality of the foregoing, each of the Parties acknowledges that any provision by BellSouth of Collocation Space (or space pursuant to Adjacent Arrangement) under this Agreement is solely for the purpose of facilitating the provision of other services under this Agreement and that neither Party would have contracted with respect to the provisioning of Collocation Space (or space pursuant to Adjacent Arrangement) if the covenants and promises of the other Party with respect to the other services provided for under this Agreement had not been made. The Parties further acknowledge that this Agreement is intended to constitute a single transaction, that the obligations of the Parties under this Agreement are interdependent, and that payment obligations under this Agreement are intended to be recoupable against other payment obligations under this Agreement.

21. Waivers

21.1 A failure or delay of either Party to enforce any of the provisions hereof, to exercise any option which is herein provided, or to require performance of any of the provisions hereof shall in no way be construed to be a waiver of such provisions or options, and each Party, notwithstanding such failure, shall have the right thereafter to insist upon the performance of any and all of the provisions of this Agreement.

22. Governing Law

22.1 To the extent any provisions of this Agreement are subject to the jurisdiction of the FCC, applicable federal rules and regulations shall govern those provisions. To the extent any provisions of this Agreement are subject to the jurisdiction of the state Commission, applicable Commission rules and regulations shall govern those provisions. All other provisions of this Agreement shall be governed by, and construed and enforced in accordance with, the laws of the State of Georgia, without regard to its conflict of laws principles.

23. Arm's Length Negotiations

23.1 This Agreement was executed after arm's length negotiations between the undersigned Parties and reflects the conclusion of the undersigned that this Agreement is in the best interests of all Parties.

24. Notices

24.1 Every notice, consent, approval, or other communications required or contemplated by this Agreement shall be in writing and shall be delivered by hand, by overnight courier or by US mail postage prepaid, address to:

BellSouth Telecommunications, Inc.

Account Team
600 North 19th Street
Birmingham, Alabama 35203

and

General Attorney - COU
Suite 4300
675 W. Peachtree St.
Atlanta, GA 30375

Talk America

Senior Vice President, Operations
12020 Sunrise Valley Drive
Suite 250
Reston, VA 20191

and

General Counsel
6805 Route 202
New Hope, PA 18938

and

Director, Carrier Relations
12001 Science Drive, Suite 130
Orlando, FL 32826

or at such other address as the intended recipient previously shall have designated by written notice to the other Party.

24.2 Where specifically required, notices shall be by certified or registered mail. Unless otherwise provided in this Agreement, notice by mail shall be effective on the date it is officially recorded as delivered by return receipt or equivalent, and in the absence of such record of delivery, it shall be presumed to have been delivered the fifth day, or next business day after the fifth day, after it was deposited in the mails.

24.3 Notwithstanding the foregoing, BellSouth shall provide Talk America 45-day advance notice, to the extent that BellSouth is afforded 45 days notice from the Commission, via Internet posting of price changes, changes to the terms and conditions of services available for resale per Commission Orders. To the extent that revisions occur between the time BellSouth notifies Talk America of changes under this Agreement and the time the changes are scheduled to be implemented, BellSouth will immediately notify Talk America of such revisions consistent with its internal notification process. Talk America may not hold BellSouth responsible for any cost incurred as a result of such revisions, unless such costs are incurred as a result of BellSouth's intentional misconduct. Talk America may not utilize any notice given under this subsection concerning a service to market resold offerings of that service in advance of BellSouth. BellSouth will also post changes to business processes and policies, notices of new service offerings, and changes to service offerings not requiring an amendment to this Agreement, notices required to be posted to BellSouth's website, and any other information of general applicability to CLECs.

25. Rule of Construction

25.1 No rule of construction requiring interpretation against the drafting Party hereof shall apply in the interpretation of this Agreement.

26. Headings of No Force or Effect

26.1 The headings of Articles and Sections of this Agreement are for convenience of reference only, and shall in no way define, modify or restrict the meaning or interpretation of the terms or provisions of this Agreement.

27. Multiple Counterparts

27.1 This Agreement may be executed in multiple counterparts, each of which shall be deemed an original, but all of which shall together constitute but one and the same document.

28. Implementation of Agreement

28.1 If Talk America is a facilities based provider or a facilities based and resale provider, this section shall apply. Within 60 days of the execution of this Agreement, the Parties may adopt a schedule for the implementation of the Agreement. The schedule shall state with specificity time frames for submission of including but not limited to, network design, interconnection points, collocation arrangement requests, pre-sales testing and full operational time frames for the business and residential markets.

29. Filing of Agreement

29.1 Upon execution of this Agreement it shall be filed with the appropriate state regulatory agency pursuant to the requirements of Section 252 of the Act, and the Parties shall share equally any filing fees therefor. If the regulatory agency imposes any filing or public interest notice fees regarding the filing or approval of the Agreement, Talk America shall be responsible for publishing the required notice and the publication and/or notice costs shall be borne by Talk America. Notwithstanding the foregoing, this Agreement shall not be submitted for approval by the appropriate state regulatory agency unless and until such time as Talk America is duly certified as a local exchange carrier in such state, except as otherwise required by a state Commission.

30. **Compliance with Applicable Law**

30.1 Each Party shall comply at its own expense with Applicable Law.

31. Necessary Approvals

31.1 Each Party shall be responsible for obtaining and keeping in effect all approvals from, and rights granted by, governmental authorities, building and property owners, other carriers, and any other persons that may be required in connection with the performance of its obligations under this Agreement. Each Party shall reasonably cooperate with the other Party in obtaining and maintaining any

required approvals and rights for which such Party is responsible.

32. Good Faith Performance

32.1 Each Party shall act in good faith in its performance under this Agreement and, in each case in which a Party's consent or agreement is required or requested hereunder, such Party shall not unreasonably withhold or delay such consent or agreement.

33. Nonexclusive Dealings

33.1 This Agreement does not prevent either Party from providing or purchasing services to or from any other person nor, except as provided in Section 252(i) of the Act, does it obligate either Party to provide or purchase any services (except insofar as the Parties are obligated to provide access to Interconnection, services and Network Elements to Talk America as a requesting carrier under the Act).

34. Rate True-Up

34.1 This section applies to Local Interconnection and/or Unbundled Network Elements and Other Services rates that are interim or expressly subject to true-up under this Agreement**.**

34.2 The interim prices for Network Elements and Other Services and Local Interconnection shall be subject to true-up according to the following procedures:

34.3 The interim prices shall be trued-up, either up or down, based on final prices determined either by further agreement between the Parties, or by a final order (including any appeals) of the Commission which final order meets the criteria of (3) below. The Parties shall implement the true-up by comparing the actual volumes and demand for each item, together with interim prices for each item, with the final prices determined for each item. Each Party shall keep its own records upon which the true-up can be based, and any final payment from one Party to the other shall be in an amount agreed upon by the Parties based on such records. In the event of any disagreement as between the records or the Parties regarding the amount of such true-up, the Parties agree that the body having jurisdiction over the matter shall be called upon to resolve such differences, or the Parties may mutually agree to submit the matter to the Dispute Resolution process in accordance with the provisions of Section 13 of the General Terms and Conditions and Attachment 1 of this Agreement.

34.4 The Parties may continue to negotiate toward final prices, but in the event that no such Agreement is reached within nine (9) months, either Party may petition the Commission to resolve such disputes and to determine final prices for each item. Alternatively, upon mutual agreement, the Parties may submit the matter to the Dispute Resolution Process set forth in Section 13 of the General Terms and Conditions and Attachment 1 of this Agreement, so long as they file the resulting

Agreement with the Commission as a "negotiated Agreement" under Section 252(e) of the Act.

34.5 An effective order of the Commission that forms the basis of a true-up shall be based upon cost studies submitted by either or both Parties to the Commission and shall be binding upon BellSouth and Talk America specifically or upon all carriers generally, such as a generic cost proceeding.

35. Survival

35.1 The Parties' obligations under this Agreement which by their nature are intended to continue beyond the termination or expiration of this Agreement shall survive the termination or expiration of this Agreement.

36. Establishment of Service

In accordance with FCC Slamming Liability Rules, BellSouth will reestablish service with the appropriate local service provider and will assess Talk America as the CLEC initiating the alleged unauthorized change, the appropriate nonrecurring charges, as set forth in Section A4 of the General Subscriber Service Tariff.

37. Entire Agreement

37.1 This Agreement and its Attachments, incorporated herein by this reference, sets forth the entire understanding and supersedes prior interconnection agreements between the Parties relating to the subject matter contained herein and merges all prior discussions between them. Any orders placed under prior agreements between the Parties shall be governed by the terms of this Agreement. Neither Party shall be bound by any definition, condition, provision, representation, warranty, covenant or promise other than as expressly stated in this Agreement or as is contemporaneously or subsequently set forth in writing and executed by a duly authorized officer or representative of the Party to be bound thereby.

37.2 This Agreement includes Attachments with provisions for the following:

Resale
Network Elements and Other Services
Network Interconnection
Collocation
Access to Numbers and Number Portability
Pre-Ordering, Ordering and Provisioning, Maintenance and Repair
Billing and Billing Accuracy Certification
Rights-of-Way, Conduits and Pole Attachments
Performance Measurements
BellSouth Disaster Recovery Plan
Bona Fide Request/New Business Request Process

Talk America shall be permitted, at its discretion, to configure these services with respect to any manner necessary to provide telephone exchange or exchange access service to Talk America End Users.

37.3 **The following services are included as options for purchase by Talk America. Talk America may elect to purchase said services by written request to its Account Manager if applicable:**

Optional Daily Usage File (ODUF)
Enhanced Optional Daily Usage File (EODUF)
Access Daily Usage File (ADUF)
Line Information Database (LIDB) Storage
Centralized Message Distribution Service (CMDS)
Calling Name (CNAM)
LNP Data Base Query Service

38. Relationship of Parties

This Agreement shall not establish, be interpreted as establishing, or be used by either Party to establish, or to represent their relationship as any form of agency, partnership or joint venture. Neither Party shall have any authority to bind the other or to act as an agent for the other unless written authority, separate from this Agreement, is provided. Nothing in this Agreement shall be construed as providing for the sharing of profits or losses arising out of the efforts of either or both of the Parties. Nothing herein shall be construed as making either Party responsible or liable for the obligations and undertakings of the other Party.

39. Third Party Beneficiaries

This Agreement does not provide, and shall not be construed to provide, third parties with any benefit, remedy, claim, liability, reimbursement, cause of action, or other privilege.

40. Cooperation on Preventing End User Fraud

The Parties agree to cooperate fully with one another to investigate, minimize, prevent, and take corrective action in cases of fraud.

41. Independent Contractors

Each Party is an independent contractor, and has and hereby retains the right to exercise full control of and supervision over its own performance of its obligations under this Agreement, and retains full control over the employment, direction, compensation and discharge of its employees assisting in the performance of such obligations. Each Party shall be solely responsible for all matters relating to payment of such employees, including compliance with social security taxes, withholding taxes and all other regulations governing such matters. Subject to the

limitations on liability and except as otherwise provided in this Agreement, each Party shall be responsible for (i) its own acts and performance of all obligations imposed by Applicable Law in connection with its activities, legal status and property, real or personal and, (ii) the acts of its own Affiliates, employees, agents and contractors during the performance of the Party's obligations hereunder.

42. Subcontracting

If any obligation is performed through a subcontractor, each Party shall remain fully responsible for the performance of this Agreement in accordance with its terms, including any obligations either Party performs through subcontractors, and each Party shall be solely responsible for payments due the Party's subcontractors. No contract, subcontract or other Agreement entered into by either Party with any third party in connection with the provision of any facilities or services provided herein, shall provide for any indemnity, guarantee or assumption of liability by, or other obligation of, the other Party to this Agreement with respect to such arrangement, except as consented to in writing by the other Party. No subcontractor shall be deemed a third party beneficiary for any purposes under this Agreement. Any subcontractor who gains access to CPNI or Confidential Information covered by this Agreement shall be required by the subcontracting Party to protect such CPNI or Confidential Information to the same extent that the subcontracting Party is required to protect the same under the terms of this Agreement.

43. Customer Inquiries and Disparagement

43.1 Each Party shall refer all questions regarding the other Party's services or products directly to the other Party at a telephone number specified by that Party.

43.2 Each Party shall ensure that each of their representatives who receive inquiries regarding the other Party's services: (i) provide the numbers described in Section 43.1 to callers who inquire about the other Party's services or products, and (ii) do not in any way disparage or discriminate against the other Party or its products or services.

43.3 Neither Party shall disparage the other Party when speaking with a customer or potential customer.

44. Labor Relations

Each Party shall be responsible for labor relations with its own employees. Each Party agrees to notify the other Party as soon as practicable whenever such Party has knowledge that a labor dispute concerning its employees is delaying or threatens to delay such Party's timely performance of its obligations under this Agreement and shall endeavor to minimize impairment of service to the other Party (by using its management personnel to perform work or by other means) in the event of a labor dispute to the extent permitted by Applicable Law.

45. Compliance with the Communications Law Enforcement Act of 1994 ("CALEA")

Each Party represents and warrants that any equipment, facilities or services provided to the other Party under this Agreement comply with CALEA to the extent applicable. Each Party shall indemnify and hold the other Party harmless from any and all penalties imposed upon the other Party for such other Party's noncompliance, and shall at the non-compliant Party's sole cost and expense, modify or replace any equipment, facilities or services provided to the other Party under this Agreement to ensure that such equipment, facilities and services fully comply with CALEA.

IN WITNESS WHEREOF, the Parties have executed this Agreement the day and year written below.

BellSouth Telecommunications, Inc.	**The Other Phone Company, Inc.** **d/b/a Access One Communications** **The Other Phone Company, Inc.** **d/b/a Talk America Inc. (NOT in Florida)** **Talk America Inc.**
Signature on File	Signature on File
Signature	Signature
C. W. Boltz	Aloysius T. Laun IV
Name	Name
Managing Director	EVP – General Counsel
Title	Title
5-13-02	5-10-02
Date	Date

Attachment 1

Resale

Table of Contents

1. Discount Rates **3**

2. Definition of Terms **3**

3. General Provisions **4**

4. BellSouth's Provision of Services to Talk America **8**

5. Maintenance of Services **9**

6. Establishment of Service **10**

7. Payment And Billing Arrangements ..... Error! Bookmark not defined.

8. Discontinuance of Service **11**

9. Line Information Database (LIDB) **11**

10. RAO Hosting **12**

11. Optional Daily Usage File (ODUF) **12**

12. Enhanced Optional Daily Usage File (EODUF) **12**

Resale Restrictions **Exhibit A**

Line Information Database (LIDB) Storage Agreemt **Exhibit B**

Optional Daily Usage File (ODUF) **Exhibit C**

Enhanced Option Daily Usage File (EODUF) **Exhibit D**

Resale Discounts and Rates **Exhibit E**

RESALE

1. Discount Rates

1.1 The discount rates applied to Talk America purchases of BellSouth Telecommunications Services for the purpose of resale shall be as set forth in Exhibit E. Such discounts have been determined by the applicable Commission to reflect the costs avoided by BellSouth when selling a service for wholesale purposes.

1.2 The telecommunications services available for purchase by Talk America for the purposes of resale to Talk America's End Users shall be available at BellSouth's tariffed rates less the discount set forth in Exhibit E to this Agreement and subject to the exclusions and limitations set forth in Exhibit A to this Agreement. Subject to the exclusions and limitations set forth in Exhibit A to this Agreement, if BellSouth provide telecommunications services at retail to subscribers who are not telecommunications carriers in a manner other than by tariff, then, subject to effective and applicable FCC and Commission rules and orders, these services shall also be available to Talk America at the retail offered rates less the discount set forth in Exhibit E to this Agreement and subject to the exclusions and limitations set forth in Exhibit A to this Agreement.

2. Definition of Terms

2.1 COMPETITIVE LOCAL EXCHANGE COMPANY (CLEC) means a telephone company certificated by the Commission to provide local exchange service within BellSouth's franchised area.

2.2 CUSTOMER OF RECORD means the entity responsible for placing application for service; requesting additions, rearrangements, maintenance or discontinuance of service; payment in full of charges incurred such as non-recurring, monthly recurring, toll, directory assistance, etc.

2.3 DEPOSIT means assurance provided by a customer in the form of cash, surety bond or bank letter of credit to be held by BellSouth.

2.4 END USER means the ultimate user of the Telecommunications Service.

2.5 END USER CUSTOMER LOCATION means the physical location of the premises where an End User makes use of the telecommunications services.

2.6 NEW SERVICES means functions, features or capabilities that are not currently offered by BellSouth. This includes packaging of existing services or combining a new function, feature or capability with an existing service.

2.7 RESALE means an activity wherein a certificated CLEC, such as Talk America, subscribes to the telecommunications services of BellSouth and then offers those telecommunications services to the public.

3. General Provisions

3.1 All of the negotiated rates, terms and conditions set forth in this Attachment pertain to the resale of BellSouth's retail telecommunications services and other services specified in this Attachment. Subject to effective and applicable FCC and Commission rules and orders, BellSouth shall make available to Talk America for resale those telecommunications services BellSouth provides at retail to subscribers who are not telecommunications carriers.

3.1.1 When Talk America provides Resale service in a cross boundary area (areas that are part of the local serving area of another state's exchange) the rates, regulations and discounts for the tariffing state will apply. Billing will be from the serving state.

3.1.2 In Tennessee, if Talk America provides its own operator services and directory services, the discount shall be 21.56%. Talk America must provide written notification to BellSouth within 30 days prior to providing its own operator services and directory services to qualify for the higher discount rate of 21.56%.

3.2 Talk America may purchase resale services from BellSouth for their own use in operating their business. The resale discount will apply to those services under the following conditions:

3.2.1 Talk America must resell services to other End Users.

3.2.2 Talk America must order services through resale interfaces, i.e., the Local Carrier Service Center (LCSC) and/or appropriate Resale Account Teams pursuant this Agreement.

3.2.3 Talk America cannot be a competitive local exchange telecommunications company for the single purpose of selling to themselves.

3.3 Talk America will be the customer of record for all services purchased from BellSouth. Except as specified herein, BellSouth will take orders from, bill and receive payment from Talk America for said services.

3.4 Talk America will be BellSouth's single point of contact for all services purchased pursuant to this Agreement. BellSouth shall have no contact with the End User except to the extent provided for herein. Each Party shall provide to the other a nation wide (50 states) toll-free contact number for purposes of repair and maintenance.

3.5 BellSouth will continue to bill the End User for any services that the End User specifies it wishes to receive directly from BellSouth. BellSouth maintains the right to serve directly any End User within the service area of Talk America. BellSouth will continue to market directly its own telecommunications products and services and in doing so may establish independent relationships with End Users of Talk America. Neither Party shall interfere with the right of any person or entity to obtain service directly from the other Party.

3.5.1 When a subscriber of Talk America or BellSouth elects to change his/her carrier to the other Party, both Parties agree to release the subscriber's service to the other Party concurrent with the due date of the service order, which shall be established based on the standard interval for the subscriber's requested service as set forth in BellSouth Product and Services Interval Guide.

3.5.2 Talk America will refrain from contacting subscribers for winback purposes that Talk America knows have placed or whose selected carrier has placed on their behalf an order to change his/her service provider from Talk America to BellSouth until such time that the order for service has been completed. BellSouth will refrain from contacting subscribers for winback purposes who have placed or whose selected carrier has placed on their behalf an order to change his/her service provider from BellSouth to Talk America until such time that the order for service has been completed.

3.6 Current telephone numbers may normally be retained by the End User and are assigned to the service furnished. However, neither Party nor the End User has a property right to the telephone number or any other call number designation associated with services furnished by BellSouth, and no right to the continuance of service through any particular central office. BellSouth reserves the right to change such numbers, or the central office designation associated with such numbers, or both, whenever BellSouth deems it necessary to do so in the conduct of its business and in accordance with BellSouth practices and procedures on a nondiscriminatory basis.

3.7 For the purpose of the resale of BellSouth's telecommunications services by Talk America, BellSouth will provide Talk America with on line access for reservation to telephone numbers on a first come first served basis. Such reservations of telephone numbers, on a pre-ordering basis shall be for a period of ninety (90) days. Talk America acknowledges that there may be instances where there is a shortage of telephone numbers in a particular Common Language Location Identifier Code (CLLIC); and in such instances, BellSouth may request that Talk America cancel its reservations of numbers. Talk America shall reasonably comply with such request. BellSouth shall make all such requests on a nondiscriminatory basis.

3.8 Further, upon Talk America's request, and for the purpose of the resale of BellSouth's telecommunications services by Talk America, BellSouth will reserve

up to 100 telephone numbers per CLLIC, for Talk America's sole use. Such telephone number reservations shall be valid for ninety (90) days from the reservation date. Talk America acknowledges that there may be instances where there is a shortage of telephone numbers in a particular CLLIC and in such instances BellSouth shall use its best efforts to reserve for a ninety (90) day period a sufficient quantity of Talk America's reasonable need in that particular CLLIC. Assignment, reservation and use of telephone numbers shall be governed by applicable FCC rules and regulations.

3.9 Service is furnished subject to the condition that it will not be used for any unlawful purpose.

3.10 Service will be discontinued, upon prior notice to Talk America where practicable, if any law enforcement agency advises that the service being used is in violation of the law.

3.11 BellSouth can refuse service, upon notice to Talk America of the grounds, when it has grounds to believe that service will be used in violation of the law.

3.13 If Talk America or its End Users utilize a BellSouth resold telecommunications service in a manner other than that for which the service was originally intended as described in BellSouth's retail tariffs, Talk America has the responsibility to notify BellSouth. BellSouth will only provision and maintain said service consistent with the terms and conditions of the tariff describing said service.

3.14 Facilities and/or equipment utilized by BellSouth to provide service to Talk America remain the property of BellSouth.

3.15 BellSouth provides electronic access to customer record information. Access is provided through the Local Exchange Navigation System (LENS) and the Telecommunications Access Gateway (TAG). Customer Record Information includes but is not limited to, customer specific information in Customer Records Information System (CRIS) and Regional Street Address Guide (RSAG). In addition, Talk America shall provide to BellSouth access to customer record information including electronic access where available. Otherwise, upon request by BellSouth Talk America shall provide paper copies of customer record information within a reasonable period of time. Customer Record Information is equivalent to but not limited to the type of customer specific information contained in CRIS and RSAG. The Parties agree not to view, copy, or otherwise obtain access to the customer record information of any customer without that customer's permission, and further agrees that Talk America and BellSouth will obtain access to customer record information only in strict compliance with applicable laws, rules, or regulations of the State in which the service is provided.

3.16 Operational Support Systems (OSS)

3.16.1 BellSouth has developed and made available the following mechanized systems by which Talk America may submit LSRs electronically: Local Exchange Navigation System (LENS), Electronic Data Interchange (EDI) and Telecommunications Access Gateway (TAG). To the extent required by FCC rules, BellSouth shall make available to Talk America for purchase any additional mechanized OSS interfaces that are introduced by BellSouth. All costs incurred by BellSouth to develop and implement operational interfaces shall be recovered from CLECs who utilize the interfaces.

3.16.2 LSRs submitted by means of one of these interactive interfaces will incur an OSS electronic charge as set forth in Exhibit E to this Agreement. An individual LSR will be identified for billing purposes by its Purchase Order Number (PON). LSRs submitted by means other than one of these interactive interfaces (mail, fax, courier, etc.) will incur a a manual order charge as set forth in Exhibit E to this Agreement. Supplements or clarifications to a previously billed LSR will not incur another OSS charge. Talk America shall only be charged for LSRs submitted by or on behalf of Talk America.

3.16.3 Denial/Restoral OSS Charge. In the event Talk America_provides a list of customers to be denied and restored, rather than an LSR , each location on the list will require a separate PON and therefore will be billed as one LSR per location.

3.16.4 Cancellation OSS Charge. Talk America will incur an OSS charge for an accepted LSR that is later canceled.

3.16.5 No manual ordering charges shall apply to local service requests submitted by Talk America when BellSouth's existing electronic interfaces normally utilized by Talk America are unavailable for reasons other than scheduled maintenance or other scheduled activities for which advance notification is required and provided by BellSouth.

3.17 Where available to BellSouth's End Users, BellSouth shall provide the following telecommunications services at a discount to allow for voice mail services**:**

- Message Waiting Indicator ("MWI"), stutter dialtone and message waiting light feature capabilities
- Call Forward Busy Line ("CF/B")
- Call Forward Don't Answer ("CF/DA")
- Simplified Message Desk Interface - Enhanced ("SMDI-E")
- Simplified Message Desk Interface ("SMDI")

Further, BellSouth messaging services set forth in BellSouth's Messaging Service Information Package shall be made available for resale without the wholesale discount.

3.19 BellSouth shall provide branding for, or shall unbrand, voice mail services for Talk America per the Bona Fide Request/New Business Request process as set forth in Section 6 of the General Terms and Conditions.

3.20 BellSouth's Inside Wire Maintenance Service Plan is available for resale at rates, terms and conditions as set forth by BellSouth and without the wholesale discount.

3.21 In the event Talk America acquires an End User whose service is provided pursuant to a BellSouth Special Assembly, BellSouth shall make available to Talk America that Special Assembly at the wholesale discount at Talk America's option. Talk America shall be responsible for all terms and conditions of such Special Assembly including but not limited to termination liability if applicable.

3.22 BellSouth shall provide 911/E911 for Talk America customers in the same manner that it is provided to BellSouth customers. BellSouth shall provide and validate Talk America customer information to the Public Safety Answering Point (PSAP). BellSouth shall use its service order process to update and maintain, on the same schedule that it uses for its customers, the Talk America customer service information in the ALI/DMS (Automatic Location Identification/Location Information) databases used to support 911/E911 services.

3.23 BellSouth shall bill, and Talk America shall pay, the End User line charge associated with implementing Number Portability as set forth in BellSouth's FCC No. 1 tariff. This charge is not subject to the wholesale discount.

3.24 Pursuant to 47 CFR Section 51.617, BellSouth will bill to Talk America, and Talk America shall pay, End User common line charges identical to the End User common line charges BellSouth bills its End Users.

3.25 Orders to switch services "as is" shall be treated as a change of service and shall not be treated as a disconnection and subsequent reconnection of service.

3.26 BellSouth shall provide Talk America notification of disconnects, updated and delivered once daily, via web posting.

4. BellSouth's Provision of Services to Talk America

4.1 Resale of BellSouth services shall be as follows:

4.1.1 The resale of telecommunications services shall be limited to users and uses conforming to the class of service restrictions.

4.1.2 Hotel and Hospital PBX services are the only telecommunications services available for resale to Hotel/Motel and Hospital End Users, respectively. Similarly, Access Line Service for Customer Provided Coin Telephones is the only local service available for resale to Payphone Service Provider (PSP) customers. Shared Tenant Service customers can only be sold those local exchange access services available in BellSouth's A23 Shared Tenant Service Tariff in the states of Florida, Georgia, North Carolina and South Carolina, and in A27 in the states of Alabama, Kentucky, Louisiana, Mississippi and Tennessee.

4.1.3 BellSouth reserves the right to periodically audit services purchased by Talk America to establish authenticity of use. Such audit shall not occur more than once in a calendar year. Talk America shall make any and all records and data available to BellSouth or BellSouth's auditors on a reasonable basis. BellSouth shall bear the cost of said audit. Any information provided by Talk America for purposes of such audit shall be deemed Confidential Information pursuant to the General Terms and Conditions of this Agreement.

4.2 Subject to Exhibit A hereto and the terms of this Agreement, resold services can only be used in the same manner as specified in BellSouth's Tariffs. Resold services are subject to the same terms and conditions as are specified for such services when furnished to an individual End User of BellSouth. Specific features (e.g. a usage allowance per month) shall not be aggregated across multiple resold services.

4.3 Talk America may resell services only within the specific service area as defined in its certificate of operation approved by the Commission.

4.4 If Talk America cancels an order for resold services, any costs incurred by BellSouth in conjunction with provisioning of such order will be recovered in accordance with BellSouth's General Subscriber Services Tariffs and Private Line Services Tariffs.

4.5 Telephone numbers transmitted via any resold service feature are intended solely for the use of the End User of the feature. Resale of this information is prohibited.

4.6 Talk America reserves the right to orderResale services and/or UNE services to provide End User service to a single End User location. BellSouth shall not restrict Talk America from making such combinations.

5. Maintenance of Services

5.1 Talk America will adopt and adhere to the standards contained in the applicable BellSouth Operational Understanding regarding maintenance of service. The BellSouth Operational Understanding can be accessed via the internet @ http://www.interconnection.bellsouth.com.

5.2 Services resold pursuant to this Attachment and BellSouth's General Subscriber Service Tariff and Private Line Service Tariff and facilities and equipment provided by BellSouth shall be maintained by BellSouth.

5.3 Talk America or its End Users may not rearrange, move, disconnect, remove or attempt to repair any facilities owned by BellSouth except with the written consent of BellSouth.

5.4 Talk America accepts responsibility to notify BellSouth of situations that arise that may result in a service problem.

5.5 Talk America will be BellSouth's single point of contact for all repair calls on behalf of Talk America's End Users. The parties agree to provide one another with toll-free contact numbers for such purposes.

5.6 Talk America will contact the appropriate repair centers in accordance with procedures established by BellSouth.

5.7 For all repair requests, Talk America shall adhere to BellSouth's prescreening guidelines prior to referring the trouble to BellSouth.

5.8 BellSouth will bill Talk America for handling troubles that are found not to be in BellSouth's network pursuant to its standard time and material charges. The standard time and material charges will be no more than what BellSouth charges to its retail customers for the same services.

5.9 BellSouth reserves the right to contact Talk America's End Users, if deemed necessary, for maintenance purposes.

6. Establishment of Service

6.1 After receiving certification as a local exchange company from the appropriate regulatory agency, Talk America will provide the appropriate BellSouth service center the necessary documentation to enable BellSouth to establish a master account for Talk America's resold services. Such documentation shall include the Application for Master Account, proof of authority to provide telecommunications services, an Operating Company Number ("OCN") assigned by the National Exchange Carriers Association ("NECA") and a tax exemption certificate, if applicable. When necessary deposit requirements are met, as described in Attachment 7, BellSouth will begin taking orders for the resale of service. The Parties acknowledge that Talk America has met these obligations.

6.1.2 Service orders will be in a standard format designated by BellSouth.

6.1.3 Talk America shall provide to BellSouth a blanket letter of authorization ("LOA") certifying that Talk America will have End User authorization prior to viewing the End User's customer service record or switching the End User's service. BellSouth

will not require End User confirmation prior to establishing service for Talk America's End User customer.

6.1.4 BellSouth will accept a request directly from the End User for conversion of the End User's service from Talk America to BellSouth or will accept a request from another CLEC for conversion of the End User's service from Talk America to such other CLEC. Upon completion of the conversion BellSouth will notify Talk America that such conversion has been completed within five (5) days of service order completion.

7. Discontinuance of Service

7.1 The procedures for discontinuing service to an End User are as follows:

7.1.1 BellSouth will deny service to Talk America's End User on behalf of, and at the request of, Talk America. Upon restoration of the End User's service, restoral charges will apply and will be the responsibility of Talk America.

7.1.2 At the request of Talk America, BellSouth will disconnect a Talk America End User customer in the same manner it processes disconnects for BellSouth's own End Users.

7.1.3 All requests by Talk America for denial or disconnection of an End User for nonpayment must be in writing or other electronic means.

7.1.4 Talk America will be made solely responsible for notifying the End User of the proposed disconnection of the service.

7.1.5 BellSouth will continue to process calls made to the Annoyance Call Center and will advise Talk America when it is determined that annoyance calls are originated from one of its End User's locations. BellSouth shall be indemnified, defended and held harmless by Talk America and/or the End User against any claim, loss or damage arising from providing this information to Talk America. It is the responsibility of Talk America to take the corrective action necessary with its End Users who make annoying calls. (Failure to do so will result in BellSouth's disconnecting the End User's service.)

8. Line Information Database (LIDB)

8.1 BellSouth will store in its Line Information Database (LIDB) records relating to service only in the BellSouth region. The LIDB Storage Agreement is included in this Attachment as Exhibit B.

8.2 BellSouth will provide LIDB Storage upon written request to Talk America's Account Manager stating a requested activation date.

9. RAO Hosting

9.1 RAO Hosting is not required for resale in the BellSouth region.

10. Optional Daily Usage File (ODUF)

10.1 The Optional Daily Usage File (ODUF) Agreement with terms and conditions is included in this Attachment as Exhibit C. Rates for ODUF are as set forth in Attachment 7 of this Agreement.

10.2 BellSouth will provide ODUF service upon written request to its Account Manager stating a requested activation date.

11. Enhanced Optional Daily Usage File (EODUF)

11.1 The Enhanced Optional Daily Usage File (EODUF) service Agreement with terms and conditions is included in this Attachment as Exhibit D. Rates for EODUF are as set forth in Attachment 7 of this Agreement.

11.2 BellSouth will provide EODUF service upon written request to its Account Manager stating a requested activation date.

EXCLUSIONS AND LIMITATIONS ON SERVICES AVAILABLE FOR RESALE (Note 5)

	Type of Service	AL		FL		GA		KY		LA		MS		NC		SC		TN	
		Resale	Discount	Resale	Discount	Resale	Discount	Resale	Discount	Resale	Discount	Resale	Discount	Resale	Discount	Resale	Discount	Resale	Discount
1	Grandfathered Services (Note 1)	Yes	Yes	Yes	Yes	Yes	Yes	Yes	Yes	Yes	Yes	Yes	Yes	Yes	Yes	Yes	Yes	Yes	Yes
2	Promotions - > 90 Days(Note 2)	Yes	Yes	Yes	Yes	Yes	Yes	Yes	Yes	Yes	Yes	Yes	Yes	Yes	Yes	Yes	Yes	Yes	Note 3
3	Promotions - ≤ 90 Days (Note 2)	Yes	No	Yes	No	Yes	No	Yes	No	Yes	No	Yes	No	Yes	No	Yes	No	Yes	No
4	Lifeline/Link Up Services	Yes	Yes	Yes	Yes	Yes	Yes	Yes	Note 4	Yes	Yes	Yes	Yes	Yes	Yes	Yes	Yes	Yes	Yes
5	911/E911 Services	Yes	Yes	Yes	Yes	Yes	Yes	Yes	Yes	No	No	Yes	Yes	Yes	Yes	Yes	Yes	Yes	Yes
6	N11 Services	Yes	Yes	Yes	Yes	Yes	Yes	No	No	No	No	Yes	Yes	Yes	Yes	No	No	Yes	Yes
7	MemoryCall®Service	Yes	No	Yes	No	Yes	No	Yes	No	Yes	No	Yes	No	Yes	No	Yes	No	Yes	No
8	Mobile Services	Yes	No	Yes	No	Yes	No	Yes	No	Yes	No	Yes	No	Yes	No	Yes	No	Yes	No
9	Federal Subscriber Line Charges	Yes	No	Yes	No	Yes	No	Yes	No	Yes	No	Yes	No	Yes	No	Yes	No	Yes	No
10	Non-RecurCharges	Yes	Yes	Yes	Yes	Yes	Yes	Yes	Yes	Yes	Yes	Yes	Yes	Yes	Yes	Yes	Yes	Yes	No
11	End User Line Chg-Number Portability	Yes	No	Yes	No	Yes	No	Yes	No	Yes	No	Yes	No	Yes	No	Yes	No	Yes	No
12	Public Telephone Access Svc(PTAS)	Yes	Yes	Yes	Yes	Yes	Yes	Yes	Yes	Yes	Yes	Yes	Yes	Yes	Yes	Yes	No	Yes	Yes
13	Inside Wire Maint Service Plan	Yes	No	Yes	No	Yes	No	Yes	No	Yes	No	Yes	No	Yes	No	Yes	No	Yes	No

	Applicable Notes:
1.	**Grandfathered services** can be resold only to existing subscribers of the grandfathered service.
2.	Where available for resale, **promotions** will be made available only to End Users who would have qualified for the promotion had it been provided by BellSouth directly.
3.	In Tennessee, long-term **promotions** (offered for more than ninety (90) days) may be obtained at one of the following rates:
	(a) the stated tariff rate, less the wholesale discount;
	(b) the promotional rate (the promotional rate offered by BellSouth will not be discounted further by the wholesale discount rate)
4.	**Lifeline/Link Up** services may be offered only to those subscribers who meet the criteria that BellSouth currently applies to subscribers of these services as set forth in Sections A3 and A4 of the BellSouth General Subscriber Services Tariff.
5.	Some of BellSouth's local exchange and toll telecommunications services are not available in certain central offices and areas.

LINE INFORMATION DATA BASE (LIDB)

RESALE STORAGE AGREEMENT

I. Definitions (from Addendum)

A. Billing number - a number used by BellSouth for the purpose of identifying an account liable for charges. This number may be a line or a special billing number.

B. Line number - a ten-digit number assigned by BellSouth that identifies a telephone line associated with a resold local exchange service, or with a SPNP arrangement.

C. Special billing number - a ten-digit number that identifies a billing account established by BellSouth in connection with a resold local exchange service or with a SPNP arrangement.

D. Calling Card number - a billing number plus PIN number assigned by BellSouth.

E. PIN number - a four digit security code assigned by BellSouth which is added to a billing number to compose a fourteen digit calling card number.

F. Toll billing exception indicator - associated with a billing number to indicate that it is considered invalid for billing of collect calls or third number calls or both, by Talk America.

G. Billed Number Screening - refers to the activity of determining whether a toll billing exception indicator is present for a particular billing number.

H. Calling Card Validation - refers to the activity of determining whether a particular calling card number exists as stated or otherwise provided by a caller.

I. Billing number information - information about billing number or Calling Card number as assigned by BellSouth and toll billing exception indicator provided to BellSouth by Talk America.

II. General

A. This Agreement sets forth the terms and conditions pursuant to which BellSouth agrees to store in its LIDB certain information at the request of Talk America and pursuant to which BellSouth, its LIDB customers and Talk America shall have access to such information. In addition, this Agreement sets forth the terms and conditions for Talk America's provision of billing number information to BellSouth for inclusion

in BellSouth's LIDB. Talk America understands that BellSouth provides access to information in its LIDB to various telecommunications service providers pursuant to applicable tariffs and agrees that information stored at the request of Talk America, pursuant to this Agreement, shall be available to those telecommunications service providers. The terms and conditions contained herein shall hereby be made a part of this Interconnection/Resale Agreement upon notice to Talk America's account team to activate this LIDB Storage Agreement. The General Terms and Conditions of the Interconnection/Resale Agreement shall govern this LIDB Storage Agreement. The terms and conditions contained in the attached Addendum is hereby made a part of this LIDB Storage Agreement as if fully incorporated herein.

B. BellSouth will provide responses to on-line, call-by-call queries to billing number information for the following purposes:

1. Billed Number Screening

   BellSouth is authorized to use the billing number information to determine whether Talk America has identified the billing number as one that should not be billed for collect or third number calls.

2. Calling Card Validation

   BellSouth is authorized to validate a 14-digit Calling Card number where the first 10 digits are a line number or special billing number assigned by BellSouth, and where the last four digits (PIN) are a security code assigned by BellSouth.

3. Fraud Control

   BellSouth will provide seven days per week, 24-hours per day, fraud monitoring on Calling Cards, bill-to-third and collect calls made to numbers in BellSouth's LIDB, provided that such information is included in the LIDB query. BellSouth will establish fraud alert thresholds and will notify Talk America of fraud alerts so that Talk America may take action it deems appropriate.

III. Responsibilities of the Parties

A. BellSouth will administer all data stored in the LIDB, including the data provided by Talk America pursuant to this Agreement, in the same manner as BellSouth's data for BellSouth's End User customers. BellSouth shall not be responsible to Talk America for any lost revenue which may result from BellSouth's administration of the LIDB pursuant to its established practices and procedures as they exist and as they may be changed by BellSouth in its sole discretion from time to time.

B. Billing and Collection Customers

BellSouth currently has in effect numerous billing and collection agreements with various interexchange carriers and billing clearing houses and as such these billing and collection customers ("B&C Customers") query BellSouth's LIDB to determine whether to accept various billing options from End Users. Until such time as BellSouth implements in its LIDB and its supporting systems the means to differentiate Talk America's data from BellSouth's data, the following shall apply:

(1) Talk America will accept responsibility for telecommunications services billed by BellSouth for its B&C Customers for Talk America's End User accounts which are resident in LIDB pursuant to this Agreement. Talk America authorizes BellSouth to place such charges on Talk America's bill from BellSouth and shall pay all such charges, including, but are not limited to, collect and third number calls.

(2) Charges for such services shall appear on a separate BellSouth bill page identified with the name of the B&C Customers for which BellSouth is billing the charge.

(3) Talk America shall have the responsibility to render a billing statement to its End Users for these charges, but Talk America shall pay BellSouth for the charges billed regardless of whether Talk America collects from Talk America's End Users.

(4) BellSouth shall have no obligation to become involved in any disputes between Talk America and B&C Customers. BellSouth will not issue adjustments for charges billed on behalf of any B&C Customer to Talk America. It shall be the responsibility of Talk America and the B&C Customers to negotiate and arrange for any appropriate adjustments.

C. SPNP ARRANGEMENTS

1. BellSouth will include billing number information associated with resold exchange lines or SPNP arrangements in its LIDB. Talk America will request any toll billing exceptions via the Local Service Request (LSR) form used to order resold exchange lines, or the SPNP service request form used to order SPNP arrangements.

2. Under normal operating conditions, BellSouth shall include the billing number information in its LIDB upon completion of the service order establishing either the resold local exchange service or the SPNP arrangement, provided that BellSouth shall not be held responsible for any delay or failure in performance to the extent such delay or failure is caused by circumstances or conditions beyond BellSouth's reasonable control. BellSouth will store in its LIDB an unlimited volume of the working telephone numbers associated with either the resold local exchange lines or the SPNP arrangements. For resold local exchange lines or for SPNP arrangements, BellSouth will issue line-based calling cards only in the name of Talk America. BellSouth will not issue line-based calling cards in the name of Talk America's individual End Users. In the event that Talk America wants to

include calling card numbers assigned by Talk America in the BellSouth LIDB, a separate agreement is required.

IV. Fees for Service and Taxes

A. Talk America will not be charged a fee for storage services provided by BellSouth to Talk America, as described in this LIDB Resale Storage Agreement.

B. Sales, use and all other taxes (excluding taxes on BellSouth's income) determined by BellSouth or any taxing authority to be due to any federal, state or local taxing jurisdiction with respect to the provision of the service set forth herein will be paid by Talk America in accordance with the tax provisions set forth in the General Terms and Conditions of this Agreement.

Optional Daily Usage File

1. Upon written request from Talk America, BellSouth will provide the Optional Daily Usage File (ODUF) service to Talk America pursuant to the terms and conditions set forth in this section.

2. Talk America shall furnish all relevant information required by BellSouth for the provision of the Optional Daily Usage File.

3. The Optional Daily Usage Feed will contain billable messages that were carried over the BellSouth Network and processed in the BellSouth Billing System, but billed to a Talk America customer.

   Charges for delivery of the Optional Daily Usage File will appear on Talk America's monthly bills. The charges are as set forth in Exhibit E to this Attachment.

4. The Optional Daily Usage Feed will contain both rated and unrated messages. All messages will be in the standard Alliance for Telecommunications Industry Solutions (ATIS) EMI record format.

5. Messages that error in Talk America's billing system will be the responsibility of Talk America. If, however, Talk America should encounter significant volumes of errored messages that prevent processing by Talk America within its systems, BellSouth will work with Talk America to determine the source of the errors and the appropriate resolution.

6. The following specifications shall apply to the Optional Daily Usage Feed.

6.1 Usage To Be Transmitted

6.1.1 The following messages recorded by BellSouth will be transmitted to Talk America:

- Message recording for per use/per activation type services (examples: Three Way Calling, Verify, Interrupt, Call Return, etc.)
- Measured billable Local
- Directory Assistance messages
- IntraLATA Toll
- WATS and 800 Service

- N11
- Information Service Provider Messages
- Operator Services Messages
- Operator Services Message Attempted Calls (UNE only)
- Credit/Cancel Records
- Usage for Voice Mail Message Service

6.1.2 Rated Incollects (originated in BellSouth and from other companies) can also be on Optional Daily Usage File. Rated Incollects will be intermingled with BellSouth recorded rated and unrated usage. Rated Incollects will not be packed separately.

6.1.3 BellSouth will perform duplicate record checks on records processed to Optional Daily Usage File. Any duplicate messages detected will be deleted and not sent to Talk America.

6.1.4 In the event that Talk America detects a duplicate on Optional Daily Usage File they receive from BellSouth, Talk America will drop the duplicate message (Talk America will not return the duplicate to BellSouth).

6.2 Physical File Characteristics

6.2.1 The Optional Daily Usage File will be distributed to Talk America via an agreed medium with CONNECT:Direct being the preferred transport method. The Daily Usage Feed will be a variable block format (2476) with an LRECL of 2472. The data on the Daily Usage Feed will be in a non-compacted EMI format (175 byte format plus modules). It will be created on a daily basis (Monday through Friday except holidays). Details such as dataset name and delivery schedule will be addressed during negotiations of the distribution medium. There will be a maximum of one dataset per workday per OCN.

6.2.2 Data circuits (private line or dial-up) will be required between BellSouth and Talk America for the purpose of data transmission. Where a dedicated line is required, Talk America will be responsible for ordering the circuit, overseeing its installation and coordinating the installation with BellSouth. Talk America will also be responsible for any charges associated with this line. Equipment required on the BellSouth end to attach the line to the mainframe computer and to transmit successfully ongoing will be negotiated on a case by case basis. Where a dial-up facility is required, dial circuits will be installed in the BellSouth data center by BellSouth and the associated charges assessed to Talk America. Additionally, all message toll charges associated with the use of the dial circuit by Talk America will be the responsibility of Talk America. Associated equipment on the BellSouth end, including a modem, will be negotiated on

a case by case basis between the Parties. All equipment, including modems and software, that is required on Talk America end for the purpose of data transmission will be the responsibility of Talk America.

6.3 Packing Specifications

6.3.1 A pack will contain a minimum of one message record or a maximum of 99,999 message records plus a pack header record and a pack trailer record. One transmission can contain a maximum of 99 packs and a minimum of one pack.

6.3.2 The OCN, From RAO, and Invoice Number will control the invoice sequencing. The From RAO will be used to identify to Talk America which BellSouth RAO is sending the message. BellSouth and Talk America will use the invoice sequencing to control data exchange. BellSouth will be notified of sequence failures identified by Talk America and resend the data as appropriate.

THE DATA WILL BE PACKED USING ATIS EMI RECORDS.

6.4 Pack Rejection

6.4.1 Talk America will notify BellSouth within one business day of rejected packs (via the mutually agreed medium). Packs could be rejected because of pack sequencing discrepancies or a critical edit failure on the Pack Header or Pack Trailer records (i.e. out-of-balance condition on grand totals, invalid data populated). Standard ATIS EMI Error Codes will be used. Talk America will not be required to return the actual rejected data to BellSouth. Rejected packs will be corrected and retransmitted to Talk America by BellSouth.

6.5 Control Data

Talk America will send one confirmation record per pack that is received from BellSouth. This confirmation record will indicate Talk America received the pack and the acceptance or rejection of the pack. Pack Status Code(s) will be populated using standard ATIS EMI error codes for packs that were rejected by Talk America for reasons stated in the above section.

6.6 Testing

6.6.1 Upon request from Talk America, BellSouth shall send test files to Talk America for the Optional Daily Usage File. The Parties agree to review and discuss the file's content and/or format. For testing of usage results, BellSouth shall request that Talk America set up a production (LIVE) file. The live test may consist of Talk America's employees making test calls for the types of services Talk America requests on the Optional Daily Usage File. These test calls are logged by Talk America, and the logs are provided to BellSouth. These logs will be used to verify the files. Testing will be completed within 30 calendar days from the date on which the initial test file was sent.

Enhanced Optional Daily Usage File

1. Upon written request from Talk America, BellSouth will provide the Enhanced Optional Daily Usage File (EODUF) service to Talk America pursuant to the terms and conditions set forth in this section. EODUF will only be sent to existing ODUF subscribers who request the EODUF option.

2. Talk America shall furnish all relevant information required by BellSouth for the provision of the Enhanced Optional Daily Usage File.

3. The Enhanced Optional Daily Usage File (EODUF) will provide usage data for local calls originating from resold Flat Rate Business and Residential Lines.

4. Charges for delivery of the Enhanced Optional Daily Usage File will appear on Talk America's monthly bills. The charges are as set forth in Exhibit E to this Attachment.

5. All messages will be in the standard Alliance for Telecommunications Industry Solutions (ATIS) EMI record format.

6. Messages that error in the billing system of Talk America will be the responsibility of Talk America. If, however, Talk America should encounter significant volumes of errored messages that prevent processing by Talk America within its systems, BellSouth will work with Talk America to determine the source of the errors and the appropriate resolution.

7. The following specifications shall apply to the Optional Daily Usage Feed.

7.1 Usage To Be Transmitted

7.1.1 The following messages recorded by BellSouth will be transmitted to Talk America:

Customer usage data for flat rated local call originating from Talk America's End User lines (1FB or 1FR). The EODUF record for flat rate messages will include:

Date of Call

From Number

To Number

Connect Time

Conversation Time

Method of Recording

From RAO

Rate Class

Message Type

Billing Indicators

Bill to Number

7.1.2 BellSouth will perform duplicate record checks on EODUF records processed to Optional Daily Usage File. Any duplicate messages detected will be deleted and not sent to Talk America.

7.1.3 In the event that Talk America detects a duplicate on Enhanced Optional Daily Usage File they receive from BellSouth, Talk America will drop the duplicate message (Talk America will not return the duplicate to BellSouth).

7.2 Physical File Characteristics

7.2.1 The Enhanced Optional Daily Usage Feed will be distributed to Talk America over their existing Optional Daily Usage File (ODUF) feed. The EODUF messages will be intermingled among Talk America's Optional Daily Usage File (ODUF) messages. The EODUF will be a variable block format (2476) with an LRECL of 2472. The data on the EODUF will be in a non-compacted EMI format (175 byte format plus modules). It will be created on a daily basis (Monday through Friday except holidays).

7.2.2 Data circuits (private line or dial-up) may be required between BellSouth and Talk America for the purpose of data transmission. Where a dedicated line is required, Talk America will be responsible for ordering the circuit, overseeing its installation and coordinating the installation with BellSouth. Talk America will also be responsible for any charges associated with this line. Equipment required on the BellSouth end to attach the line to the mainframe computer and to transmit successfully ongoing will be negotiated on a case by case basis. Where a dial-up facility is required, dial circuits will be installed in the BellSouth data center by BellSouth and the associated charges assessed to Talk America. Additionally, all message toll charges associated with the use of the dial circuit by Talk America will be the responsibility of Talk America. Associated equipment on the BellSouth end, including a modem, will be negotiated on a case by case basis between the Parties. All equipment, including modems and software, that is required on Talk America's end for the purpose of data transmission will be the responsibility of Talk America.

7.3 Packing Specifications

7.3.1 A pack will contain a minimum of one message record or a maximum of 99,999 message records plus a pack header record and a pack trailer record. One transmission can contain a maximum of 99 packs and a minimum of one pack.

7.3.2 The Operating Company Number (OCN), From Revenue Accounting Office (RAO), and Invoice Number will control the invoice sequencing. The From RAO will be used to identify to Talk America which BellSouth RAO is sending the message. BellSouth and Talk America will use the invoice sequencing to control data exchange. BellSouth will be notified of sequence failures identified by Talk America and resend the data as appropriate.

THE DATA WILL BE PACKED USING ATIS EMI RECORDS.

RESALE DISCOUNTS AND RATES

		ALABAMA	FLORIDA	GEORGIA	KENTUCKY	LOUISIANA	MISSISSIPPI	NORTH CAROLINA	SOUTH CAROLINA	TENNESSEE
APPLICABLE DISCOUNTS										
RESIDENCE		16.3%	21.83%	20.3%	16.79%	20.72%	15.75%	21.5%	14.8%	16%
BUSINESS		16.3%	16.81%	17.3%	15.54%	20.72%	15.75%	17.6%	14.8%	16%
CSAs*						9.05%			8.98%	
* Unless noted in this row, the discount for Business will be the applicable discount rate for CSAs.										
OPERATIONAL SUPPORT SYSTEMS (OSS) RATES										
ELEMENT	USOC									
Electronic LSR	SOMEC	$3.50	$3.50	$3.50	$3.50	$3.50	$3.50	$3.50	$3.50	$3.50
Manual LSR	SOMAN	$19.99	$19.99	$19.99	$19.99	$19.99	$19.99	$19.99	$19.99	$19.99
ENHANCED OPTIONAL DAILY USAGE FILE (EODUF) RATES										
EODUF: Message Processing, per message		$0.004	$0.229109	$0.0034555	$0.235889	$0.250015	$0.250424	$0.004	$0.258301	$0.004
OPERATOR SERVICES (OPERATOR CALL PROCESSING AND DIRECTORY ASSISTANCE)										
SELECTIVE CALL ROUTING USING LINE CLASS CODES (SCR-LCC)										
ELEMENT	USOC									
Nonrecurring Charge: Per Unique LCC, per Request, per Switch		$230.60	$84.33	$180.62	$229.65	$82.25	$227.99	$229.65	$226.22	$179.80
Nonrecurring Disconnect Charge: Per Unique LCC, per Request, per Switch		NA	$11.46	NA	NA	NA	NA	NA	NA	NA
CUSTOM BRANDING ANNOUNCEMENT (CBA)										
DIRECTORY ASSISTANCE (DA) CBA via OLNS SOFTWARE										
Recording of DA CBA		$3,000.00	$3,000.00	$3,000.00	$3,000.00	$3,000.00	$3,000.00	$3,000.00	$3,000.00	$3,000.00
Loading of DA CBA per DRAM Card/Switch per OCN		$1, 700.00	$1, 700.00	$1, 700.00	$1, 700.00	$1, 700.00	$1, 700.00	$1, 700.00	$1, 700.00	$1, 700.00

RESALE DISCOUNTS AND RATES

	ALABAMA	FLORIDA	GEORGIA	KENTUCKY	LOUISIANA	MISSISSIPPI	NORTH CAROLINA	SOUTH CAROLINA	TENNESSEE
CUSTOM BRANDING ANNOUNCEMENT (CBA) CONT'd									
DIRECTORY ASSISTANCE (DA) UNBRANDING via OLNS SOFTWARE									
Loading of DA per OCN (1 OCN per Order)	$420.00	$420.00	$420.00	$420.00	$420.00	$420.00	$420.00	$420.00	$420.00
Loading of DA per Switch, per OCN	$16.00	$16.00	$16.00	$16.00	$16.00	$16.00	$16.00	$16.00	$16.00
OPERATOR ASSISTANCE (OA) CBA via OLNS SOFTWARE									
ELEMENT									
Recording of OA CBA	$7,000.00	$7,000.00	$7,000.00	$7,000.00	$7,000.00	$7,000.00	$7,000.00	$7,000.00	$7,000.00
Loading of OA CBA per shelf/ NAV per OCN	$500.00	$500.00	$500.00	$500.00	$500.00	$500.00	$500.00	$500.00	$500.00
Loading of DA CBA per DRAM Card/Switch per OCN	$1,170.00	$1,170.00	$1,170.00	$1,170.00	$1,170.00	$1,170.00	$1,170.00	$1,170.00	$1,170.00
OPERATOR ASSISTANCE (OA) UNBRANDING via OLNS SOFTWARE									
Loading of OA per OCN - Regional	$1,200.00	$1,200.00	$1,200.00	$1,200.00	$1,200.00	$1,200.00	$1,200.00	$1,200.00	$1,200.00

Attachment 2

Network Elements and Other Services

TABLE OF CONTENTS

1. INTRODUCTION 3

2. UNBUNDLED LOOPS 5

3. HIGH FREQUENCY SPECTRUM NETWORK ELEMENT 25

4. LOCAL SWITCHING 29

5. UNBUNDLED NETWORK ELEMENT COMBINATIONS 36

6. TRANSPORT, CHANNELIZATION AND DARK FIBER 44

7. BELLSOUTH SWITCHED ACCESS ("SWA") 8XX TOLL FREE DIALING TEN DIGIT SCREENING SERVICE 49

8. LINE INFORMATION DATABASE (LIDB) 50

9. SIGNALING 52

10. OPERATOR SERVICE AND DIRECTORY ASSISTANCE 58

11. AUTOMATIC LOCATION IDENTIFICATION/DATA MANAGEMENT SYSTEM (ALI/DMS) 63

12. CALLING NAME (CNAM) DATABASE SERVICE 64

13. SERVICE CREATION ENVIRONMENT AND SERVICE MANAGEMENT SYSTEM (SCE/SMS) ADVANCED INTELLIGENT NETWORK (AIN) ACCESS 65

14. BASIC 911 AND E911 66

15. OPERATIONAL SUPPORT SYSTEMS (OSS) 67

LIDB Storage Agreement ..... Exhibit A

Rates ..... Exhibit B

ACCESS TO NETWORK ELEMENTS AND OTHER SERVICES

1. Introduction

1.1 This Attachment sets forth rates, terms and conditions for Network Elements and combinations of Network Elements that BellSouth agrees to offer to Talk America in accordance with its obligations under Section 251(c)(3) of the Act. Additionally, this Attachment sets forth the rates, terms and conditions for other services BellSouth makes available to Talk America. The price for each Network Element and combination of Network Elements and other services are set forth in Exhibit B of this Agreement. Additionally, the provision of a particular Network Element or service may require Talk America to purchase other Network Elements or services.

1.2 For purposes of this Agreement**, "**Network Element**"** is defined to mean a facility or equipment Talk America used in the provision of a telecommunications service. These unbundled network elements will be consistent with the requirements of the FCC 319 rule. For purposes of this Agreement, combinations of Network Elements shall be referred to as "Combinations."

1.2.1 Except as otherwise permitted by law or as set forth in this Agreement, BellSouth shall not impose limitations, restrictions or requirements on requests for the use of the network elements or combinations that would impair the ability of Talk America to offer telecommunications service in the manner Talk America intends.

1.2.2 Except upon request by Talk America, BellSouth shall not separate requested network elements that BellSouth currently combines.

1.2.2.1 Unless otherwise ordered by an appropriate state or federal regulatory agency, currently combined Network Elements are defined as elements that are already combined within BellSouth's network to a given location.

1.3 BellSouth shall, upon request of Talk America, and to the extent technically feasible, provide to Talk America access to its Network Elements for the provision of Talk America's telecommunications services. If no rate is identified in this Agreement, the rate for the specific service or function will be as set forth in the applicable BellSouth tariff or as negotiated by the Parties upon request by either Party. BellSouth will only bill tariffed rates if Talk America requests a service that BellSouth is not required to provide as an unbundled network element pursuant to the Act.

1.4 Talk America may purchase Network Elements and other services from BellSouth for the purpose of combining such network elements in any manner Talk America chooses to provide telecommunication services to its intended users, including recreating existing BellSouth services. With the exception of the sub-loop Network Elements which are located outside of the central office, BellSouth shall

deliver the Network Elements purchased by Talk America to the demarcation point associated with the designated Talk America collocation space.

1.5 BellSouth shall comply with the requirements as set forth in the technical references within this Attachment 2 to the extent that they are consistent with the greater of BellSouth's actual performance or applicable industry standards.

1.6 BellSouth agrees that it shall provide to Talk America on a non-discriminatory basis unbundled Network Elements and ancillary services as set forth in this Agreement and the operations support systems as set forth in this Agreement. BellSouth further agrees that these services, or their functional components, must contain all the same features, functions and capabilities and be provided at a level of quality at least equal to the level which it provides to itself, its Affiliates, and other telecommunications carriers.

1.7 BellSouth shall provide Talk America notification of disconnects, updated and delivered once daily, via web posting.

1.8 **Rates**

1.8.1 The prices that Talk America shall pay to BellSouth for Network Elements and Other Services are set forth in Exhibit B to this Attachment. If Talk America purchases a service(s) from a tariff, all terms and conditions and rates as set forth in such tariff shall apply.

1.8.2 Cancellation Charges**.** If Talk America cancels an order for Network Elements or other services, any costs incurred by BellSouth in conjunction with the provisioning of that order will be recovered in accordance with the methodology described in BellSouth's Private Line Tariff for nondesigned services or BellSouth's FCC No. 1 Tariff, Section 5 for designed services, as applicable and applied to the non-recurring charges in this Agreement.

1.8.3 Service Date Advancement Charges (a.k.a. Expedites)**.** For Service Date Advancement requests by Talk America, Service Date Advancement charges will apply for intervals less than the standard interval as outlined in the BellSouth Product and Services Interval Guide. The charges as outlined in BellSouth's Private Line Tariff or BellSouth's FCC No. 1 Tariff, Section 5, will apply, as applicable.

1.8.4 Order cancellation and expedite charges will apply in accordance with the terms and conditions specified in Attachment 6.

1.8.5 If Talk America modifies an order (Order Modification Charge (OMC)) after being sent a Firm Order Confirmation (FOC) from BellSouth, any costs incurred by BellSouth to accommodate the modification will be paid by Talk America in accordance with FCC No. 1 Tariff, Section 5.

1.8.6 Fractional billing shall apply to all UNE port/loop combinations such that recurring charges will be prorated based upon the number of days that the UNEs are in service. Non-recurring charges shall not be fractionalized.

1.8.7 Talk America reserves the right to order Resale services and/or UNE services to provide End User service at a single End User location.

2. Unbundled Loops

2.1 General

2.1.1 The local loop Network Element ("Loop") is defined as a transmission facility between a distribution frame (or its equivalent) in BellSouth's central office and the loop demarcation point at an end-user customer premises, including inside wire owned by BellSouth. The local loop Network Element includes all features, functions, and capabilities of the transmission facilities, including dark fiber and attached electronics (except those used for the provision of advanced services, such as Digital Subscriber Line Access Multiplexers) and line conditioning.

2.1.2 The provisioning of a Loop to Talk America's collocation space will require cross-office cabling and cross-connections within the central office to connect the Loop to a local switch or to other transmission equipment. These cross-connects are separate components, that are not considered a part of the Loop, and thus, have a separate charge.

2.1.3 To the extent available within BellSouth's network at a particular location, BellSouth will offer Loops capable of supporting telecommunications services. If a requested loop type is not available, and cannot be made available through BellSouth's Unbundled Loop Modification process, then Talk America can use the Special Construction process to request that BellSouth place facilities in order to meet Talk America's loop requirements. Standard Loop intervals shall not apply to the Special Construction process.

2.1.4 Where facilities are available, BellSouth will install Loops in compliance with BellSouth's Products and Services Interval Guide available at the website at http://www.interconnection.bellsouth.com. For orders of 15 or more Loops, the installation and any applicable Order Coordination as described below will be handled on a project basis, and the intervals will be set by the BellSouth project manager for that order. When Loops require a Service Inquiry (SI) prior to issuing the order to determine if facilities are available, the interval for the SI process is separate from the installation interval.

2.1.5 The Loop shall be provided to Talk America in accordance with BellSouth's TR73600 Unbundled Local Loop Technical Specification and applicable industry standard technical references.

2.1.6 Talk America may utilize the unbundled Loops to provide any telecommunications service it wishes, so long as such services are consistent with industry standards and BellSouth's TR73600.

2.1.7 BellSouth will only provision, maintain and repair the Loops to the standards that are consistent with the type of Loop ordered. In those cases where Talk America has requested that BellSouth modify a Loop so that it no longer meets the technical parameters of the original Loop type (e.g., voice grade, ISDN, ADSL, etc.) the resulting Loop will be maintained as an unbundled copper Loop (UCL), and Talk America shall pay the recurring and non-recurring charges for a UCL. For non-service specific loops (e.g. UCL, Loops modified by Talk America using the Unbundled Loop Modification (ULM) process), BellSouth will only support that the Loop has copper continuity and balanced tip-and-ring.

2.1.8 **Loop Testing/Trouble Reporting**

2.1.8.1 Talk America is responsible for testing and isolating troubles on the Loops. Talk America must test and isolate trouble to the BellSouth portion of a designed unbundled loop (e.g., UVL-SL2, UCL-D, etc.) before reporting repair to the UNE Center. At the time of the trouble report, Talk America will be required to provide the results of the Talk America test which indicate a problem on the BellSouth provided loop.

2.1.8.2 Once Talk America has isolated a trouble to the BellSouth provided Loop, and had issued a trouble report to BellSouth on the Loop, BellSouth will take the actions necessary to repair the Loop if a trouble actually exists. BellSouth will repair these Loops in the same time frames that BellSouth repairs similarly situated Loops to its end users.

2.1.8.3 If Talk America reports a trouble on a non-designed loop (e.g., UVL-SL1, UCL-ND, etc.) and no trouble actually exists, BellSouth will charge Talk America for any dispatching and testing (both inside and outside the CO) required by BellSouth in order to confirm the loop's working status. Failure of BellSouth personnel to find trouble in BellSouth facilities will result in no charge if trouble is confirmed at a later date in those facilities but not discovered at the time of the initial repair testing.

2.1.9 **Order Coordination and Order Coordination-Time Specific**

2.1.9.1 "Order Coordination" (OC) allows BellSouth and Talk America to coordinate the installation of the SL2 Loops, Unbundled Digital Loops (UDL) and other Loops where OC may be purchased as an option, to Talk America's facilities to limit end user service outage. OC is available when the Loop is provisioned over an existing circuit that is currently providing service to the end user. OC for physical conversions will be scheduled at BellSouth's discretion during normal working

hours on the committed due date. OC shall be provided in accordance with the chart set forth below.

2.1.9.2 "Order Coordination – Time Specific" (OC-TS) allows Talk America to order a specific time for OC to take place. BellSouth will make every effort to accommodate Talk America's specific conversion time request. However, BellSouth reserves the right to negotiate with Talk America a conversion time based on load and appointment control when necessary. This OC-TS is a chargeable option for all Loops except Unbundled Copper Loops (UCL) and Universal Digital Channel (UDC), and is billed in addition to the OC charge. Talk America may specify a time between 9:00 a.m. and 4:00 p.m. (location time) Monday through Friday (excluding holidays). If Talk America specifies a time outside this window, or selects a time or quantity of Loops that requires BellSouth technicians to work outside normal work hours, overtime charges will apply in addition to the OC and OC-TS charges. Overtime charges will be applied based on the amount of overtime worked and in accordance with the rates established in the E Access Tariff, Section E13.2, for each state. The OC-TS charges for an order due on the same day at the same location will be applied on a per Local Service Request (LSR) basis.

	Order Coordination (OC)	Order Coordination – Time Specific (OC-TS)	Test Points	DLR	Charge for Dispatch and Testing if No Trouble Found
SL-1	Chargeable Option	Chargeable Option	Not available	Chargeable Option – ordered as Engineering Information Document	Charged for Dispatch inside and outside Central Office
UCL-ND	Chargeable Option	Not Available	Not Available	Chargeable Option – ordered as Engineering Information Document	Charged for Dispatch inside and outside Central Office
SL-2	Included	Chargeable Option	Included	Included	Charged for Dispatch outside Central Office
Unbundled Digital Loop	Included	Chargeable Option (except on Universal Digital Channel)	Included (where appropriate)	Included	Charged for Dispatch outside Central Office
Unbundled Copper Loop	Chargeable in accordance with Section 2	Not available	Included	Included	Charged for Dispatch outside Central Office
For UVL-SL1 and UCLs, Talk America must order and will be billed for both OC and OC-TS if requesting OC-TS.					

2.2 **<u>Unbundled Voice Loops (UVLs)</u>**

2.2.1 BellSouth shall make available the following UVLs:

2.2.1.1 2-wire Analog Voice Grade Loop – SL1

2.2.1.2 2-wire Analog Voice Grade Loop – SL2

2.2.1.3 4-wire Analog Voice Grade Loop

2.2.2 Unbundled Voice Loops (UVL) may be provisioned using any type of facility that will support voice grade services. This may include loaded copper, non-loaded copper, digital loop carrier systems, fiber or a combination of any of these facilities. BellSouth, in the normal course of maintaining, repairing, and

configuring its network, may also change the facilities that are used to provide any given voice grade circuit. This change may occur at any time. In these situations, BellSouth will only ensure that the newly provided facility will support voice grade services. BellSouth will not guarantee that Talk America will be able to continue to provide any advanced services over the new facility. BellSouth will offer UVL in two different service levels - Service Level One (SL1) and Service Level Two (SL2).

2.2.3 Unbundled Voice Loop - SL1 (UVL-SL1) loops are 2-wire loop start circuits, will be non-designed, and will not have remote access test points. OC will be offered as a chargeable option on SLI loops when reuse of existing facilities has been requested by Talk America. Talk America may also order OC-TS when a specified conversion time is requested. OC-TS is a chargeable option for any coordinated order and is billed in addition to the OC charge. An Engineering Information (EI) document can be ordered as chargeable option. The EI document provides loop make up information which is similar to the information normally provided in a Design Layout Record. Upon issuance of a non-coordinated order in the service order system, SL1 loops will be activated on the due date in the same manner and time frames that BellSouth normally activates POTS-type loops for its end users.

2.2.4 Unbundled Voice Loop – SL2 (UVL-SL2) loops may be 2-wire or 4-wire circuits, shall have remote access test points, and will be designed with a Design Layout Record provided to Talk America. SL2 circuits can be provisioned with loop start, ground start or reverse battery signaling. OC is provided as a standard feature on SL2 loops. The OC feature will allow Talk America to coordinate the installation of the loop with the disconnect of an existing customer's service and/or number portability service. In these cases, BellSouth will perform the order conversion with standard order coordination at its discretion during normal work hours.

2.3 **Unbundled Digital Loops**

2.3.1 BellSouth will offer Unbundled Digital Loops (UDL). UDLs are service specific, will be designed, will be provisioned with test points (where appropriate), and will come standard with OC and a Design Layout Record (DLR). The various UDLs are intended to support a specific digital transmission scheme or service.

2.3.2 BellSouth shall make available the following UDLs:

2.3.2.1 2-wire Unbundled ISDN Digital Loop

2.3.2.2 2-wire Universal Digital Channel (IDSL Compatible)

2.3.2.3 2-wire Unbundled ADSL Compatible Loop

2.3.2.4 2-wire Unbundled HDSL Compatible Loop

2.3.2.5 4-wire Unbundled HDSL Compatible Loop

2.3.2.6 4-wire Unbundled DS1 Digital Loop

2.3.2.7 4-wire Unbundled Digital Loop/DS0 – 64 kbps, 56 kbps and below

2.3.2.8 DS3 Loop

2.3.2.9 STS-1 Loop

2.3.2.10 OC3 Loop

2.3.2.11 OC12 Loop

2.3.2.12 OC48 Loop

2.3.3 2-Wire Unbundled ISDN Digital Loops will be provisioned according to industry standards for 2-Wire Basic Rate ISDN services and will come standard with a test point, Order Coordination, and a DLR. Talk America will be responsible for providing BellSouth with a Service Profile Identifier (SPID) associated with a particular ISDN-capable loop and end user. With the SPID, BellSouth will be able to adequately test the circuit and ensure that it properly supports ISDN service. BellSouth will not reconfigure its ISDN-capable loop to support IDSL service.

2.3.3.1 The Universal Digital Channel (UDC) (also known as IDSL-compatible Loop) is intended to be compatible with IDSL service and has the same physical characteristics and transmission specifications as BellSouth's ISDN-capable loop. These specifications are listed in BellSouth's TR73600.

2.3.3.2 The UDC may be provisioned on copper or through a Digital Loop Carrier (DLC) system. When UDC Loops are provisioned using a DLC system, the Loops will be provisioned on time slots that are compatible with data-only services such as IDSL.

2.3.4 2-Wire ADSL-Compatible Loop. This is a designed loop that is provisioned according to Revised Resistance Design (RRD) criteria and may be up to 18kft long and may have up to 6kft of bridged tap (inclusive of loop length). The loop is a 2-wire circuit and will come standard with a test point, Order Coordination, and a DLR.

2.3.5 2-Wire or 4-Wire HDSL-Compatible Loop. This is a designed loop that is provisioned according to Carrier Serving Area (CSA) criteria and may be up to 12,000 feet long and may have up to 2,500 feet of bridged tap (inclusive of loop length). It may be a 2-wire or 4-wire circuit and will come standard with a test point, Order Coordination, and a DLR.

2.3.6 4-Wire Unbundled DS1 Digital Loop. This is a designed 4-wire loop that is provisioned according to industry standards for DS1 or Primary Rate ISDN services and will come standard with a test point, Order Coordination, and a DLR.

2.3.7 4-Wire Unbundled Digital/DS0 Loop. These are designed 4-wire loops that may configured as 64kbps, 56kbps, 19kbps, and other sub-rate speeds associated with digital data services and will come standard with a test point, Order Coordination, and a DLR.

2.3.8 DS3 Loop**.** DS3 Loop is a two-point digital transmission path, which provides for simultaneous two-way transmission of serial, bipolar, return-to-zero isochronous digital electrical signals at a transmission rate of 44.736 megabits per second (Mbps) that is dedicated to the use of the ordering CLEC in its provisioning of local exchange and associated exchange access services. It may provide transport for twenty-eight (28) DS1 channels, each of which provides the digital equivalent of twenty-four analog voice grade channels. The interface to unbundled dedicated DS3 transport is a metallic-based electrical interface.

2.3.9 STS-1 Loop**.** STS-1 Loop is a high-capacity digital transmission path with SONET VT1.5 mapping that is dedicated for the use of the ordering customer for the purpose of provisioning local exchange and associated exchange access services. It is a two-point digital transmission path, which provides for simultaneous two-way transmission of serial bipolar return-to-zero synchronous digital electrical signals at a transmission rate of 51.84 megabits per second (Mbps). It may provide transport for twenty-eight (28) DS1 channels, each of which provides the digital equivalent of twenty-four analog voice grade channels. The interface to unbundled dedicated STS-1 transport is a metallic-based electrical interface.

2.3.10 OC3 Loop/OC12 Loop/OC48 Loop**.** OC3/OC-12/OC-48 Loops are optical two-point transmission paths that are dedicated to the use of the ordering CLEC in its provisioning of local exchange and associated exchange access services. The physical interface for all optical transport is optical fiber. This interface standard allows for transport of many different digital signals using a basic building block or base transmission rate of 51.84 megabits per second (Mbps). Higher rates are direct multiples of the base rate. The following rates are applicable: OC-3 - 155.52 Mbps; OC12 - 622.08 Mbps; and OC-48 - 2488 Mbps.

2.3.11 DS3 and above services come with a test point and a DLR. Mileage is airline miles, rounded up and a minimum of one mile applies. BellSouth TR 73501 LightGate®Service Interface and Performance Specifications, Issue D, June 1995 applies to DS3 and above services.

2.4 **Unbundled Copper Loops (UCL)**

2.4.1 BellSouth shall make available Unbundled Copper Loops (UCLs). The UCL is a copper twisted pair Loop that is unencumbered by any intervening equipment (e.g., filters, load coils, range extenders, digital loop carrier, or repeaters) and is not intended to support any particular telecommunications service. The UCL will be offered in two types – Designed and Non-Designed.

2.4.2 **Unbundled Copper Loop – Designed (UCL-D)**

2.4.2.1 The UCL-D will be provisioned as a dry copper twisted pair loop that is unencumbered by any intervening equipment (e.g., filters, load coils, range extenders, digital loop carrier, or repeaters). The UCL-D will be offered in two versions - Short and Long.

2.4.2.2 A short UCL-D (18,000 feet or less) is provisioned according to Resistance Design parameters, may have up to 6,000 feet of bridged tap and will have up to 1300 ohms of resistance.

2.4.2.3 The long UCL-D (beyond 18,000 feet) is provisioned as a dry copper twisted pair longer than 18,000 feet and may have up to 12,000 feet of bridged tap and up to 2800 ohms of resistance.

2.4.2.4 The UCL-D is a designed circuit, is provisioned with a test point and comes standard with a DLR. OC is required on UCLs where a reuse of existing facilities has been requested by Talk America.

2.4.2.5 These loops are not intended to support any particular services and may be utilized by Talk America to provide a wide-range of telecommunications services so long as those services do not adversely affect BellSouth's network. This facility will include a Network Interface Device (NID) at the customer's location for the purpose of connecting the loop to the customer's inside wire.

2.4.2.6 BellSouth will make available the following UCL-Ds:

2.4.2.6.1 2-Wire UCL-D/short

2.4.2.6.2 2-Wire UCL-D/long

2.4.2.6.3 4-Wire UCL-D/short

2.4.2.6.4 4-Wire UCL-D/long

2.4.3 **Unbundled Copper Loop – Non-Designed (UCL-ND)**

2.4.3.1 The UCL–ND is provisioned as a dedicated 2-wire metallic transmission facility from BellSouth's Main Distribution Frame to a customer's premises (including the NID). The UCL-ND will be a "dry copper" facility in that it will not have any intervening equipment such as load coils, repeaters, or digital access main lines

("DAMLs"), and may have up to 6,000 feet of bridged tap between the end user's premises and the serving wire center. The UCL-ND typically will be 1300 Ohms resistance and in most cases will not exceed 18,000 feet in length, although the UCL-ND will not have a specific length limitation. For loops less than 18,000 feet and with less than 1300 Ohms resistance, the loop will provide a voice grade transmission channel suitable for loop start signaling and the transport of analog voice grade signals. The UCL-ND will not be designed and will not be provisioned with either a DLR or a test point.

2.4.3.2 The UCL-ND facilities may be mechanically assigned using BellSouth's assignment systems. Therefore, the Loop Make Up process is not required to order and provision the UCL-ND. However, Talk America can request Loop Make Up for which additional charges would apply.

2.4.3.3 At an additional charge, BellSouth also will make available Loop Testing so that Talk America may request further testing on the UCL-ND.

2.4.3.4 UCL-ND loops are not intended to support any particular service and may be utilized by Talk America to provide a wide-range of telecommunications services so long as those services do not adversely affect BellSouth's network. The UCL-ND will include a Network Interface Device (NID) at the customer's location for the purpose of connecting the loop to the customer's inside wire.

2.4.3.5 Order Coordination (OC) will be provided as a chargeable option and may be utilized when the UCL-ND provisioning is associated with the reuse of BellSouth facilities. Order Coordination -Time Specific (OC-TS) does not apply to this product.

2.4.3.6 Talk America may use BellSouth's Unbundled Loop Modification (ULM) offering to remove bridge tap and/or load coils from any loop within the BellSouth network. Therefore, some loops that would not qualify as UCL-ND could be transformed into loops that do qualify, using the ULM process.

2.5 Unbundled Loop Modifications (Line Conditioning)

2.5.1 Line Conditioning is defined as the removal from the Loop of any devices that may diminish the capability of the Loop to deliver high-speed switched wireline telecommunications capability, including xDSL service. Such devices include, but are not limited to, load coils, bridged taps, low pass filters, and range extenders.

2.5.2 BellSouth shall condition Loops, as requested by Talk America, whether or not BellSouth offers advanced services to the End User on that Loop.

2.5.3 In some instances, Talk America will require access to a copper twisted pair loop unfettered by any intervening equipment (e.g., filters, load coils, range extenders, etc.), so that Talk America can use the loop for a variety of services by attaching appropriate terminal equipment at the ends. Talk America will determine the type

of service that will be provided over the loop. BellSouth's Unbundled Loop Modifications (ULM) process will be used to determine the costs and feasibility of conditioning the loops as requested. Rates for ULM are as set forth in Exhibit B of this Attachment.

2.5.4 In those cases where Talk America has requested that BellSouth modify a Loop so that it no longer meets the technical parameters of the original Loop type (e.g., voice grade, ISDN, ADSL, etc.) the resulting modified Loop will be ordered and maintained as a UCL.

2.5.5 The Unbundled Loop Modifications (ULM) offering provides the following elements: 1) removal of devices on 2-wire or 4-wire Loops equal to or less than 18,000 feet; 2) removal of devices on 2-wire or 4-wire Loops longer than 18,000 feet; and 3) removal of bridged-taps on loops of any length.

2.5.6 Talk America shall request Loop make up information pursuant to this Attachment prior to submitting a service inquiry and/or a LSR for the Loop type that Talk America desires BellSouth to condition.

2.6 **Loop Provisioning Involving Integrated Digital Loop Carriers**

2.6.1 Where Talk America has requested an Unbundled Loop and BellSouth uses Integrated Digital Loop Carrier (IDLC) systems to provide the local service to the end user and BellSouth has a suitable alternate facility available, BellSouth will make such alternative facilities available to Talk America. If a suitable alternative facility is not available, then to the extent it is technically feasible, BellSouth will make alternative arrangements available to Talk America (e.g. hairpinning).

2.6.2 BellSouth will select one of the following arrangements:

1. Roll the circuit(s) from the IDLC to any spare copper that exists to the customer premises.
2. Roll the circuit(s) from the IDLC to an existing DLC that is not integrated.
3. If capacity exists, provide "side-door" porting through the switch.
4. If capacity exists, provide "DACS-door" porting (if the IDLC routes through a DACS prior to integration into the switch).

2.6.3 Arrangements 3 and 4 above require the use of a designed circuit. Therefore, non-designed loops such as the SL1 voice grade and UCL-ND may not be ordered in these cases.

2.6.4 If no alternate facility is available, BellSouth will utilize its Special Construction (SC) process to determine the additional costs required to provision the loop facilities. Talk America will then have the option of paying the one-time SC rates to place the loop.

2.7 **Network Interface Device (NID)**

2.7.1 The NID is defined as any means of interconnection of end-user customer premises wiring to BellSouth's distribution plant, such as a cross-connect device used for that purpose. The NID is a single-line termination device or that portion of a multiple-line termination device required to terminate a single line or circuit at the premises. The NID features two independent chambers or divisions that separate the service provider's network from the end user's customer-premises wiring. Each chamber or division contains the appropriate connection points or posts to which the service provider and the end user each make their connections. The NID provides a protective ground connection and is capable of terminating cables such as twisted pair cable.

2.7.1.1 BellSouth shall permit Talk America to connect Talk America's Loop facilities the end-user's customer-premises wiring through the BellSouth NID or at any other technically feasible point.

2.7.2 **Access to NID**

2.7.2.1 Talk America may access the end user's customer-premises wiring by any of the following means and Talk America shall not disturb the existing form of electrical protection and shall maintain the physical integrity of the NID:

2.7.2.1.1 1) BellSouth shall allow Talk America to connect its loops directly to BellSouth's multi-line residential NID enclosures that have additional space and are not used by BellSouth or any other telecommunications carriers to provide service to the premises.

2.7.2.1.2 2) Where an adequate length of the end user's customer premises wiring is present and environmental conditions permit, either Party may remove the customer premises wiring from the other Party's NID and connect such wiring to that Party's own NID;

2.7.2.1.3 3) Enter the subscriber access chamber or dual chamber NID enclosures for the purpose of extending a connect divisioned or spliced jumper wire from the customer premises wiring through a suitable "punch-out" hole of such NID enclosures; or

2.7.2.1.4 4) Request BellSouth to make other rearrangements to the end user customer premises wiring terminations or terminal enclosure on a time and materials cost basis.

2.7.2.2 In no case shall either Party remove or disconnect the other Party's loop facilities from either Party's NIDs, enclosures, or protectors unless the applicable Commission has expressly permitted the same and the disconnecting Party provides prior notice to the other Party. In such cases, it shall be the responsibility of the Party disconnecting loop facilities to leave undisturbed the existing form of electrical protection and to maintain the physical integrity of the NID. It will be

Talk America's responsibility to ensure there is no safety hazard and will hold BellSouth harmless for any liability associated with the removal of the BellSouth loop from the BellSouth NID. Furthermore, it shall be the responsibility of the disconnecting Party, once the other Party's loop has been disconnected from the NID, to reconnect the disconnected loop to a nationally recognized testing laboratory listed station protector, which has been grounded as per Article 800 of the National Electrical Code. If no spare station protector exists in the NID, the disconnected loop must be appropriately cleared, capped and stored.

2.7.2.3 In no case shall either Party remove or disconnect ground wires from BellSouth's NIDs, enclosures, or protectors.

2.7.2.4 In no case shall either Party remove or disconnect NID modules, protectors, or terminals from BellSouth's NID enclosures.

2.7.2.5 Due to the wide variety of NID enclosures and outside plant environments, BellSouth will work with Talk America to develop specific procedures to establish the most effective means of implementing this section if the procedures set forth herein do not apply to the NID in question.

2.7.3 Technical Requirements

2.7.3.1 The NID shall provide an accessible point of interconnection and shall maintain a connection to ground.

2.7.3.2 If an existing NID is accessed, it shall be capable of transferring electrical analog or digital signals between the end user's customer premises and the Distribution Media and/or cross connect to Talk America's NID.

2.7.3.3 Existing BellSouth NIDS will be provided in "as is" condition. Talk America may request BellSouth do additional work to the NID on a time and material basis. When Talk America deploys its own local loops with respect to multiple-line termination devices, Talk America shall specify the quantity of NIDs connections that it requires within such device.

2.8 Sub-Loop Elements

2.8.1 Where facilities permit, BellSouth shall offer access to its Unbundled Sub-Loop (USL) and Unbundled Sub-Loop Concentration (USLC) System.

2.8.2 <u>Unbundled Sub-Loop Distribution</u>

2.8.2.1 The unbundled sub-loop distribution facility is a dedicated transmission facility that BellSouth provides from an end user's point of demarcation to a BellSouth cross-connect device. The BellSouth cross-connect device may be located within a remote terminal (RT) or a stand-alone cross-box in the field or in the equipment

room of a building. The unbundled sub-loop distribution media is a copper twisted pair that can be provisioned as a 2 Wire or 4 Wire facility. BellSouth will make the following available sub-loop distribution offerings where facilities permit:

Unbundled Sub-Loop Distribution – Voice Grade
Unbundled Copper Sub-Loop
Unbundled Sub-Loop Distribution – Intrabuilding Network Cable (aka riser cable)

2.8.2.2 Unbundled Sub-Loop Distribution – Voice Grade (USLD-VG) is a sub-loop facility from the cross-box in the field up to and including the point of demarcation, at the end user's premises and may have load coils.

2.8.2.3 Unbundled Copper Sub-Loop (UCSL) is a copper facility of any length provided from the cross-box in the field up to and including the end-user's point of demarcation. If available, this facility will not have any intervening equipment such as load coils between the end-user and the cross-box.

2.8.2.4 If Talk America requests a UCSL and it is not available, Talk America may request the Sub-Loop facility be modified pursuant to the ULM process request to remove load coils and/or bridged taps. If load coils and/or bridged taps are removed, the facility will be classified as a UCSL.

2.8.2.5 Unbundled Sub-Loop Distribution – Intrabuilding Network Cable (USLD-INC) is the distribution facility inside a building or between buildings on the same continuous property which is not separated by a public street or road. USLD-INC includes the facility from the cross-connect device in the building equipment room up to and including the point of demarcation, at the end user's premises.

2.8.2.6 BellSouth will install a cross connect panel in the building equipment room for the purpose of accessing USLD-INC pairs from a building equipment room. The cross-connect panel will function as a single point of interconnection (SPOI) for USLD-INC and will be accessible by multiple carriers as space permits. BellSouth will place cross-connect blocks in 25-pair increments for Talk America's use on this cross-connect panel. Talk America will be responsible for connecting its facilities to the 25-pair cross-connect block(s).

2.8.2.7 Unbundled Sub-Loop distribution facilities shall support functions associated with provisioning, maintenance and testing of the Unbundled Sub-Loop. For access to Voice Grade USLD and UCSL, Talk America shall install a cable to the BellSouth cross-box pursuant to the terms and conditions for physical collocation for remote sites set forth in this Agreement. This cable would be connected by a BellSouth technician within the BellSouth cross-box during the set-up process. Talk America's cable pairs can then be connected to BellSouth's USL within the BellSouth cross-box by the BellSouth technician.

2.8.2.8 Through the Service Inquiry (SI) process, BellSouth will determine whether access to Unbundled Sub-Loops at the location requested by Talk America is technically feasible and whether sufficient capacity exists in the cross-box. If existing capacity is sufficient to meet Talk America's request, then BellSouth will perform the site set-up as described in Section 2.8.2.9. If any work must be done to modify existing BellSouth facilities or add new facilities (other than adding the cross-connect panel in a building equipment room as noted in Section 2.8.2.9) to accommodate Talk America's request for Unbundled Sub-Loops, Talk America may request BellSouth's Special Construction (SC) process to determine additional costs required to provision the Unbundled Sub-Loops. Talk America will have the option to proceed under the SC process to modify the BellSouth facilities.

2.8.2.9 The site set-up must be completed before Talk America can order sub-loop pairs. For the site set-up in a BellSouth cross-connect box in the field, BellSouth will perform the necessary work to splice Talk America's cable into the cross-connect box. For the site set-up inside a building equipment room, BellSouth will perform the necessary work to install the cross-connect panel and the connecting block(s) that will be used to provide access to the requested USLs.

2.8.2.10 Once the site set-up is complete, Talk America will request sub-loop pairs through submission of a Local Service Request (LSR) form to the Local Carrier Service Center (LCSC). Order Coordination is required with USL pair provisioning when Talk America requests reuse of an existing facility and is in addition to the USL pair rate. For expedite requests by Talk America for sub-loop pairs, expedite charges will apply for intervals less than 5 days.

2.8.2.11 Unbundled Sub-Loops will be provided in accordance with technical reference TR73600.

2.8.3 **Unbundled Network Terminating Wire (UNTW)**

2.8.3.1 Unbundled Network Terminating Wire (UNTW) is unshielded twisted copper wiring that is used to extend circuits from an intra-building network cable terminal or from a building entrance terminal to an individual customer's point of demarcation. It is the final portion of the Loop which, in multi-subscriber configurations, represents the point at which the network branches out to serve individual subscribers.

2.8.3.2 This element will be provided in Multi-Dwelling Units (MDUs) and/or Multi-Tenants Units (MTUs) where BellSouth owns wiring all the way to the end-users premises. BellSouth will not provide this element in those locations where the property owner provides its own wiring to the end-user's premises, where a third party owns the wiring to the end-user's premises or where the property owner will not allow BellSouth to place its facilities to the end user.

2.8.3.3 Requirements

2.8.3.3.1 On a multi-unit premises, upon request of the other Party ("Requesting Party"), the Party owning the network terminating wire will provide access to UNTW pairs on an Access Terminal that is suitable for use by multiple carriers at each Garden Terminal or Wiring Closet.

2.8.3.3.2 The Provisioning Party shall not be required to install new or additional NTW beyond existing NTW to provision the services of the Requesting Party.

2.8.3.3.3 Upon receipt of the UNTW Service Inquiry (SI) requesting access to the Provisioning Party's UNTW pairs at a multi-unit premises, representatives of both Parties will participate in a meeting at the site of the requested access. The purpose of the site visit will include discussion of the procedures for installation and location of the Access Terminals. By request of the Requesting Party, an Access Terminal will be installed either adjacent to each Provisioning Party's Garden Terminal or inside each Wiring Closet. Requesting Party will deliver and connect its central office facilities to the UNTW pairs within the Access Terminal. Requesting Party may access any available pair on an Access Terminal. A pair is available when a pair is not being utilized to provide service or where the end user has requested a change in its local service provider to the Requesting Party. Prior to connecting Requesting Party's service on a pair previously used by Provisioning Party, Requesting Party is responsible for ensuring the end-user is no longer using Provisioning Party's service or another CLEC's service before accessing UNTW pairs.

2.8.3.3.4 Access Terminal installation intervals will be established on an individual case basis.

2.8.3.3.5 Requesting Party is responsible for obtaining the property owner's permission for Provisioning Party to install an Access Terminal(s) on behalf of the Requesting Party. The submission of the SI by the Requesting Party will serve as certification by the Requesting Party that such permission has been obtained. If the property owner objects to Access Terminal installations that are in progress or subsequent to completion and demands removal of Access Terminals, Requesting Party will be responsible for costs associated with removing Access Terminals and restoring property to its original state prior to Access Terminals being installed.

2.8.3.3.6 The Requesting Party shall indemnify and hold harmless the Provisioning Party against any claims of any kind that may arise out of the Requesting Party's failure to obtain the property owner's permission. Requesting Party will be billed for non-recurring and recurring charges for accessing UNTW pairs at the time the Requesting Party activates the pair(s). The Requesting Party will notify the Provisioning Party each time it activates UNTW pairs using the LSR form.

2.8.3.3.7 Requesting Party will isolate and report troubles in the manner specified by the Provisioning Party. Requesting Party must tag the UNTW pair that requires repair. If Provisioning Party dispatches a technician on a reported trouble call and no UNTW trouble is found, Provisioning Party will charge Requesting Party for time spent on the dispatch and testing the UNTW pair(s).

2.8.3.3.8 If Requesting Party initiates the Access Terminal installation and the Requesting Party has not activated at least one pair on the Access Terminal installed pursuant to Requesting Party's request for an Access Terminal within 6 months of installation of the Access Terminal, Provisioning Party will bill Requesting Party a non-recurring charge equal to the actual cost of provisioning the Access Terminal.

2.8.3.3.9 If Provisioning Party determines that Requesting Party is using the UNTW pairs without reporting the activation of the pairs, the following charges shall apply:

2.8.3.3.9.1 If Requesting Party issued a LSR to disconnect an end-user from Provisioning Party in order to use a UNTW pair, Requesting Party will be billed for the use of the pair back to the disconnect order date.

2.8.3.3.9.2 If Requesting Party activated a UNTW pair on which Provisioning Party was not previously providing service, Requesting Party will be billed for the use of that pair back to the date the end-user began receiving service using that pair. Upon request, Requesting Party will provide copies of its billing record to substantiate such date. If Requesting Party fails to provide such records, then Provisioning Party will bill the Requesting Party back to the date of the Access Terminal installation.

2.8.4 **Unbundled Sub-Loop Feeder**

2.8.4.1 Unbundled Sub-Loop Feeder (USLF) provides connectivity between BellSouth's central office and cross-box (or other access point) that serves an end user location.

2.8.4.2 USLF utilized for voice traffic can be configured as 2-wire voice (USLF-2W/V) or 4-wire voice (USLF-4W/V).

2.8.4.3 USLF utilized for digital traffic can be configured as 2-wire ISDN (USLF-2W/I); 2-wire Copper (USLF-2W/C); 4-wire Copper (USLF-4W/C); 4-wire DS0 level loop (USLF-4W/D0); or 4-wire DS1 and ISDN (USLF-4W/DI).

2.8.4.4 USLF will provide access to both the equipment and the features in the BellSouth central office and BellSouth cross box necessary to provide a 2W or 4W communications pathway from the BellSouth central office to the BellSouth cross-box. This element will allow for the connection of Talk America's loop distribution elements onto BellSouth's feeder system.

2.8.4.5 Requirements

2.8.4.5.1 Talk America will extend a compatible cable to BellSouth's cross-box. BellSouth will connect the cable to a panel inside the BellSouth cross-box to the requested level of feeder element. In those cases when there is no room in the BellSouth cross-box to accommodate the additional cross-connect panels mentioned above, BellSouth will utilize its Special Construction process to determine the costs to provide the sub-loop feeder element to Talk America. Talk America will then have the option of paying the special construction charges or canceling the order.

2.8.4.5.2 USLF will be a designed circuit and BellSouth will provide a Design Layout Record (DLR) for this element.

2.8.4.5.3 BellSouth will provide USLF elements in accordance with applicable industry standards for these types of facilities. Where industry standards do not exist, BellSouth's TR73600 will be used to determine performance parameters.

2.8.5 **Unbundled Loop Concentration (ULC)**

2.8.5.1 BellSouth will provide to Talk America Unbundled Loop Concentration (ULC). Loop concentration systems in the central office concentrate the signals transmitted over local loops onto a digital loop carrier system. The concentration device is placed inside a BellSouth central office. BellSouth will offer ULC with a TR008 interface or a TR303 interface.

2.8.5.2 ULC will be offered in two system options. System A will allow up to 96 BellSouth loops to be concentrated onto two or more DS1s. The high-speed connection from the concentrator will be at the electrical DS1 level and will connect to Talk America at Talk America's collocation site. System B will allow up to 192 BellSouth loops to be concentrated onto 4 or more DS1s. System A may be upgraded to a System B. A minimum of two DS1s is required for each system (i.e., System A requires two DS1s and System B would require an additional two DS1s or four in total). All DS1 interfaces will terminate to Talk America's collocation space. ULC service is offered with concentration (2 DS1s for 96 channels) or without concentration (4 DS1s for 96 channels) and with or without protection. A Loop Interface element will be required for each loop that is terminated onto the ULC system.

2.8.6 **Unbundled Sub-Loop Concentration (USLC)**

2.8.6.1 Where facilities permit, Talk America may concentrate its sub-loops onto multiple DS1s back to the BellSouth Central Office.

2.8.6.2 USLC, using the Lucent Series 5 equipment, will be offered in two system options. System A will allow up to 96 of Talk America's sub-loops to be concentrated onto two or more DS1s. System B will allow an additional 96 of Talk America's sub-loops to be concentrated onto two or more additional DS1s. One System A may be supplemented with one System B and they both must be physically located in a

single Series 5 dual channel bank. A minimum of two DS1s is required for each system (i.e., System A requires two DS1s and System B would require an additional two DS1s or four in total). The DS1 level facility that connects the Remote Terminal site with the serving wire center is known as a Feeder Interface. All DS1 Feeder Interfaces will terminate to Talk America's demarcation point associated with Talk America's collocation space within the SWC that serves the remote terminal (RT). USLC service is offered with or without concentration and with or without a protection DS1.

2.8.6.3 Talk America is required to deliver its sub-loops to its own cross-box, RT, or other similar device and deliver a single cable to the BellSouth RT. This cable shall be connected, by a BellSouth technician, to a cross-connect panel within the BellSouth RT/cross-box and shall allow Talk America's sub-loops to be placed on the USLC and transported to Talk America's collocation space at a DS1 level.

2.8.7 **Dark Fiber Loop**

2.8.7.1 Dark Fiber Loop is an unused optical transmission facility without attached signal regeneration, multiplexing, aggregation or other electronics that connects two points within BellSouth's network. Dark Fiber Loops may be strands of optical fiber existing in aerial or underground structure. BellSouth will not provide line terminating elements, regeneration or other electronics necessary for Talk America to utilize Dark Fiber Loops.

2.8.7.2 A Dark Fiber Loop is a point to point arrangement from an end user's premises connected via a cross connect to the demarcation point associated with Talk America's collocation space in the end user's serving wire center.

2.8.7.3 Dark Fiber Loop rates are differentiated between Local Channel, Interoffice Channel and Local Loop.

2.8.7.4 Requirements

2.8.7.4.1 BellSouth shall make available Dark Fiber Loop where it exists in BellSouth's network and where, as a result of future building or deployment, it becomes available. Dark Fiber Loop will not be deemed available if: (1) it is used by BellSouth for maintenance and repair purposes; (2) it is designated for use pursuant to a firm order placed by another customer; (3) it is restricted for use by all carriers, including BellSouth, because of transmission problems or because it is scheduled for removal due to documented changes to roads and infrastructure; or (4) BellSouth has plans to use the fiber within a two-year planning period. BellSouth is not required to place the fiber for Dark Fiber Loop if none is available.

2.8.7.4.2 If the requested Dark Fiber Loop has any lightwave repeater equipment interspliced to it, BellSouth will remove such equipment at Talk America's request subject to time and materials charges.

2.8.7.4.3 Talk America is solely responsible for testing the quality of the Dark Fiber to determine its usability and performance specifications.

2.8.7.4.4 BellSouth shall use its commercially reasonable efforts to provide to Talk America information regarding the location, availability and performance of Dark Fiber Loop within ten (10) business days after receiving a Service Inquiry ("SI") from Talk America.

2.8.7.4.5 If the requested Dark Fiber Loop is available, BellSouth shall use commercially reasonable efforts to provision the Dark Fiber Loop to Talk America within twenty (20) business days after Talk America submits a valid, error free LSR. Provisioning includes identification of appropriate connection points (e.g., Light Guide Interconnection (LGX) or splice points) to enable Talk America to connect or splice Talk America provided transmission media (e.g., optical fiber) or equipment to the Dark Fiber Loop.

2.8.7.4.6 Talk America may splice at the end points and test Dark Fiber Loop obtained from BellSouth using Talk America or Talk America designated personnel. BellSouth shall provide appropriate interfaces to allow splicing and testing of Dark Fiber Loop. For fiber in underground conduit, BellSouth shall provide a minimum of 25 feet of excess cable to allow the uncoiled fiber to reach from the manhole to a splicing van.

2.9 **Loop Makeup (LMU)**

2.9.1 Description of Service

2.9.1.1 BellSouth shall make available to Talk America (LMU) information so that Talk America can make an independent judgment about whether the Loop is capable of supporting the advanced services equipment Talk America intends to install and the services Talk America wishes to provide. This section addresses LMU as a *preordering* transaction, distinct from Talk America ordering any other service(s). Loop Makeup *Service Inquiries (LMUSI) for preordering loop makeup* are likewise unique from other preordering functions with associated service inquiries (SI) as described in this Agreement.

2.9.1.2 BellSouth will provide Talk America LMU information consisting of the composition of the loop material (copper/fiber); the existence, location and type of equipment on the Loop, including but not limited to digital loop carrier or other remote concentration devices, feeder/distribution interfaces, bridged taps, load coils, pair-gain devices; the loop length; the wire gauge and electrical parameters.

2.9.1.3 BellSouth's LMU information is provided to Talk America as it exists either in BellSouth's databases or in its hard copy facility records. BellSouth does not guarantee accuracy or reliability of the LMU information provided.

2.9.1.4 Talk America may choose to use equipment that it deems will enable it to provide a certain type and level of service over a particular BellSouth Loop. The determination shall be made solely by Talk America and BellSouth shall not be liable in any way for the performance of the advanced data services provisioned over said Loop. The specific Loop type (ADSL, HDSL, or otherwise) ordered on the LSR must match the LMU of the loop reserved taking into consideration any requisite line conditioning. The LMU data is provided for informational purposes only and does not guarantee Talk America's ability to provide advanced data services over the ordered loop type. Further, if Talk America orders loops that are not intended to support advanced services (such as UV-SL1, UV-SL2, or ISDN compatible loops) and that are not inventoried as advanced services loops, the LMU information for such loops is subject to change at any time due to modifications and/or upgrades to BellSouth's network. Talk America is fully responsible for any of its service configurations that may differ from BellSouth's technical standard for the loop type ordered.

2.9.2 **Submitting Loop Makeup Service Inquiries**

2.9.2.1 Talk America may obtain LMU information by submitting a LMU Service Inquiry (LMUSI) mechanically or manually. Mechanized LMUSIs should be submitted through BellSouth's Operational Support Systems interfaces. After obtaining the Loop information from the mechanized LMUSI process, if Talk America needs further loop information in order to determine loop service capability, Talk America may initiate a separate Manual Service Inquiry for a separate nonrecurring charge as set forth in Exhibit B of this Attachment.

2.9.2.2 Manual LMUSIs shall be submitted by electronic mail to BellSouth's Complex Resale Support Group (CRSG)/Account Team utilizing the Preordering Loop Makeup Service Inquiry form. The service interval for the return of a Loop Makeup Manual Service Inquiry is three business days. Manual LMUSIs are not subject to expedite requests. This service interval is distinct from the interval applied to the subsequent service order.

2.9.3 **Loop Reservations**

2.9.3.1 For a Mechanized LMUSI, Talk America may reserve up to ten Loop facilities. For a Manual LMUSI, Talk America may reserve up to three Loop facilities.

2.9.3.2 Talk America may reserve facilities for up to four (4) business days for each facility requested on a LMUSI from the time the LMU information is returned to Talk America. During and prior to Talk America placing an LSR, the reserved facilities are rendered unavailable to other customers, including BellSouth. If Talk

America does not submit an LSR for a UNE service on a reserved facility within the four-day reservation timeframe, the reservation of that spare facility will become invalid and the facility will be released.

2.9.3.3 Charges for preordering LMUSI are separate from any charges associated with ordering other services from BellSouth.

2.9.4 **Ordering of Other UNE Services**

2.9.4.1 All LSRs issued for reserved facilities shall reference the facility reservation number as provided by BellSouth. Talk America will not be billed any additional LMU charges for the loop ordered on such LSR. If, however, Talk America does not reserve facilities upon an initial LMUSI, Talk America's placement of an order for an advanced data service type facility will incur the appropriate billing charges to include service inquiry and reservation per Exhibit B of this Attachment.

2.9.4.2 Where Talk America has reserved multiple Loop facilities on a single reservation, Talk America may not specify which facility shall be provisioned when submitting the LSR. For those occasions, BellSouth will assign to Talk America, subject to availability, a facility that meets the BellSouth technical standards of the BellSouth type Loop as ordered by Talk America. If the ordered Loop type is not available, Talk America may utilize the Unbundled Loop Modification process or the Special Construction process, as applicable, to obtain the Loop type ordered.

3. High Frequency Spectrum Network Element

3.1 General

3.1.1 BellSouth shall provide Talk America access to the high frequency portion of the local loop as an unbundled network element only where BellSouth is the voice service provider to the end user ("High Frequency Spectrum") at the rates set forth in this Attachment.

3.1.2 The High Frequency Spectrum is defined as the frequency range above the voiceband on a copper loop facility carrying analog circuit-switched voiceband transmissions. Access to the High Frequency Spectrum is intended to allow Talk America the ability to provide Digital Subscriber Line ("xDSL") data services to the end user for which BellSouth provides voice services. The High Frequency Spectrum shall be available for any version of xDSL complying with Spectrum Management Class 5 of ANSI T1.417, *American National Standard for Telecommunications, Spectrum Management for Loop Transmission Systems*. BellSouth will continue to have access to the low frequency portion of the loop spectrum (from 300 Hertz to at least 3000 Hertz, and potentially up to 3400 Hertz, depending on equipment and facilities) for the purposes of providing voice service. Talk America shall only use xDSL technology that is within the PSD mask for Spectrum Management Class 5 as found in the above-mentioned document.

3.1.3 Access to the High Frequency Spectrum requires an unconditioned, 2-wire copper Loop. An unloaded Loop is a copper Loop with no load coils, low-pass filters, range extenders, DAMLs, or similar devices and minimal bridged taps consistent with ANSI T1.413 and T1.601. BellSouth will provide Loop conditioning to Talk America in accordance with the Unbundled Loop Modification process set forth in Section 2.5 of this Attachment. BellSouth is not required to condition a Loop for access to the High Frequency spectrum if conditioning of that Loop significantly degrades BellSouth's voice service. If Talk America requests that BellSouth condition a Loop longer than 18,000 ft. and such conditioning significantly degrades the voice services on the Loop, Talk America shall pay for the Loop to be restored to its original state.

3.2 **Provisioning of High Frequency Spectrum and Splitter Space**

3.2.1 BellSouth will provide Talk America with access to the High Frequency Spectrum as follows:

3.2.1.1 To order High Frequency Spectrum on a particular Loop, Talk America must have a Digital Subscriber Line Access Multiplexer (DSLAM) collocated in the central office that serves the end-user of such Loop. Talk America may order splitters in a central office once it has installed its DSLAM in that central office. BellSouth will install splitters within forty-two (42) calendar days of Talk America's submission of such order to the BellSouth Complex Resale Support Group; provided, however, that in the event BellSouth did not have reasonable notice that a particular central office was to have a splitter installed therein, the forty-two (42) day interval shall not apply. Collocation itself or an application for collocation will serve as reasonable notice.

3.2.1.2 Once a splitter is installed on behalf of Talk America in a central office in which Talk America is located, Talk America shall be entitled to order the High Frequency Spectrum on lines served out of that central office. BellSouth will bill and Talk America shall pay the electronic or manual ordering charges as applicable when Talk America orders High Frequency Spectrum for end-user service.

3.2.1.3 BellSouth will select, purchase, install, and maintain a central office POTS splitter and provide Talk America access to data ports on the splitter. The splitter will route the High Frequency Spectrum on the circuit to Talk America's xDSL equipment in Talk America's collocation space. At least 30 days before making a change in splitter suppliers, BellSouth will provide Talk America with a carrier notification letter, informing Talk America of change. Talk America shall purchase ports on the splitter in increments of 24 ports.

3.2.1.4 BellSouth will install the splitter in (i) a common area close to Talk America's collocation area, if possible; or (ii) in a BellSouth relay rack as close to Talk America's DS0 termination point as possible. Talk America shall have access to the splitter for test purposes, regardless of where the splitter is placed in the

BellSouth premises. For purposes of this section, a common area is defined as an area in the central office in which both Parties have access to a common test access point. A Termination Point is defined as the point of termination for Talk America on the toll main distributing frame in the central office and is not the demarcation point set forth in Attachment 4 of this Agreement. BellSouth will cross-connect the splitter data ports to a specified Talk America DS0 at such time that a Talk America end user's service is established.

3.2.1.5 The High Frequency Spectrum shall only be available on Loops on which BellSouth is also providing, and continues to provide, analog voice service directly to the end user. In the event the end-user terminates its BellSouth provided voice service for any reason, or in the event BellSouth disconnects the end user's voice service pursuant to its tariffs or applicable law, and Talk America desires to continue providing xDSL service on such Loop, Talk America shall be required to purchase a full stand-alone Loop unbundled network element. To the extent commercially practicable, BellSouth shall give Talk America notice in a reasonable time prior to disconnect, which notice shall give Talk America an adequate opportunity to notify BellSouth of its intent to purchase such Loop. In those cases in which BellSouth no longer provides voice service to the end user and Talk America purchases the full stand-alone Loop, Talk America may elect the type of loop it will purchase. Talk America will pay the appropriate recurring and non-recurring rates for such Loop as set forth in Exhibit B to this Attachment. In the event Talk America purchases a voice grade Loop, Talk America acknowledges that such Loop may not remain xDSL compatible.

3.2.1.6 Only one competitive local exchange carrier shall be permitted access to the High Frequency Spectrum of any particular loop.

3.2.2 **Ordering**

3.2.2.1 BellSouth will provide Talk America the Local Service Request ("LSR") format to be used when ordering the High Frequency Spectrum.

3.2.2.2 BellSouth will return a manual Firm Order Confirmation ("FOC") in no more than two (2) business days after receipt of a valid, error free manual LSR. When Talk America submits an electronic LSR for High Frequency Spectrum, BellSouth will return a FOC in four (4) hours ninety-five percent (95%) of the time, or, for orders that do not flow-through, in two (2) business days. BellSouth will provide Talk America with access to the High Frequency Spectrum at the following target intervals:

3.2.2.2.1 For 1-5 lines at the same address within three (3) business days from BellSouth's issuance of a FOC; 6-10 lines at same address within 5 business days from BellSouth's issuance of a FOC; and more than 10 lines at the same address is to be negotiated.

3.2.2.2.2 BellSouth will provide to Talk America BellSouth's Loop Qualification System that BellSouth uses to qualify loops for its own ADSL offering.

3.2.2.2.3 BellSouth will provide Talk America access to Preordering Loop Makeup (LMU), in accordance with the terms of this Agreement. BellSouth shall bill and Talk America shall pay the rates for such services, as described in Exhibit B.

3.2.2.2.4 BellSouth shall test the data portion of the loop to ensure the continuity of the wiring for Talk America's data.

3.2.3 **Maintenance and Repair**

3.2.3.1 Talk America shall have access for repair and maintenance purposes, to any loop for which it has access to the High Frequency Spectrum. Talk America may access the loop at the point where the combined voice and data signal exits the central office splitter.

3.2.3.2 BellSouth will be responsible for repairing voice services and the physical line between the network interface device at the customer's premises and the Termination Point. Talk America will be responsible for repairing data services. Each Party will be responsible for maintaining its own equipment.

3.2.3.3 Talk America shall inform its end users to direct data problems to Talk America, unless both voice and data services are impaired, in which event the end users should call BellSouth.

3.2.3.4 Once a Party has isolated a trouble to the other Party's portion of the loop, the Party isolating the trouble shall notify the end user that the trouble is on the other Party's portion of the Loop.

3.2.3.5 In the event Talk America's deployment of xDSL on the High Frequency Spectrum significantly degrades the performance of other advanced services or of BellSouth's voice service on the same loop, BellSouth shall notify Talk America and allow twenty-four (24) hours to cure the trouble. If Talk America fails to resolve the trouble, BellSouth may discontinue Talk America's access to the High Frequency Spectrum on such loop.

3.2.4 **Line Splitting**.

3.2.4.1 BellSouth will work cooperatively with CLECs to develop rates, methods and procedures to operationalize a process whereby two CLECs, one being a provider of voice services (a "Voice CLEC") and the other being a provider of data services (a "Data CLEC") may provide services over the same loop. The loop and port over which the services are provided cannot be a loop and port combination (i.e., UNE-P), but must be individual, stand alone network elements. The Voice CLEC or the Data CLEC shall be responsible for connecting the loop and port to a CLEC-owned splitter. BellSouth shall not own or maintain the splitter used for

this purpose. When such rates, methods and procedures have been developed and operationalized, then at the request of Talk America, the Parties shall amend this Agreement to incorporate the same.

4. Local Switching

4.1 BellSouth shall provide non-discriminatory access to local circuit switching capability and local tandem switching capability on an unbundled basis, except as set forth in the Sections below to Talk America for the provision of a telecommunications service. BellSouth shall provide non-discriminatory access to packet switching capability on an unbundled basis to Talk America for the provision of a telecommunications service only in the limited circumstance described below in Section 4.5.

4.2 **Local Circuit Switching Capability, including Tandem Switching Capability**

4.2.1 Local circuit switching capability is defined as: (A) line-side facilities, which include, but are not limited to, the connection between a loop termination at a main distribution frame and a switch line card; (B) trunk-side facilities, which include, but are not limited to, the connection between trunk termination at a trunk-side cross-connect panel and a switch trunk card; (C) switching provided by remote switching modules; and (D) all features, functions, and capabilities of the switch, which include, but are not limited to: (1) the basic switching function of connecting lines to lines, line to trunks, trunks to lines, and trunks to trunks, as well as the same basic capabilities made available to BellSouth's customers, such as a telephone number, white page listings, and dial tone; and (2) all other features that the switch is capable of providing, including but not limited to customer calling, customer local area signaling service features, and Centrex, as well as any technically feasible customized routing functions provided by the switch. Any features that are not currently available but are technically feasible through the switch can be requested through the BFR/NBR process.

4.2.2 Notwithstanding BellSouth's general duty to unbundle local circuit switching, BellSouth shall not be required to unbundle local circuit switching for Talk America when Talk America serves an end-user with four (4) or more voice-grade (DS-0) equivalents or lines served by BellSouth in one of the following MSAs: Atlanta, GA; Miami, FL; Orlando, FL; Ft. Lauderdale, FL; Charlotte-Gastonia-Rock Hill, NC; Greensboro-Winston Salem-High Point, NC; Nashville, TN; and New Orleans, LA, and BellSouth has provided non-discriminatory cost based access to the Enhanced Extended Link (EEL) throughout Density Zone 1 as determined by NECA Tariff No. 4 as in effect on January 1, 1999.

4.2.3 In the event that Talk America orders local circuit switching for an end user with four (4) or more 2-wire voice-grade loops from a BellSouth central office in an MSA listed above, BellSouth shall charge Talk America the market based rates in

Exhibit B for use of the local circuit switching functionality for the affected facilities.

4.2.4 Unbundled Local Switching consists of three separate unbundled elements: Unbundled Ports, End Office Switching Functionality, and End Office Interoffice Trunk Ports.

4.2.5 Unbundled Local Switching combined with Common Transport and, if necessary, Tandem Switching provides to Talk America's end user local calling and the ability to presubscribe to a primary carrier for intraLATA and/or to presubscribe to a primary carrier for interLATA toll service.

4.2.6 Provided that Talk America purchases unbundled local switching from BellSouth and uses the BellSouth CIC for its end users' LPIC or if a BellSouth local end user selects BellSouth as its LPIC, then the Parties will consider as local any calls originated by an Talk America local end user, or originated by a BellSouth local end user and terminated to an Talk America local end user, where such calls originate and terminate in the same LATA, except for those calls originated and terminated through switched access arrangements (i.e., calls that are transported by a party other than BellSouth). For such calls, BellSouth will charge Talk America the UNE elements for the BellSouth facilities utilized. Neither Party shall bill the other originating or terminating switched access charges for such calls. Intercarrier compensation for local calls between BellSouth and Talk America shall be as described in BellSouth's UNE Local Call Flows set forth on BellSouth's web site.

4.2.7 BellSouth shall assess Talk America retroactive charges for UNE transport and switching associated with using the BellSouth LPIC if Talk America has been able to previously select BellSouth as the end user LPIC prior to the option allowing the selection of a BellSouth provided LATA-wide local calling area being offered.

4.2.8 Where Talk America purchases unbundled local switching from BellSouth but does not use the BellSouth CIC for its end users' LPIC, BellSouth will consider as local those direct dialed telephone calls that originate from an Talk America end user and terminate within the basic local calling area or within the extended local calling areas and that are dialed using 7 or 10 digits as defined and specified in Section A3 of BellSouth's General Subscriber Services Tariffs. For such local calls, BellSouth will charge Talk America the UNE elements for the BellSouth facilities utilized. Intercarrier compensation for local calls between BellSouth and Talk America shall be as described in BellSouth's UNE Local Call Flows set forth on BellSouth's web site.

4.2.9 For any calls that originate and terminate through switched access arrangements (i.e., calls that are transported by a party other than BellSouth), BellSouth shall bill Talk America the UNE elements for the BellSouth facilities utilized. Each Party

may bill the toll provider originating or terminating switched access charges, as appropriate.

4.2.10 Reverse billed toll calls, such as intraLATA 800 calls, calling card calls and third party billed calls, where BellSouth is the carrier shall also be considered as local calls and Talk America shall not bill BellSouth originating or terminating switched access for such calls.

4.2.11 **Unbundled Port Features**

4.2.11.1 Charges for Unbundled Port are as set forth in Exhibit B, and as specified in such exhibit, may or may not include individual features.

4.2.11.2 Where applicable and available, non-switch-based services may be ordered with the Unbundled Port at BellSouth's retail rates.

4.2.11.3 Any features that are not currently available but are technically feasible through the switch can be requested through the BFR/NBR process.

4.2.11.4 BellSouth will provide to Talk America selective routing of calls to a requested Operator System platform pursuant to Section 10 of Attachment 2. Any other routing requests by Talk America will be made pursuant to the BFR/NBR Process as set forth in General Terms and Conditions.

4.2.12 **Provision for Local Switching**

4.2.12.1 BellSouth shall perform routine testing (e.g., Mechanized Loop Tests (MLT) and test calls such as 105, 107 and 108 type calls) and fault isolation on a mutually agreed upon schedule.

4.2.12.2 BellSouth shall control congestion points such as those caused by radio station call-ins, and network routing abnormalities. All traffic shall be restricted in a non-discriminatory manner.

4.2.12.3 BellSouth shall perform manual call trace and permit customer originated call trace. BellSouth shall provide Switching Service Point (SSP) capabilities and signaling software to interconnect the signaling links destined to the Signaling Transfer Point Switch (STPS). These capabilities shall adhere to the technical specifications set forth in the applicable industry standard technical references.

4.2.12.4 BellSouth shall provide interfaces to adjuncts through Telcordia standard interfaces. These adjuncts can include, but are not limited to, the Service Circuit Node and Automatic Call Distributors. BellSouth shall offer to Talk America all AIN triggers in connection with its SMS/SCE offering.

4.2.12.5 BellSouth shall provide access to SS7 Signaling Network or Multi-Frequency trunking if requested by Talk America.

4.2.13 **Local Switching Interfaces**.

4.2.13.1 Talk America shall order ports and associated interfaces compatible with the services it wishes to provide, as listed in Exhibit B. BellSouth shall offer Local Switching that provides switched based feature offerings at parity to those provided by BellSouth to itself or any other Party. BellSouth shall provide the following local switching interfaces:

4.2.13.1.1 Standard Tip/Ring interface including loopstart or groundstart, on-hook signaling (e.g., for calling number, calling name and message waiting lamp);

4.2.13.1.2 Coin phone signaling;

4.2.13.1.3 Basic Rate Interface ISDN adhering to appropriate Telcordia Technical Requirements;

4.2.13.1.4 Two-wire analog interface to PBX;

4.2.13.1.5 Four-wire analog interface to PBX;

4.2.13.1.6 Four-wire DS1 interface to PBX or customer provided equipment (e.g. computers and voice response systems);

4.2.13.1.7 Primary Rate ISDN to PBX adhering to ANSI standards Q.931, Q.932 and appropriate Telcordia Technical Requirements;

4.2.13.1.8 Switched Fractional DS1 with capabilities to configure Nx64 channels (where N = 1 to 24); and

4.2.13.1.9 Loops adhering to Telcordia TR-NWT-08 and TR-NWT-303 specifications to interconnect Digital Loop Carriers.

4.2.13.2 Services required by law provided by BellSouth will include the following: related services for handicapped; Telephone Relay Service for the hearing impaired; soft dial tone where required by law and; any other service required by law.

4.3 **Tandem Switching**

4.3.1 The Tandem Switching capability Network Element is defined as: (i) trunk-connect facilities, which include, but are not limited to, the connection between trunk termination at a cross connect panel and switch trunk card; (ii) the basic switch trunk function of connecting trunks to trunks; and (iii) the functions that are centralized in the Tandem Switches (as distinguished from separate end office switches), including but not limited to call recording, the routing of calls to operator services and signaling conversion features.

4.3.2 Technical Requirements

4.3.2.1 Tandem Switching shall have the same capabilities or equivalent capabilities as those described in Telcordia TR-TSY-000540 Issue 2R2, Tandem Supplement, 6/1/90. The requirements for Tandem Switching include, but are not limited to the following:

4.3.2.1.1 Tandem Switching shall provide signaling to establish a tandem connection;

4.3.2.1.2 Tandem Switching will provide screening as jointly agreed to by Talk America and BellSouth;

4.3.2.1.3 Tandem Switching shall provide Advanced Intelligent Network triggers supporting AIN features where such routing is not available from the originating end office switch, to the extent such Tandem switch has such capability;

4.3.2.1.4 Tandem Switching shall provide access to Toll Free number database;

4.3.2.1.5 Tandem Switching shall provide connectivity to PSAPs where 911 solutions are deployed and the tandem is used for 911; and

4.3.2.1.6 Where appropriate, Tandem Switching shall provide connectivity for the purpose of routing transit traffic to and from other carriers.

4.3.2.2 BellSouth may perform testing and fault isolation on the underlying switch that is providing Tandem Switching. Such testing shall be testing routinely performed by BellSouth. The results and reports of the testing shall be made available to Talk America.

4.3.2.3 BellSouth shall control congestion points and network abnormalities. All traffic will be restricted in a non-discriminatory manner.

4.3.2.4 Tandem Switching shall process originating toll-free traffic received from Talk America's local switch.

4.3.2.5 In support of AIN triggers and features, Tandem Switching shall provide SSP capabilities when these capabilities are not available from the Local Switching Network Element, to the extent such Tandem Switch has such capability.

4.3.3 Upon Talk America's purchase of overflow trunk groups, Tandem Switching shall provide an alternate routing pattern for Talk America's traffic overflowing from direct end office high usage trunk groups.

4.4 **AIN Selective Carrier Routing for Operator Services, Directory Assistance and Repair Centers**

4.4.1 BellSouth will provide AIN Selective Carrier Routing at the request of Talk America. AIN Selective Carrier Routing will provide Talk America with the capability of routing operator calls, 0+ and 0- and 0+ NPA (LNPA) 555-1212

directory assistance, 1+411 directory assistance and 611 repair center calls to pre-selected destinations.

4.4.2 Talk America shall order AIN Selective Carrier Routing through its Account Team. AIN Selective Carrier Routing must first be established regionally and then on a per central office, per state basis.

4.4.3 AIN Selective Carrier Routing is not available in DMS 10 switches.

4.4.4 Where AIN Selective Carrier Routing is utilized by Talk America, the routing of Talk America's end user calls shall be pursuant to information provided by Talk America and stored in BellSouth's AIN Selective Carrier Routing Service Control Point database. AIN Selective Carrier Routing shall utilize a set of Line Class Codes (LCCs) unique to a basic class of service assigned on an 'as needed' basis. The same LCCs will be assigned in each central office where AIN Selective Carrier Routing is established.

4.4.5 Upon ordering of AIN Selective Carrier Routing Regional Service, Talk America shall remit to BellSouth the Regional Service Order non-recurring charges set forth in Exhibit B of this Attachment. There shall be a non-recurring End Office Establishment Charge per office due at the addition of each central office where AIN Selective Carrier Routing will be utilized. Said non-recurring charge shall be as set forth in Exhibit B of this Attachment. For each Talk America end user activated, there shall be a non-recurring End User Establishment charge as set forth in Exhibit B of this Attachment. Talk America shall pay the AIN Selective Carrier Routing Per Query Charge set forth in Exhibit B of this Attachment.

4.4.6 This Regional Service Order non-recurring charge will be non-refundable and will be paid with 1/2 due up-front with the submission of all fully completed required forms, including: Regional Selective Carrier Routing (SCR) Order Request-Form A, Central Office AIN Selective Carrier Routing (SCR) Order Request - Form B, AIN_SCR Central Office Identification Form - Form C, AIN_SCR Routing Options Selection Form - Form D, and Routing Combinations Table - Form E. BellSouth has 30 days to respond to Talk America's fully completed firm order as a Regional Service Order. With the delivery of this firm order response to Talk America, BellSouth considers that the delivery schedule of this service commences. The remaining 1/2 of the Regional Service Order payment must be paid when at least 90% of the Central Offices listed on the original order have been turned up for the service.

4.4.7 The non-recurring End Office Establishment Charge will be billed to Talk America following BellSouth's normal monthly billing cycle for this type of order.

4.4.8 End-User Establishment Orders will not be turned-up until the second payment is received for the Regional Service Order. The non-recurring End-User

Establishment Charges will be billed to Talk America following BellSouth's normal monthly billing cycle for this type of order.

4.4.9 Additionally, the AIN Selective Carrier Routing Per Query Charge will be billed to Talk America following the normal billing cycle for per query charges.

4.4.10 All other network components needed, for example, unbundled switching and unbundled local transport, etc, will be billed per contracted rates.

4.5 **Packet Switching Capability**

4.5.1 The packet switching capability network element is defined as the function of routing or forwarding packets, frames, cells or other data units based on address or other routing information contained in the packets, frames, cells or other data units.

4.5.2 BellSouth shall be required to provide non-discriminatory access to unbundled packet switching capability only where each of the following conditions are satisfied:

4.5.2.1 BellSouth has deployed digital loop carrier systems, including but not limited to, integrated digital loop carrier or universal digital loop carrier systems; or has deployed any other system in which fiber optic facilities replace copper facilities in the distribution section (e.g., end office to remote terminal, pedestal or environmentally controlled vault);

4.5.2.2 There are no spare copper loops capable of supporting the xDSL services Talk America seeks to offer;

4.5.2.3 BellSouth has not permitted Talk America to deploy a DSLAM at the remote terminal, pedestal or environmentally controlled vault or other interconnection point, nor has Talk America obtained a virtual collocation arrangement at these sub-loop interconnection points as defined by 47 CFR § 51.319 (b); and

4.5.2.4 BellSouth has deployed packet switching capability for its own use.

4.5.3 If there is a dispute as to whether BellSouth must provide Packet Switching, such dispute will be resolved according to the dispute resolution process set forth in Section 12 of the General Terms and Conditions of this Agreement, incorporated herein by this reference.

4.6 **Interoffice Transmission Facilities**

4.6.1 BellSouth shall provide nondiscriminatory access, in accordance with FCC Rule 51.311 and Section 251(c)(3) of the Act, to interoffice transmission facilities on an unbundled basis to Talk America for the provision of a telecommunications service.

5. Unbundled Network Element Combinations

5.1 Unbundled Network Element Combinations shall include: 1) Enhanced Extended Links (EELs); 2) Other Non-Switched Combinations; 3) UNE Loop/Special Access Combinations; and 4) UNE Loop/Port Combinations.

5.2 For purposes of this Section, references to "Currently Combined" network elements shall mean that such network elements are in fact already combined by BellSouth in the BellSouth network to provide service to a particular end user at a particular location.

5.3 **Enhanced Extended Links (EELs)**

5.3.1 Where facilities permit and where necessary to comply with an effective FCC and/or State Commission order, or as otherwise mutually agreed by the Parties, BellSouth shall offer access to loop and transport combinations, also known as the Enhanced Extended Link ("EEL") as defined in Section 5.3.2 below.

5.3.2 Subject to Section 5.3.3 below, BellSouth will provide access to the EEL in the combinations set forth in Section 5.3.4 following. Talk America shall provide to BellSouth a letter certifying that Talk America is providing a significant amount of local exchange service (as described in Sections 5.3.5.2, 5.3.5.3, 5.3.5.4, or 5.3.5.5) over such combinations. This offering is intended to provide connectivity from an end user's location through that end user's SWC to Talk America's POP serving wire center. The circuit must be connected to Talk America's switch for the purpose of provisioning telephone exchange service to Talk America's end-user customers. The EEL will be connected to Talk America's facilities in Talk America's collocation space at the POP SWC, or Talk America may purchase BellSouth's access facilities between Talk America's POP and Talk America's collocation space at the POP SWC.

5.3.3 BellSouth shall provide EEL combinations to Talk America in Georgia, Kentucky, Louisiana, Mississippi, South Carolina and Tennessee regardless of whether or not such EELs are Currently Combined. In all other states, BellSouth shall make available to Talk America those EEL combinations described in Section 5.3.4 below only to the extent such combinations are Currently Combined. Furthermore, BellSouth will make available new EEL combinations to Talk America in density Zone 1, as defined in 47 CFR 69.123 as of January 1, 1999, in the Atlanta, GA; Miami, FL; Orlando, FL; Ft. Lauderdale, FL; Charlotte-Gastonia-Rock Hill, NC; Greensboro-Winston Salem-High Point, NC; Nashville, TN; and New Orleans, LA, MSAs. Except as stated above, EELs will be provided to Talk America only to the extent such network elements are Currently Combined.

5.3.4 **EEL Combinations**

5.3.4.1 DS1 Interoffice Channel + DS1 Channelization + 2-wire VG Local Loop

5.3.4.2 DS1 Interoffice Channel + DS1 Channelization + 4-wire VG Local Loop

5.3.4.3 DS1 Interoffice Channel + DS1 Channelization + 2-wire ISDN Local Loop

5.3.4.4 DS1 Interoffice Channel + DS1 Channelization + 4-wire 56 kbps Local Loop

5.3.4.5 DS1 Interoffice Channel + DS1 Channelization + 4-wire 64 kbps Local Loop

5.3.4.6 DS1 Interoffice Channel + DS1 Local Loop

5.3.4.7 DS3 Interoffice Channel + DS3 Local Loop

5.3.4.8 STS-1 Interoffice Channel + STS-1 Local Loop

5.3.4.9 DS3 Interoffice Channel + DS3 Channelization + DS1 Local Loop

5.3.4.10 STS-1 Interoffice Channel + DS3 Channelization + DS1 Local Loop

5.3.4.11 2-wire VG Interoffice Channel + 2-wire VG Local Loop

5.3.4.12 4wire VG Interoffice Channel + 4-wire VG Local Loop

5.3.4.13 4-wire 56 kbps Interoffice Channel + 4-wire 56 kbps Local Loop

5.3.4.14 4-wire 64 kbps Interoffice Channel + 4-wire 64 kbps Local Loop

5.3.5 **Special Access Service Conversions**

5.3.5.1 Talk America may not convert special access services to combinations of loop and transport network elements, whether or not Talk America self-provides its entrance facilities (or obtains entrance facilities from a third party), unless Talk America uses the combination to provide a significant amount of local exchange service, in addition to exchange access service, to a particular customer. To the extent Talk America requests to convert any special access services to combinations of loop and transport network elements at UNE prices, Talk America shall provide to BellSouth a letter certifying that Talk America is providing a significant amount of local exchange service (as described in this Section) over such combinations. The certification letter shall also indicate under what local usage option Talk America seeks to qualify for conversion of special access circuits. Talk America shall be deemed to be providing a significant amount of local exchange service over such combinations if one of the following options is met:

5.3.5.2 Talk America certifies that it is the exclusive provider of an end user's local exchange service. The loop-transport combinations must terminate at Talk America's collocation arrangement in at least one BellSouth central office. This option does not allow loop-transport combinations to be connected to BellSouth's tariffed services. Under this option, Talk America is the end user's only local

service provider, and thus, is providing more than a significant amount of local exchange service. Talk America can then use the loop-transport combinations that serve the end user to carry any type of traffic, including using them to carry 100 percent interstate access traffic; or

5.3.5.3 Talk America certifies that it provides local exchange and exchange access service to the end user customer's premises and handles at least one third of the end user customer's local traffic measured as a percent of total end user customer local dialtone lines; and for DS1 circuits and above, at least 50 percent of the activated channels on the loop portion of the loop-transport combination have at least 5 percent local voice traffic individually, and the entire loop facility has at least 10 percent local voice traffic. When a loop-transport combination includes multiplexing, each of the individual DS1 circuits must meet these criteria. The loop-transport combination must terminate at Talk America's collocation arrangement in at least one BellSouth central office. This option does not allow loop-transport combinations to be connected to BellSouth tariffed services; or

5.3.5.4 Talk America certifies that at least 50 percent of the activated channels on a circuit are used to provide originating and terminating local dialtone service and at least 50 percent of the traffic on each of these local dialtone channels is local voice traffic, and that the entire loop facility has at least 33 percent local voice traffic. When a loop-transport combination includes multiplexing, each of the individual DS1 circuits must meet these criteria. This option does not allow loop-transport combinations to be connected to BellSouth's tariffed services. Under this option, collocation is not required. Talk America does not need to provide a defined portion of the end user's local service, but the active channels on any loop-transport combination, and the entire facility, must carry the amount of local exchange traffic specified in this option.

5.3.5.5 In addition, there may be extraordinary circumstances where Talk America is providing a significant amount of local exchange service, but does not qualify under any of the three options set forth in Section 5.3.5. In such case, Talk America may petition the FCC for a waiver of the local usage options set forth in the June 2, 2000 Order. If a waiver is granted, then upon Talk America's request the Parties shall amend this Agreement to the extent necessary to incorporate the terms of such waiver for such extraordinary circumstance.

5.3.5.6 BellSouth may at its sole discretion audit Talk America records in order to verify the type of traffic being transmitted over combinations of loop and transport network elements. The audit shall be conducted by a third party independent auditor, and Talk America shall be given thirty days written notice of scheduled audit. Such audit shall occur no more than one time in a calendar year, unless results of an audit find noncompliance with the significant amount of local exchange service requirement. In the event of noncompliance, Talk America shall reimburse BellSouth for the cost of the audit. If, based on its audits, BellSouth concludes that Talk America is not providing a significant amount of local

exchange traffic over the combinations of loop and transport network elements, BellSouth may file a complaint with the appropriate Commission, pursuant to the dispute resolution process as set forth in the Interconnection Agreement. In the event that BellSouth prevails, BellSouth may convert such combinations of loop and transport network elements to special access services and may seek appropriate retroactive reimbursement from Talk America.

5.3.5.7 Talk America may convert special access circuits to combinations of loop and transport UNEs pursuant to the terms of this Section and subject to the termination provisions in the applicable special access tariffs, if any.

5.3.6 **Rates**

5.3.6.1 Georgia, Kentucky, Louisiana, Mississippi, South Carolina and Tennessee

5.3.6.1.1 The non-recurring and recurring rates for the EEL Combinations of network elements set forth in 5.3.4, whether Currently Combined or new, are as set forth in Exhibit B of this Attachment.

5.3.6.1.2 For combinations of loop and transport network elements not set forth in Section 5.3.4, where the elements are not Currently Combined but are ordinarily combined in BellSouth's network, the non-recurring and recurring charges for such UNE combinations shall be the sum of the stand-alone non-recurring and recurring charges of the network elements which make up the combination.

5.3.6.1.3 To the extent that Talk America seeks to obtain other combinations of network elements that BellSouth ordinarily combines in its network which have not been specifically priced by the Commission when purchased in combined form, Talk America, at its option, can request that such rates be determined pursuant to the BFR/NBR process set forth in this Agreement.

5.3.6.2 All Other States

5.3.6.2.1 Subject to the preceding sections, for all other states, the non-recurring and recurring rates for the Currently Combined EEL combinations set forth in Section 5.3.4 and other Currently Combined network elements will be the sum of the recurring rates for the individual network elements plus a non recurring charge set forth in Exhibit B of this Attachment.

5.3.7 **Multiplexing**

5.3.7.1 Where multiplexing functionality is required in connection with loop and transport combinations, such multiplexing will be provided at the rates and on the terms set forth in this Agreement.

5.4 **Other Non-Switched Combinations**

5.4.1 In the states of Georgia, Kentucky, Louisiana, Mississippi, South Carolina and Tennessee, BellSouth shall make available to Talk America, in accordance with Section 5.4.2.1 below: (1) combinations of network elements other than EELs that are Currently Combined; and (2) combinations of network elements other than EELs that are not Currently Combined but that BellSouth ordinarily combines in its network. In all other states, BellSouth shall make available to Talk America, in accordance with Section 5.4.2.2 below, combinations of network elements other than EELs only to the extent such combinations are Currently Combined.

5.4.2 Rates

5.4.2.1 Georgia, Kentucky, Louisiana, Mississippi, South Carolina and Tennessee

5.4.2.1.1 The non-recurring and recurring rates for Other Network Element combinations, whether Currently Combined or new, are as set forth in Exhibit B of this Attachment.

5.4.2.1.2 For Other Network Element combinations where the elements are not Currently Combined but are ordinarily combined in BellSouth's network, the non-recurring and recurring charges for such UNE combinations shall be the sum of the stand-alone non-recurring and recurring charges of the network elements that make up the combination.

5.4.2.1.3 To the extent that Talk America seeks to obtain other combinations of network elements that BellSouth ordinarily combines in its network which have not been specifically priced by the Commission when purchased in combined form, Talk America, at its option, can request that such rates be determined pursuant to the BFR/NBR process set forth in this Agreement.

5.4.2.2 All Other States

5.4.2.2.1 For all other states, the non-recurring and recurring rates for the Other Network Element Combinations that are Currently Combined will be the sum of the recurring rates for the individual network elements plus a non-recurring charge set forth in Exhibit B of this Attachment.

5.5 **UNE Loop/Special Access Combinations**

5.5.1 BellSouth shall make available to Talk America a new combination of an unbundled loop and tariffed special access interoffice facilities. To the extent Talk America will require multiplexing functionality in connection with such combination, BellSouth will provide access to multiplexing within the central office pursuant to the terms, conditions and rates set forth in its Access Services Tariffs. The tariffed special access interoffice facilities and any associated tariffed services, including but not limited to multiplexing, shall not be eligible for conversion to UNEs as described in Section 5.3.5.

5.5.2 Rates

5.5.2.1 The non-recurring and recurring rates for UNE/Special Access Combinations will be the sum of the unbundled loop rates as set forth in Exhibit B and the interoffice transport rates and multiplexing rates as set forth in the Access Services Tariff.

5.6 **UNE Port/Loop Combinations**

5.6.1 Combinations of port and loop unbundled network elements along with switching and transport unbundled network elements provide local exchange service for the origination or termination of calls. Port/ loop combinations support the same local calling and feature requirements as described in the Unbundled Local Switching or Port section of this Attachment 2 and the ability to presubscribe to a primary carrier for intraLATA and/or to presubscribe to a primary carrier for interLATA toll service.

5.6.2 BellSouth shall make available Currently Combined and not Currently Combined UNE port/loop combinations.

5.6.2.1 Except as set forth in section 5.6.3 below, the rates at which BellSouth shall provide Currently Combined UNE port/loop combinations and not Currently Combined UNE port/loop combinations in the states of Georgia and Tennessee shall be the cost-based rates in Exhibit B.

5.6.2.2 The rates at which BellSouth shall provide not Currently Combined UNE port/loop combinations in Alabama, Florida, and North Carolina shall be the market rates in Exhibit B.

5.6.3 BellSouth is not required to provide combinations of port and loop network elements on an unbundled basis in locations where, pursuant to FCC rules, BellSouth is not required to provide circuit switching as an unbundled network element.

5.6.3.1 BellSouth shall not be required to provide local circuit switching as an unbundled network element in density Zone 1, as defined in 47 CFR 69.123 as of January 1, 1999 of the Atlanta, GA; Miami, FL; Orlando, FL; Ft. Lauderdale, FL; Charlotte-Gastonia-Rock Hill, NC; Greensboro-Winston Salem-High Point, NC; Nashville, TN; and New Orleans, LA, MSAs to Talk America if Talk America's customer has 4 or more DS0 equivalent lines.

5.6.3.2 Notwithstanding the foregoing, BellSouth shall provide combinations of port and loop network elements on an unbundled basis where, pursuant to FCC rules, BellSouth is not required to provide local circuit switching as an unbundled network element and shall do so at the market rates in Exhibit B.

5.6.4 For calls originated by Talk America's unbundled Coin port/loop combinations and terminated by BellSouth Telecommunications' intralata 800 numbers, BellSouth

shall credit Talk America's billing account for dial around compensation. Talk America shall pass such compensation to the payphone service provider it serves.

5.6.5 When Talk America orders loop/port combinations, and identifies to BellSouth the type of telecommunications service it intends to deliver to its end user customer through that combination (e.g., POTS, ISDN), BellSouth will provide the requested elements with all the functionality, and with at least the same quality of performance and operations systems support (ordering, provisioning, maintenance, billing and recording), that BellSouth provides through its own network to its local exchange service customers receiving equivalent service, unless Talk America desires a lesser or greater quality of performance that may be requested through the Bona Fide Request process. For example, loop/ port combinations ordered by Talk America for POTS service will include, without limitation, MLT testing, real time due date assignment, dispatch scheduling via the offered interfaces in attachment 6, service turn-up without interruption of customer service, and speed and quality of maintenance, at parity with BellSouth's delivery of service to its POTS customers served through equivalent BellSouth loop and switch ports. BellSouth will provide ordering, provisioning and maintenance services at parity with the same services BellSouth provides to it's own end users or resold services as measured in Attachment 9 Performance Measures.

5.6.6 Combination Offerings

5.6.5.1 2-wire voice grade port, voice grade loop, unbundled end office switching, unbundled end office trunk port, common transport per mile per MOU, common transport facilities termination, tandem switching, and tandem trunk port.

5.6.5.2 2-wire voice grade Coin port, voice grade loop, unbundled end office switching, unbundled end office trunk port, common transport per mile per MOU, common transport facilities termination, tandem switching, and tandem trunk port.

5.6.5.3 2-wire voice grade DID port, voice grade loop, unbundled end office switching, unbundled end office trunk port, common transport per mile per MOU, common transport facilities termination, tandem switching, and tandem trunk port.

5.6.5.4 2-wire CENTREX port, voice grade loop, unbundled end office switching, unbundled end office trunk port, common transport per mile per MOU, common transport facilities termination, tandem switching, and tandem trunk port.

5.6.5.5 2-wire ISDN Basic Rate Interface, voice grade loop, unbundled end office switching, unbundled end office trunk port, common transport per mile per MOU, common transport facilities termination, tandem switching, and tandem trunk port.

5.6.5.6 4-wire ISDN Primary Rate Interface, DS1 loop, unbundled end office switching, unbundled end office trunk port, common transport per mile per MOU, common transport facilities termination, tandem switching, and tandem trunk port.

5.6.5.7 4-wire DS1 Trunk port, DS1 Loop, unbundled end office switching, unbundled end office trunk port, common transport per mile per MOU, common transport facilities termination, tandem switching, and tandem trunk port.

5.6.5.8 4-wire DS1 Loop with normal serving wire center channelization interface, 2-wire voice grade ports (PBX), 2-wire DID ports, unbundled end office switching, unbundled end office trunk port, common transport per mile per MOU, common transport facilities termination, tandem switching, and tandem trunk port.

5.6.4.9 Provided that the electronic ordering OSS utilized by Talk America is unable to accept Talk America's valid, error free local service requests (LSRs) for loop and port combinations (UNE-P), but such OSS is capable of accepting Talk America's resale LSRs, and provided further that the requirements and limitations of Sections 5.6.4.9.1 through 5.6.4.9.6 are met, BellSouth shall allow Talk America to place electronic LSRs for resale services, and subject to the following provisions, Talk America will be eligible for certain credits as set forth herein.

5.6.4.9.1 Talk America's inability to submit electronic LSRs for UNE-P must be due solely to a system failure or defect on BellSouth's side of the interface, and neither Talk America nor its systems or interface shall have contributed to such failure or defect. Further, Talk America's inability to submit such LSRs shall not be the result of Talk America's failure to follow BellSouth's business rules for ordering or failure to submit a valid and correct LSR.

5.6.4.9.2 The failure or defect in BellSouth's OSS must affect Talk America's ability only to place UNE-P LSRs. Entire system outages, failures or defects resulting in an inability to place any electronic orders shall not cause this Section to be invoked.

5.6.4.9.3 Talk America shall notify BellSouth's Electronic Communications (EC) Support organization upon its discovery of an OSS failure or defect described in Sections 5.6.4.9.1 and 5.6.4.9.2 above. Talk America shall report the failure or defect to the EC Support organization with as much specificity as possible, and shall work cooperatively with EC Support to correct the failure or defect.

5.6.4.9.4 In the event BellSouth is unable to correct the failure or defect within 12 hours of the time Talk America notified BellSouth of the same (excluding Sundays and nationally recognized holidays), Talk America may commence submission of electronic LSRs for the resale services that correspond to the UNE-P services Talk America intended to order. Talk America may continue to submit such resale LSRs until such time as BellSouth corrects the failure or defect and Talk America again has the capability to submit UNE-P LSRs. During the period in which Talk America is placing orders for resale pursuant to this Section, at the end of each business day, Talk America shall submit to its Customer Support Manager (CSM) a list of Purchase Order Numbers (PONs) for each resale LSR submitted that day that Talk America would have submitted as a UNE-P LSR absent the system

failure or defect. BellSouth shall bill Talk America for the resale services so ordered in accordance with the terms of Attachment 1 of this Agreement.

5.6.4.9.5 When electronic UNE-P ordering capability is restored, Talk America shall submit electronic LSRs to convert to UNE-P, on a switch as is basis, the resale services ordered during the OSS failure or defect. Such conversions effected pursuant to this Section shall apply only to conversions of those resale services corresponding to a PON submitted by Talk America to its (CSM) pursuant to Section 5.6.4.9.4. BellSouth shall credit Talk America in an amount equal to the difference between the non-recurring and recurring charges assessed to Talk America for resale and the non-recurring and recurring charges that would have been assessed if Talk America would have ordered UNE-P on the original LSR. BellSouth shall waive the conversion charges and OSS charges associated with the conversion of such services from resale to UNE-P. As of the date of completion of the conversion, BellSouth will bill such services at the applicable UNE-P rates. Talk America agrees that it will submit LSRs to convert such resale services within thirty (30) days after electronic UNE-P ordering capability resumes.

5.6.4.9.6 BellSouth reserves the right to verify (1) that the system failure or defect in fact occurred and meets the requirements of Sections 5.6.4.9.1 and 5.6.4.9.2 above, and (2) that Talk America has followed the procedures set forth in this Section 5.6.4.9. In the event that all the requirements and limitations set forth herein have not been met, no waiver of charges shall be available to Talk America. In the event that the Parties are unable to agree as to whether the requirements and limitations have or have not been met, the Parties shall follow the Dispute Resolution process set forth in the General Terms and Conditions of this Agreement.

6 Transport, Channelization and Dark Fiber

6.6 <u>Transport</u>

6.6.3 Interoffice transmission facility network elements include:

6.6.3.1 Dedicated transport, defined as BellSouth's transmission facilities, is dedicated to a particular customer or carrier that provides telecommunications between wire centers or switches owned by BellSouth, or between wire centers and switches owned by BellSouth and Talk America.

6.6.3.2 Dark Fiber transport, defined as BellSouth's optical transmission facilities without attached signal regeneration, multiplexing, aggregation or other electronics;

6.6.3.3 Common (Shared) transport, defined as transmission facilities shared by more than one carrier, including BellSouth, between end office switches, between end office switches and tandem switches, and between tandem switches, in BellSouth's network. Where BellSouth Network Elements are connected by intraoffice wiring,

such wiring is provided as part of the Network Element and is not Common (Shared) Transport.

6.6.4 BellSouth shall:

6.6.4.1 Provide Talk America exclusive use of interoffice transmission facilities dedicated to a particular customer or carrier, or shared use of the features, functions, and capabilities of interoffice transmission facilities shared by more than one customer or carrier;

6.6.4.2 Provide all technically feasible transmission facilities, features, functions, and capabilities of the transport facility for the provision of telecommunications services;

6.6.4.3 Permit, to the extent technically feasible, Talk America to connect such interoffice facilities to equipment designated by Talk America, including but not limited to, Talk America's collocated facilities; and

6.6.4.4 Permit, to the extent technically feasible, Talk America to obtain the functionality provided by BellSouth's digital cross-connect systems.

6.6.5 Technical Requirements of Common (Shared) Transport

6.6.5.1 Common (Shared) Transport provided on DS1 or VT1.5 circuits, shall, at a minimum, meet the performance, availability, jitter, and delay requirements specified for Central Office to Central Office ("CO to CO") connections in the applicable industry standards.

6.6.5.2 Common (Shared) Transport provided on DS3 circuits, STS-1 circuits, and higher transmission bit rate circuits, shall, at a minimum, meet the performance, availability, jitter, and delay requirements specified for CO to CO connections in the applicable industry standards.

6.6.5.3 BellSouth shall be responsible for the engineering, provisioning, and maintenance of the underlying equipment and facilities that are used to provide Common (Shared) Transport.

6.6.5.4 At a minimum, Common (Shared) Transport shall meet all of the requirements set forth in the applicable industry standards.

6.7 **Dedicated Transport**

6.7.3 Dedicated Transport is composed of the following Unbundled Network Elements:

6.7.3.1 Unbundled Local Channel, defined as the dedicated transmission path between Talk America's Point of Presence("POP") and Talk America's collocation space in the BellSouth Serving Wire Center for Talk America's POP, and

6.7.3.2 Unbundled Interoffice Channel, defined as the dedicated transmission path that provides telecommunication between BellSouth's Serving Wire Centers' collocations.

6.7.3.3 BellSouth shall offer Dedicated Transport in each of the following ways:

6.7.3.3.1 As capacity on a shared UNE facility.

6.7.3.3.2 As a circuit (e.g., DS0, DS1, DS3) dedicated to Talk America.

6.7.3.4 Dedicated Transport may be provided over facilities such as optical fiber, copper twisted pair, and coaxial cable, and shall include transmission equipment such as, line terminating equipment, amplifiers, and regenerators.

6.7.4 Technical Requirements

6.7.4.1 The entire designated transmission service (e.g., DS0, DS1, DS3) shall be dedicated to Talk America designated traffic.

6.7.4.2 For DS1 or VT1.5 circuits, Dedicated Transport shall, at a minimum, meet the performance, availability, jitter, and delay requirements specified for Customer Interface to Central Office ("CI to CO") connections in the applicable industry standards.

6.7.4.3 For DS3 circuits, Dedicated Transport shall, at a minimum, meet the performance, availability, jitter, and delay requirements specified for CI to CO connections in the applicable industry standards.

6.7.4.4 BellSouth shall offer the following interface transmission rates for Dedicated Transport:

6.7.4.4.1 DS0 Equivalent;

6.7.4.4.2 DS1;

6.7.4.4.3 DS3; and

6.7.4.4.4 SDH (Synchronous Digital Hierarchy) Standard interface rates in accordance with International Telecommunications Union (ITU) Recommendation G.707 and Plesiochronous Digital Hierarchy (PDH) rates per ITU Recommendation G.704.

6.7.4.5 BellSouth shall design Dedicated Transport according to its network infrastructure. Talk America shall specify the termination points for Dedicated Transport.

6.7.4.6 At a minimum, Dedicated Transport shall meet each of the requirements set forth in the applicable industry technical references.

6.7.4.7 BellSouth Technical References:

6.7.4.7.1 TR-TSY-000191 Alarm Indication Signals Requirements and Objectives, Issue 1, May 1986.

6.7.4.7.2 TR 73501 LightGate® Service Interface and Performance Specifications, Issue D, June 1995.

6.7.4.7.3 TR 73525 MegaLink® Service, MegaLink Channel Service and MegaLink Plus Service Interface and Performance Specifications, Issue C, May 1996.

6.8 **Unbundled Channelization (Multiplexing)**

6.8.3 Unbundled Channelization (UC) provides the multiplexing capability that will allow a DS1 (1.544 Mbps) or DS3 (44.736 Mbps) or STS-1 Unbundled Network Element (UNE) or collocation cross-connect to be multiplexed or channelized at a BellSouth central office. Channelization will be offered with both the high and low speed sides to be connected to collocation. Channelization can be accomplished through the use of a stand-alone multiplexer or a digital cross-connect system at the discretion of BellSouth. Once UC has been installed, Talk America may request channel activation on an as-needed basis and BellSouth shall connect the requested facilities via Central Office Channel Interfaces (COCIs). The COCI must be compatible with the lower capacity facility and ordered with the lower capacity facility.

6.8.4 BellSouth shall make available the following channelization systems:

6.8.4.1 DS3 Channelization System: channelizes a DS3 signal into 28 DS1s/STS-1s.

6.8.4.2 DS1 Channelization System: channelizes a DS1 signal into 24 DS0s.

6.8.5 BellSouth shall make available the following

6.8.5.1 Central Office Channel Interfaces (COCI):

6.8.5.2 DS1 COCI, which can be activated on a DS3 Channelization System.

6.8.5.3 Voice Grade and Digital Data COCI, which can be activated on a DS1 Channelization System.

6.8.5.4 Data COCI, which can be activated on a DS1 Channelization System.

6.8.5.5 AMI and B8ZS line coding with either Super Frame (SF) and Extended Super Frame (ESF) framing formats will be supported as options.

6.8.6 Technical Requirements

6.8.6.1 In order to assure proper operation with BellSouth provided central office multiplexing functionality, Talk America's channelization equipment must adhere strictly to form and protocol standards. Talk America must also adhere to such applicable industry standards for the multiplex channel bank, for voice frequency encoding, for various signaling schemes, and for sub rate digital access.

6.8.6.2 DS0 to DS1 Channelization

6.8.6.2.1 The DS1 signal must be framed utilizing the framing structure defined in ANSI T1.107, Digital Hierarchy Formats Specifications and ANSI T1.403.02, DS1 Robbed-bit Signaling State Definitions.

6.8.6.3 DS1 to DS3 Channelization

6.8.6.3.1 The DS3 signal must be framed utilizing the framing structure define in ANSI T1.107, Digital Hierarchy Formats Specifications. The asynchronous M13 multiplex format (combination of M12 and M23 formats) is specified for terminal equipment that multiplexes 28 DS1s into a DS3.

6.8.6.4 DS1 to STS Channelization

6.8.6.4.1 The STS-1 signal must be framed utilizing the framing structure define in ANSI T1.105, Synchronous Optical Network (SONET) – Basic Description Including Multiplex Structure, Rates and Formats and T1.105.02, Synchronous Optical Network (SONET) – Payload Mappings.

6.9 **Dark Fiber Transport**

6.9.3 Dark Fiber Transport is an unused optical transmission facility without attached signal regeneration, multiplexing, aggregation or other electronics that connects two points within BellSouth's network. It may be strands of optical fiber existing in aerial or underground structure. BellSouth will not provide line terminating elements, regeneration or other electronics necessary for Talk America to utilize Dark Fiber Transport.

6.9.4 Dark Fiber Transport rates are differentiated between Local Channel, Interoffice Channel and Local Loop.

6.9.5 Requirements

6.9.5.1 BellSouth shall make available Dark Fiber Transport where it exists in BellSouth's network and where, as a result of future building or deployment, it becomes available. Dark Fiber Transport will not be deemed available if (1) it is used by BellSouth for maintenance and repair purposes, (2) it is designated for use pursuant to a firm order placed by another customer, (3) it is restricted for use by all carriers, including BellSouth, because of transmission problems or because it is scheduled for removal due to documented changes to roads and infrastructure, or

(4) BellSouth has plans to use the fiber within a two-year planning period. BellSouth is not required to place fibers for Dark Fiber Transport if there are none available.

6.9.5.2 If the requested Dark Fiber Transport has any lightwave repeater equipment interspliced to it, BellSouth will remove such equipment at Talk America's request subject to time and materials charges.

6.9.5.3 Talk America is solely responsible for testing the quality of the Dark Fiber Transport to determine its usability and performance specifications.

6.9.5.4 BellSouth shall use its best efforts to provide to Talk America information regarding the location, availability and performance of Dark Fiber Transport within ten (10) business days after receiving a request from Talk America. Within such time period, BellSouth shall send written confirmation of availability of the Dark Fiber Transport.

6.9.5.5 If the requested Dark Fiber Transport is available, BellSouth shall use its commercially reasonable efforts to provision the Dark Fiber Transport to Talk America within twenty (20) business days after Talk America submits a valid, error free LSR. Provisioning includes identification of appropriate connection points (e.g., Light Guide Interconnection (LGX) or splice points) to enable Talk America to connect or splice Talk America provided transmission media (e.g., optical fiber) or equipment to the Dark Fiber Transport.

6.9.5.6 Talk America may splice at the end points and test Dark Fiber Transport obtained from BellSouth using Talk America or Talk America designated personnel. BellSouth shall provide appropriate interfaces to allow splicing and testing of Dark Fiber Transport. For fiber in underground conduit, BellSouth shall provide a minimum of 25 feet of excess cable to allow the uncoiled fiber to reach from the manhole to a splicing van.

7 BellSouth Switched Access ("SWA") 8XX Toll Free Dialing Ten Digit Screening Service

7.6 The BellSouth SWA 8XX Toll Free Dialing Ten Digit Screening Service database ("8XX SCP Database") is a Signaling control Point ("SCP") that contains customer record information and the functionality to provide call-handling instructions for 8XX calls. The 8XX SCP IN software stores data downloaded from the national SMS/8XX database and provides the routing instructions in response to queries from the Switching Service Point ("SSP") or tandem. The BellSouth SWA 8XX Toll Free Dialing Ten Digit Screening Service ("8XX TFD Service") utilizes the 8XX SCP Database to provide identification and routing of the 8XX calls, based on the ten digits dialed. At Talk America's option, 8XX TFD Service is provided with or without POTS number delivery, dialing number delivery, and other optional complex features as selected by Talk America.

7.7 The 8XX SCP Database is designated to receive and respond to queries using the ANSI Specification of Signaling System Seven (SS7) protocol.

8 Line Information Database (LIDB)

8.6 The Line Information Database (LIDB) is a transaction-oriented database accessible through Common Channel Signaling (CCS) networks. For access to LIDB, Talk America must purchase appropriate signaling links pursuant to Section 9 of this Attachment. LIDB contains records associated with end user Line Numbers and Special Billing Numbers. LIDB accepts queries from other Network Elements and provides appropriate responses. The query originator need not be the owner of LIDB data. LIDB queries include functions such as screening billed numbers that provides the ability to accept Collect or Third Number Billing calls and validation of Telephone Line Number based non-proprietary calling cards. The interface for the LIDB functionality is the interface between BellSouth's CCS network and other CCS networks. LIDB also interfaces to administrative systems.

8.7 Technical Requirements

8.7.3 BellSouth will offer to Talk America any additional capabilities that are developed for LIDB during the life of this Agreement.

8.7.4 BellSouth shall process Talk America's Customer records in LIDB at least at parity with BellSouth customer records, with respect to other LIDB functions. BellSouth shall indicate to Talk America what additional functions (if any) are performed by LIDB in the BellSouth network.

8.7.5 Within two (2) weeks after a request by Talk America, BellSouth shall provide Talk America with a list of the customer data items, which Talk America would have to provide in order to support each required LIDB function. The list shall indicate which data items are essential to LIDB function, and which are required only to support certain services. For each data item, the list shall show the data formats, the acceptable values of the data item and the meaning of those values.

8.7.6 BellSouth shall provide LIDB systems for which operating deficiencies that would result in calls being blocked shall not exceed 30 minutes per year.

8.7.7 BellSouth shall provide LIDB systems for which operating deficiencies that would not result in calls being blocked shall not exceed 12 hours per year.

8.7.8 BellSouth shall provide LIDB systems for which the LIDB function shall be in overload no more than 12 hours per year.

8.7.9 All additions, updates and deletions of Talk America data to the LIDB shall be solely at the direction of Talk America. Such direction from Talk America will not be required where the addition, update or deletion is necessary to perform standard fraud control measures (e.g., calling card auto-deactivation).

8.7.10 BellSouth shall provide priority updates to LIDB for Talk America data upon Talk America's request (e.g., to support fraud detection)**,** via password-protected telephone card, facsimile, or electronic mail within one hour of notice from the established BellSouth contact.

8.7.11 BellSouth shall provide LIDB systems such that no more than 0.01% of Talk America customer records will be missing from LIDB, as measured by Talk America audits. BellSouth will audit Talk America records in LIDB against DBAS to identify record mismatches and provide this data to a designated Talk America contact person to resolve the status of the records and BellSouth will update system appropriately. BellSouth will refer record of mis-matches to Talk America within one business day of audit. Once reconciled records are received back from Talk America, BellSouth will update LIDB the same business day if less than 500 records are received before 1:00PM Central Time. If more than 500 records are received, BellSouth will contact Talk America to negotiate a time frame for the updates, not to exceed three business days.

8.7.12 BellSouth shall perform backup and recovery of all of Talk America's data in LIDB including sending to LIDB all changes made since the date of the most recent backup copy, in at least the same time frame BellSouth performs backup and recovery of BellSouth data in LIDB for itself. Currently, BellSouth performs backups of the LIDB for itself on a weekly basis and when a new software release is scheduled, a backup is performed prior to loading the new release.

8.7.13 BellSouth shall provide Talk America with LIDB reports of data, which are missing or contain errors, as well as any misrouted errors, within a reasonable time period as negotiated between Talk America and BellSouth.

8.7.14 BellSouth shall prevent any access to or use of Talk America data in LIDB by BellSouth personnel that are outside of established administrative and fraud control personnel, or by any other Party that is not authorized by Talk America in writing.

8.7.15 BellSouth shall provide Talk America performance of the LIDB Data Screening function, which allows a LIDB to completely or partially deny specific query originators access to LIDB data owned by specific data owners, for Customer Data that is part of an NPA-NXX or RAO-0/1XX wholly or partially owned by Talk America at least at parity with BellSouth Customer Data. BellSouth shall obtain from Talk America the screening information associated with LIDB Data Screening of Talk America data in accordance with this requirement. BellSouth currently does not have LIDB Data Screening capabilities. When such capability is available, BellSouth shall offer it to Talk America under the BFR/NBR process as set forth in Attachment 11.

8.7.16 BellSouth shall accept queries to LIDB associated with Talk America customer records, and shall return responses in accordance with industry standards.

8.7.17 BellSouth shall provide mean processing time at the LIDB within 0.50 seconds under normal conditions as defined in industry standards.

8.7.18 BellSouth shall provide processing time at the LIDB within 1 second for 99% of all messages under normal conditions as defined in industry standards.

8.8 Interface Requirements

8.8.3 BellSouth shall offer LIDB in accordance with the requirements of this subsection.

8.8.4 The interface to LIDB shall be in accordance with the technical references contained within.

8.8.5 The CCS interface to LIDB shall be the standard interface described herein.

8.8.6 The LIDB Data Base interpretation of the ANSI-TCAP messages shall comply with the technical reference herein. Global Title Translation shall be maintained in the signaling network in order to support signaling network routing to the LIDB.

9 Signaling

9.6 BellSouth shall offer access to signaling and access to BellSouth's signaling databases subject to compatibility testing and at the rates set forth in this Attachment. BellSouth may provide mediated access to BellSouth signaling systems and databases. Available signaling elements include signaling links, signal transfer points and service control points. Signaling functionality will be available with both A-link and B-link connectivity.

9.7 **Signaling Link Transport**

9.7.3 Signaling Link Transport is a set of two or four dedicated 56 kbps transmission paths between Talk America-designated Signaling Points of Interconnection that provide appropriate physical diversity.

9.7.4 Technical Requirements

9.7.5 Signaling Link Transport shall consist of full duplex mode 56 kbps transmission paths and shall perform in the following two ways:

9.7.5.1 As an "A-link" Signaling Link Transport is a connection between a switch or SCP and a home Signaling Transfer Point switch pair; and

9.7.5.2 As a "B-link" Signaling Link Transport is a connection between two Signaling Transfer Point switch pairs in different company networks (e.g., between two Signaling Transfer Point switch pairs for two CLECs).

9.7.6 Signaling Link Transport shall consist of two or more signaling link layers as follows:

9.7.6.1 An A-link layer shall consist of two links.

9.7.6.2 A B-link layer shall consist of four links.

9.7.6.3 A signaling link layer shall satisfy interoffice and intraoffice diversity of facilities and equipment, such that:

9.7.6.4 No single failure of facilities or equipment causes the failure of both links in an A-link layer (i.e., the links should be provided on a minimum of two separate physical paths end-to-end); and

9.7.6.5 No two concurrent failures of facilities or equipment shall cause the failure of all four links in a B-link layer (i.e., the links should be provided on a minimum of three separate physical paths end-to-end).

9.7.7 Interface Requirements

9.7.7.1 There shall be a DS1 (1.544 Mbps) interface at Talk America's designated SPOIs. Each 56 kbps transmission path shall appear as a DS0 channel within the DS1 interface.

9.8 **Signaling Transfer Points (STPs)**

9.8.3 A Signaling Transfer Point is a signaling network function that includes all of the capabilities provided by the signaling transfer point switches (STPs) and their associated signaling links that enables the exchange of SS7 messages among and between switching elements, database elements and signaling transfer point switches.

9.8.4 Technical Requirements

9.8.4.1 Signaling Transfer Point s shall provide access to BellSouth Local Switching or Tandem Switching and to BellSouth Service Control Points/Databases connected to BellSouth SS7 network. Signaling Transfer Point also provide access to third-party local or tandem switching and Third-party-provided Signaling Transfer Points.

9.8.4.2 The connectivity provided by Signaling Transfer Points shall fully support the functions of all other Network Elements connected to the BellSouth SS7 network. This includes the use of the BellSouth SS7 network to convey messages that neither originate nor terminate at a signaling end point directly connected to the BellSouth SS7 network (i.e., transit messages). When the BellSouth SS7 network is used to convey transit messages, there shall be no alteration of the Integrated Services Digital Network User Part or Transaction Capabilities Application Part (TCAP) user data that constitutes the content of the message.

9.8.4.3 If a BellSouth tandem switch routes traffic, based on dialed or translated digits, on SS7 trunks between a Talk America local switch and third party local switch, the BellSouth SS7 network shall convey the TCAP messages that are necessary to provide Call Management features (Automatic Callback, Automatic Recall, and Screening List Editing) between Talk America local STPs and the STPs that provide connectivity with the third party local switch, even if the third party local switch is not directly connected to BellSouth STPs.

9.8.4.4 STPs shall provide all functions of the SCCP necessary for Class 0 (basic connectionless) service, as defined in Telcordia ANSI Interconnection Requirements. This includes Global Title Translation (GTT) and SCCP Management procedures, as specified in ANSI T1.112.4. Where the destination signaling point is a Talk America or third party local or tandem switching system directly connected to BellSouth SS7 network, BellSouth shall perform final GTT of messages to the destination and SCCP Subsystem Management of the destination. In all other cases, BellSouth shall perform intermediate GTT of messages to a gateway pair of STPs in an SS7 network connected with BellSouth SS7 network, and shall not perform SCCP Subsystem Management of the destination. If BellSouth performs final GTT to a Talk America database, then Talk America agrees to provide BellSouth with the Destination Point Code for Talk America database.

9.8.4.5 STPs shall provide all functions of the OMAP as specified in applicable industry standard technical references, which may include, where available in BellSouth's network, MTP Routing Verification Test (MRVT); and SCCP Routing Verification Test (SRVT).

9.8.4.6 Where the destination signaling point is a BellSouth local or tandem switching system or database, or is a Talk America or third party local or tandem switching system directly connected to the BellSouth SS7 network, STPs shall perform MRVT and SRVT to the destination signaling point. In all other cases, STPs shall perform MRVT and SRVT to a gateway pair of STPs in an SS7 network connected with the BellSouth SS7 network. This requirement may be superseded by the specifications for Internetwork MRVT and SRVT when these become approved ANSI standards and available capabilities of BellSouth STPs.

9.9 **SS7 Advanced Intelligent Network (AIN) Access**

9.9.3 When technically feasible and upon request by Talk America, SS7 AIN Access shall be made available in association with switching. SS7 AIN Access is the provisioning of AIN 0.1 triggers in an equipped BellSouth local switch and interconnection of the BellSouth SS7 network with Talk America's SS7 network to exchange TCAP queries and responses with a Talk America SCP.

9.9.4 SS7 AIN Access shall provide Talk America SCP access to an equipped BellSouth local switch via interconnection of BellSouth's SS7 and Talk America SS7

Networks. BellSouth shall offer SS7 AIN Access through its STPs. If BellSouth requires a mediation device on any part of its network specific to this form of access, BellSouth must route its messages in the same manner. The interconnection arrangement shall result in the BellSouth local switch recognizing the Talk America SCP as at least at parity with BellSouth's SCPs in terms of interfaces, performance and capabilities.

9.9.5 Interface Requirements

9.9.5.1 BellSouth shall provide the following STP options to connect Talk America or Talk America-designated local switching systems to the BellSouth SS7 network:

9.9.5.1.1 An A-link interface from Talk America local switching systems; and,

9.9.5.1.2 A B-link interface from Talk America local STPs.

9.9.5.2 Each type of interface shall be provided by one or more layers of signaling links.

9.9.5.3 The Signaling Point of Interconnection for each link shall be located at a cross-connect element in the Central Office (CO) where the BellSouth STP is located. There shall be a DS1 or higher rate transport interface at each of the SPOIs. Each signaling link shall appear as a DS0 channel within the DS1 or higher rate interface.

9.9.5.4 BellSouth shall provide intraoffice diversity between the Signaling Point of Interconnection and BellSouth STPs, so that no single failure of intraoffice facilities or equipment shall cause the failure of both B-links in a layer connecting to a BellSouth STP.

9.9.5.5 STPs shall provide all functions of the MTP as defined in the applicable industry standard technical references.

9.9.6 Message Screening

9.9.6.1 BellSouth shall set message screening parameters so as to accept valid messages from Talk America local or tandem switching systems destined to any signaling point within BellSouth's SS7 network where the Talk America switching system has a valid signaling relationship.

9.9.6.2 BellSouth shall set message screening parameters so as to pass valid messages from Talk America local or tandem switching systems destined to any signaling point or network accessed through BellSouth's SS7 network where the Talk America switching system has a valid signaling relationship.

9.9.6.3 BellSouth shall set message screening parameters so as to accept and pass/send valid messages destined to and from Talk America from any signaling point or

network interconnected through BellSouth's SS7 network where the Talk America SCP has a valid signaling relationship.

9.10 **Service Control Points/Databases**

9.10.3 Call Related Databases provide the storage of, access to, and manipulation of information required to offer a particular service and/or capability. BellSouth shall provide access to the following Databases: Local Number Portability, LIDB, Toll Free Number Database, Automatic Location Identification/Data Management System, and Calling Name Database. BellSouth also provides access to Service Creation Environment and Service Management System (SCE/SMS) application databases and Directory Assistance.

9.10.4 A Service Control Point (SCP) is deployed in a SS7 network that executes service application logic in response to SS7 queries sent to it by a switching system also connected to the SS7 network. Service Management Systems provide operational interfaces to allow for provisioning, administration and maintenance of subscriber data and service application data stored in SCPs.

9.10.5 Technical Requirements for SCPs/Databases

9.10.5.1 BellSouth shall provide physical access to SCPs through the SS7 network and protocols with TCAP as the application layer protocol.

9.10.5.2 BellSouth shall provide physical interconnection to databases via industry standard interfaces and protocols (e.g. SS7, ISDN and X.25).

9.10.5.3 The reliability of interconnection options shall be consistent with requirements for diversity and survivability.

9.11 **Local Number Portability Database**

9.11.3 The Permanent Number Portability (PNP) database supplies routing numbers for calls involving numbers that have been ported from one local service provider to another. BellSouth agrees to provide access to the PNP database at rates, terms and conditions as set forth in Exhibit B of this Attachment in accordance with an effective FCC or Commission directive.

9.12 **SS7 Network Interconnection**

9.12.3 SS7 Network Interconnection is the interconnection of Talk America local signaling transfer point switches or Talk America local or tandem switching systems with BellSouth signaling transfer point switches. This interconnection provides connectivity that enables the exchange of SS7 messages among BellSouth switching systems and databases, Talk America local or tandem switching systems, and other third-party switching systems directly connected to the BellSouth SS7 network.

9.12.4 The connectivity provided by SS7 Network Interconnection shall fully support the functions of BellSouth switching systems and databases and Talk America or other third-party switching systems with A-link access to the BellSouth SS7 network.

9.12.5 If traffic is routed based on dialed or translated digits between a Talk America local switching system and a BellSouth or other third-party local switching system, either directly or via a BellSouth tandem switching system, then it is a requirement that the BellSouth SS7 network convey via SS7 Network Interconnection the TCAP messages that are necessary to provide Call Management services (Automatic Callback, Automatic Recall, and Screening List Editing) between the Talk America local signaling transfer point switches and BellSouth or other third-party local switch.

9.12.6 SS7 Network Interconnection shall provide:

9.12.6.1 Signaling Data Link functions, as specified in ANSI T1.111.2;

9.12.6.2 Signaling Link functions, as specified in ANSI T1.111.3; and

9.12.6.3 Signaling Network Management functions, as specified in ANSI T1.111.4.

9.12.7 SS7 Network Interconnection shall provide all functions of the SCCP necessary for Class 0 (basic connectionless) service, as specified in ANSI T1.112. This includes Global Title Translation (GTT) and SCCP Management procedures, as specified in ANSI T1.112.4. Where the destination signaling point is a BellSouth switching system or DB, or is another third-party local or tandem switching system directly connected to the BellSouth SS7 network, SS7 Network Interconnection shall include final GTT of messages to the destination and SCCP Subsystem Management of the destination. Where the destination signaling point is a Talk America local or tandem switching system, SS7 Network Interconnection shall include intermediate GTT of messages to a gateway pair of Talk America local STPs, and shall not include SCCP Subsystem Management of the destination.

9.12.8 SS7 Network Interconnection shall provide all functions of the Integrated Services Digital Network User Part, as specified in ANSI T1.113.

9.12.9 SS7 Network Interconnection shall provide all functions of the TCAP, as specified in ANSI T1.114.

9.12.10 If Internetwork MRVT and SRVT become approved ANSI standards and available capabilities of BellSouth STPs, SS7 Network Interconnection may provide these functions of the OMAP.

9.12.11 Interface Requirements

9.12.11.1 The following SS7 Network Interconnection interface options are available to connect Talk America or Talk America-designated local or tandem switching systems or signaling transfer point switches to the BellSouth SS7 network:

9.12.11.1.1 A-link interface from Talk America local or tandem switching systems; and

9.12.11.1.2 B-link interface from Talk America STPs.

9.12.11.2 The Signaling Point of Interconnection for each link shall be located at a cross-connect element in the central office where the BellSouth STP is located. There shall be a DS1 or higher rate transport interface at each of the Signaling Points of interconnection. Each signaling link shall appear as a DS0 channel within the DS1 or higher rate interface.

9.12.11.3 BellSouth shall provide intraoffice diversity between the Signaling Points of Interconnection and the BellSouth STP, so that no single failure of intraoffice facilities or equipment shall cause the failure of both B-links in a layer connecting to a BellSouth STP.

9.12.11.4 The protocol interface requirements for SS7 Network Interconnection include the MTP, ISDNUP, SCCP, and TCAP. These protocol interfaces shall conform to the applicable industry standard technical references.

9.12.11.5 BellSouth shall set message screening parameters to accept messages from Talk America local or tandem switching systems destined to any signaling point in the BellSouth SS7 network with which the Talk America switching system has a valid signaling relationship.

10 Operator Service and Directory Assistance

10.6 Operator Service provides: (1) operator handling for call completion (for example, collect, third number billing, and manual calling-card calls), (2) operator or automated assistance for billing after the end user has dialed the called number (for example, calling card calls); and (3) special services including but not limited to Busy Line Verification and Emergency Line Interrupt (ELI), Emergency Agency Call, and Operator-assisted Directory Assistance.

10.7 Upon request for BellSouth Operator Services, BellSouth shall:

10.7.3 Process 0+ and 0- dialed local calls.

10.7.4 Process 0+ and 0- intraLATA toll calls.

10.7.5 Process calls that are billed to Talk America end user's calling card that can be validated by BellSouth.

10.7.6 Process person-to-person calls.

10.7.7 Process collect calls.

10.7.8 Provide the capability for callers to bill to a third party and shall also process such calls.

10.7.9 Process station-to-station calls.

10.7.10 Process Busy Line Verify and Emergency Line Interrupt requests.

10.7.11 Process emergency call trace originated by Public Safety Answering Points.

10.7.12 Process operator-assisted directory assistance calls.

10.7.13 Adhere to equal access requirements**,** providing Talk America local end users the same IXC access as provided to BellSouth end users.

10.7.14 Exercise at least the same level of fraud control in providing Operator Service to Talk America that BellSouth provides for its own operator service.

10.7.15 Perform Billed Number Screening when handling Collect, Person-to-Person, and Billed-to-Third-Party calls.

10.7.16 Direct customer account and other similar inquiries to the customer service center designated by Talk America.

10.7.17 Provide call records to Talk America in accordance with ODUF standards specified in Attachment 7.

10.7.18 The interface requirements shall conform to the interface specifications for the platform used to provide Operator Services as long as the interface conforms to industry standards.

10.8 **Directory Assistance Service**

10.8.3 Directory Assistance Service provides local end user telephone number listings with the option to complete the call at the caller's direction separate and distinct from local switching.

10.8.4 Directory Assistance Service shall provide up to two listing requests per call. If available and if requested by Talk America's end user, BellSouth shall provide caller-optional directory assistance call completion service at rates contained in this Attachment to one of the provided listings.

10.8.5 Directory Assistance Service Updates

10.8.5.1 BellSouth shall update end user listings changes daily. These changes include:

10.8.5.1.1 New end user connections

10.8.5.1.2 End user disconnections

10.8.5.1.3 End user address changes

10.8.5.2 These updates shall also be provided for non-listed and non-published numbers for use in emergencies.

10.9 **Branding for Operator Call Processing and Directory Assistance**

10.9.3 BellSouth's branding feature provides a definable announcement to Talk America end users using Directory Assistance (DA)/Operator Call Processing (OCP) prior to placing such end users in queue or connecting them to an available operator or automated operator system. This feature allows Talk America to have its calls custom branded with Talk America's name on whose behalf BellSouth is providing Directory Assistance and/or Operator Call Processing. Rates for the branding features are set forth in this Attachment.

10.9.4 BellSouth offers three (3) service levels of branding to Talk America when ordering BellSouth's Directory Assistance and Operator Call Processing.

10.9.4.1 Service Level 1 - BellSouth Branding

10.9.4.2 Service Level 2 - Unbranding

10.9.4.3 Service Level 3 - Custom Branding

10.9.5 Where Talk America resells BellSouth's services or purchases unbundled local switching from BellSouth, and utilizes a directory assistance provider and operator services provider other than BellSouth, BellSouth will route Talk America's end user calls to that provider through Selective Carrier Routing.

10.9.6 **For Resellers and Use with an Unbundled Port**

10.9.6.1 Selective Call Routing using Line Class Codes (SCR-LCC) provides the capability for Talk America to have its OS/DA calls routed to BellSouth's OS/DA platform for BellSouth provided Custom Branded or Unbranded OS/DA or to its own or an alternate OS/DA platform for Self-Branded OS/DA. SCR-LCC is only available if line class code capacity is available in the requested BellSouth end office switches.

10.9.6.2 Custom Branding for Directory Assistance is not available for certain classes of service, including but not limited to Hotel/Motel services, WATS service, and certain PBX services.

10.9.6.3 Where available, Talk America specific and unique line class codes are programmed in each BellSouth end office switch where Talk America intends to serve end users with customized OS/DA branding. The line class codes specifically identify Talk America's end users so OS/DA calls can be routed over the

appropriate trunk group to the requested OS/DA platform. Additional line class codes are required in each end office if the end office serves multiple NPAs (i.e., a unique LCC is required per NPA), and/or if the end office switch serves multiple rate areas and Talk America intends to provide Talk America -branded OS/DA to its end users in these multiple rate areas.

10.9.6.4 BellSouth Branding is the Default Service Level.

10.9.6.5 SCR-LCC supporting Custom Branding and Self Branding require Talk America to order dedicated trunking from each BellSouth end office identified by Talk America, either to the BellSouth Traffic Operator Position System (TOPS) for Custom Branding or to the Talk America Operator Service Provider for Self Branding. Separate trunk groups are required for Operator Services and for Directory Assistance. Rates for trunks are set forth in Section 6.8.1 of the BellSouth tariffs.

10.9.6.6 Unbranding - Unbranded Directory Assistance and/or Operator Call Processing calls ride common trunk groups provisioned by BellSouth from those end offices identified by Talk America to the BellSouth TOPS. These calls are routed to "No Announcement."

10.9.6.7 The Rates for SCR-LCC are as set forth in this Attachment. There is a nonrecurring charge for the establishment of each Line Class Code in each BellSouth central office. Furthermore, for Unbranded and Custom Branded OS/DA provided by BellSouth Operator Services with unbundled ports and unbundled port/loop switch combinations, monthly recurring usage charges shall apply for the UNEs necessary to provide the service, such as end office and tandem switching and common transport. A flat rated end office switching charge shall apply to Self-Branded OS/DA when used in conjunction with unbundled ports and unbundled port/loop switch combinations.

10.9.6.8 In addition to the branding methods described in this Section, Unbranding and Custom Branding are also available for Directory Assistance, Operator Call Processing or both via Originating Line Number Screening (OLNS) software. When utilizing this method of Unbranding or Custom Branding, Talk America shall not be required to purchase dedicated trunking.

10.9.6.9 For BellSouth to provide Unbranding or Custom Branding via OLNS software for Operator Call Processing or for Directory Assistance, Talk America must have its Operating Company Number ("OCN(s)") and telephone numbers reside in BellSouth's LIDB; however, a BellSouth LIDB Storage Agreement is not required. To implement Unbranding and Custom Branding via OLNS software, Talk America must submit a manual order form which requires, among other things, Talk America's OCN and a forecast for the traffic volume anticipated for each BellSouth TOPS during the peak busy hour. Talk America shall provide updates to such forecast on a quarterly basis and at any time such forecasted traffic

volumes are expected to change significantly. Upon Talk America's purchase of Unbranding or Custom Branding using OLNS software for any particular TOPS, all Talk America end users served by that TOPS will receive the Unbranded "no announcement" or the Custom Branded announcement.

10.9.6.10 Rates for Unbranding and Custom Branding via OLNS software for Directory Assistance and for Operator Call Processing are as set forth in this Attachment. In addition to the charges for Unbranding and Custom Branding via OLNS software, Talk America shall continue to pay BellSouth applicable labor and other charges for the use of BellSouth's Directory Assistance and Operator Call Processing platforms as set forth in this Attachment. Further, where Talk America is purchasing unbundled local switching from BellSouth, UNE usage charges for end office switching, tandem switching and transport, as applicable, shall continue to apply.

10.9.7 **For Facilities Based Carriers**

10.9.7.1 All Service Levels require Talk America to order dedicated trunking from their end office(s) point of interface to the BellSouth TOPS Switches. Rates for trunks are set forth in applicable BellSouth tariffs.

10.9.7.2 Customized Branding includes charges for the recording of the branding announcement and the loading of the audio units in each TOPS Switch and Network Applications Vehicle (NAV) equipment for which Talk America requires service.

10.9.7.3 Directory Assistance customized branding uses:

10.9.7.3.1 the recording of Talk America;

10.9.7.3.2 the front-end loading of the Digital Recorded Announcement Machine (DRAM) in each TOPS switch.

10.9.7.4 Operator Call Processing customized branding uses:

10.9.7.4.1 the recording of Talk America;

10.9.7.4.2 the front-end loading of the DRAM in the TOPS Switch;

10.9.7.4.3 the 0- automation loading for the audio units in the Enhanced Billing and Access Service (EBAS) in the Network Applications Vehicle (NAV).

10.10 **Directory Assistance Database Service (DADS)**

10.10.3 BellSouth shall make its Directory Assistance Database Service (DADS) available at the rates set forth in this Attachment solely for the expressed purpose of providing Directory Assistance type services to Talk America end users. The term

"end user" denotes any entity that obtains Directory Assistance type services for its own use from a DADS customer. Directory Assistance type service is defined as Voice Directory Assistance (DA Operator assisted) and Electronic Directory Assistance (Data System assisted). Talk America agrees that DADS will not be used for any purpose that violates federal or state laws, statutes, regulatory orders or tariffs. For the purposes of provisioning a Directory Assistance type service, all terms and conditions of GSST A38 apply and are incorporated by reference herein. Except for the permitted uses, Talk America agrees not to disclose DADS to others and shall provide due care in providing for the security and confidentiality of DADS.

10.10.4 BellSouth shall initially provide Talk America with a Base File of subscriber listings which reflect all listing change activity occurring since Talk America's most recent update via magnetic tape. DADS is available and may be ordered on a Business, Residence or combined Business and Residence listings basis for each central office requested. BellSouth will require approximately 30- 45 days after receiving an order from Talk America to prepare the Base File.

10.10.5 BellSouth will provide updates at least weekly reflecting all listing change activity occurring since Talk America's previous update. Delivery of updates will commence immediately after Talk America receives the Base File. Updates will be provided via magnetic tape unless BellSouth and Talk America mutually develop CONNECT: Direct ™ electronic connectivity. Talk America will pay all costs associated with CONNECT: Direct ™ connectivity, which will vary depending upon volume and mileage.

10.10.6 Talk America authorizes the inclusion of Talk America Directory Assistance listings in the BellSouth Directory Assistance products, including but not limited to DADS. Any other use is not authorized.

10.11 **Direct Access to Directory Assistance Service**

10.11.3 Direct Access to Directory Assistance Service (DADAS) will provide Talk America's directory assistance operators with the ability to search all available BellSouth subscriber listings using the Directory Assistance search format. Subscription to DADAS will allow Talk America to utilize its own switch, operator workstations and optional audio subsystems.

10.11.4 Rates, terms and conditions for provisioning DADAS are as set forth in the FCC tariff No. 1.

11 Automatic Location Identification/Data Management System (ALI/DMS)

11.6 The ALI/DMS Database contains end user information (including name, address, telephone information, and sometimes special information from the local service provider or end user) used to determine to which Public Safety Answering Point

("PSAP") to route the call. The ALI/DMS database is used to provide enhanced routing flexibility for E911.

11.7 Technical Requirements

11.7.3 BellSouth shall provide Talk America a data link to the ALI/DMS database or permit Talk America to provide its own data link to the ALI/DMS database. BellSouth shall provide error reports from the ALI/DMS database to Talk America after Talk America inputs end user information into the ALI/DMS database. Alternately, Talk America may request that BellSouth enter Talk America's end user information into the database, and validate end user information.

11.7.4 When BellSouth is responsible for administering the ALI/DMS database in its entirety, ported number NXXs entries for the ported numbers should be maintained unless Talk America requests otherwise and shall be updated if Talk America requests, provided Talk America supplies BellSouth with the updates.

11.7.5 When Remote Call Forwarding (RCF) is used to provide number portability to the local end user and a remark or other appropriate field information is available in the database, the shadow or "forwarded-to" number and an indication that the number is ported shall be added to the customer record.

11.7.6 If BellSouth is responsible for configuring PSAP features (for cases when the PSAP or BellSouth supports an ISDN interface) it shall ensure that CLASS Automatic Recall (Call Return) is not used to call back to the ported number. Although BellSouth currently does not have ISDN interface, BellSouth agrees to comply with this requirement once ISDN interfaces are in place.

11.8 Interface Requirements

11.8.3 The interface between the E911 Switch or Tandem and the ALI/DMS database for Talk America end users shall meet industry standards.

12 Calling Name (CNAM) Database Service

12.6 CNAM is the ability to associate a name with the calling party number, allowing the end user (to which a call is being terminated) to view the calling party's name before the call is answered. This service also provides Talk America the opportunity to load and store its subscriber names in the BellSouth CNAM SCPs.

12.7 Talk America shall submit to BellSouth a notice of its intent to access and utilize BellSouth CNAM Database Services. Said notice shall be in writing, no less than 60 days prior to Talk America's access to BellSouth's CNAM Database Services and shall be addressed to Talk America's Account Manager.

12.8 BellSouth's provision of CNAM Database Services to Talk America requires interconnection from Talk America to BellSouth CNAM Service Control Points

(SCPs). Such interconnections shall be established pursuant to Attachment 3 of this Agreement, incorporated herein by this reference.

12.9 In order to formulate a CNAM query to be sent to the BellSouth CNAM SCP, Talk America shall provide its own CNAM SSP. Talk America's CNAM SSPs must be compliant with TR-NWT-001188, "CLASS Calling Name Delivery Generic Requirements".

12.10 If Talk America elects to access the BellSouth CNAM SCP via a third party CCS7 transport provider, the third party CCS7 provider shall interconnect with the BellSouth CCS7 network according to BellSouth's Common Channel Signaling Interconnection Guidelines and Telcordia's CCS Network Interface Specification document, TR-TSV-000905. In addition, the third party provider shall establish CCS7 interconnection at the BellSouth Local Signal Transfer Points (LSTPs) serving the BellSouth CNAM SCPs that Talk America desires to query.

12.11 If Talk America queries the BellSouth CNAM SCP via a third party national SS7 transport provider, the third party SS7 provider shall interconnect with the BellSouth CCS7 network according to BellSouth's Common Channel Signaling Interconnection Guidelines and Telcordia's CCS Network Interface Specification document, TR-TSV-000905. In addition, the third party provider shall establish SS7 interconnection at one or more of the BellSouth Gateway Signal Transfer Points (STPs). The payment of all costs associated with the transport of SS7 signals via a third party will be established by mutual agreement of the Parties and this Agreement shall be amended in accordance with modification of the General Terms and Conditions incorporated herein by this reference.

12.12 The mechanism to be used by Talk America for initial CNAM record load and/or updates shall be determined by mutual agreement. The initial load and all updates shall be provided by Talk America in the BellSouth specified format and shall contain records for every working telephone number that can originate phone calls. It is the responsibility of Talk America to provide accurate information to BellSouth on a current basis.

12.13 Updates to the SMS shall occur no less than once a week, reflect service order activity affecting either name or telephone number, and involve only record additions, deletions or changes.

12.14 Talk America CNAM records provided for storage in the BellSouth CNAM SCP shall be available, on a SCP query basis only, to all Parties querying the BellSouth CNAM SCP. Further, CNAM service shall be provided by each Party consistent with state and/or federal regulation.

13 Service Creation Environment and Service Management System (SCE/SMS) Advanced Intelligent Network (AIN) Access

13.6 BellSouth's Service Creation Environment and Service Management System (SCE/SMS) Advanced Intelligent Network (AIN) Access shall provide Talk America the capability to create service applications in a BellSouth SCE and deploy those applications in a BellSouth SMS to a BellSouth SCP.

13.7 BellSouth's SCE/SMS AIN Access shall provide access to SCE hardware, software, testing and technical support (e.g., help desk, system administrator) resources available to Talk America. Training, documentation, and technical support will address use of SCE and SMS access and administrative functions, but will not include support for the creation of a specific service application.

13.8 BellSouth SCP shall partition and protect Talk America service logic and data from unauthorized access.

13.9 When Talk America selects SCE/SMS AIN Access, BellSouth shall provide training, documentation, and technical support to enable Talk America to use BellSouth's SCE/SMS AIN Access to create and administer applications.

13.9.3 Talk America access will be provided via remote data connection (e.g., dial-in, ISDN).

13.9.4 BellSouth shall allow Talk America to download data forms and/or tables to BellSouth SCP via BellSouth SMS without intervention from BellSouth.

14 Basic 911 and E911

14.6 Basic 911 and E911 provides a caller access to the applicable emergency service bureau by dialing 911.

14.7 Basic 911 Service Provisioning. BellSouth will provide to Talk America a list consisting of each municipality that subscribes to Basic 911 service. The list will also provide, if known, the E911 conversion date for each municipality and, for network routing purposes, a ten-digit directory number representing the appropriate emergency answering position for each municipality subscribing to 911. Talk America will be required to arrange to accept 911 calls from its end users in municipalities that subscribe to Basic 911 service and translate the 911 call to the appropriate 10-digit directory number as stated on the list provided by BellSouth. Talk America will be required to route that call to BellSouth at the appropriate tandem or end office. When a municipality converts to E911 service, Talk America will be required to begin using E911 procedures.

14.8 E911 Service Provisioning. Talk America shall install a minimum of two dedicated trunks originating from the Talk America serving wire center and terminating to the appropriate E911 tandem. The dedicated trunks shall be, at a minimum, DS-0 level trunks configured either as a 2-wire analog interface or as part of a digital (1.544 Mb/s) interface. Either configuration shall use CAMA-type signaling with multifrequency ("MF") pulsing that will deliver automatic number identification

("ANI") with the voice portion of the call. If the user interface is digital, MF pulses, as well as other AC signals, shall be encoded per the u-255 Law convention. Talk America will be required to provide BellSouth daily updates to the E911 database. Talk America will be required to forward 911 calls to the appropriate E911 tandem, along with ANI, based upon the current E911 end office to tandem homing arrangement as provided by BellSouth. If the E911 tandem trunks are not available, Talk America will be required to route the call to a designated 7-digit local number residing in the appropriate Public Service Answering Point ("PSAP"). This call will be transported over BellSouth's interoffice network and will not carry the ANI of the calling party. Talk America shall be responsible for providing BellSouth with complete and accurate data for submission to the 911/E911 database for the purpose of providing 911/E911 to its end users.

14.9 Rates. Charges for 911/E911 service are borne by the municipality purchasing the service. BellSouth will impose no charge on Talk America beyond applicable charges for BellSouth trunking arrangements.

14.10 Basic 911 and E911 functions provided to Talk America shall be at least at parity with the support and services that BellSouth provides to its end users for such similar functionality.

14.11 Detailed Practices and Procedures. The detailed practices and procedures contained in the E911 Local Exchange Carrier Guide For Facility-Based Providers as amended from time to time during the term of this Agreement will determine the appropriate practices and procedures for BellSouth and Talk America to follow in providing 911/E911 services.

15 Operational Support Systems (OSS)

15.6 BellSouth has developed and made available the following electronic interfaces by which Talk America may submit LSRs electronically.

LENS	Local Exchange Navigation System
EDI	Electronic Data Interchange
TAG	Telecommunications Access Gateway

15.7 LSRs submitted by means of one of these electronic interfaces will incur an OSS electronic ordering charge. An individual LSR will be identified for billing purposes by its Purchase Order Number (PON). LSRs submitted by means other than one of these interactive interfaces (mail, fax, courier, etc.) will incur a manual order charge. All OSS charges are specified in Rate Exhibit B of this Attachment 2.

15.8 Denial/Restoral OSS Charge

15.8.3 In the event Talk America provides a list of customers to be denied and restored, rather than an LSR, each location on the list will require a separate PON and, therefore will be billed as one LSR per location.

15.9 Cancellation OSS Charge

15.9.3 Talk America will incur an OSS charge for an accepted LSR that is later canceled.

15.9.4 Supplements or clarifications to a previously billed LSR will not incur another OSS charge.

15.9.5 Network Elements and Other Services Manual Additive

15.9.5.1 The Commissions in some states have ordered per-element manual additive non-recurring charges (NRC) for Network Elements and Other Services ordered by means other than one of the interactive interfaces. These ordered Network Elements and Other Services manual additive NRCs will apply in these states, rather than the charge per LSR. The per-element charges are listed on the Rate Tables in Exhibit B.

EXHIBIT A

LINE INFORMATION DATA BASE (LIDB)

FACILITIES BASED STORAGE AGREEMENT

I. Definitions

A. Billing number - a number that Talk America creates for the purpose of identifying an account liable for charges. This number may be a line or a special billing number.

B. Line number - a ten digit number that identifies a telephone line administered by Talk America.

C. Special billing number - a ten-digit number that identifies a billing account established by Talk America.

D. Calling Card number - a billing number plus PIN number.

E. PIN number - a four-digit security code assigned by Talk America that is added to a billing number to compose a fourteen-digit calling card number.

F. Toll billing exception indicator - associated with a billing number to indicate that it is considered invalid for billing of collect calls or third number calls or both, by Talk America.

G. Billed Number Screening - refers to the activity of determining whether a toll billing exception indicator is present for a particular billing number.

H. Calling Card Validation - refers to the activity of determining whether a particular calling card number exists as stated or otherwise provided by a caller.

I. Billing number information - information about billing number, Calling Card number and toll billing exception indicator provided to BellSouth by Talk America.

II. General

A. This Agreement sets forth the terms and conditions pursuant to which BellSouth agrees to store in its LIDB certain information at the request of Talk America and pursuant to which BellSouth, its LIDB customers and Talk America shall have access to such information. In addition, this Agreement sets forth the terms and conditions for Talk America's provision of billing number information to BellSouth for inclusion in BellSouth's LIDB. Talk America understands that BellSouth provides access to information in its LIDB to various telecommunications service providers pursuant to applicable tariffs and agrees that information stored at the request of Talk America, pursuant to this Agreement, shall be available to those telecommunications service providers. The terms and conditions contained herein shall hereby be made a part of this Interconnection Agreement upon notice to Talk America's account team to

activate this LIDB Storage Agreement. The General Terms and Conditions of the Interconnection/Resale Agreement shall govern this LIDB Storage Agreement.

B. BellSouth will provide responses to on-line, call-by-call queries to billing number information for the following purposes:

1. Billed Number Screening

   BellSouth is authorized to use the billing number information to determine whether Talk America has identified the billing number as one that should not be billed for collect or third number calls.

2. Calling Card Validation

   BellSouth is authorized to validate a 14-digit Calling Card number where the first 10 digits are a line number or special billing number assigned by BellSouth and where the last four digits (PIN) are a security code assigned by BellSouth.

3. Fraud Control

   BellSouth will provide seven days per week, 24-hours per day, fraud monitoring on Calling Cards, bill-to-third and collect calls made to numbers in BellSouth's LIDB, provided that such information is included in the LIDB query. BellSouth will establish fraud alert thresholds and will notify Talk America of fraud alerts so that Talk America may take action it deems appropriate.

III. Responsibilities of the Parties

A. BellSouth will administer all data stored in the LIDB, including the data provided by Talk America pursuant to this Agreement, in the same manner as BellSouth's data for BellSouth's end user customers. BellSouth shall not be responsible to Talk America for any lost revenue which may result from BellSouth's administration of the LIDB pursuant to its established practices and procedures as they exist and as they may be changed by BellSouth in its sole discretion from time to time.

B. Billing and Collection Customers

BellSouth currently has in effect numerous billing and collection agreements with various interexchange carriers and billing clearinghouses and as such these billing and collection customers ("B&C Customers") query BellSouth's LIDB to determine whether to accept various billing options from end users. Until such time as BellSouth implements in its LIDB and its supporting systems the means to differentiate Talk America's data from BellSouth's data, the following terms and conditions shall apply:

1. Talk America will accept responsibility for telecommunications services billed by BellSouth for its B&C Customers for Talk America's End User accounts which

are resident in LIDB pursuant to this Agreement. Talk America authorizes BellSouth to place such charges on Talk America's bill from BellSouth and shall pay all such charges including, but not limited to, collect and third number calls.

2. Charges for such services shall appear on a separate BellSouth bill page identified with the name of the B&C Customers for which BellSouth is billing the charge.

3. Talk America shall have the responsibility to render a billing statement to its End Users for these charges, but Talk America shall pay BellSouth for the charges billed regardless of whether Talk America collects from Talk America's End Users.

4. BellSouth shall have no obligation to become involved in any disputes between Talk America and B&C Customers. BellSouth will not issue adjustments for charges billed on behalf of any B&C Customer to Talk America. It shall be the responsibility of Talk America and the B&C Customers to negotiate and arrange for any appropriate adjustments.

C. SPNP Arrangements

1. BellSouth will include billing number information associated with exchange lines or SPNP arrangements in its LIDB. Talk America will request any toll billing exceptions via the Local Service Request (LSR) form used to order exchange lines, or the SPNP service request form used to order SPNP arrangements.

2. Under normal operating conditions, BellSouth shall include the billing number information in its LIDB upon completion of the service order establishing either the local exchange service or the SPNP arrangement, provided that BellSouth shall not be held responsible for any delay or failure in performance to the extent such delay or failure is caused by circumstances or conditions beyond BellSouth's reasonable control. BellSouth will store in its LIDB an unlimited volume of the working telephone numbers associated with either the local exchange lines or the SPNP arrangements. For local exchange lines or for SPNP arrangements, BellSouth will issue line-based calling cards only in the name of Talk America. BellSouth will not issue line-based calling cards in the name of Talk America's individual End Users. In the event that Talk America wants to include calling card numbers assigned by Talk America in the BellSouth LIDB, a separate agreement is required.

V. Fees for Service and Taxes

A. Talk America will not be charged a fee for storage services provided by BellSouth to Talk America, as described in this LIDB Facilities Based Storage Agreement.

B. Sales, use and all other taxes (excluding taxes on BellSouth's income) determined by BellSouth or any taxing authority to be due to any federal, state or local taxing jurisdiction with respect to the provision of the service set forth herein will be paid by

Talk America in accordance with the tax provisions set forth in the General Terms and Conditions of this Agreement.

UNBUNDLED NETWORK ELEMENTS - Alabama

Attachment: 2 | Exhibit: B

CATEGORY	RATE ELEMENTS	Interim	Zone	BCS	USOC	RATES($) Rec	Nonrecurring First	Nonrecurring Add'l	Nonrecurring Disconnect First	Nonrecurring Disconnect Add'l	Svc Order Submitted Elec per LSR	Svc Order Submitted Manually per LSR	Incremental Charge - Manual Svc Order vs. Electronic- 1st	Incremental Charge - Manual Svc Order vs. Electronic- Add'l	Incremental Charge - Manual Svc Order vs. Electronic- Disc 1st	Incremental Charge - Manual Svc Order vs. Electronic- Disc Add'l
											OSS Rates($)					
											SOMEC	SOMAN	SOMAN	SOMAN	SOMAN	SOMAN
OPERATIONAL SUPPORT SYSTEMS																
	NOTE: (1) Electronic Service Order: CLEC should contact its contract negotiator if it prefers the state specific electronic service ordering charges as ordered by the State Commissions. The electronic service ordering charge currently contained in this rate exhibit is the BellSouth regional electronic service ordering charge. CLEC may elect either the state specific Commission ordered rates for the electronic service ordering charges, or CLEC may elect the regional electronic service ordering charge.															
	NOTE: (2) Any element that can be ordered electronically will be billed according to the SOMEC rate listed in this category. Please refer to BellSouth's Business Rules for Local Ordering (BBR-LO) to determine if a product can be ordered electronically. For those elements that cannot be ordered electronically at present per the BBR-LO, the listed SOMEC rate in this category reflects the charge that would be billed to a CLEC once electronic ordering capabilities come on-line for that element. Otherwise, the manual ordering charge, SOMAN, will be applied to a CLECs bill when it submits an LSR to BellSouth.															
	Electronic OSS Charge, per LSR, submitted via BST's OSS interactive interfaces (Regional)				SOMEC		3.50									
UNBUNDLED EXCHANGE ACCESS LOOP																
	2-WIRE ANALOG VOICE GRADE LOOP															
	2-Wire Analog Voice Grade Loop - Service Level 1- Zone 1		1	UEANL	UEAL2	15.24	59.03	43.14	15.21	3.22			27.37	12.97	17.77	17.77
	2-Wire Analog Voice Grade Loop - Service Level 1- Zone 2		2	UEANL	UEAL2	24.75	59.03	43.14	15.21	3.22			27.37	12.97	17.77	17.77
	2-Wire Analog Voice Grade Loop - Service Level 1- Zone 3		3	UEANL	UEAL2	44.85	59.03	43.14	15.21	3.22			23.97	12.97	17.77	17.77
	Loop Testing - Basic 1st Half Hour			UEANL	URET1		78.92	78.92					27.37	12.97	17.77	17.77
	Loop Testing - Basic Additional Half Hour			UEANL	URETA		23.33	23.33					27.37	12.97	17.77	17.77
	CLEC to CLEC Conversion Charge Without Outside Dispatch (UVL-SL1)			UEANL	UREWO		15.78	8.94					27.37	12.97	17.77	17.77
	Engineering Information Document (EI)			UEANL			28.75	28.75								
	Manual Order Coordination for UVL-SL1s (per loop)			UEANL	UEAMC		51.29	51.29								
	Order Coordination for Specified Conversion Time for UVL-SL1 (per LSR)			UEANL	OCOSL		45.99	45.99								
	2-WIRE Unbundled COPPER LOOP															
	2-Wire Unbundled Copper Loop - Non-Designed Zone 1	I	1	UEQ	UEQ2X	11.01	44.69	22.40	25.65	7.06			27.37	12.97	17.77	17.77
	2 Wire Unbundled Copper Loop - Non-Designed - Zone 2	I	2	UEQ	UEQ2X	12.67	44.69	22.40	25.65	7.06			27.37	12.97	17.77	17.77
	2 Wire Unbundled Copper Loop - Non-Designed - Zone 3	I	3	UEQ	UEQ2X	20.22	44.69	22.40	25.65	7.06			27.37	12.97	17.77	17.77
	Order Coordination 2 Wire Unbundled Copper Loop - Non-Designed (per loop)			UEQ	USBMC		51.29	51.29					27.37	12.97	17.77	17.77
	Engineering Information Document			UEQ			28.75	28.75					27.37	12.97	17.77	17.77
	Loop Testing - Basic 1st Half Hour			UEQ	URET1		78.92	78.92					27.37	12.97	17.77	17.77
	Loop Testing - Basic Additional Half Hour			UEQ	URETA		23.33	23.33					27.37	12.97	17.77	17.77
	CLEC to CLEC Conversion Charge Without Outside Dispatch (UCL-ND)			UEQ	UREWO		14.27	7.43					18.84	8.42		
UNBUNDLED EXCHANGE ACCESS LOOP																
	2-WIRE ANALOG VOICE GRADE LOOP															
	2 Wire Analog Voice Grade Loop-Service Level 1-Line Splitting-Zone 1		1	UEPSR UEPSB	UEALS	18.24	75.62	35.11	46.98	10.59			27.37	12.97	17.77	17.77
	2 Wire Analog Voice Grade Loop-Service Level 1-Line Splitting-Zone 1		1	UEPSR UEPSB	UEABS	18.24	75.62	35.11	46.98	10.59			27.37	12.97	17.77	17.77
	2 Wire Analog Voice Grade Loop- Service Level 1-Line Splitting-Zone 2		2	UEPSR UEPSB	UEALS	25.22	75.62	35.11	46.98	10.59			27.37	12.97	17.77	17.77
	2 Wire Analog Voice Grade Loop- Service Level 1-Line Splitting-Zone 2		2	UEPSR UEPSB	UEABS	25.22	75.62	35.11	46.98	10.59			27.37	12.97	17.77	17.77
	2 Wire Analog Voice Grade Loop-Service Level 1-Line Splitting-Zone 3		3	UEPSR UEPSB	UEALS	33.70	75.62	35.11	46.98	10.59			23.97	12.97	17.77	17.77
	2 Wire Analog Voice Grade Loop-Service Level 1-Line Splitting-Zone 3		3	UEPSR UEPSB	UEABS	33.70	75.62	35.11	46.98	10.59			23.97	12.97	17.77	17.77
UNBUNDLED EXCHANGE ACCESS LOOP																
	2-WIRE ANALOG VOICE GRADE LOOP															
	2-Wire Analog Voice Grade Loop - Service Level 2 w/Loop or Ground Start Signaling - Zone 1		1	UEA	UEAL2	17.95	145.46	108.40	40.31	26.01			27.37	12.97	17.77	17.77
	2-Wire Analog Voice Grade Loop - Service Level 2 w/Loop or Ground Start Signaling - Zone 2		2	UEA	UEAL2	29.16	145.46	108.40	40.31	26.01			27.37	12.97	17.77	17.77
	2-Wire Analog Voice Grade Loop - Service Level 2 w/Loop or Ground Start Signaling - Zone 3		3	UEA	UEAL2	52.84	145.46	108.40	40.31	26.01			27.37	12.97	17.77	17.77
	Order Coordination for Specified Conversion Time (per LSR)			UEA	OCOSL		45.99									
	2-Wire Analog Voice Grade Loop - Service Level 2 w/Reverse Battery Signaling - Zone 1		1	UEA	UEAR2	17.95	145.46	108.40	40.31	26.01			27.37	12.97	17.77	17.77

CATEGORY	RATE ELEMENTS	Interim	Zone	BCS	USOC	RATES($) Rec	Nonrecurring First	Nonrecurring Add'l	Nonrecurring Disconnect First	Nonrecurring Disconnect Add'l	Svc Order Submitted Elec per LSR	Svc Order Submitted Manually per LSR	Incremental Charge - Manual Svc Order vs. Electronic-1st	Incremental Charge - Manual Svc Order vs. Electronic-Add'l	Incremental Charge - Manual Svc Order vs. Electronic-Disc 1st	Incremental Charge - Manual Svc Order vs. Electronic-Disc Add'l
											OSS Rates($)					
											SOMEC	SOMAN	SOMAN	SOMAN	SOMAN	SOMAN
	2-Wire Analog Voice Grade Loop - Service Level 2 w/Reverse Battery Signaling - Zone 2		2	UEA	UEAR2	29.16	145.46	108.40	40.31	26.01			27.37	12.97	17.77	17.77
	2-Wire Analog Voice Grade Loop - Service Level 2 w/Reverse Battery Signaling - Zone 3		3	UEA	UEAR2	52.84	145.46	108.40	40.31	26.01			27.37	12.97	17.77	17.77
	Order Coordination for Specified Conversion Time (per LSR)			UEA	OCOSL		45.99									
	CLEC to CLEC Conversion Charge without outside dispatch			UEA	UREWO		87.72	36.36					27.37	12.97	17.77	17.77
4-WIRE ANALOG VOICE GRADE LOOP																
	4-Wire Analog Voice Grade Loop - Zone 1		1	UEA	UEAL4	24.01	293.70	241.76	108.96	57.01			27.37	12.97	17.77	17.77
	4-Wire Analog Voice Grade Loop - Zone 2		2	UEA	UEAL4	39.00	293.70	241.76	108.96	57.01			27.37	12.97	17.77	17.77
	4-Wire Analog Voice Grade Loop - Zone 3		3	UEA	UEAL4	70.67	293.70	241.76	108.96	57.01			27.37	12.97	17.77	17.77
	Order Coordination for Specified Conversion Time (per LSR)			UEA	OCOSL		45.99									
	CLEC to CLEC Conversion Charge without outside dispatch			UEA	UREWO		87.72	36.36					27.37	12.97	17.77	17.77
2-WIRE ISDN DIGITAL GRADE LOOP																
	2-Wire ISDN Digital Grade Loop - Zone 1		1	UDN	U1L2X	23.23	331.85	255.87	108.95	57.01			27.37	12.97	17.77	17.77
	2-Wire ISDN Digital Grade Loop - Zone 2		2	UDN	U1L2X	37.74	331.85	255.87	108.95	57.01			27.37	12.97	17.77	17.77
	2-Wire ISDN Digital Grade Loop - Zone 3		3	UDN	U1L2X	68.38	331.85	255.87	108.95	57.01			27.37	12.97	17.77	17.77
	Order Coordination For Specified Conversion Time (per LSR)			UDN	OCOSL		45.99									
	CLEC to CLEC Conversion Charge without outside dispatch			UDN	UREWO		91.63	44.16					27.37	12.97	17.77	17.77
2-WIRE Universal Digital Channel (UDC) COMPATIBLE LOOP																
	2-Wire Universal Digital Channel (UDC) Compatible Loop - Zone 1	I	1	UDC	UDC2X	16.84	104.17	78.10	108.95	57.01			18.94	8.42	17.77	17.77
	2-Wire Universal Digital Channel (UDC) Compatible Loop - Zone 2	I	2	UDC	UDC2X	19.45	104.17	78.10	108.95	57.01			18.94	8.42	17.77	17.77
	2-Wire Universal Digital Channel (UDC) Compatible Loop - Zone 3	I	3	UDC	UDC2X	30.92	104.17	78.10	108.95	57.01			18.94	8.42	17.77	17.77
	CLEC to CLEC Conversion Charge without outside dispatch			UDC	UREWO		91.63	44.16					27.37	12.97	17.77	17.77
2-WIRE ASYMMETRICAL DIGITAL SUBSCRIBER LINE (ADSL) COMPATIBLE LOOP																
	2 Wire Unbundled ADSL Loop including manual service inquiry & facility reservation - Zone 1		1	UAL	UAL2X	12.09	514.21	464.58	106.65	56.98			27.37	12.97	17.77	17.77
	2 Wire Unbundled ADSL Loop including manual service inquiry & facility reservation - Zone 2		2	UAL	UAL2X	19.64	514.21	464.58	106.65	56.98			27.37	12.97	17.77	17.77
	2 Wire Unbundled ADSL Loop including manual service inquiry & facility reservation - Zone 3		3	UAL	UAL2X	35.59	514.21	464.58	106.65	56.98			27.37	12.97	17.77	17.77
	Order Coordination for Specified Conversion Time (per LSR)			UAL	OCOSL		45.99									
	2 Wire Unbundled ADSL Loop without manual service inquiry & facility reservaton - Zone 1		1	UAL	UAL2W	12.09	204.88	129.08	100.52	15.82			27.37	12.97	17.77	17.77
	2 Wire Unbundled ADSL Loop without manual service inquiry & facility reservaton - Zone 2		2	UAL	UAL2W	19.64	204.88	129.08	100.52	15.82			27.37	12.97	17.77	17.77
	2 Wire Unbundled ADSL Loop without manual service inquiry & facility reservaton - Zone 3		3	UAL	UAL2W	35.59	204.88	129.08	100.52	15.82			27.37	12.97	17.77	17.77
	Order Coordination for Specified Conversion Time (per LSR)			UAL	OCOSL		45.99									
	CLEC to CLEC Conversion Charge without outside dispatch			UAL	UREWO		86.20	40.40					27.37	12.97	17.77	17.77
2-WIRE HIGH BIT RATE DIGITAL SUBSCRIBER LINE (HDSL) COMPATIBLE LOOP																
	2 Wire Unbundled HDSL Loop including manual service inquiry & facility reservation - Zone 1		1	UHL	UHL2X	9.41	514.21	464.58	106.65	56.98			27.37	12.97	17.77	17.77
	2 Wire Unbundled HDSL Loop including manual service inquiry & facility reservation - Zone 2		2	UHL	UHL2X	15.29	514.21	464.58	106.65	56.98			27.37	12.97	17.77	17.77
	2 Wire Unbundled HDSL Loop including manual service inquiry & facility reservation - Zone 3		3	UHL	UHL2X	27.70	514.21	464.58	106.65	56.98			27.37	12.97	17.77	17.77
	Order Coordination for Specified Conversion Time (per LSR)			UHL	OCOSL		45.99									
	2 Wire Unbundled HDSL Loop without manual service inquiry and facility reservation - Zone 1		1	UHL	UHL2W	9.41	222.20	146.40	100.52	15.82			27.37	12.97	17.77	17.77
	2 Wire Unbundled HDSL Loop without manual service inquiry and facility reservation - Zone 2		2	UHL	UHL2W	15.29	222.20	146.40	100.52	15.82			27.37	12.97	17.77	17.77
	2 Wire Unbundled HDSL Loop without manual service inquiry and facility reservation - Zone 3		3	UHL	UHL2W	27.70	222.20	146.40	100.52	15.82			27.37	12.97	17.77	17.77
	Order Coordination for Specified Conversion Time (per LSR)			UHL	OCOSL		45.99									
	CLEC to CLEC Conversion Charge without outside dispatch			UHL	UREWO		86.14	40.40					27.37	12.97	17.77	17.77
4-WIRE HIGH BIT RATE DIGITAL SUBSCRIBER LINE (HDSL) COMPATIBLE LOOP																

CATEGORY	RATE ELEMENTS	Interim	Zone	BCS	USOC	RATES($)					Svc Order Submitted Elec per LSR	Svc Order Submitted Manually per LSR	Incremental Charge - Manual Svc Order vs. Electronic-1st	Incremental Charge - Manual Svc Order vs. Electronic-Add'l	Incremental Charge - Manual Svc Order vs. Electronic-Disc 1st	Incremental Charge - Manual Svc Order vs. Electronic-Disc Add'l
						Rec	Nonrecurring		Nonrecurring Disconnect		OSS Rates($)					
							First	Add'l	First	Add'l	SOMEC	SOMAN	SOMAN	SOMAN	SOMAN	SOMAN
	4 Wire Unbundled HDSL Loop including manual service inquiry and facility reservation - Zone 1		1	UHL	UHL4X	11.52	541.13	491.50	106.65	56.98			27.37	12.97	17.77	17.77
	4-Wire Unbundled HDSL Loop including manual service inquiry and facility reservation - Zone 2		2	UHL	UHL4X	18.71	541.13	491.50	106.65	56.98			27.37	12.97	17.77	17.77
	4-Wire Unbundled HDSL Loop including manual service inquiry and facility reservation - Zone 3		3	UHL	UHL4X	33.90	541.13	491.50	106.65	56.98			27.37	12.97	17.77	17.77
	Order Coordination for Specified Conversion Time (per LSR)			UHL	OCOSL		45.99									
	4-Wire Unbundled HDSL Loop without manual service inquiry and facility reservation - Zone 1		1	UHL	UHL4W	11.52	279.39	203.59	109.99	20.70			27.37	12.97	17.77	17.77
	4-Wire Unbundled HDSL Loop without manual service inquiry and facility reservation - Zone 2		2	UHL	UHL4W	18.71	279.39	203.59	109.99	20.70			27.37	12.97	17.77	17.77
	4-Wire Unbundled HDSL Loop without manual service inquiry and facility reservation - Zone 3		3	UHL	UHL4W	33.90	279.39	203.59	109.99	20.70			27.37	12.97	17.77	17.77
	Order Coordination for Specified Conversion Time (per LSR)			UHL	OCOSL		45.99									
	CLEC to CLEC Conversion Charge without outside dispatch			UHL	UREWO		86.14	40.40					27.37	12.97	17.77	17.77
4-WIRE DS1 DIGITAL LOOP																
	4-Wire DS1 Digital Loop - Zone 1		1	USL	USLXX	51.74	610.13	380.26	134.77	55.97			27.37	12.97	17.77	17.77
	4-Wire DS1 Digital Loop - Zone 2		2	USL	USLXX	84.05	610.13	380.26	134.77	55.97			27.37	12.97	17.77	17.77
	4-Wire DS1 Digital Loop - Zone 3		3	USL	USLXX	152.29	610.13	380.26	134.77	55.97			27.37	12.97	17.77	17.77
	Order Coordination for Specified Conversion Time (per LSR)			USL	OCOSL		45.99									
	CLEC to CLEC Conversion Charge without outside dispatch			USL	UREWO		101.09	43.05					27.37	12.97	17.77	17.77
4-WIRE 19.2, 56 OR 64 KBPS DIGITAL GRADE LOOP																
	4 Wire Unbundled Digital 19.2 Kbps		1	UDL	UDL19	27.33	498.05	343.70	129.62	64.25			27.37	12.97	17.77	17.77
	4 Wire Unbundled Digital 19.2 Kbps		2	UDL	UDL19	44.40	498.05	343.70	129.62	64.25			27.37	12.97	17.77	17.77
	4 Wire Unbundled Digital 19.2 Kbps		3	UDL	UDL19	80.45	498.05	343.70	129.62	64.25			27.37	12.97	17.77	17.77
	4 Wire Unbundled Digital Loop 56 Kbps - Zone 1		1	UDL	UDL56	27.33	498.05	343.70	129.62	64.25			27.37	12.97	17.77	17.77
	4 Wire Unbundled Digital Loop 56 Kbps - Zone 2		2	UDL	UDL56	44.40	498.05	343.70	129.62	64.25			27.37	12.97	17.77	17.77
	4 Wire Unbundled Digital Loop 56 Kbps - Zone 3		3	UDL	UDL56	80.45	498.05	343.70	129.62	64.25			27.37	12.97	17.77	17.77
	Order Coordination for Specified Conversion Time (per LSR)			UDL	OCOSL		45.99									
	4 Wire Unbundled Digital Loop 64 Kbps - Zone 1		1	UDL	UDL64	27.33	498.05	343.70	129.62	64.25			27.37	12.97	17.77	17.77
	4 Wire Unbundled Digital Loop 64 Kbps - Zone 2		2	UDL	UDL64	44.40	498.05	343.70	129.62	64.25			27.37	12.97	17.77	17.77
	4 Wire Unbundled Digital Loop 64 Kbps - Zone 3		3	UDL	UDL64	80.45	498.05	343.70	129.62	64.25			27.37	12.97	17.77	17.77
	Order Coordination for Specified Conversion Time (per LSR)			UDL	OCOSL		45.99									
	CLEC to CLEC Conversion Charge without outside dispatch			UDL	UREWO		102.13	49.75					27.37	12.97	17.77	17.77
2-WIRE Unbundled COPPER LOOP																
	2-Wire Unbundled Copper Loop/Short including manual service inquiry & facility reservation - Zone 1		1	UCL	UCLPB	11.90	283.37	163.68	120.15	22.37			18.94	8.42		
	2-Wire Unbundled Copper Loop/Short including manual service inquiry & facility reservation - Zone 2		2	UCL	UCLPB	13.74	283.37	163.68	120.15	22.37			18.94	8.42		
	2 Wire Unbundled Copper Loop/Short including manual service inquiry & facility reservation - Zone 3		3	UCL	UCLPB	21.83	283.37	163.68	120.15	22.37			18.94	8.42		
	Order Coordination for Unbundled Copper Loops (per loop)			UCL	UCLMC		36.46	36.46								
	2-Wire Unbundled Copper Loop/Short without manual service inquiry and facility reservation - Zone 1	I	1	UCL	UCLPW	11.90	104.17	78.10					18.94	8.42		
	2-Wire Unbundled Copper Loop/Short without manual service inquiry and facility reservation - Zone 2	I	2	UCL	UCLPW	13.74	104.17	78.10					18.94	8.42		
	2-Wire Unbundled Copper Loop/Short without manual service inquiry and facility reservation - Zone 3	I	3	UCL	UCLPW	21.83	104.17	78.10					18.94	8.42		
	Order Coordination for Unbundled Copper Loops (per loop)			UCL	UCLMC		36.46	36.46								
	2-Wire Unbundled Copper Loop/Long - includes manual srvc. inquiry and facility reservation - Zone 1		1	UCL	UCL2L	35.43	270.28	150.59	120.15	22.37			18.94	8.42		
	2-Wire Unbundled Copper Loop/Long - includes manual svc. inquiry and facility reservation - Zone 2		2	UCL	UCL2L	40.91	270.28	150.59	120.15	22.37			18.94	8.42		
	2-Wire Unbundled Copper Loop/Long - includes manual svc. inquiry and facility reservation - Zone 3		3	UCL	UCL2L	65.02	270.28	150.59	120.15	22.37			18.94	8.42		
	Order Coordination for Unbundled Copper Loops (per loop)			UCL	UCLMC		36.46	36.46								
	2-Wire Unbundled Copper Loop/Long - without manual service inquiry and facility reservation - Zone 1	I	1	UCL	UCL2W	35.43	104.17	78.10					18.94	8.42		

CATEGORY	RATE ELEMENTS	Interim	Zone	BCS	USOC	RATES($) Rec	Nonrecurring First	Nonrecurring Add'l	Nonrecurring Disconnect First	Nonrecurring Disconnect Add'l	Svc Order Submitted Elec per LSR	Svc Order Submitted Manually per LSR	Incremental Charge - Manual Svc Order vs. Electronic-1st	Incremental Charge - Manual Svc Order vs. Electronic-Add'l	Incremental Charge - Manual Svc Order vs. Electronic-Disc 1st	Incremental Charge - Manual Svc Order vs. Electronic-Disc Add'l
											OSS Rates($)					
											SOMEC	SOMAN	SOMAN	SOMAN	SOMAN	SOMAN
	2-Wire Unbundled Copper Loop/Long - without manual service inquiry and facility reservation - Zone 2	I	2	UCL	UCL2W	40.91	104.17	78.10					18.94	8.42		
	2-Wire Unbundled Copper Loop/Long - without manual service inquiry and facility reservation - Zone 3	I	3	UCL	UCL2W	65.02	104.17	78.10					18.94	8.42		
	Order Coordination for Unbundled Copper Loops (per loop)			UCL	UCLMC		36.46	36.46								
	CLEC to CLEC Conversion Charge without outside dispatch (UCL-Des)			UCL	UREWO		97.23	42.48					18.94	8.42		
4-WIRE COPPER LOOP																
	4-Wire Copper Loop/Short - including manual service inquiry and facility reservation - Zone 1		1	UCL	UCL4S	16.65	331.78	212.09	130.69	27.60			27.37	8.42		
	4-Wire Copper Loop/Short - including manual service inquiry and facility reservation - Zone 2		2	UCL	UCL4S	19.22	331.78	212.09	130.69	27.60			18.94	8.42		
	4-Wire Copper Loop/Short - including manual service inquiry and facility reservation - Zone 3		3	UCL	UCL4S	30.55	331.78	212.09	130.69	27.60			18.94	8.42		
	Order Coordination for Unbundled Copper Loops (per loop)			UCL	UCLMC		36.46	36.46								
	4-Wire Copper Loop/Short - without manual service inquiry and facility reservation - Zone 1	I	1	UCL	UCL4W	16.65	104.17	78.10					18.94	8.42		
	4-Wire Copper Loop/Short - without manual service inquiry and facility reservation - Zone 2	I	2	UCL	UCL4W	19.22	104.17	78.10					18.94	8.42		
	4-Wire Copper Loop/Short - without manual service inquiry and facility reservation - Zone 3	I	3	UCL	UCL4W	30.55	104.17	78.10					18.94	8.42		
	Order Coordination for Unbundled Copper Loops (per loop)			UCL	UCLMC		36.46	36.46								
	4-Wire Unbundled Copper Loop/Long - includes manual svc. inquiry and facility reservation - Zone 1		1	UCL	UCL4L	47.56	318.70	199.00	130.69	27.60			18.94	8.42		
	4-Wire Unbundled Copper Loop/Long - includes manual svc. inquiry and facility reservation - Zone 2		2	UCL	UCL4L	54.92	318.70	199.00	130.69	27.60			18.94	8.42		
	4-Wire Unbundled Copper Loop/Long - includes manual svc. inquiry and facility reservation - Zone 3		3	UCL	UCL4L	87.30	318.70	199.00	130.69	27.60			18.94	8.42		
	Order Coordination for Unbundled Copper Loops (per loop)			UCL	UCLMC		36.46	36.46								
	4-Wire Unbundled Copper Loop/Long - without manual svc. inquiry and facility reservation - Zone 1	I	1	UCL	UCL4O	47.56	104.17	78.10					18.94	8.42		
	4-Wire Unbundled Copper Loop/Long - without manual svc. inquiry and facility reservation - Zone 2	I	2	UCL	UCL4O	54.92	104.17	78.10					18.94	8.42		
	4-Wire Unbundled Copper Loop/Long - without manual svc. inquiry and facility reservation - Zone 3	I	3	UCL	UCL4O	87.30	104.17	78.10					18.94	8.42		
	Order Coordination for Unbundled Copper Loops (per loop)			UCL	UCLMC		36.46	36.46								
	CLEC to CLEC conversion Charge without outside dispatch			UCL	UREWO		97.23	42.48					18.94	8.42		
LOOP MODIFICATION																
	Unbundled Loop Modification, Removal of Load Coils - 2 Wire pair less than or equal to 18k ft	I		UAL, UHL, UCL, UEQ, ULS, UEA, UEANL, UDL, UDC, UDN, UDL, USL	ULM2L		67.39	67.39					27.37	12.97	17.77	17.77
	Unbundled Loop Modification, Removal of Load Coils - 2 wire greater than 18k ft	I		UCL, ULS	ULM2G		337.50	337.50					27.37	12.97	17.77	17.77
	Unbundled Loop Modification Removal of Load Coils - 4 Wire less than or equal to 18K ft	I		UHL, UCL	ULM4L		67.39	67.39					27.37	12.97	17.77	17.77
	Unbundled Loop Modification Removal of Load Coils - 4 Wire pair greater than 18k ft	I		UCL	ULM4G		337.50	337.50					27.37	12.97	17.77	17.77
	Unbundled Loop Modification Removal of Bridged Tap Removal, per unbundled loop	I		UAL, UHL, UCL, UEQ, UEF, ULS, UEA, UEANL, UDL, UDC, UDN, UDL, USL	ULMBT		78.10	78.10					27.37	12.97	17.77	17.77
SUB-LOOPS																
Sub-Loop Distribution																
	Sub-Loop - Per Cross Box Location - CLEC Feeder Facility Set-Up	I		UEANL	USBSA		421.08	421.08					18.94	8.42		
	Sub-Loop - Per Cross Box Location - Per 25 Pair Panel Set-Up	I		UEANL	USBSB		67.10	67.10					18.94	8.42		

CATEGORY	RATE ELEMENTS	Interim	Zone	BCS	USOC	RATES($) Rec	Nonrecurring First	Nonrecurring Add'l	Nonrecurring Disconnect First	Nonrecurring Disconnect Add'l	Svc Order Submitted Elec per LSR	Svc Order Submitted Manually per LSR	Incremental Charge - Manual Svc Order vs. Electronic-1st	Incremental Charge - Manual Svc Order vs. Electronic-Add'l	Incremental Charge - Manual Svc Order vs. Electronic-Disc 1st	Incremental Charge - Manual Svc Order vs. Electronic-Disc Add'l
											OSS Rates($)					
							First	Add'l	First	Add'l	SOMEC	SOMAN	SOMAN	SOMAN	SOMAN	SOMAN
	Sub-Loop - Per Building Equipment Room - CLEC Feeder Facility Set-Up	I		UEANL	USBSC		394.74	394.74					18.94	8.42		
	Sub-Loop - Per Building Equipment Room - Per 25 Pair Panel Set-Up	I		UEANL	USBSD		154.57	154.57					18.94	8.42		
	Sub-Loop Distribution Per 2-Wire Analog Voice Grade Loop - Statewide		sw	UEANL	USBN2	9.12	207.01	171.32					18.94	8.42		
	Order Coordination for Unbundled Sub-Loops, per sub-loop pair			UEANL	USBMC		45.99	45.99								
	Sub-Loop Distribution Per 4-Wire Analog Voice Grade Loop - Statewide		sw	UEANL	USBN4	8.32	219.35	72.99	123.72	28.77			18.94	8.42		
	Order Coordination for Unbundled Sub-Loops, per sub-loop pair			UEANL	USBMC		45.99	45.99								
	Sub-Loop 2-Wire Intrabuilding Network Cable (INC)	I		UEANL	USBR2	1.61	137.03	41.59	115.85	19.17			18.94	8.42		
	Order Coordination for Unbundled Sub-Loops, per sub-loop pair			UEANL	USBMC		45.99	45.99								
	Sub-Loop 4-Wire Intrabuilding Network Cable (INC)	I		UEANL	USBR4	2.96	176.46	55.11	122.17	19.57			18.94	8.42		
	Order Coordination for Unbundled Sub-Loops, per sub-loop pair			UEANL	USBMC		45.99	45.99								
	2 Wire Copper Unbundled Sub-Loop Distribution - Statewide		sw	UEF	UCS2X	5.54	175.16	55.50	108.86	24.53			18.94	8.42		
	Order Coordination for Unbundled Sub-Loops, per sub-loop pair			UEF	USBMC		45.99	45.99								
	4 Wire Copper Unbundled Sub-Loop Distribution - Statewide		sw	UEF	UCS4X	6.89	219.35	72.99	123.72	28.77			18.94	8.42		
	Order Coordination for Unbundled Sub-Loops, per sub-loop pair			UEF	USBMC		45.99	45.99								
	Unbundled Sub-Loop Modification															
	Unbundled Sub-Loop Modification - 2-W Copper Dist Load Coil/Equip Removal per 2-W PR			UEF	ULM2X		355.71	12.26					18.94	8.42		
	Unbundled Sub-loop Modification - 4-W Copper Dist Load Coil/Equip Removal per 4-W PR			UEF	ULM4X		355.71	12.26					18.94	8.42		
	Unbundled Sub-loop Modification - 2-w/4-w Copper Dist Bridged Tap Removal, per PR unloaded			UEF	ULM4T		560.55	14.30					18.94	8.42		
	Unbundled Network Terminating Wire (UNTW)															
	Unbundled Network Terminating Wire (UNTW) per Pair			UENTW	UENPP	1.37	2.48	2.48	1.74	1.74			18.94	8.42		
	Network Interface Device (NID)															
	Network Interface Device (NID) - 1-2 lines			UENTW	UND12		86.46	56.75					18.94	8.42		
	Network Interface Device (NID) - 1-6 lines			UENTW	UND16		127.93	98.21					18.94	8.42		
	Network Interface Device Cross Connect - 2 W			UENTW	UNDC2		11.73	11.73					18.94	8.42		
	Network Interface Device Cross Connect - 4W			UENTW	UNDC4		11.73	11.73					18.94	8.42		
SUB-LOOPS																
	Sub-Loop Feeder															
	USL-Feeder, DS0 Set-up per Cross Box location - CLEC Distribution Facility set-up			UEA, UDN,UCL,UDL,UDC	USBFW		421.08						18.94	8.42		
	USL Feeder - DS0 Set-up per Cross Box location - per 25 pair set-up			UEA, UDN,UCL,UDL,UDC	USBFX		67.10	67.10					18.94	8.42		
	USL Feeder DS1 Set-up at DSX location, per DS1 termination			USL	USBFZ		519.95	11.32					18.94	8.42		
	Unbundled Sub-Loop Feeder Loop, 2 Wire Ground-Start, Voice Grade- Statewide		sw	UEA	USBFA	8.58	206.44	170.05	119.95	27.04			18.94	8.42		
	Order Coordination for Specified Conversion Time, per LSR			UEA	OCOSL		45.99									
	Unbundled Sub-Loop Feeder Loop, 2 Wire Loop-Start, Voice Grade - Statewide		sw	UEA	USBFB	8.58	206.44	170.05	119.95	27.04			18.94	8.42		
	Order Coordination for Specified Time Conversion, per LSR			UEA	OCOSL		45.99									
	Unbundled Sub-Loop Feeder Loop, 2 Wire Reverse Battery, Voice Grade Loop - Statewide		sw	UEA	USBFC	8.58	206.44	170.05	119.95	27.04			18.94	8.42		
	Order Coordination For Specified Conversion Time, per LSR			UEA	OCOSL		45.99									
	Unbundled Sub-Loop Feeder Loop, 4 Wire Ground-Start, Voice Grade - Statewide		sw	UEA	USBFD	19.91	243.41	81.32	134.77	33.93			18.94	8.42		
	Order Coordination For Specified Conversion Time, Per LSR			UEA	OCOSL		45.99									
	Unbundled Sub-Loop Feeder Loop, 4 Wire Loop-Start, Voice Grade - Statewide		sw	UEA	USBFE	19.91	243.41	81.32	134.77	33.93			18.94	8.42		

CATEGORY	RATE ELEMENTS	Interim	Zone	BCS	USOC	RATES($) Rec	Nonrecurring First	Nonrecurring Add'l	Nonrecurring Disconnect First	Nonrecurring Disconnect Add'l	Svc Order Submitted Elec per LSR	Svc Order Submitted Manually per LSR	Incremental Charge - Manual Svc Order vs. Electronic-1st	Incremental Charge - Manual Svc Order vs. Electronic-Add'l	Incremental Charge - Manual Svc Order vs. Electronic-Disc 1st	Incremental Charge - Manual Svc Order vs. Electronic-Disc Add'l
											OSS Rates($)					
											SOMEC	SOMAN	SOMAN	SOMAN	SOMAN	SOMAN
	Order Coordination For Specified Conversion Time, Per LSR			UEA	OCOSL		45.99									
	Unbundled Sub-Loop Feeder Loop, 2-Wire ISDN BRI - Statewide		sw	UDN	USBFF	17.73	208.50	62.31	119.68	29.58			19.99	19.99	19.99	19.99
	Order Coordination For Specified Conversion Time, Per LSR			UDN	OCOSL		45.99									
	Unbundled Sub-Loop Feeder, 2 Wire UDC (IDSL compatible)		sw	UDC	USBFS	17.73	208.50	62.31	119.68	29.58			19.99	19.99	19.99	19.99
	Unbundled Sub-Loop Feeder Loop, 4-Wire DS1 - Statewide		sw	USL	USBFG	79.30	203.69	128.76	124.09	34.80			19.99	19.99	19.99	19.99
	Order Coordination For Specified Conversion Time, Per LSR			USL	OCOSL		45.99									
	Unbundled Sub-Loop Feeder Loop, 2-Wire Copper Loop - Statewide		sw	UCL	USBFH	7.22	195.38	63.15	119.68	29.58			18.94	8.42		
	Order Coordination For Specified Conversion Time, per LSR			UCL	OCOSL		45.99									
	Sub-Loop Feeder - Per 4-Wire Copper Loop - Statewide		sw	UCL	USBFJ	13.72	243.41	81.32	134.77	33.93			18.94	8.42		
	Order Coordination For Specified Conversion Time, per LSR			UCL	OCOSL		45.99									
	Sub-Loop Feeder - Per 4-Wire 19.2 Kbps Digital Grade Loop		sw	UDL	USBFN	24.50	243.41	81.32	134.77	33.93			19.99	19.99	19.99	19.99
	Sub-Loop Feeder - Per 4-Wire 56 Kbps Digital Grade Loop - Statewide		sw	UDL	USBFO	24.50	243.41	81.32	134.77	33.93			19.99	19.99	19.99	19.99
	Order Coordination For Specified Time Conversion, per LSR			UDL	OCOSL		45.99									
	Sub-Loop Feeder - Per 4-Wire 64 Kbps Digital Grade Loop - Statewide		sw	UDL	USBFP	24.50	243.41	81.32	134.77	33.93			19.99	19.99	19.99	19.99
	Order Coordination For Specified Conversion Time, per LSR			UDL	OCOSL		45.99									
SUB-LOOPS																
Sub-Loop Feeder																
	Sub Loop Feeder - DS3 - Per Mile Per Month	I		UE3	1L5SL	13.55										
	Sub Loop Feeder - DS3 - Facility Termination Per Month	I		UE3	USBF1	332.40	3,384.00	407.00	160.47	90.97			31.31	31.31	3.93	3.93
	Sub Loop Feeder – STS-1 – Per Mile Per Month	I		UDLSX	1L5SL	13.55										
	Sub Loop Feeder - STS-1 - Facility Termination Per Month	I		UDLSX	USBF7	357.36	3,384.00	407.00	160.47	90.97			31.31	31.31	3.93	3.93
	Sub Loop Feeder – OC-3 – Per Mile Per Month	I		UDLO3	1L5SL	10.28										
	Sub Loop Feeder - OC-3 - Facility Termination Protection Per Month	I		UDLO3	USBF5	54.89										
	Sub Loop Feeder - OC-3 - Facility Termination Per Month	I		UDLO3	USBF2	538.69	3,384.00	407.00	160.47	90.97			31.31	31.31	3.93	3.93
	Sub Loop Feeder - OC-12 - Per Mile Per Month	I		UDL12	1L5SL	12.66										
	Sub Loop Feeder - OC-12 - Facility Termination Protection Per Month	I		UDL12	USBF6	620.18										
	Sub Loop Feeder - OC-12 - Facility Termination Per Month	I		UDL12	USBF3	1,729.00	3,384.00	407.00	160.47	90.97			31.31	31.31	3.93	3.93
	Sub Loop Feeder - OC-48 - Per Mile Per Month	I		UDL48	1L5SL	41.51										
	Sub Loop Feeder - OC-48 - Facility Termination Protection Per Month	I		UDL48	USBF9	310.30										
	Sub Loop Feeder - OC-48 - Facility Termination Per Month	I		UDL48	USBF4	1,495.00	3,570.00	407.00	160.47	90.97			31.31	31.31	3.93	3.93
	Sub Loop Feeder - OC-12 Interface On OC-48	I		UDL48	USBF8	350.09	788.09	407.00	160.47	90.97			31.31	31.31	3.93	3.93
UNBUNDLED LOOP CONCENTRATION																
	Unbundled Loop Concentration - System A (TR008)			ULC	UCT8A	441.42	650.81	650.81					19.99	19.99	19.99	19.99
	Unbundled Loop Concentration - System B (TR008)			ULC	UCT8B	52.97	271.17	271.17					19.99	19.99	19.99	19.99
	Unbundled Loop Concentration - System A (TR303)			ULC	UCT3A	478.93	650.81	650.81								
	Unbundled Loop Concentration - System B (TR303)			ULC	UCT3B	89.26	271.17	271.17					19.99	19.99	19.99	19.99
	Unbundled Loop Concentration - DS1 Loop Interface Card			ULC	UCTCO	5.04	126.57	92.14	33.57	9.40			19.99	19.99	19.99	19.99
	Unbundled Loop Concentration - ISDN Loop Interface (Brite Card)			UDN	ULCC1	8.00	21.07	20.96	10.78	10.71			19.99	19.99	19.99	19.99
	Unbundled Loop Concentration - UDC Loop Interface (Brite Card)			UDC	ULCCU	8.00	21.07	20.96	10.78	10.71			19.99	19.99	19.99	19.99
	Unbundled Loop Concentration - -2 Wire Voice-Loop Start or Ground Start Loop Interface (POTS Card)			UEA	ULCC2	2.00	21.07	20.96	10.78	10.71			18.94	8.42		
	Unbundled Loop Concentration - 2 Wire Voice - Reverse Battery Loop Interface (SPOTS Card)			UEA	ULCCR	11.89	21.07	20.96	10.78	10.71			18.94	8.42		
	Unbundled Loop Concentration - 4 Wire Voice Loop Interface (Specials Card)			UEA	ULCC4	7.09	21.07	20.96	10.78	10.71			18.94	8.42		
	Unbundled Loop Concentration - TEST CIRCUIT Card			ULC	UCTTC	34.67	21.07	20.96	10.78	10.71			19.99	19.99	19.99	19.99
	Unbundled Loop Concentration - Digital 19.2 Kbps Data Loop Interface			UDL	ULCC7	10.51	21.07	20.96	10.78	10.71			19.99	19.99	19.99	19.99
	Unbundled Loop Concentration - Digital 56 Kbps Data Loop Interface			UDL	ULCC5	10.51	21.07	20.96	10.78	10.71			19.99	19.99	19.99	19.99

UNBUNDLED NETWORK ELEMENTS - Alabama														Attachment: 2		Exhibit: B	
CATEGORY		RATE ELEMENTS	Interim	Zone	BCS	USOC	RATES($)					Svc Order Submitted Elec per LSR	Svc Order Submitted Manually per LSR	Incremental Charge - Manual Svc Order vs. Electronic-1st	Incremental Charge - Manual Svc Order vs. Electronic-Add'l	Incremental Charge - Manual Svc Order vs. Electronic-Disc 1st	Incremental Charge - Manual Svc Order vs. Electronic-Disc Add'l
							Rec	Nonrecurring		Nonrecurring Disconnect		OSS Rates($)					
								First	Add'l	First	Add'l	SOMEC	SOMAN	SOMAN	SOMAN	SOMAN	SOMAN
		Unbundled Loop Concentration - Digital 64 Kbps Data Loop Interface			UDL	ULCC6	10.51	21.07	20.96	10.78	10.71			19.99	19.99	19.99	19.99
UNE OTHER, PROVISIONING ONLY - NO RATE																	
		NID - Dispatch and Service Order for NID installation			UENTW	UNDBX											
		UNTW Circuit Id Establishment, Provisioning Only - No Rate			UENTW	UENCE											
		Unbundled Contract Name, Provisioning Only - No Rate			UEANL,UEF,UEQ,UENTW	UNECN											
UNE OTHER, PROVISIONING ONLY - NO RATE																	
		Unbundled Contact Name, Provisioning Only - no rate			UAL,UCL,UDC,UDL,UDN,UEA,UHL,ULC	UNECN	0.00	0.00									
		Unbundled Sub-Loop Feeder-2 Wire Cross Box Jumper - no rate			UEA,UDN,UCL,UDC	USBFQ	0.00	0.00									
		Unbundled Sub-Loop Feeder-4 Wire Cross Box Jumper - no rate			UEA,USL,UCL,UDL	USBFR	0.00	0.00									
		Unbundled DS1 Loop - Superframe Format Option - no rate			USL	CCOSF	0.00	0.00									
		Unbundled DS1 Loop - Expanded Superframe Format option - no rate			USL	CCOEF	0.00	0.00									
HIGH CAPACITY UNBUNDLED LOCAL LOOP																	
		High Capacity Unbundled Local Loop - DS3 - Per Mile per month			UE3	1L5ND	10.16										
		High Capacity Unbundled Local Loop - DS3 - Facility Termination per month			UE3	UE3PX	374.52	903.03	527.87	238.97	167.16			31.31	31.31	3.93	3.93
		High Capacity Unbundled Local Loop - STS-1 - Per Mile per month			UDLSX	1L5ND	10.16										
		High Capacity Unbundled Local Loop - STS-1 - Facility Termination per month			UDLSX	UDLS1	387.67	903.03	527.87	238.97	167.16			31.31	31.31	3.93	3.93
LOOP MAKE-UP																	
		Loop Makeup - Preordering Without Reservation, per working or spare facility queried (Manual).	I		UMK	UMKLW		131.22	131.22								
		Loop Makeup - Preordering With Reservation, per spare facility queried (Manual).	I		UMK	UMKLP		136.93	136.93								
		Loop Makeup--With or Without Reservation, per working or spare facility queried (Mechanized)	I		UMK	PSUMK		0.9809855	0.9809855								
HIGH FREQUENCY SPECTRUM																	
	SPLITTERS-CENTRAL OFFICE BASED																
		Line Sharing Splitter, per System 96 Line Capacity			ULS	ULSDA	178.25	377.58	0.00	355.96	0.00			27.37	12.97	17.77	17.77
		Line Sharing Splitter, per System 24 Line Capacity			ULS	ULSDB	44.56	377.58	0.00	355.96	0.00			27.37	12.97	17.77	17.77
		Line Sharing Splitter, Per System, 8 Line Capacity	I		ULS	ULSD8	12.73	377.58	0.00	355.96	0.00			27.37	12.97	17.77	17.77
		Line Sharing-DLEC Owned Splitter in CO-CFA activaton-deactivation (per LSOD)			ULS	ULSDG		172.94		99.67				27.37	12.97	17.77	17.77
	END USER ORDERING-CENTRAL OFFICE BASED-HIGH FREQUENCY SPECTRUM AKA LINE SHARING																
		Line Sharing - per Line Activation (BST Owned splitter)			ULS	ULSDC	0.61	37.01	21.19	20.02	9.83			27.37	12.97	17.77	17.77
		Line Sharing - per Subsequent Activity per Line Rearrangement(BST Owned Splitter			ULS	ULSDS		32.77	16.37					27.37	12.97	17.77	17.77
		Line Sharing - per Subsequent Activity per Line Rearrangement(DLEC Owned Splitter			ULS	ULSCS		32.77	16.37					27.37	12.97	17.77	17.77
		Line Sharing - per Line Activation (DLEC owned Splitter)	I		ULS	ULSCC	0.61	47.44	19.31	20.02	9.83			27.37	12.97	17.77	17.77
		Line Splitting - per line activation DLEC owned splitter	I		UEPSR UEPSB	UREOS	0.61										
		Line Splitting - per line activation BST owned - physical	I		UEPSR UEPSB	UREBP	0.641	37.01	21.19	20.02	9.83			27.37	12.97	17.77	17.77
		Line Splitting - per line activation BST owned - virtual	I		UEPSR UEPSB	UREBV	0.639	37.01	21.19	20.02	9.83			27.37	12.97	17.77	17.77
UNBUNDLED DEDICATED TRANSPORT																	
	NOTE: INTEROFFICE CHANNEL DEDICATED TRANSPORT - minimum billing period - below DS3=one month, DS3/STS-1=four months																
	INTEROFFICE CHANNEL - DEDICATED TRANSPORT																
		Interoffice Channel - Dedicated Transport - 2-Wire Voice Grade - Per Mile per month			U1TVX	1L5XX	0.0101										
		Interoffice Channel - Dedicated Transport- 2- Wire Voice Grade - Facility Termination per month			U1TVX	U1TV2	24.15	81.07	54.82	33.47	13.79			31.31	31.31	3.93	3.93

CATEGORY	RATE ELEMENTS	Interim	Zone	BCS	USOC	RATES($)					Svc Order Submitted Elec per LSR	Svc Order Submitted Manually per LSR	Incremental Charge - Manual Svc Order vs. Electronic-1st	Incremental Charge - Manual Svc Order vs. Electronic-Add'l	Incremental Charge - Manual Svc Order vs. Electronic-Disc 1st	Incremental Charge - Manual Svc Order vs. Electronic-Disc Add'l
						Rec	Nonrecurring		Nonrecurring Disconnect		OSS Rates($)					
							First	Add'l	First	Add'l	SOMEC	SOMAN	SOMAN	SOMAN	SOMAN	SOMAN
	Interoffice Channel - Dedicated Transpor t- 2-Wire Voice Grade Rev Bat. - Per Mile per month			U1TVX	1L5XX	0.0101										
	Interoffice Channel - Dedicated Transport- 2- Wire VG Rev Bat. - Facility Termination per month			U1TVX	U1TR2	24.15	81.07	54.82	33.47	13.79			31.31	31.31	3.93	3.93
	Interoffice Channel - Dedicated Transport - 4-Wire Voice Grade - Per Mile per month			U1TVX	1L5XX	0.0101										
	Interoffice Channel - Dedicated Transport - 4- Wire Voice Grade - Facility Termination per month			U1TVX	U1TV4	21.41	81.07	54.82	33.47	13.79			31.31	31.31	3.93	3.93
	Interoffice Channel - Dedicated Transport - 56 kbps - per mile per month			U1TDX	1L5XX	0.0101										
	Interoffice Channel - Dedicated Transport - 56 kbps - Facility Termination per month			U1TDX	U1TD5	17.28	81.07	54.82	33.47	13.79			31.31	31.31	3.93	3.93
	Interoffice Channel - Dedicated Transport - 64 kbps - per mile per month			U1TDX	1L5XX	0.0101										
	Interoffice Channel - Dedicated Transport - 64 kbps - Facility Termination per month			U1TDX	U1TD6	17.28	81.07	54.82	33.47	13.79			31.31	31.31	3.93	3.93
	Interoffice Channel - Dedicated Channel - DS1 - Per Mile per month			U1TD1	1L5XX	0.2067										
	Interoffice Channel - Dedicated Tranport - DS1 - Facility Termination per month			U1TD1	U1TF1	68.75	178.53	163.61	32.70	28.88			31.31	31.31	3.93	3.93
	Interoffice Channel - Dedicated Transport - DS3 - Per Mile per month			U1TD3	1L5XX	4.67										
	Interoffice Channel - Dedicated Transport - DS3 - Facility Termination per month			U1TD3	U1TF3	804.02	557.49	325.51	120.39	116.91			31.31	31.31	3.93	3.93
	Interoffice Channel - Dedicated Transport - STS-1 - Per Mile per month			U1TS1	1L5XX	4.67										
	Interoffice Channel - Dedicated Transport - STS-1 - Facility Termination per month			U1TS1	U1TFS	801.57	557.49	325.51	120.39	116.91			31.31	31.31	3.93	3.93
	LOCAL CHANNEL - DEDICATED TRANSPORT															
	NOTE: LOCAL CHANNEL DEDICATED TRANSPORT - minimum billing period - below DS3=one month, DS3/STS-1=four months															
	Local Channel - Dedicated - 2-Wire Voice Grade Per Month			ULDVX	ULDV2	15.96	386.19	66.33	73.28	6.39			31.31	31.31	3.93	3.93
	Local Channel - Dedicated - 2-Wire Voice Grade Rev Bat per month			ULDVX	ULDR2	15.96	386.19	66.33	73.28	6.39			31.31	31.31	3.93	3.93
	Local Channel - Dedicated - 4-Wire Voice Grade per month			UNDVX	ULDV4	17.06	387.19	67.20	74.22	7.33			31.31	31.31	3.93	3.93
	Local Channel - Dedicated - DS1 per month - Zone 1		1	ULDD1	ULDF1	41.52	354.94	307.43	44.38	30.52			31.31	31.31	3.93	3.93
	Local Channel - Dedicated - DS1 per month - Zone 2		2	ULDD1	ULDF1	61.05	354.94	307.43	44.38	30.52			31.31	31.31	3.93	3.93
	Local Channel - Dedicated - DS1 per month - Zone 3		3	ULDD1	ULDF1	47.29	354.94	307.43	44.38	30.52			31.31	31.31	3.93	3.93
	Local Channel - Dedicated - DS3 - Per Mile per month			ULDD3	1L5NC	7.91										
	Local Channel - Dedicated - DS3 - Facility Termination per month			ULDD3	ULDF3	476.04	903.03	527.87	238.87	167.16			31.31	31.31	3.93	3.93
	Local Channel - Dedicated - STS-1- Per Mile per month			ULDS1	1L5NC	7.91										
	Local Channel - Dedicated - STS-1 - Facility Termination per month			ULDS1	ULDFS	466.84	903.03	527.87	238.87	167.16			31.31	31.31	3.93	3.93
MULTIPLEXERS																
	Channelization - DS1 to DS0 Channel System			UXTD1	MQ1	122.50	182.08	125.14	21.07	19.58			31.31	31.31	3.93	3.93
	OCU-DP COCI (data) - DS1 to DS0 Channel System - per month (2.4-64kbs)			UDL	1D1DD	1.36	13.15	9.43					31.31	31.31	3.93	3.93
	2-wire ISDN COCI (BRITE) - DS1 to DS0 Channel Systsem - per month			UDN	UC1CA	2.92	13.15	9.43					31.31	31.31	3.93	3.93
	Voice Grade COCI - DS1 to DS0 Channel System - per month			UEA	1D1VG	0.64	13.15	9.43					31.31	31.31	3.93	3.93
	DS3 to DS1 Channel System per month			UXTD3	MQ3	201.37	356.28	187.94	66.51	63.65			31.31	31.31	3.93	3.93
	STS1 to DS1 Channel System per month			UXTS1	MQ3	201.37	356.28	187.94	66.51	63.65			31.31	31.31	3.93	3.93
	DS3 Interface Unit (DS1 COCI) used with Loop per month			USL	UC1D1	15.39	13.15	9.43					31.31	31.31	3.93	3.93
	DS3 Interface Unit (DS1 COCI) used with Local Channel per month			ULDD1	UC1D1	15.39	13.15	9.43					31.31	31.31	3.93	3.93
	DS3 Interface Unit (DS1 COCI) used with Interoffice Channel per month			U1TD1	UC1D1	15.39	13.15	9.43					31.31	31.31	3.93	3.93
DARK FIBER																

CATEGORY	RATE ELEMENTS	Interim	Zone	BCS	USOC	RATES($) Rec	Nonrecurring First	Nonrecurring Add'l	Nonrecurring Disconnect First	Nonrecurring Disconnect Add'l	Svc Order Submitted Elec per LSR	Svc Order Submitted Manually per LSR	Incremental Charge - Manual Svc Order vs. Electronic-1st	Incremental Charge - Manual Svc Order vs. Electronic-Add'l	Incremental Charge - Manual Svc Order vs. Electronic-Disc 1st	Incremental Charge - Manual Svc Order vs. Electronic-Disc Add'l
											OSS Rates($)					
							First	Add'l	First	Add'l	SOMEC	SOMAN	SOMAN	SOMAN	SOMAN	SOMAN
	Dark Fiber, Four Fiber Strands, Per Route Mile or Fraction Thereof per month - Local Channel			UDF	1L5DC	68.84										
	NRC Dark Fiber - Local Channel			UDF	UDFC4		1,278.17	275.73	634.11	395.32			31.31	31.31	3.93	3.93
	Dark Fiber, Four Fiber Strands, Per Route Mile or Fraction Thereof per month - Interoffice Channel			UDF	1L5DF	25.53										
	NRC Dark Fiber - Interoffice Channel			UDF	UDF14		1,278.17	275.73	634.11	395.32			31.31	31.31	3.93	3.93
	Dark Fiber, Four Fiber Strands, Per Route Mile or Fraction Thereof per month - Local Loop			UDF	1L5DL	68.84										
	NRC Dark Fiber - Local Loop			UDF	UDFL4		1,278.17	275.73	634.11	395.32			31.31	31.31	3.93	3.93
TRANSPORT OTHER																
	Optional Features & Functions:															
8XX ACCESS TEN DIGIT SCREENING																
	8XX Access Ten Digit Screening, Per Call			OHD		0.0005										
	8XX Access Ten Digit Screening, Reservation Charge Per 8XX Number Reserved			OHD	N8R1X		7.13	0.97					27.37	27.37	17.75	17.75
	8XX Access Ten Digit Screening, Per 8XX No. Established W/O POTS Translations			OHD			15.88	1.97	10.04	0.97			27.37	27.37	17.75	17.75
	8XX Access Ten Digit Screening, Per 8XX No. Established With POTS Translations			OHD	N8FTX		15.88	1.97	10.04	0.97			27.37	27.37	17.75	17.75
	8XX Access Ten Digit Screening, Customized Area of Service Per 8XX Number			OHD	N8FCX		5.69	2.85					27.37	27.37	17.75	17.75
	8XX Access Ten Digit Screening, Multiple InterLATA CXR Routing Per CXR Requested Per 8XX No.			OHD	N8FMX		6.66	3.81					27.37	27.37	17.75	17.75
	8XX Access Ten Digit Screening, Change Charge Per Request			OHD	N8FAX		8.10	0.97					27.37	27.37	17.75	17.75
	8XX Access Ten Digit Screening, Call Handling and Destination Features			OHD	N8FDX		5.69						27.37	27.37	17.75	17.75
LINE INFORMATION DATA BASE ACCESS (LIDB)																
	LIDB Common Transport Per Query			OQT		0.00004										
	LIDB Validation Per Query			OQU		0.0142										
	LIDB Originating Point Code Establishment or Change			OQT, OQU	NRPBX		64.36						27.37	27.37	17.75	17.75
SIGNALING (CCS7)																
	CCS7 Signaling Termination, Per STP Port			UDB	PT8SX	148.72										
	CCS7 Signaling Usage, Per TCAP Message			UDB		0.0001										
	CCS7 Signaling Connection, Per link (A link)			UDB	TPP++	18.79	171.98	171.98	135.70	135.70			25.93	25.93	16.31	16.31
	CCS7 Signaling Connection, Per link (B link) (also known as D link)			UDB	TPP++	18.79	171.98	171.98	135.70	135.70			25.93	25.93	16.31	16.31
	CCS7 Signaling Usage, Per ISUP Message			UDB		0.00004										
	CCS7 Signaling Usage Surrogate, per link per LATA			UDB	STU56	376.12										
	CCS7 Signaling Point Code, per Originating Point Code Establishment or Change, per STP affected			UDB	CCAPO		40.00	40.00					25.93	25.93	16.31	16.31
	CCS7 Signaling Point Code, per Destination Point Code Establishment or Change, Per Stp Affected			UDB	CCAPD		8.00	8.00					25.93	25.93	16.31	16.31
E911 SERVICE																
	Local Channel - Dedicated - 2-wr Voice Grade					13.91	382.95	62.40					18.94	8.42		
	Interoffice Transport - Dedicated - 2-wr Voice Grade Per Mile					0.0222										
	Interoffice Transport - Dedicated - 2-wr Voice Grade Per Facility Termination					17.07	79.61	36.08					18.94	18.94		
	Local Channel - Dedicated - DS1					38.36	356.15	312.89					44.22			
	Interoffice Transport - Dedicated - DS1 Per Mile					0.4523										
	Interoffice Transport - Dedicated - DS1 Per Facility Termination					78.47	147.07	111.75					18.94	18.94		
CALLING NAME (CNAM) SERVICE																
	CNAM for DB Owners, Per Query			OQV		0.01										
	CNAM for Non DB Owners, Per Query			OQV		0.01										
	CNAM (Non-Databs Owner), NRC, applies when using the Character Based User Interface (CHUI)			OQV	CDDCH		595.00	595.00					27.37	27.37	17.75	17.75
OPERATOR CALL PROCESSING																
	Oper. Call Processing - Oper. Provided, Per Min. - Using BST LIDB					1.20										

CATEGORY	RATE ELEMENTS	Interim	Zone	BCS	USOC	RATES($) Rec	Nonrecurring First	Nonrecurring Add'l	Nonrecurring Disconnect First	Nonrecurring Disconnect Add'l	Svc Order Submitted Elec per LSR	Svc Order Submitted Manually per LSR	Incremental Charge - Manual Svc Order vs. Electronic-1st	Incremental Charge - Manual Svc Order vs. Electronic-Add'l	Incremental Charge - Manual Svc Order vs. Electronic-Disc 1st	Incremental Charge - Manual Svc Order vs. Electronic-Disc Add'l
											OSS Rates($)					
							First	Add'l	First	Add'l	SOMEC	SOMAN	SOMAN	SOMAN	SOMAN	SOMAN
	Oper. Call Processing - Oper. Provided, Per Min. - Using Foreign LIDB					1.24										
	Oper. Call Processing - Fully Automated, per Call - Using BST LIDB					0.20										
	Oper. Call Processing - Fully Automated, per Call - Using Foreign LIDB					0.20										
INWARD OPERATOR SERVICES																
	Inward Operator Services - Verification, Per Minute					1.15										
	Inward Operator Services - Verification and Emergency Interrupt - Per Minute					1.15										
BRANDING - OPERATOR CALL PROCESSING																
	Recording of Custom Branded OA Announcement				CBAOS		7,000.00	7,000.00					19.99	19.99	19.99	19.99
	Loading of Custom Branded OA Announcement per shelf/NAV				CBAOL		500.00	500.00					19.99	19.99		
	Unbranding via OLNS for UNEP CLEC															
	Loading of OA per OCN (Regional)						1,200.00	1,200.00								
DIRECTORY ASSISTANCE SERVICES																
	DIRECTORY ASSISTANCE ACCESS SERVICE															
	Directory Assistance Access Service Calls, Charge Per Call					0.275										
	DIRECTORY ASSISTANCE CALL COMPLETION ACCESS SERVICE (DACC)															
	Directory Assistance Call Completion Access Service (DACC), Per Call Attempt					0.10										
	NUMBER SERVICES INTERCEPT ACCESS SERVICE															
DIRECTORY ASSISTANCE SERVICES																
	DIRECTORY ASSISTANCE DATA BASE SERVICE (DADS)															
	Directory Assistance Data Base Service Charge Per Listing					0.04										
	Directory Assistance Data Base Service, per month				DBSOF	150.00										
BRANDING - DIRECTORY ASSISTANCE																
	Facility Based CLEC															
	Recording and Provisioning of DA Custom Branded Announcement			AMT	CBADA		6,000.00	6,000.00								
	Loading of Custom Branded Announcement per DRAM Card/Switch			AMT	CBADC		1,170.00	1,170.00								
	UNEP CLEC															
	Recording of DA Custom Branded Announcement						3,000.00	3,000.00								
	Loading of DA Custom Branded Announcement per DRAM Card/Switch per OCN						1,170.00	1,170.00								
	Unbranding via OLNS for UNEP CLEC															
	Loading of DA per OCN (1 OCN per Order)						420.00	420.00								
	Loading of DA per Switch per OCN						16.00	16.00								
SELECTIVE ROUTING																
	Selective Routing Per Unique Line Class Code Per Request Per Switch				USRCR		230.60	230.60					40.71	9.58		
VIRTUAL COLLOCATION																
	Virtual Collocation - Application Cost			AMTFS	EAF		2,848.30	2,848.30								
	Virtual Collocation - Cable Installation Cost, per cable			AMTFS	ESPCX		2,750.00	2,750.00								
	Virtual Collocation - Floor Space, per sq. ft.			AMTFS	ESPVX	3.20										
	Virtual Collocation - Power, per breaker amp			AMTFS	ESPAX	3.48										
	Virtual Collocation - Cable Support Structure, per entrance cable			AMTFS	ESPSX	13.35										
	Virtual Collocation - 2-wire Cross Connects (loop)			UEANL,UEA,UDN,UDC,UAL,UHL,UCL,UEQ, AMTFS, UDL, UNCVX, UNCDX, UNCNX	UEAC2	0.28	30.76	29.40	12.75	11.38			19.99	19.99	19.99	19.99
	Virtual Collocation - 4-wire Cross Connects (loop)			UEA,UHL,UCL,UDL, AMTFS, UAL, UDN, UNCVX, UNCDX	UEAC4	0.56	66.71	50.43	12.82	11.39			19.99	19.99	19.99	19.99

UNBUNDLED NETWORK ELEMENTS - Alabama													Attachment: 2		Exhibit: B	
CATEGORY	RATE ELEMENTS	Interim	Zone	BCS	USOC	RATES($)					Svc Order Submitted Elec per LSR	Svc Order Submitted Manually per LSR	Incremental Charge - Manual Svc Order vs. Electronic-1st	Incremental Charge - Manual Svc Order vs. Electronic-Add'l	Incremental Charge - Manual Svc Order vs. Electronic-Disc 1st	Incremental Charge - Manual Svc Order vs. Electronic-Disc Add'l
						Rec	Nonrecurring		Nonrecurring Disconnect		OSS Rates($)					
							First	Add'l	First	Add'l	SOMEC	SOMAN	SOMAN	SOMAN	SOMAN	SOMAN
	Virtual Collocation - 2-Fiber Cross Connects			AMTFS,UDL12, UDLO3, U1T48, U1T12, U1T03, ULDO3, ULD12, ULD48, UDF	CNC2F	12.10	55.46	39.18	16.83	13.27			19.99	19.99	19.99	19.99
	Virtual Collocation - 4-Fiber Cross Connects			AMTFS,UDL12, UDLO3, U1T48, U1T12, U1T03, ULDO3, ULD12, ULD48, UDF	CNC4F	21.75	66.71	50.43	21.86	18.31			19.99	19.99	19.99	19.99
	Virtual collocation - DS1 Cross Connects			USL,ULC,AMTFS, ULR, UXTD1, UNC1X, ULDD1, U1TD1, USLEL, UNLD1	CNC1X	7.50	155.00	14.00								
	Virtual collocation - DS3 Cross Connects			USL,ULC,AMTFS,UE3, U1TD3, UXTS1, UXTD3, UNC3X, UNCSX, ULDD3, U1TS1, ULDS1, UDLSX, UNLD3	CND3X	56.25	151.90	11.83								
	Virtual Collocation - Co-Carrier Cross Connects - Fiber Cable Support Structure, per linear foot			AMTFS	VE1CB	0.0026										
	Virtual Collocation - Co-Carrier Cross Connects - Copper/Coax Cable Support Structure, per linear ft			AMTFS	VE1CD	0.0038										
	Virtual Collocation - Co-Carrier Cross Connects - Fiber Cable Support Structure,per cable			AMTFS	VE1CC		535.37									
	Virtual Collocation - Co-Carrier Cross Connects - Copper/Coax Cable Support Structure, per cable			AMTFS	VE1CE		535.37									
	Virtual collocation - Security Escort - Basic, per half hour			AMTFS	SPTBX		41.00	25.00								
	Virtual collocation - Security Escort - Overtime, per half hour			AMTFS	SPTOX		48.00	30.00								
	Virtual collocation - Security Escort - Premium, per half hour			AMTFS	SPTPX		55.00	35.00								
	Virtual collocation - Maintenance in CO - Basic, per half hour			AMTFS	CTRLX		30.64	30.64								
	Virtual collocation - Maintenance in CO - Overtime, per half hour			AMTFS	SPTOM		35.77	35.77								
	Virtual collocation - Maintenance in CO - Premium per half hour			AMTFS	SPTPM		40.90	40.90								
VIRTUAL COLLOCATION																
	Virtual Collocation - 2-wire Cross Connect, Exchange Port 2-Wire Analog - Res			UEPSR	VE1R2	0.28	30.76	29.40	12.75	11.38			27.37	12.97	17.77	1.44
	Virtual Collocation 2-Wire Cross Connect, Exchange Port 2-Wire Line Side PBX Trunk - Bus			UEPSP	VE1R2	0.28	30.76	29.40	12.75	11.38			27.37	12.97	17.77	1.44
	Virtual Collocation 2-Wire Cross Connect, Exchange Port 2-Wire Voice Grade PBX Trunk - Res			UEPSE	VE1R2	0.28	30.76	29.40	12.75	11.38			27.37	12.97	17.77	1.44
	Virtual Collocation 2-Wire Cross Connect, Exchange Port 2-Wire Analog Bus			UEPSB	VE1R2	0.28	30.76	29.40	12.75	11.38			27.37	12.97	17.77	1.44
	Virtual Collocation 2-Wire Cross Connect, Exchnage Port 2-Wire ISDN			UEPSX	VE1R2	0.28	30.76	29.40	12.75	11.38			27.37	12.97	17.77	1.44
	Virtual Collocation 2-Wire Cross Connect, Exchange Port 2-Wire ISDN			UEPTX	VE1R2	0.28	30.76	29.40	12.75	11.38			27.37	12.97	17.77	1.44
	Virtual Collocation 4-Wire Cross Connect, Exchange Port 4-Wire ISDN DS1			UEPEX	VE1R4	0.56	66.71	50.43					27.37	12.97	17.77	1.44
VIRTUAL COLLOCATION																
	Virtual Collocation-2 Wire Cross Connects (Loop) for Line Splitting			UEPSR, UEPSB	VE1LS	0.0287	24.59	23.59	12.05	10.87			19.99	19.99	19.99	19.99
AIN SELECTIVE CARRIER ROUTING																
	Regional Service Establishment	I		SRC	SRCEC		202,197.82		17,181.39				27.37	27.37	27.37	27.37
	End Office Establishment	I		SRC	SRCEO		339.75	339.75	3.39	3.39			27.37	27.37	27.37	27.37
	Query NRC, per query	I		SRC		0.0031412										

CATEGORY	RATE ELEMENTS	Interim	Zone	BCS	USOC	RATES($) Rec	Nonrecurring First	Nonrecurring Add'l	Nonrecurring Disconnect First	Nonrecurring Disconnect Add'l	Svc Order Submitted Elec per LSR	Svc Order Submitted Manually per LSR	Incremental Charge - Manual Svc Order vs. Electronic-1st	Incremental Charge - Manual Svc Order vs. Electronic-Add'l	Incremental Charge - Manual Svc Order vs. Electronic-Disc 1st	Incremental Charge - Manual Svc Order vs. Electronic-Disc Add'l
											OSS Rates($)					
											SOMEC	SOMAN	SOMAN	SOMAN	SOMAN	SOMAN
AIN - BELLSOUTH AIN SMS ACCESS SERVICE																
	AIN SMS Access Service - Service Establishment, Per State, Initial Setup			A1N	CAMSE		197.49	197.49	114.22	114.22			27.37	27.37	17.75	17.75
	AIN SMS Access Service - Port Connection - Dial/Shared Access			A1N	CAMDP		64.05	64.05	27.04	27.04			27.37	27.37	17.75	17.75
	AIN SMS Access Service - Port Connection - ISDN Access			A1N	CAM1P		64.05	64.05	27.04	27.04			27.37	27.37	17.75	17.75
	AIN SMS Access Service - User Identification Codes - Per User ID Code			A1N	CAMAU		141.84	141.84	70.05	70.05			27.37	27.37	17.75	17.75
	AIN SMS Access Service - Security Card, Per User ID Code, Initial or Replacement			A1N	CAMRC		142.13	142.13	35.26	35.26			27.37	27.37	17.75	17.75
	AIN SMS Access Service - Storage, Per Unit (100 Kilobytes)					0.0026										
	AIN SMS Access Service - Session, Per Minute					0.0892										
	AIN SMS Access Service - Company Performed Session, Per Minute					2.08										
AIN - BELLSOUTH AIN TOOLKIT SERVICE																
	AIN Toolkit Service - Service Establishment Charge, Per State, Initial Setup			CAM	BAPSC		192.69	192.69	114.22	114.22			27.37	27.37	17.75	17.75
	AIN Toolkit Service - Training Session, Per Customer				BAPVX		8,363.00	8,363.00					27.37	27.37	17.75	17.75
	AIN Toolkit Service - Trigger Access Charge, Per Trigger, Per DN, Term. Attempt				BAPTT		49.64	49.64	27.04	27.04			27.37	27.37	17.75	17.75
	AIN Toolkit Service - Trigger Access Charge, Per Trigger, Per DN, Off-Hook Delay				BAPTD		49.64	49.64	27.04	27.04			27.37	27.37	17.75	17.75
	AIN Toolkit Service - Trigger Access Charge, Per Trigger, Per DN, Off-Hook Immediate				BAPTM		49.64	49.64	27.04	27.04			27.37	27.37	17.75	17.75
	AIN Toolkit Service - Trigger Access Charge, Per Trigger, Per DN, 10-Digit PODP				BAPTO		117.98	117.98	37.90	37.90			27.37	27.37	17.75	17.75
	AIN Toolkit Service - Trigger Access Charge, Per Trigger, Per DN, CDP				BAPTC		117.98	117.98	37.90	37.90			27.37	27.37	17.75	17.75
	AIN Toolkit Service - Trigger Access Charge, Per Trigger, Per DN, Feature Code				BAPTF		117.98	117.98	37.90	37.90			27.37	27.37	17.75	17.75
	AIN Toolkit Service - Query Charge, Per Query					0.024										
	AIN Toolkit Service - Type 1 Node Charge, Per AIN Toolkit Subscription, Per Node, Per Query					0.006										
	AIN Toolkit Service - SCP Storage Charge, Per SMS Access Account, Per 100 Kilobytes					1.63										
	AIN Toolkit Service - Monthly report - Per AIN Toolkit Service Subscription			CAM	BAPMS	16.00	44.56	44.56	31.84	31.84			27.37	27.37	17.75	17.75
	AIN Toolkit Service - Special Study - Per AIN Toolkit Service Subscription			CAM	BAPLS	0.10	47.74	47.74	15.90	15.90			27.37	27.37	17.75	17.75
	AIN Toolkit Service - Call Event Report - Per AIN Toolkit Service Subscription			CAM	BAPDS	15.90	44.56	44.56	31.84	31.84			27.37	27.37	17.75	17.75
	AIN Toolkit Service - Call Event Special Study - Per AIN Toolkit Service Subscription			CAM	BAPES	0.003	47.74	47.74					27.37	27.37	17.75	17.75
ENHANCED EXTENDED LINK (EELs)																
	NOTE: New EELs available in GA, TN, KY, LA, MS, & SC and density zone 1 of following MSAs: Orlando, FL; Miami, FL; Ft. Lauderdale, FL;															
	NOTE: Charlotte-Gastonia-Rockhill, NC; Greensboro-Winston Salem-High Point, NC. Use all rates below except Switch As Is Charge.															
	NOTE: In all states, EEL network elements shown below also apply to currently combined facilities which are converted to UNE rates. A Switch As Is Charge applies to currently combined facilities converted to UNEs.(Non-recurring rates do not apply.)															
	NOTE: In GA, TN, KY, LA, MS & SC the EEL network elements apply to ordinarily combined network elements.(No Switch As Is Charge.)															
	2-WIRE VOICE GRADE EXTENDED LOOP WITH DEDICATED DS1 INTEROFFICE TRANSPORT (EEL)															
	First 2-Wire VG Loop(SL2) in a DS1 Interofficed Transport Combination - Zone 1		1	UNCVX	UEAL2	17.95										
	First 2-Wire VG Grade Loop(SL2) in a DS1 Interofficed Transport Combination - Zone 2		2	UNCVX	UEAL2	29.16										
	First 2-Wire VG Grade Loop(SL2) in a DS1 Interofficed Transport Combination - Zone 3		3	UNCVX	UEAL2	52.84										
	Interoffice Transport - Dedicated - DS1 combination - Per Mile per month			UNC1X	1L5XX	0.2067										
	Interoffice Transport - Dedicated - DS1 combination - Facility Termination per month			UNC1X	U1TF1	68.75										

UNBUNDLED NETWORK ELEMENTS - Alabama														Attachment: 2		Exhibit: B	
CATEGORY		RATE ELEMENTS	Interim	Zone	BCS	USOC	RATES($)					Svc Order Submitted Elec per LSR	Svc Order Submitted Manually per LSR	Incremental Charge - Manual Svc Order vs. Electronic-1st	Incremental Charge - Manual Svc Order vs. Electronic-Add'l	Incremental Charge - Manual Svc Order vs. Electronic-Disc 1st	Incremental Charge - Manual Svc Order vs. Electronic-Disc Add'l
							Rec	Nonrecurring		Nonrecurring Disconnect		OSS Rates($)					
								First	Add'l	First	Add'l	SOMEC	SOMAN	SOMAN	SOMAN	SOMAN	SOMAN
		DS1 Channelization System Per Month			UNC1X	MQ1	122.50										
		Voice Grade COCI - DS1 To Ds0 Interface - Per Month			UNCVX	1D1VG	0.64										
		Each Additional 2-Wire VG Loop(SL 2) in the same DS1 Interoffice Transport Combination - Zone 1		1	UNCVX	UEAL2	17.95										
		Each Additional 2-Wire VG Loop(SL2) in the same DS1 Interoffice Transport Combination - Zone 2		2	UNCVX	UEAL2	29.16										
		Each Additional 2-Wire VG Loop(SL2) in the same DS1 Interoffice Transport Combination - Zone 3		3	UNCVX	UEAL2	52.84										
		Voice Grade COCI - DS1 to DS0 Channel System combination - per month			UNCVX	1D1VG	0.64										
		Nonrecurring Currently Combined Network Elements Switch -As-Is Charge			UNC1X	UNCCC		11.18	11.18	13.96	13.96			31.31	31.31	3.93	3.93
	4-WIRE VOICE GRADE EXTENDED LOOP WITH DEDICATED DS1 INTEROFFICE TRANSPORT (EEL)																
		First 4-Wire Analog Voice Grade Loop in a DS1 Interoffice Transport Combination - Zone 1		1	UNCVX	UEAL4	24.01										
		First 4-Wire Analog Voice Grade Loop in a DS1 Interoffice Transport Combination - Zone 2		2	UNCVX	UEAL4	39.00										
		First 4-Wire Analog Voice Grade Loop in a DS1 Interoffice Transport Combination - Zone 3		3	UNCVX	UEAL4	70.67										
		Interoffice Transport - Dedicated - DS1 combination - Per Mile Per Month			UNC1X	1L5XX	0.2067										
		Interoffice Transport - Dedicated - DS1 - Facility Termination Per Month			UNC1X	U1TF1	68.75										
		Channelization - Channel System DS1 to DS0 combination Per Month			UNC1X	MQ1	122.50										
		Voice Grade COCI - DS1 to DS0 Channel System combination - per month			UNCVX	1D1VG	0.64										
		Additional 4-Wire Analog Voice Grade Loop in same DS1 Interoffice Transport Combination - Zone 1		1	UNCVX	UEAL4	24.01										
		Additional 4-Wire Analog Voice Grade Loop in same DS1 Interoffice Transport Combination - Zone 2		2	UNCVX	UEAL4	39.00										
		Additional 4-Wire Analog Voice Grade Loop in same DS1 Interoffice Transport Combination - Zone 3		3	UNCVX	UEAL4	70.67										
		Voice Grade COCI - DS1 to DS0 Channel System combination - per month			UNCVX	1D1VG	0.64										
		Nonrecurring Currently Combined Network Elements Switch -As-Is Charge			UNC1X	UNCCC		11.18	11.18	13.96	13.96			31.31	31.31	3.93	3.93
	4-WIRE 56 KBPS EXTENDED DIGITAL LOOP WITH DEDICATED DS1 INTEROFFICE TRANSPORT (EEL)																
		First 4-Wire 56Kbps Digital Grade Loop in a DS1 Interoffice Transport Combination - Zone 1		1	UNCDX	UDL56	27.33										
		First 4-wire 56Kbps Digital Grade Loop in a DS1 Interoffice Transport Combination - Zone 2		2	UNCDX	UDL56	44.40										
		First 4-Wire 56Kbps Digital Grade Loop in a DS1 Interoffice Transport Combination - Zone 3		3	UNCDX	UDL56	80.45										
		Interoffice Transport - Dedicated - DS1 combination - Per Mile Per Month			UNC1X	1L5XX	0.2067										
		Interoffice Transport - Dedicated - DS1 - combination Facility Termination Per Month			UNC1X	U1TF1	68.75										
		Channelization - Channel System DS1 to DS0 combination Per Month			UNC1X	MQ1	122.50										
		OCU-DP COCI (data) - DS1 to DS0 Channel System - per month (2.4-64kbs)			UNCDX	1D1DD	1.36										
		Additional 4-Wire 56Kbps Digital Grade Loopin same DS1 Interoffice Transport Combination - Zone 1		1	UNCDX	UDL56	27.33										
		Additional 4-Wire 56Kbps Digital Grade Loopin same DS1 Interoffice Transport Combination - Zone 2		2	UNCDX	UDL56	44.40										
		Additional 4-Wire 56Kbps Digital Grade Loopin same DS1 Interoffice Transport Combination - Zone 3		3	UNCDX	UDL56	80.45										

CATEGORY		RATE ELEMENTS	Interim	Zone	BCS	USOC	RATES($)					Svc Order Submitted Elec per LSR	Svc Order Submitted Manually per LSR	Incremental Charge - Manual Svc Order vs. Electronic-1st	Incremental Charge - Manual Svc Order vs. Electronic-Add'l	Incremental Charge - Manual Svc Order vs. Electronic-Disc 1st	Incremental Charge - Manual Svc Order vs. Electronic-Disc Add'l
							Rec	Nonrecurring		Nonrecurring Disconnect		OSS Rates($)					
								First	Add'l	First	Add'l	SOMEC	SOMAN	SOMAN	SOMAN	SOMAN	SOMAN
		OCU-DP COCI (data) - DS1 to DS0 Channel System - combination per month (2.4-64kbs)			UNCDX	1D1DD	1.36										
		Nonrecurring Currently Combined Network Elements Switch -As-Is Charge			UNC1X	UNCCC		11.18	11.18	13.96	13.96			31.31	31.31	3.93	3.93
	4-WIRE 64 KBPS EXTENDED DIGITAL LOOP WITH DEDICATED DS1 INTEROFFICE TRANSPORT (EEL)																
		First 4-Wire 64Kbps Digital Grade Loop in a DS1 Interoffice Transport Combination - Zone 1		1	UNCDX	UDL64	27.33										
		First 4-Wire 64Kbps Digital Grade Loop in a DS1 Interoffice Transport Combination - Zone 2		2	UNCDX	UDL64	44.40										
		First 4-Wire 64Kbps Digital Grade Loop in a DS1 Interoffice Transport Combination - Zone 3		3	UNCDX	UDL64	80.45										
		Interoffice Transport - Dedicated - DS1 combination - Per Mile Per Month			UNC1X	1L5XX	0.2067										
		Interoffice Transport - Dedicated - DS1 combination - Facility Termination Per Month			UNC1X	U1TF1	68.75										
		Channelization - Channel System DS1 to DS0 combination Per Month			UNC1X	MQ1	122.50										
		OCU-DP COCI (data) - DS1 to DS0 Channel System combination - per month (2.4-64kbs)			UNCDX	1D1DD	1.36										
		Additional 4-Wire 64Kbps Digital Grade Loopin same DS1 Interoffice Transport Combination - Zone 1		1	UNCDX	UDL64	27.33										
		Additional 4-Wire 64Kbps Digital Grade Loopin same DS1 Interoffice Transport Combination - Zone 2		2	UNCDX	UDL64	44.40										
		Additional 4-Wire 64Kbps Digital Grade Loopin same DS1 Interoffice Transport Combination - Zone 3		3	UNCDX	UDL64	80.45										
		OCU-DP COCI (data) - DS1 to DS0 Channel System combination - per month (2.4-64kbs)			UNCDX	1D1DD	1.36										
		Nonrecurring Currently Combined Network Elements Switch -As-Is Charge			UNC1X	UNCCC		11.18	11.18	13.96	13.96			31.31	31.31	3.93	3.93
	4-WIRE DS1 DIGITAL EXTENDED LOOP WITH DEDICATED DS1 INTEROFFICE TRANSPORT (EEL)																
		4-Wire DS1 Digital Loop in Combination with DS1 Interoffice Transport - Zone 1		1	UNC1X	USLXX	51.74										
		4-Wire DS1 Digital Loop in Combination with DS1 Interoffice Transport - Zone 2		2	UNC1X	USLXX	84.05										
		4-Wire DS1 Digital Loop in Combination with DS1 Interoffice Transport - Zone 3		3	UNC1X	USLXX	152.29										
		Interoffice Transport - Dedicated - DS1 combination - Per Mile Per Month			UNC1X	1L5XX	0.2067										
		Interoffice Transport - Dedicated - DS1 combination - Facility Termination Per Month			UNC1X	U1TF1	68.75										
		Nonrecurring Currently Combined Network Elements Switch -As-Is Charge			UNC1X	UNCCC		11.18	11.18	13.96	13.96			31.31	31.31	3.93	3.93
	4-WIRE DS1 DIGITAL EXTENDED LOOP WITH DEDICATED DS3 INTEROFFICE TRANSPORT (EEL)																
		First DS1Loop in DS3 Interoffice Transport Combination - Zone 1		1	UNC1X	USLXX	51.74										
		First DS1Loop in DS3 Interoffice Transport Combination - Zone 2		2	UNC1X	USLXX	84.05										
		First DS1Loop in DS3 Interoffice Transport Combination - Zone 3		3	UNC1X	USLXX	152.29										
		Interoffice Transport - Dedicated - DS3 combination - Per Mile Per Month			UNC3X	1L5XX	4.67										
		Interoffice Transport - Dedicated - DS3 - Facility Termination per month			UNC3X	U1TF3	804.02										
		DS3 to DS1 Channel System combination per month			UNC3X	MQ3	201.37										
		DS3 Interface Unit (DS1 COCI) combination per month			UNC1X	UC1D1	15.39										
		Additional DS1Loop in DS3 Interoffice Transport Combination - Zone 1		1	UNC1X	USLXX	51.74										
		Additional DS1Loop in DS3 Interoffice Transport Combination - Zone 2		2	UNC1X	USLXX	84.05										

CATEGORY	RATE ELEMENTS	Interim	Zone	BCS	USOC	RATES($)					Svc Order Submitted Elec per LSR	Svc Order Submitted Manually per LSR	Incremental Charge - Manual Svc Order vs. Electronic-1st	Incremental Charge - Manual Svc Order vs. Electronic-Add'l	Incremental Charge - Manual Svc Order vs. Electronic-Disc 1st	Incremental Charge - Manual Svc Order vs. Electronic-Disc Add'l
						Rec	Nonrecurring		Nonrecurring Disconnect		OSS Rates($)					
							First	Add'l	First	Add'l	SOMEC	SOMAN	SOMAN	SOMAN	SOMAN	SOMAN
	Additional DS1Loop in DS3 Interoffice Transport Combination - Zone 3		3	UNC1X	USLXX	152.29										
	DS3 Interface Unit (DS1 COCI) combination per month			UNC1X	UC1D1	15.39										
	Nonrecurring Currently Combined Network Elements Switch -As-Is Charge			UNC3X	UNCCC		11.18	11.18	13.96	13.96			31.31	31.31	3.93	3.93
	2-WIRE VOICE GRADE EXTENDED LOOP/ 2 WIRE VOICE GRADE INTEROFFICE TRANSPORT (EEL)															
	2-WireVG Loop used with 2-wire VG Interoffice Transport Combination - Zone 1		1	UNCVX	UEAL2	17.95										
	2-WireVG Loop used with 2-wire VG Interoffice Transport Combination - Zone 2		2	UNCVX	UEAL2	29.16										
	2-WireVG Loop used with 2-wire VG Interoffice Transport Combination - Zone 3		3	UNCVX	UEAL2	52.84										
	Interoffice Transport - Dedicated - 2-wire VG combination - Per Mile Per Month			UNCVX	1L5XX	0.0101										
	Interoffice Transport - Dedicated - 2- Wire Voice Grade combination - Facility Termination per month			UNCVX	U1TV2	24.15										
	Nonrecurring Currently Combined Network Elements Switch -As-Is Charge			UNCVX	UNCCC		11.18	11.18	13.96	13.96			31.31	31.31	3.93	3.93
	4-WIRE VOICE GRADE EXTENDED LOOP/ 4 WIRE VOICE GRADE INTEROFFICE TRANSPORT (EEL)															
	4-WireVG Loop used with 4-wire VG Interoffice Transport Combination - Zone 1		1	UNCVX	UEAL4	24.01										
	4-WireVG Loop used with 4-wire VG Interoffice Transport Combination - Zone 2		2	UNCVX	UEAL4	39.00										
	4-WireVG Loop used with 4-wire VG Interoffice Transport Combination - Zone 3		3	UNCVX	UEAL4	70.67										
	Interoffice Transport - Dedicated - 4-wire VG combination - Per Mile Per Month			UNCVX	1L5XX	0.0101										
	Interoffice Transport - Dedicated - 4- Wire Voice Grade combination - Facility Termination per month			UNCVX	U1TV4	21.41										
	Nonrecurring Currently Combined Network Elements Switch -As-Is Charge			UNCVX	UNCCC		11.18	11.18	13.96	13.96			31.31	31.31	3.93	3.93
	DS3 DIGITAL EXTENDED LOOP WITH DEDICATED DS3 INTEROFFICE TRANSPORT (EEL)															
	High Capacity Unbundled Local Loop - DS3 combination - Per Mile per month			UNC3X	1L5ND	10.16										
	High Capacity Unbundled Local Loop - DS3 combination - Facility Termination per month			UNC3X	UE3PX	374.52										
	Interoffice Transport - Dedicated - DS3 - Per Mile per month			UNC3X	1L5XX	4.67										
	Interoffice Transport - Dedicated - DS3 combination - Facility Termination per per month			UNC3X	U1TF3	804.02										
	Nonrecurring Currently Combined Network Elements Switch -As-Is Charge			UNC3X	UNCCC		11.18	11.18	13.96	13.96			31.31	31.31	3.93	3.93
	STS1 DIGITAL EXTENDED LOOP WITH DEDICATED STS1 INTEROFFICE TRANSPORT (EEL)															
	High Capacity Unbundled Local Loop - STS1 combination - Per Mile per month			UNCSX	1L5ND	10.16										
	High Capacity Unbundled Local Loop - STS1 combination - Facility Termination per month			UNCSX	UDLS1	387.67										
	Interoffice Transport - Dedicated - STS1 combination - Per Mile per month			UNCSX	1L5XX	4.67										
	Interoffice Transport - Dedicated - STS1 combination - Facility Termination per month			UNCSX	U1TFS	801.57										
	Nonrecurring Currently Combined Network Elements Switch -As-Is Charge			UNCSX	UNCCC		11.18	11.18	13.96	13.96			31.31	31.31	3.93	3.93
	2-WIRE ISDN EXTENDED LOOP WITH DS1 INTEROFFICE TRANSPORT (EEL)															
	First 2-Wire ISDN Loop in a DS1 Interoffice Combination Transport - Zone 1		1	UNCNX	U1L2X	23.23										
	First 2-Wire ISDN Loop in a DS1 Interoffice Combination Transport - Zone 2		2	UNCNX	U1L2X	37.74										
	First 2-Wire ISDN Loop in a DS1 Interoffice Combination Transport - Zone 3		3	UNCNX	U1L2X	68.38										

CATEGORY		RATE ELEMENTS	Interim	Zone	BCS	USOC	RATES($)					Svc Order Submitted Elec per LSR	Svc Order Submitted Manually per LSR	Incremental Charge - Manual Svc Order vs. Electronic-1st	Incremental Charge - Manual Svc Order vs. Electronic-Add'l	Incremental Charge - Manual Svc Order vs. Electronic-Disc 1st	Incremental Charge - Manual Svc Order vs. Electronic-Disc Add'l
							Rec	Nonrecurring		Nonrecurring Disconnect		OSS Rates($)					
								First	Add'l	First	Add'l	SOMEC	SOMAN	SOMAN	SOMAN	SOMAN	SOMAN
		Interoffice Transport - Dedicated - DS1 combination - Per Mile			UNC1X	1L5XX	0.2067										
		Interoffice Transport - Dedicated - DS1 combintion - Facility Termination per month			UNC1X	U1TF1	68.75										
		Channelization - Channel System DS1 to DS0 combination - per month			UNC1X	MQ1	122.50										
		2-wire ISDN COCI (BRITE) - DS1 to DS0 Channel System combination - per month			UNCNX	UC1CA	2.92										
		Additional 2-wire ISDN Loop in same DS1Interoffice Transport Combination - Zone 1		1	UNCNX	U1L2X	23.23										
		Additional 2-wire ISDN Loop in same DS1Interoffice Transport Combination - Zone 2		2	UNCNX	U1L2X	37.74										
		Additional 2-wire ISDN Loop in same DS1Interoffice Transport Combination - Zone 3		3	UNCNX	U1L2X	68.38										
		2-wire ISDN COCI (BRITE) - DS1 to DS0 Channel System combintaion- per month			UNCNX	UC1CA	2.92										
		Nonrecurring Currently Combined Network Elements Switch -As-Is Charge			UNC1X	UNCCC		11.18	11.18	13.96	13.96			31.31	31.31	3.93	3.93
	4-WIRE DS1 DIGITAL EXTENDED LOOP WITH DEDICATED STS-1 INTEROFFICE TRANSPORT (EEL)																
		First DS1 Loop in STS1 Interoffice Transport Combination - Zone 1		1	UNC1X	USLXX	51.74										
		First DS1 Loop in STS1 Interoffice Transport Combination - Zone 2		2	UNC1X	USLXX	84.05										
		First DS1 Loop in STS1 Interoffice Transport Combination - Zone 3		3	UNC1X	USLXX	152.29										
		Interoffice Transport - Dedicated - STS1 combination - Per Mile Per Month			UNCSX	1L5XX	4.67										
		Interoffice Transport - Dedicated - STS1 combination - Facility Termination			UNCSX	U1TFS	801.57										
		STS1 to DS1 Channel System conbination per month			UNCSX	MQ3	201.37										
		DS3 Interface Unit (DS1 COCI) combination per month			UNC1X	UC1D1	15.39										
		Additional DS1Loop in STS1 Interoffice Transport Combination - Zone 1		1	UNC1X	USLXX	51.74										
		Additional DS1Loop in STS1 Interoffice Transport Combination - Zone 2		2	UNC1X	USLXX	84.05										
		Additional DS1Loop in STS1 Interoffice Transport Combination - Zone 3		3	UNC1X	USLXX	152.29										
		DS3 Interface Unit (DS1 COCI) combination per month			UNC1X	UC1D1	15.39										
		Nonrecurring Currently Combined Network Elements Switch -As-Is Charge			UNCSX	UNCCC		11.18	11.18	13.96	13.96			31.31	31.31	3.93	3.93
	4-WIRE 56 KBPS DIGITAL EXTENDED LOOP WITH 56 KBPS INTEROFFICE TRANSPORT (EEL)																
		4-wire 56 kbps Loop/4-wire 56 kbps Interoffice Transport Combination - Zone 1		1	UNCDX	UDL56	27.33										
		4-wire 56 kbps Loop/4-wire 56 kbps Interoffice Transport Combination - Zone 2		2	UNCDX	UDL56	44.40										
		4-wire 56 kbps Loop/4-wire 56 kbps Interoffice Transport Combination - Zone 3		3	UNCDX	UDL56	80.45										
		Interoffice Transport - Dedicated - 4-wire 56 kbps combination - Per Mile			UNCDX	1L5XX	0.0101										
		Interoffice Transport - Dedicated - 4-wire 56 kbps combination - Facility Termination			UNCDX	U1TD5	17.28										
		Nonrecurring Currently Combined Network Elements Switch -As-Is Charge			UNCDX	UNCCC		11.18	11.18	13.96	13.96			31.31	31.31	3.93	3.93
	4-WIRE 64 KBPS DIGITAL EXTENDED LOOP WITH 64 KBPS INTEROFFICE TRANSPORT (EEL)																
		4-wire 64 kbps Loop/4-wire 64 kbps Interoffice Transport Combination - Zone 1		1	UNCDX	UDL64	27.33										
		4-wire 64 kbps Loop/4-wire 64 kbps Interoffice Transport Combination - Zone 2		2	UNCDX	UDL64	44.40										
		4-wire 64 kbps Loop/4-wire 64 kbps Interoffice Transport Combination - Zone 3		3	UNCDX	UDL64	80.45										

CATEGORY	RATE ELEMENTS	Interim	Zone	BCS	USOC	RATES($) Rec	Nonrecurring First	Nonrecurring Add'l	Nonrecurring Disconnect First	Nonrecurring Disconnect Add'l	Svc Order Submitted Elec per LSR	Svc Order Submitted Manually per LSR	Incremental Charge - Manual Svc Order vs. Electronic-1st	Incremental Charge - Manual Svc Order vs. Electronic-Add'l	Incremental Charge - Manual Svc Order vs. Electronic-Disc 1st	Incremental Charge - Manual Svc Order vs. Electronic-Disc Add'l
											OSS Rates($)					
											SOMEC	SOMAN	SOMAN	SOMAN	SOMAN	SOMAN
	Interoffice Transport - Dedicated - 4-wire 64 kbps combination - Per Mile			UNCDX	1L5XX	0.0101										
	Interoffice Transport - Dedicated - 4-wire 64 kbps combination - Facility Termination			UNCDX	U1TD6	17.28										
	Nonrecurring Currently Combined Network Elements Switch -As-Is Charge			UNCDX	UNCCC		11.18	11.18	13.96	13.96			31.31	31.31	3.93	3.93
ADDITIONAL NETWORK ELEMENTS																
When used as a part of a currently combined facility, the non-recurrng charges do not apply, but a Switch As Is charge does apply.																
Node (SynchroNet)																
Nonrecurring Currently Combined Network Elements "Switch As Is" Charge (One applies to each combination)																
	Nonrecurring Currently Combined Network Elements Switch -As-Is Charge - 2 wire/4-Wire VG			UNCVX	UNCCC		11.18	11.18	13.96	13.96			31.31	31.31	3.93	3.93
	Nonrecurring Currently Combined Network Elements Switch -As-Is Charge - 56/64 kbps			UNCDX	UNCCC		11.18	11.18	13.96	13.96			31.31	31.31	3.93	3.93
	Nonrecurring Currently Combined Network Elements Switch -As-Is Charge - DS1			UNC1X	UNCCC		11.18	11.18	13.96	13.96			31.31	31.31	3.93	3.93
	Nonrecurring Currently Combined Network Elements Switch -As-Is Charge - DS3			UNC3X	UNCCC		11.18	11.18	13.96	13.96			31.31	31.31	3.93	3.93
	Nonrecurring Currently Combined Network Elements Switch -As-Is Charge - STS1			UNCSX	UNCCC		11.18	11.18	13.96	13.96			31.31	31.31	3.93	3.93
NOTE: Local Channel - Dedicated Transport - minimum billing period - Below DS3=one month, DS3 and above=four months																
UNBUNDLED LOCAL EXCHANGE SWITCHING(PORTS)																
Exchange Ports																
NOTE: Although the Port Rate includes all available features in GA, KY, LA & TN, the desired features will need to be ordered using retail USOCs																
2-WIRE VOICE GRADE LINE PORT RATES (RES)																
	Exchange Ports - 2-Wire Analog Line Port- Res.			UEPSR	UEPRL	2.07	21.93	21.93	6.21	6.21			27.37	12.97	17.77	1.44
	Exchange Ports - 2-Wire Analog Line Port with Caller ID - Res.			UEPSR	UEPRC	2.07	21.93	21.93	6.21	6.21			27.37	12.97	17.77	1.44
	Exchange Ports - 2-Wire Analog Line Port outgoing only - Res.			UEPSR	UEPRO	2.07	21.93	21.93	6.21	6.21			27.37	12.97	17.77	1.44
	Exchange Ports - 2-Wire VG unbundled AL extended local dialing parity Port with Caller ID - Res.			UEPSR	UEPAR	2.07	21.93	21.93	6.21	6.21			27.37	12.97	17.77	1.44
	Exchange Ports - 2-Wire VG unbundled res, low usage line port with Caller ID (LUM)			UEPSR	UEPAP	2.07	21.93	21.93	6.21	6.21			27.37	12.97	17.77	1.44
	Subsequent Activity			UEPSR	USASC	0.00	0.00	0.00					27.37	12.97	17.77	1.44
FEATURES																
	All Available Vertical Features			UEPSR	UEPVF	5.55	0.00	0.00					27.37	12.97	17.77	1.44
2-WIRE VOICE GRADE LINE PORT RATES (BUS)																
	Exchange Ports - 2-Wire Analog Line Port without Caller ID - Bus			UEPSB	UEPBL	2.07	21.93	21.93	6.21	6.21			27.37	12.97	17.77	1.44
	Exchange Ports - 2-Wire VG unbundled Line Port with unbundled port with Caller+E484 ID - Bus.			UEPSB	UEPBC	2.07	21.93	21.93	6.21	6.21			27.37	12.97	17.77	1.44
	Exchange Ports - 2-Wire Analog Line Port outgoing only - Bus.			UEPSB	UEPBO	2.07	21.93	21.93	6.21	6.21			27.37	12.97	17.77	1.44
	Exchange Ports - 2-Wire VG unbundled AL extended local dialing parity Port with Caller ID - Bus.			UEPSB	UEPAW	2.07	21.93	21.93	6.21	6.21			27.37	12.97	17.77	1.44
	Exhange Ports - 2-Wire VG unbundled incoming only port with Caller ID - Bus			UEPSB	UEPB1	2.07	21.93	21.93	6.21	6.21			27.37	12.97	17.77	1.44
	Subsequent Activity			UEPSB	USASC	0.00	0.00	0.00					27.37	12.97	17.77	1.44
FEATURES																
	All Available Vertical Features			UEPSB	UEPVF	5.55	0.00	0.00					27.37	12.97	17.77	1.44
EXCHANGE PORT RATES (DID & PBX)																
	2-Wire VG Unbundled 2-Way PBX Trunk - Res			UEPSE	UEPRD	2.07	21.93	21.93	6.21	6.21			27.37	12.97	17.77	1.44
	2-Wire VG Line Side Unbundled 2-Way PBX Trunk - Bus			UEPSP	UEPPC	2.07	21.93	21.93	6.21	6.21			27.37	12.97	17.77	1.44
	2-Wire VG Line Side Unbundled Outward PBX Trunk - Bus			UEPSP	UEPPO	2.07	21.93	21.93	6.21	6.21			27.37	12.97	17.77	1.44
	2-Wire VG Line Side Unbundled Incoming PBX Trunk - Bus			UEPSP	UEPP1	2.07	21.93	21.93	6.21	6.21			27.37	12.97	17.77	1.44
	2-Wire Analog Long Distance Terminal PBX Trunk - Bus			UEPSP	UEPLD	2.07	21.93	21.93	6.21	6.21			27.37	12.97	17.77	1.44
	2-Wire Voice Unbundled 2-Way PBX Alabama Calling Port			UEPSP	UEPA2	2.07	21.93	21.93	6.21	6.21			27.37	12.97	17.77	1.44
	2-Wire Voice Unbundled PBX LD Terminal Ports			UEPSP	UEPLD	2.07	21.93	21.93	6.21	6.21			27.37	12.97	17.77	1.44

CATEGORY	RATE ELEMENTS	Interim	Zone	BCS	USOC	RATES($) Rec	Nonrecurring First	Nonrecurring Add'l	Nonrecurring Disconnect First	Nonrecurring Disconnect Add'l	Svc Order Submitted Elec per LSR	Svc Order Submitted Manually per LSR	Incremental Charge - Manual Svc Order vs. Electronic-1st	Incremental Charge - Manual Svc Order vs. Electronic-Add'l	Incremental Charge - Manual Svc Order vs. Electronic-Disc 1st	Incremental Charge - Manual Svc Order vs. Electronic-Disc Add'l
											OSS Rates($)					
											SOMEC	SOMAN	SOMAN	SOMAN	SOMAN	SOMAN
	2-Wire Vice Unbundled 2-Way PBX Usage Port			UEPSP	UEPXA	2.07	21.93	21.93	6.21	6.21			27.37	12.97	17.77	1.44
	2-Wire Voice Unbundled PBX Toll Terminal Hotel Ports			UEPSP	UEPXB	2.07	21.93	21.93	6.21	6.21			27.37	12.97	17.77	1.44
	2-Wire Voice Unbundled PBX LD DDD Terminals Port			UEPSP	UEPXC	2.07	21.93	21.93	6.21	6.21			27.37	12.97	17.77	1.44
	2-Wire Voice Unbundled PBX LD Terminal Switchboard Port			UEPSP	UEPXD	2.07	21.93	21.93	6.21	6.21			27.37	12.97	17.77	1.44
	2-Wire Voice Unbundled PBX LD Terminal Switchboard IDD Capable Port			UEPSP	UEPXE	2.07	21.93	21.93	6.21	6.21			27.37	12.97	17.77	1.44
	2-Wire Voice Unbundled 2-Way PBX Hotel/Hospital Economy Administrative Calling Port			UEPSP	UEPXL	2.07	21.93	21.93	6.21	6.21			27.37	12.97	17.77	1.44
	2-Wire Voice Unbundled 2-Way PBX Hotel/Hospital Economy Room Calling Port			UEPSP	UEPXM	2.07	21.93	21.93	6.21	6.21			27.37	12.97	17.77	1.44
	2-Wire Voice Unbundled 1-Way Outgoing PBX Hotel/Hospital Discount Room Calling Port			UEPSP	UEPXO	2.07	21.93	21.93	6.21	6.21			27.37	12.97	17.77	1.44
	2-Wire Voice Unbundled 1-Way Outgoing PBX Measured Port			UEPSP	UEPXS	2.07	21.93	21.93	6.21	6.21			27.37	12.97	17.77	1.44
	Subsequent Activity			UEPSP	USASC	0.00	0.00	0.00					27.37	12.97	17.77	1.44
FEATURES																
	All Available Vertical Features			UEPSP UEPSE	UEPVF	5.55	0.00	0.00					27.37	12.97	17.77	1.44
EXCHANGE PORT RATES (COIN)																
	Exchange Ports - Coin Port					2.34	21.93	21.93	5.21	5.21			25.93	12.97	16.33	0.48
NOTE: Transmission/usage charges associated with POTS circuit switched usage will also apply to circuit switched voice and/or circuit switched data transmission by B-Channels associated with 2-wire ISDN ports.																
NOTE: Access to B Channel or D Channel Packet capabilities will be available only through BFR/New Business Request Process. Rates for the packet capabilities will be determined via the Bona Fide Request/New Business Request Process.																
UNBUNDLED LOCAL EXCHANGE SWITCHING(PORTS)																
EXCHANGE PORT RATES (DID & PBX)																
	Exchange Ports - 2-Wire DID Port			UEPEX	UEPP2	9.20	238.61	37.48	119.79				19.99	19.99	19.99	19.99
	Exchange Ports - DDITS Port - 4-Wire DS1 Port with DID capability			UEPDD	UEPDD	68.67	404.04	191.38	145.18	4.92			19.99	19.99	19.99	19.99
	Exchange Ports - 2-Wire ISDN Port (See Notes below.)			UEPTX UEPSX	U1PMA	11.19	145.54	105.97	95.57	21.47			19.99	19.99	19.99	19.99
	All Features Offered			UEPTX UEPSX	UEPVF	5.55	0.00	0.00								
NOTE: Transmission/usage charges associated with POTS circuit switched usage will also apply to circuit switched voice and/or circuit switched data transmission by B-Channels associated with 2-wire ISDN ports.																
NOTE: Access to B Channel or D Channel Packet capabilities will be available only through BFR/New Business Request Process. Rates for the packet capabilities will be determined via the Bona Fide Request/New Business Request Process.																
	Exchange Ports - 2-Wire ISDN Port -- Channel Profiles			UEPTX UEPSX	U1UMA	0.00	0.00	0.00								
	Exchange Ports - 4-Wire ISDN DS1 Port			UEPEX	UEPEX	96.37	407.62	203.11	158.35	40.11			54.75	54.75	11.53	11.53
UNBUNDLED LOCAL SWITCHING, PORT USAGE																
End Office Switching (Port Usage)																
	End Office Switching Function, Per MOU					0.0018										
	End Office Trunk Port - Shared, Per MOU					0.0002										
Tandem Switching (Port Usage) (Local or Access Tandem)																
	Tandem Switching Function Per MOU					0.00063										
	Tandem Trunk Port - Shared, Per MOU					0.00033										
Common Transport																
	Common Transport - Per Mile, Per MOU					0.00001										
	Common Transport - Facilities Termination Per MOU					0.00045										
UNBUNDLED PORT/LOOP COMBINATIONS - COST BASED RATES																
Cost Based Rates are applied where BellSouth is required by FCC and/or State Commission rule to provide Unbundled Local Switching or Switch Ports.																
Features shall apply to the Unbundled Port/Loop Combination - Cost Based Rate section in the same manner as they are applied to the Stand-Alone Unbundled Port section of this Rate Exhibit.																
End Office and Tandem Switching Usage and Common Transport Usage rates in the Port section of this rate exhibit shall apply to all combinations of loop/port network elements except for UNE Coin Port/Loop Combinations.																
For Georgia, Kentucky, Louisiana, Mississippi, South Carolina and Tennessee, the recurring UNE Port and Loop charges listed apply to Currently Combined and Not Currently Combined Combos. The first and additional Port nonrecurring charges apply to Not Currently Combined Combos for all states. In GA, KY, LA, MS, SC and TN these nonrecurring charges are commission ordered cost based rates and in AL, FL and NC these nonrecurring charges are Market Rates and are also listed in the Market Rate section. For Currently Combined Combos in all other states, the nonrecurring charges shall be those identified in the Nonrecurring - Currently Combined sections.																
2-WIRE VOICE GRADE LOOP WITH 2-WIRE LINE PORT (RES)																
UNE Port/Loop Combination Rates																
	2-Wire VG Loop/Port Combo - Zone 1		1			16.55										
	2-Wire VG Loop/Port Combo - Zone 2		2			25.51										
	2-Wire VG Loop/Port Combo - Zone 3		3			44.44										
UNE Loop Rates																
	2-Wire Voice Grade Loop (SL1) - Zone 1		1	UEPRX	UEPLX	14.35										
	2-Wire Voice Grade Loop (SL1) - Zone 2		2	UEPRX	UEPLX	23.31										
	2-Wire Voice Grade Loop (SL1) - Zone 3		3	UEPRX	UEPLX	42.24										
2-Wire Voice Grade Line Port Rates (Res)																
	2-Wire voice unbundled port - residence			UEPRX	UEPRL	2.20	90.00	90.00					40.71	9.58		

CATEGORY	RATE ELEMENTS	Interim	Zone	BCS	USOC	RATES($) Rec	Nonrecurring First	Nonrecurring Add'l	Nonrecurring Disconnect First	Nonrecurring Disconnect Add'l	Svc Order Submitted Elec per LSR	Svc Order Submitted Manually per LSR	Incremental Charge - Manual Svc Order vs. Electronic-1st	Incremental Charge - Manual Svc Order vs. Electronic-Add'l	Incremental Charge - Manual Svc Order vs. Electronic-Disc 1st	Incremental Charge - Manual Svc Order vs. Electronic-Disc Add'l
											OSS Rates($)					
											SOMEC	SOMAN	SOMAN	SOMAN	SOMAN	SOMAN
	2-Wire voice unbundled port with Caller ID - res			UEPRX	UEPRC	2.20	90.00	90.00					40.71	9.58		
	2-Wire voice unbundled port outgoing only - res			UEPRX	UEPRO	2.20	90.00	90.00					40.71	9.58		
	2-Wire voice Grade unbundled Alabama extended local dialing parity port with Caller ID - res			UEPRX	UEPAR	2.20	90.00	90.00					40.71	9.58		
	2-Wire voice unbundles res, low usage line port with Caller ID (LUM)			UEPRX	UEPAP	2.20	90.00	90.00					40.71	9.58		
FEATURES																
	All Features Offered			UEPRX	UEPVF	5.55	0.00	0.00					40.71	9.58		
LOCAL NUMBER PORTABILITY																
	Local Number Portability (1 per port)			UEPRX	LNPCX	0.35										
NONRECURRING CHARGES (NRCs) - CURRENTLY COMBINED																
	2-Wire Voice Grade Loop / Line Port Combination - Conversion - Switch-as-is			UEPRX	USAC2		2.80	0.41					40.71	9.58		
	2-Wire Voice Grade Loop / Line Port Combination - Conversion - Switch with change			UEPRX	USACC		2.80	0.41					40.71	9.58		
	2-Wire Voice Grade Loop / Line Port Combination - Conversion - Subsequent Database Update						1.44						8.25			
ADDITIONAL NRCs																
	2-Wire Voice Grade Loop/Line Port Combination - Subsequent Activity			UEPRX	USAS2	0.00	0.00	0.00					40.71	9.58		
2-WIRE VOICE GRADE LOOP WITH 2-WIRE LINE PORT (BUS)																
UNE Port/Loop Combination Rates																
	2-Wire VG Loop/Port Combo - Zone 1		1			16.55										
	2-Wire VG Loop/Port Combo - Zone 2		2			25.51										
	2-Wire VG Loop/Port Combo - Zone 3		3			44.44										
UNE Loop Rates																
	2-Wire Voice Grade Loop (SL1) - Zone 1		1	UEPBX	UEPLX	14.35										
	2-Wire Voice Grade Loop (SL1) - Zone 2		2	UEPBX	UEPLX	23.31										
	2-Wire Voice Grade Loop (SL1) - Zone 3		3	UEPBX	UEPLX	42.24										
2-Wire Voice Grade Line Port (Bus)																
	2-Wire voice unbundled port without Caller ID - bus			UEPBX	UEPBL	2.20	90.00	90.00					40.71	9.58		
	2-Wire voice unbundled port with Caller + E484 ID - bus			UEPBX	UEPBC	2.20	90.00	90.00					40.71	9.58		
	2-Wire voice unbundled port outgoing only - bus			UEPBX	UEPBO	2.20	90.00	90.00					40.71	9.58		
	2-Wire voice Grade unbundled Alabama extended local dialing parity port with Caller ID - bus			UEPBX	UEPAW	2.20	90.00	90.00					40.71	9.58		
	2-Wire voice unbundled incoming only port with Caller ID - Bus			UEPBX	UPEB1	2.20	90.00	90.00					40.71	9.58		
LOCAL NUMBER PORTABILITY																
	Local Number Portability (1 per port)			UEPBX	LNPCX	0.35										
FEATURES																
	All Features Offered			UEPBX	UEPVF	5.55	0.00	0.00					40.71	9.58		
NONRECURRING CHARGES (NRCs) - CURRENTLY COMBINED																
	2-Wire Voice Grade Loop / Line Port Combination - Conversion - Switch-as-is			UEPBX	USAC2		2.80	0.41					40.71	9.58		
	2-Wire Voice Grade Loop / Line Port Combination - Conversion - Switch with change			UEPBX	USACC		2.80	0.41					40.71	9.58		
	2-Wire Voice Grade Loop / Line Port Combination - Conversion - Subsequent Database Update						1.44						8.25			
ADDITIONAL NRCs																
	2-Wire Voice Grade Loop/Line Port Combination - Subsequent Activity			UEPBX	USAS2		0.00	0.00					40.71	9.58		
2-WIRE VOICE GRADE LOOP WITH 2-WIRE LINE PORT (RES - PBX)																
UNE Port/Loop Combination Rates																
	2-Wire VG Loop/Port Combo - Zone 1		1			16.55										
	2-Wire VG Loop/Port Combo - Zone 2		2			25.51										
	2-Wire VG Loop/Port Combo - Zone 3		3			44.44										
UNE Loop Rates																
	2-Wire Voice Grade Loop (SL 1) - Zone 1		1	UEPRG	UEPLX	14.35										
	2-Wire Voice Grade Loop (SL 1) - Zone 2		2	UEPRG	UEPLX	23.31										
	2-Wire Voice Grade Loop (SL 1) - Zone 3		3	UEPRG	UEPLX	42.24										

UNBUNDLED NETWORK ELEMENTS - Alabama													Attachment: 2		Exhibit: B	
CATEGORY	RATE ELEMENTS	Interim	Zone	BCS	USOC	RATES($)					Svc Order Submitted Elec per LSR	Svc Order Submitted Manually per LSR	Incremental Charge - Manual Svc Order vs. Electronic-1st	Incremental Charge - Manual Svc Order vs. Electronic-Add'l	Incremental Charge - Manual Svc Order vs. Electronic-Disc 1st	Incremental Charge - Manual Svc Order vs. Electronic-Disc Add'l
						Rec	Nonrecurring		Nonrecurring Disconnect		OSS Rates($)					
							First	Add'l	First	Add'l	SOMEC	SOMAN	SOMAN	SOMAN	SOMAN	SOMAN
2-Wire Voice Grade Line Port Rates (RES - PBX)																
	2-Wire VG Unbundled Combination 2-Way PBX Trunk Port - Res			UEPRG	UEPRD	2.20	90.00	90.00					40.71	9.58		
LOCAL NUMBER PORTABILITY																
	Local Number Portability (1 per port)			UEPRG	LNPCP	3.15	0.00	0.00					40.71	9.58		
FEATURES																
	All Features Offered			UEPRG	UEPVF	5.55	0.00	0.00					40.71	9.58		
NONRECURRING CHARGES (NRCs) - CURRENTLY COMBINED																
	2-Wire Voice Grade Loop/ Line Port Combination (PBX) - Conversion - Switch-As-Is			UEPRG	USAC2		2.80	0.41					40.71	9.58		
	2-Wire Voice Grade Loop/ Line Port Combination (PBX) - Conversion - Switch with Change			UEPRG	USACC		2.80	0.41					40.71	9.58		
	2-Wire Voice Grade Loop / Line Port Combination - Conversion - Subsequent Database Update						1.44						8.25			
ADDITIONAL NRCs																
	2-Wire Voice Grade Loop/ Line Port Combination (PBX) - Subsequent Activity			UEPRG	USAS2	0.00	0.00	0.00					40.71	9.58		
	PBX Subsequent Activity - Change/Rearrange Multiline Hunt Group						14.64	14.64					40.71	9.58		
2-WIRE VOICE GRADE LOOP WITH 2-WIRE LINE PORT (BUS - PBX)																
UNE Port/Loop Combination Rates																
	2-Wire VG Loop/Port Combo - Zone 1		1			16.55										
	2-Wire VG Loop/Port Combo - Zone 2		2			25.51										
	2-Wire VG Loop/Port Combo - Zone 3		3			44.44										
UNE Loop Rates																
	2-Wire Voice Grade Loop (SL 1) - Zone 1		1	UEPPX	UEPLX	14.35										
	2-Wire Voice Grade Loop (SL 1) - Zone 2		2	UEPPX	UEPLX	23.31										
	2-Wire Voice Grade Loop (SL 1) - Zone 3		3	UEPPX	UEPLX	42.24										
2-Wire Voice Grade Line Port Rates (BUS - PBX)																
	Line Side Unbundled Combination 2-Way PBX Trunk Port - Bus			UEPPX	UEPPC	2.20	90.00	90.00					40.71	9.58		
	Line Side Unbundled Outward PBX Trunk Port - Bus			UEPPX	UEPPO	2.20	90.00	90.00					40.71	9.58		
	Line Side Unbundled Incoming PBX Trunk Port - Bus			UEPPX	UEPP1	2.20	90.00	90.00					40.71	9.58		
	2-Wire Voice Unbundled 2-Way Combination PBX Alabama Calling Port			UEPPX	UEPA2	2.20	90.00	90.00					40.71	9.58		
	2-Wire Voice Unbundled PBX LD Terminal Ports			UEPPX	UEPLD	2.20	90.00	90.00					27.37	9.58		
	2-Wire Voice Unbundled 2-Way Combination PBX Usage Port			UEPPX	UEPXA	2.20	90.00	90.00					40.71	9.58		
	2-Wire Voice Unbundled PBX Toll Terminal Hotel Ports			UEPPX	UEPXB	2.20	90.00	90.00					40.71	9.58		
	2-Wire Voice Unbundled PBX LD DDD Terminals Port			UEPPX	UEPXC	2.20	90.00	90.00					40.71	9.58		
	2-Wire Voice Unbundled PBX LD Terminal Switchboard Port			UEPPX	UEPXD	2.20	90.00	90.00					40.71	9.58		
	2-Wire Voice Unbundled PBX LD Terminal Switchboard IDD Capable Port			UEPPX	UEPXE	2.20	90.00	90.00					40.71	9.58		
	2-Wire Voice Unbundled 2-Way PBX Hotel/Hospital Economy Administrative Calling Port			UEPPX	UEPXL	2.20	90.00	90.00					40.71	9.58		
	2-Wire Voice Unbundled 2-Way PBX Hotel/Hospital Economy Room Calling Port			UEPPX	UEPXM	2.20	90.00	90.00					40.71	9.58		
	2-Wire Voice Unbundled 1-Way Outgoing PBX Hotel/Hospital Discount Room Calling Port			UEPPX	UEPXO	2.20	90.00	90.00					40.71	9.58		
	2-Wire Voice Unbundled 1-Way Outgoing PBX Measured Port			UEPPX	UEPXS	2.20	90.00	90.00					40.71	9.58		
LOCAL NUMBER PORTABILITY																
	Local Number Portability (1 per port)			UEPPX	LNPCP	3.15	0.00	0.00					40.71	9.58		
FEATURES																
	All Features Offered			UEPPX	UEPVF	5.55	0.00	0.00					40.71	9.58		
NONRECURRING CHARGES (NRCs) - CURRENTLY COMBINED																
	2-Wire Voice Grade Loop/ Line Port Combination (PBX) - Conversion - Switch-As-Is			UEPPX	USAC2		2.80	0.41					40.71	9.58		
	2-Wire Voice Grade Loop/ Line Port Combination (PBX) - Conversion - Switch with Change			UEPPX	USACC		2.80	0.41					40.71	9.58		

CATEGORY	RATE ELEMENTS	Interim	Zone	BCS	USOC	RATES($) Rec	Nonrecurring First	Nonrecurring Add'l	Nonrecurring Disconnect First	Nonrecurring Disconnect Add'l	Svc Order Submitted Elec per LSR	Svc Order Submitted Manually per LSR	Incremental Charge - Manual Svc Order vs. Electronic-1st	Incremental Charge - Manual Svc Order vs. Electronic-Add'l	Incremental Charge - Manual Svc Order vs. Electronic-Disc 1st	Incremental Charge - Manual Svc Order vs. Electronic-Disc Add'l
											OSS Rates($)					
											SOMEC	SOMAN	SOMAN	SOMAN	SOMAN	SOMAN
	2-Wire Voice Grade Loop / Line Port Combination - Conversion - Subsequent Database Update						1.44						8.25			
ADDITIONAL NRCs																
	2-Wire Voice Grade Loop/ Line Port Combination (PBX) - Subsequent Activity			UEPPX	USAS2	0.00	0.00	0.00					40.71	9.58		
	PBX Subsequent Activity - Change/Rearrange Multiline Hunt Group						14.64	14.64					40.71	9.58		
2-WIRE VOICE GRADE LOOP WITH 2-WIRE ANALOG LINE COIN PORT																
UNE Port/Loop Combination Rates																
	2-Wire VG Coin Port/Loop Combo – Zone 1		1			16.88										
	2-Wire VG Coin Port/Loop Combo – Zone 2		2			25.84										
	2-Wire VG Coin Port/Loop Combo – Zone 3		3			44.77										
UNE Loop Rates																
	2-Wire Voice Grade Loop (SL1) - Zone 1		1	UEPCO	UEPLX	14.35										
	2-Wire Voice Grade Loop (SL1) - Zone 2		2	UEPCO	UEPLX	23.31										
	2-Wire Voice Grade Loop (SL1) - Zone 3		3	UEPCO	UEPLX	42.24										
2-Wire Voice Grade Line Ports (COIN)																
	2-Wire Coin 2-Way without Operator Screening and without Blocking (AL, KY, LA, MS)			UEPCO	UEPRF	2.53	90.00	90.00					40.71	9.58		
	2-Wire Coin 2-Way with Operator Screening (AL, KY)			UEPCO	UEPRE	2.53	90.00	90.00					40.71	9.58		
	2-Wire Coin 2-Way with Operator Screening and Blocking: 011, 900/976, 1+DDD (AL, KY, LA, MS)			UEPCO	UEPRA	2.53	90.00	90.00					40.71	9.58		
	2-Wire Coin 2-Way with Operator Screening and 011 Blocking (AL, LA, MS)			UEPCO	UEPRB	2.53	90.00	90.00					40.71	9.58		
	2-Wire Coin 2-Way with Operator Screening & Blocking: 900/976, 1+DDD, 011+, & Local (AL, KY, LA, MS)			UEPCO	UEPCD	2.53	90.00	90.00					40.71	9.58		
	2-Wire Coin Outward with Operator Screening and 011 Blocking (AL, FL)			UEPCO	UEPRK	2.53	90.00	90.00					40.71	9.58		
	2-Wire Coin Outward with Operator Screening and Blocking: 011, 900/976, 1+DDD (AL, KY, LA, MS)			UEPCO	UEPRH	2.53	90.00	90.00					40.71	9.58		
	2-Wire Coin Outward Operator Screening & Blocking: 900/976, 1+DDD, 011+, and Local (AL, KY, LA, MS)			UEPCO	UEPCN	2.53	90.00	90.00					40.71	9.58		
	2-Wire 2-Way Smartline with 900/976 (all states except LA)			UEPCO	UEPCK	2.53	90.00	90.00					40.71	9.58		
	2-Wire Coin Outward Smartline with 900/976 (all states except LA)			UEPCO	UEPCR	2.53	90.00	90.00					40.71	9.58		
ADDITIONAL UNE COIN PORT/LOOP (RC)																
	UNE Coin Port/Loop Combo Usage (Flat Rate)			UEPCO	URECU	1.56	90.00	90.00					40.71	9.58		
LOCAL NUMBER PORTABILITY																
	Local Number Portability (1 per port)			UEPCO	LNPCX	0.35										
NONRECURRING CHARGES - CURRENTLY COMBINED																
	2-Wire Voice Grade Loop / Line Port Combination - Conversion - Switch-as-is			UEPCO	USAC2		2.80	0.41					40.71	9.58		
	2-Wire Voice Grade Loop / Line Port Combination - Conversion - Switch with change			UEPCO	USACC		2.80	0.41					40.71	9.58		
ADDITIONAL NRCs																
	2-Wire Voice Grade Loop/Line Port Combination - Subsequent Activity			UEPCO	USAS2		0.00	0.00					40.71	9.58		
UNBUNDLED REMOTE CALL FORWARDING - RES																
Non-Recurring																
UNBUNDLED REMOTE CALL FORWARDING - Bus																
	Unbundled Remote Call Forwarding, InterState/Intra LATA-Bus			UEPVB	UERTR	2.07	21.93	21.93					27.37	12.97	17.77	1.44
Non-Recurring																
2-WIRE VOICE LOOP/ 2WIRE VOICE GRADE IO TRANSPORT/ 2-WIRE LINE PORT (RES)																
	2-Wire voice unbundles res, low usage line port with Caller ID (LUM)			UEPFR	UEPAP	2.07	225.00	175.00					40.71	9.58		
2-WIRE VOICE LOOP/ 2WIRE VOICE GRADE IO TRANSPORT/ 2-WIRE LINE PORT (BUS)																
UNBUNDLED PORT/LOOP COMBINATIONS - COST BASED RATES																
2-WIRE VOICE GRADE LOOP- BUS ONLY - WITH 2-WIRE DID TRUNK PORT																
UNE Port/Loop Combination Rates																

UNBUNDLED NETWORK ELEMENTS - Alabama													Attachment: 2		Exhibit: B	
CATEGORY	RATE ELEMENTS	Interim	Zone	BCS	USOC	RATES($)					Svc Order Submitted Elec per LSR	Svc Order Submitted Manually per LSR	Incremental Charge - Manual Svc Order vs. Electronic-1st	Incremental Charge - Manual Svc Order vs. Electronic-Add'l	Incremental Charge - Manual Svc Order vs. Electronic-Disc 1st	Incremental Charge - Manual Svc Order vs. Electronic-Disc Add'l
						Rec	Nonrecurring		Nonrecurring Disconnect		OSS Rates($)					
							First	Add'l	First	Add'l	SOMEC	SOMAN	SOMAN	SOMAN	SOMAN	SOMAN
	2-Wire VG Loop/2-Wire DID Trunk Port Combo - UNE Zone 1		1			29.59										
	2-Wire VG Loop/2-Wire DID Trunk Port Combo - UNE Zone 2		2			36.58										
	2-Wire VG Loop/2-Wire DID Trunk Port Combo - UNE Zone 3		3			45.06										
UNE Loop Rates																
	2-Wire Analog Voice Grade Loop - (SL2) - UNE Zone 1		1	UEPPX	UECD1	20.42										
	2-Wire Analog Voice Grade Loop - (SL2) - UNE Zone 2		2	UEPPX	UECD1	27.41										
	2-Wire Analog Voice Grade Loop - (SL2) - UNE Zone 3		3	UEPPX	UECD1	35.89										
UNE Port Rate																
	Exchange Ports - 2-Wire DID Port			UEPPX	UEPD1	9.17	600.00	45.00					40.71	9.58		
NONRECURRING CHARGES - CURRENTLY COMBINED																
	2-Wire Voice Grade Loop / 2-Wire DID Trunk Port Combination - Switch-as-is			UEPPX	USAC1		14.61	3.73					40.71	9.58		
	2-Wire Voice Grade Loop / 2-Wire DID Trunk Port Conversion with BellSouth Allowable Changes			UEPPX	USA1C		14.61	3.73					40.71	9.58		
ADDITIONAL NRCs																
	2-Wire DID Subsequent Activity - Add Trunks, Per Trunk			UEPPX	USAS1		53.56	53.56					40.71	9.58		
Telephone Number/Trunk Group Establisment Charges																
	DID Trunk Termination (One Per Port)			UEPPX	NDT	0.00	0.00	0.00								
	Additional DID Numbers for each Group of 20 DID Numbers			UEPPX	ND4	0.00	0.00	0.00								
	DID Numbers, Non- consecutive DID Numbers , Per Number			UEPPX	ND5	0.00	0.00	0.00								
	Reserve Non-Consecutive DID numbers			UEPPX	ND6	0.00	0.00	0.00								
	Reserve DID Numbers			UEPPX	NDV	0.00	0.00	0.00								
LOCAL NUMBER PORTABILITY																
	Local Number Portability (1 per port)			UEPPX	LNPCP	3.15	0.00	0.00								
2-WIRE ISDN DIGITAL GRADE LOOP WITH 2-WIRE ISDN DIGITAL LINE SIDE PORT																
UNE Port/Loop Combination Rates																
	2W ISDN Digital Grade Loop/2W ISDN Digital Line Side Port - UNE Zone 1		1	UEPPB UEPPR		36.62										
	2W ISDN Digital Grade Loop/2W ISDN Digital Line Side Port - UNE Zone 2		2	UEPPB UEPPR		44.49										
	2W ISDN Digital Grade Loop/2W ISDN Digital Line Side Port - UNE Zone 3		3	UEPPB UEPPR		55.39										
UNE Loop Rates																
	2-Wire ISDN Digital Grade Loop - UNE Zone 1		1	UEPPB UEPPR	USL2X	27.20							40.71	9.58		
	2-Wire ISDN Digital Grade Loop - UNE Zone 2		2	UEPPB UEPPR	USL2X	35.07							40.71	9.58		
	2-Wire ISDN Digital Grade Loop - UNE Zone 3		3	UEPPB UEPPR	USL2X	45.97							40.71	9.58		
UNE Port Rate																
	Exchange Port - 2-Wire ISDN Line Side Port			UEPPB UEPPR	UEPPB	9.42	525.00	400.00					40.71	9.58		
NONRECURRING CHARGES - CURRENTLY COMBINED																
	2-Wire ISDN Digital Grade Loop / 2-Wire ISDN Line Side Port Combination - Conversion			UEPPB UEPPR	USACB	0.00	77.01	54.04					40.71	9.58		
ADDITIONAL NRCs																
LOCAL NUMBER PORTABILITY																
	Local Number Portability (1 per port)			UEPPB UEPPR	LNPCX	0.35	0.00	0.00								
B-CHANNEL USER PROFILE ACCESS:																
	CVS/CSD (DMS/5ESS)			UEPPB UEPPR	U1UCA	0.00	0.00	0.00								
	CVS (EWSD)			UEPPB UEPPR	U1UCB	0.00	0.00	0.00								
	CSD			UEPPB UEPPR	U1UCC	0.00	0.00	0.00								
B-CHANNEL AREA PLUS USER PROFILE ACCESS: (AL,KY,LA,MS SC,MS, & TN)																
	CVS/CSD (DMS/5ESS)			UEPPB UEPPR	U1UCD	0.00	0.00	0.00								
	CVS (EWSD)			UEPPB UEPPR	U1UCE	0.00	0.00	0.00								
	CSD			UEPPB UEPPR	U1UCF	0.00	0.00	0.00								
USER TERMINAL PROFILE																
	User Terminal Profile (EWSD only)			UEPPB UEPPR	U1UMA	0.00	0.00	0.00								
VERTICAL FEATURES																
	All Vertical Features - One per Channel B User Profile			UEPPB UEPPR	UEPVF	5.55	0.00	0.00					40.71	9.58		
INTEROFFICE CHANNEL MILEAGE																

CATEGORY	RATE ELEMENTS	Interim	Zone	BCS	USOC	RATES($) Rec	Nonrecurring First	Nonrecurring Add'l	Nonrecurring Disconnect First	Nonrecurring Disconnect Add'l	Svc Order Submitted Elec per LSR	Svc Order Submitted Manually per LSR	Incremental Charge - Manual Svc Order vs. Electronic-1st	Incremental Charge - Manual Svc Order vs. Electronic-Add'l	Incremental Charge - Manual Svc Order vs. Electronic-Disc 1st	Incremental Charge - Manual Svc Order vs. Electronic-Disc Add'l
											OSS Rates($)					
											SOMEC	SOMAN	SOMAN	SOMAN	SOMAN	SOMAN
	Interoffice Channel mileage each, including first mile and facilities termination			UEPPB UEPPR	M1GNC	17.81	107.11	48.27					40.71	9.58		
	Interoffice Channel mileage each, additional mile			UEPPB UEPPR	M1GNM	0.0339	0.00	0.00				0.00				
4-WIRE DS1 DIGITAL LOOP WITH 4-WIRE ISDN DS1 DIGITAL TRUNK PORT																
UNE Port/Loop Combination Rates																
	4W DS1 Digital Loop/4W ISDN DS1 Digital Trunk Port - UNE Zone 1		1	UEPPP		198.29										
	4W DS1 Digital Loop/4W ISDN DS1 Digital Trunk Port - UNE Zone 2		2	UEPPP		274.00										
	4W DS1 Digital Loop/4W ISDN DS1 Digital Trunk Port - UNE Zone 3		3	UEPPP		425.41										
UNE Loop Rates																
	4-Wire DS1 Digital Loop - UNE Zone 1		1	UEPPP	USL4P	101.92							40.71	9.58		
	4-Wire DS1 Digital Loop - UNE Zone 2		2	UEPPP	USL4P	177.63							40.71	9.58		
	4-Wire DS1 Digital Loop - UNE Zone 3		3	UEPPP	USL4P	329.04							40.71	9.58		
UNE Port Rate																
	Exchange Ports - 4-Wire ISDN DS1 Port			UEPPP	UEPPP	96.37	1,150.00	1,150.00					40.71	9.58		
NONRECURRING CHARGES - CURRENTLY COMBINED																
	4-Wire DS1 Digital Loop / 4-Wire ISDN DS1 Digital Trunk Port Combination - Conversion -Switch-as-is			UEPPP	USACP	0.00	238.13	157.11					40.71	9.58		
ADDITIONAL NRCs																
	4-Wire DS1 Loop/4-W ISDN Digtl Trk Port - Subsqt Actvy-Inward/two way tel nos within Std Allowance (except NC)			UEPPP	PR7TF		0.9801									
	4-Wire DS1 Loop / 4-Wire ISDN DS1 Digital Trunk Port - Outward Tel Numbers (All States except NC)			UEPPP	PR7TO		23.02	23.02								
	4-Wire DS1 Loop / 4-Wire ISDN DS1 Digital Trk Port - Subsequent Inward Tel Nos Above Std Allowance			UEPPP	PR7ZT		46.05	46.05								
LOCAL NUMBER PORTABILITY																
	Local Number Portability (1 per port)			UEPPP	LNPCN	1.75										
INTERFACE (Provsioning Only)																
	Voice/Data			UEPPP	PR71V	0.00	0.00	0.00								
	Digital Data			UEPPP	PR71D	0.00	0.00	0.00								
	Inward Data			UEPPP	PR71E	0.00	0.00	0.00								
New or Additional "B" Channel																
	New or Additional - Voice/Data B Channel			UEPPP	PR7BV	0.00	29.05									
	New or Additional - Digital Data B Channel			UEPPP	PR7BF	0.00	29.05									
	New or Additional Inward Data B Channel			UEPPP	PR7BD	0.00	29.05									
CALL TYPES																
	Inward			UEPPP	PR7C1	0.00	0.00	0.00								
	Outward			UEPPP	PR7C0	0.00	0.00	0.00								
	Two-way			UEPPP	PR7CC	0.00	0.00	0.00								
Interoffice Channel Mileage																
	Fixed Each Including First Mile			UEPPP	1LN1A	80.382	198.15	148.18	25.44				40.71	9.58		
	Each Airline-Fractional Additional Mile			UEPPP	1LN1B	0.692										
4-WIRE DS1 DIGITAL LOOP WITH 4-WIRE DDITS TRUNK PORT																
UNE Port/Loop Combination Rates																
	4W DS1 Digital Loop/4W DDITS Trunk Port - UNE Zone 1		1	UEPDC		170.59										
	4W DS1 Digital Loop/4W DDITS Trunk Port - UNE Zone 2		2	UEPDC		246.30										
	4W DS1 Digital Loop/4W DDITS Trunk Port - UNE Zone 3		3	UEPDC		397.71										
UNE Loop Rates																
	4-Wire DS1 Digital Loop - UNE Zone 1		1	UEPDC	USLDC	101.92										
	4-Wire DS1 Digital Loop - UNE Zone 2		2	UEPDC	USLDC	177.63										
	4-Wire DS1 Digital Loop - UNE Zone 3		3	UEPDC	USLDC	329.04										
UNE Port Rate																
	4-Wire DDITS Digital Trunk Port			UEPDC	UDD1T	68.67										
NONRECURRING CHARGES - CURRENTLY COMBINED																
	4-Wire DS1 Digital Loop / 4-Wire DDITS Trunk Port Combination - Switch-as-is			UEPDC	USAC4		258.98	134.03					40.71	9.58		

CATEGORY	RATE ELEMENTS	Interim	Zone	BCS	USOC	RATES($) Rec	Nonrecurring First	Nonrecurring Add'l	Nonrecurring Disconnect First	Nonrecurring Disconnect Add'l	Svc Order Submitted Elec per LSR	Svc Order Submitted Manually per LSR	Incremental Charge - Manual Svc Order vs. Electronic-1st	Incremental Charge - Manual Svc Order vs. Electronic-Add'l	Incremental Charge - Manual Svc Order vs. Electronic-Disc 1st	Incremental Charge - Manual Svc Order vs. Electronic-Disc Add'l
											OSS Rates($)					
							First	Add'l	First	Add'l	SOMEC	SOMAN	SOMAN	SOMAN	SOMAN	SOMAN
	4-Wire DS1 Digital Loop / 4-Wire DDITS Trunk Port Combination - Conversion with DS1 Changes			UEPDC	USAWA		258.98	134.04					40.71	9.58		
	4-Wire DS1 Digital Loop / 4-Wire DDITS Trunk Port Combination - Conversion with Change - Trunk			UEPDC	USAWB		258.98	134.03					40.71	9.58		
ADDITIONAL NRCs																
	4-Wire DS1 Loop / 4-Wire DDITS Trunk Port - NRC - Subsequent Channel Activation/Chan - 2-Way Trunk			UEPDC	UDTTA		28.85	28.95					40.71	9.58		
	4-Wire DS1 Loop / 4-Wire DDITS Trunk Port - Subsequent Channel Activation/Chan - 1-Way Outward Trunk			UEPDC	UDTTB		28.85	28.85					40.71	9.58		
	4-Wire DS1 Loop / 4-Wire DDITS Trunk Port - Subsqnt Channel Activation/Chan Inward Trunk w/out DID			UEPDC	UDTTC		28.85	28.85					40.71	9.58		
	4-Wire DS1 Loop / 4-Wire DDITS Trunk Port - Subsqnt Chan Activation Per Chan - Inward Trunk with DID			UEPDC	UDTTD		28.85	28.85					40.71	9.58		
	4-Wire DS1 Loop / 4-Wire DDITS Trunk Port - Subsqnt Chan Activation / Chan - 2-Way DID w User Trans			UEPDC	UDTTE		28.85	28.85					40.71	9.58		
BIPOLAR 8 ZERO SUBSTITUTION																
	B8ZS -Superframe Format			UEPDC	CCOSF		0.00	600.00								
	B8ZS - Extended Superframe Format			UEPDC	CCOEF		0.00	600.00								
Alternate Mark Inversion																
	AMI -Superframe Format			UEPDC	MCOSF		0.00	0.00								
	AMI - Extended SuperFrame Format			UEPDC	MCOPO		0.00	0.00								
Telephone Number/Trunk Group Establisment Charges																
	Telephone Number for 2-Way Trunk Group			UEPDC	UDTGX	0.00										
	Telephone Number for 1-Way Outward Trunk Group			UEPDC	UDTGY	0.00										
	Telephone Number for 1-Way Inward Trunk Group Without DID			UEPDC	UDTGZ	0.00										
	DID Numbers for each Group of 20 DID Numbers			UEPDC	ND4	0.00	0.00									
	DID Numbers, Non- consecutive DID Numbers , Per Number			UEPDC	ND5	0.00										
	Reserve Non-Consecutive DID Nos.			UEPDC	ND6	0.00	0.00	0.00								
	Reserve DID Numbers			UEPDC	NDV	0.00	0.00	0.00								
Dedicated DS1 (Interoffice Channel Mileage) - FX/FCO for 4-Wire DS1 Digital Loop with 4-Wire DDITS Trunk Port																
	Interoffice Channel Mileage - Fixed rate 0-8 miles (Facilities Termination)			UEPDC	1LNO1	79.69	198.15	148.18	25.44	20.42			40.71	9.58		
	Interoffice Channel Mileage - Additional rate per mile - 0-8 miles			UEPDC	1LNOA	0.692	0.00	0.00								
	Interoffice Channel Mileage - Fixed rate 9-25 miles (Facilities Termination)			UEPDC	1LNO2	0.00	0.00	0.00								
	Interoffice Channel Mileage - Additional rate per mile - 9-25 miles			UEPDC	1LNOB	0.692	0.00	0.00								
	Interoffice Channel Mileage - Fixed rate 25+ miles (Facilities Termination)			UEPDC	1LNO3	0.00	0.00	0.00	0.00							
	Interoffice Channel Mileage - Additional rate per mile - 25+ miles			UEPDC	1LNOC	0.692	0.00	0.00								
	Local Number Portability, per DS0 Activated			UEPDC	LNPCP	3.15	0.00	0.00	0.00							
	Central Office Termininating Point			UEPDC	CTG	0.00										
4-WIRE DS1 LOOP WITH CHANNELIZATION WITH PORT																
System is 1 DS1 Loop, 1 D4 Channel Bank, and up to 24 Feature Activations																
Each System can have up to 24 combinations of rates depending on type and number of ports used																
UNE DS1 Loop																
	4-Wire DS1 Loop - UNE Zone 1		1	UEPMG	USLDC	101.92	0.00	0.00								
	4-Wire DS1 Loop - UNE Zone 2		2	UEPMG	USLDC	177.63	0.00	0.00								
	4-Wire DS1 Loop - UNE Zone 3		3	UEPMG	USLDC	329.04	0.00	0.00								
UNE DSO Channelization Capacities (D4 Channel Bank Configurations)																
	24 DSO Channel Capacity - 1 per DS1			UEPMG	VUM24	115.89	0.00	0.00					40.71	9.58		
	48 DSO Channel Capacity - 1 per 2 DS1s			UEPMG	VUM48	231.78	0.00	0.00					40.71	9.58		
	96 DSO Channel Capacity -1per 4 DS1s			UEPMG	VUM96	463.56	0.00	0.00					40.71	9.58		
	144 DS0 Channel Capacity - 1 per 6 DS1s			UEPMG	VUM14	695.34	0.00	0.00					40.71	9.58		
	192 DS0 Channel Capacity -1 per 8 DS1s			UEPMG	VUM19	980.00	0.00	0.00					40.71	9.58		
	240 DS0 Channel Capacity - 1 per 10 DS1s			UEPMG	VUM20	1,158.90	0.00	0.00					40.71	9.58		
	288 DS0 Channel Capacity - 1 per 12 DS1s			UEPMG	VUM28	1,390.68	0.00	0.00					40.71	9.58		

UNBUNDLED NETWORK ELEMENTS - Alabama

Attachment: 2 | Exhibit: B

CATEGORY	RATE ELEMENTS	Interim	Zone	BCS	USOC	RATES($) Rec	Nonrecurring First	Nonrecurring Add'l	Nonrecurring Disconnect First	Nonrecurring Disconnect Add'l	Svc Order Submitted Elec per LSR	Svc Order Submitted Manually per LSR	Incremental Charge - Manual Svc Order vs. Electronic-1st	Incremental Charge - Manual Svc Order vs. Electronic-Add'l	Incremental Charge - Manual Svc Order vs. Electronic-Disc 1st	Incremental Charge - Manual Svc Order vs. Electronic-Disc Add'l
											OSS Rates($)					
											SOMEC	SOMAN	SOMAN	SOMAN	SOMAN	SOMAN
	384 DS0 Channel Capacity - 1 per 16 DS1s			UEPMG	VUM38	1,854.24	0.00	0.00					40.71	9.58		
	480 DS0 Channel Capacity - 1 per 20 DS1s			UEPMG	VUM40	2,317.80	0.00	0.00					40.71	9.58		
	576 DS0 Channel Capacity -1 per 24 DS1s			UEPMG	VUM57	2,781.36	0.00	0.00					40.71	9.58		
	672 DS0 Channel Capacity - 1 per 28 DS1s			UEPMG	VUM67	3,244.92	0.00	0.00					40.71	9.58		
	Non-Recurring Charges (NRC) Associated with 4-Wire DS1 Loop with Channeliztion with Port - Conversion Charge Based on a System															
	A Minimum System configuration is One (1) DS1, One (1) D4 Channel Bank, and Up To 24 DSO Ports with Feature Activations.															
	Multiples of this configuration functioning as one are considered Add'l after the minimum system configuration is counted.															
	NRC - Conversion (Currently Combined) with or without BellSouth Allowed Changes			UEPMG	USAC4	0.00	300.95	16.72					40.71	9.58		
	System Additions at End User Locations Where 4-Wire DS1 Loop with Channelization with Port Combination Currently Exists and															
	New (Not Currently Combined) In GA, KY, LA, MS & TN Only															
	1 DS1/D4 Channel Bank - Add NRC for each Port and Assoc Fea Activation - New GA, LA, KY, MS, &TN Only			UEPMG	VUMD4	0.00	716.11	468.04	148.75	17.65			40.71	9.58		
	Bipolar 8 Zero Substitution															
	Clear Channel Capability Format, superframe - Subsequent Activity Only			UEPMG	CCOSF	0.00	0.00	600.00								
	Clear Channel Capability Format - Extended Superframe - Subsequent Activity Only			UEPMG	CCOEF	0.00	0.00	600.00								
	Alternate Mark Inversion (AMI)															
	Superframe Format			UEPMG	MCOSF	0.00	0.00	0.00								
	Extended Superframe Format			UEPMG	MCOPO	0.00	0.00	0.00								
	Exchange Ports Associated with 4-Wire DS1 Loop with Channelization with Port															
	Exchange Ports															
	Line Side Combination Channelized PBX Trunk Port - Business			UEPPX	UEPCX	1.58	0.00	0.00	0.00	0.00			40.71	9.58		
	Line Side Outward Channelized PBX Trunk Port - Business			UEPPX	UEPOX	1.58	0.00	0.00	0.00	0.00			40.17	9.58		
	Line Side Inward Only Channelized PBX Trunk Port without DID			UEPPX	UEP1X	1.58	0.00	0.00	0.00	0.00			40.71	9.58		
	2-Wire Trunk Side Unbundled Channelized DID Trunk Port			UEPPX	UEPDM	9.20	0.00	0.00	0.00	0.00			40.71	9.58		
	2-Wire Channelized PBX Area Calling Service Combination Port (AL Only)			UEPPX	UEPA4	1.58	0.00	0.00					40.71	9.58		
	2 Wire Channelized PBX Area Calling Service Outgoing Only Port (AL Only)			UEPPX	UEPA3	1.58	0.00	0.00					40.71	9.58		
	Feature Activations - Unbundled Loop Concentration															
	Feature (Service) Activation for each Line Side Port Terminated in D4 Bank			UEPPX	1PQWM	0.64	25.39	13.41	4.19	4.16			40.71	9.58		
	Feature (Service) Activation for each Trunk Side Port Terminated in D4 Bank			UEPPX	1PQWU	0.64	78.13	18.42	59.24	11.58			40.17	9.58		
	Telephone Number/ Group Establishment Charges for DID Service															
	DID Trunk Termination (1 per Port)			UEPPX	NDT	0.00	0.00	0.00								
	DID Numbers - groups of 20 - Valid all States			UEPPX	ND4	0.00	0.00	0.00								
	Non-Consecutive DID Numbers - per number			UEPPX	ND5	0.00	0.00	0.00								
	Reserve Non-Consecutive DID Numbers			UEPPX	ND6	0.00	0.00	0.00								
	Reserve DID Numbers			UEPPX	NDV	0.00	0.00	0.00								
	Local Number Portability															
	Local Number Portability - 1 per port			UEPPX	LNPCP	3.15	0.00	0.00								
	FEATURES - Vertical and Optional															
	Local Switching Features Offered with Line Side Ports Only															
	All Features Available			UEPPX	UEPVF	5.55	0.00	0.00					40.71	9.58		
UNBUNDLED PORT LOOP COMBINATIONS - MARKET RATES																
	Market Rates shall apply where BellSouth is not required to provide unbundled local switching or switch ports per FCC and/or State Commission rules.															
	These scenarios include:															
	1. Unbundled port/loop combinations that are Not Currently Combined in Alabama, Florida and North Carolina.															
	2. Unbundled port/loop combinations that are Currently Combined or Not Currently Combined in Zone 1 of the Top 8 MSAS in BellSouth's region for end users with 4 or more DS0 equivalent lines.															
	The Top 8 MSAs in BellSouth's region are: FL (Orlando, Ft. Lauderdale, Miami); GA (Atlanta); LA (New Orleans); NC (Greensboro-Winston Salem-Highpoint/Charlotte-Gastonia-Rock Hill); TN (Nashville).															
	BellSouth currently is developing the billing capability to mechanically bill the recurring and non-recurring Market Rates in this section except for nonrecurring charges for not currently combined in AL, FL and NC. In the interim where BellSouth cannot bill Market Rates, BellSouth shall bill the rates in the Cost-Based section preceding in lieu of the Market Rates and reserves the right to true-up the billing difference.															
	The Market Rate for unbundled ports includes all available features in all states.															

CATEGORY	RATE ELEMENTS	Interim	Zone	BCS	USOC	RATES($) Rec	Nonrecurring First	Nonrecurring Add'l	Nonrecurring Disconnect First	Nonrecurring Disconnect Add'l	Svc Order Submitted Elec per LSR	Svc Order Submitted Manually per LSR	Incremental Charge - Manual Svc Order vs. Electronic- 1st	Incremental Charge - Manual Svc Order vs. Electronic- Add'l	Incremental Charge - Manual Svc Order vs. Electronic- Disc 1st	Incremental Charge - Manual Svc Order vs. Electronic- Disc Add'l
											OSS Rates($)					
											SOMEC	SOMAN	SOMAN	SOMAN	SOMAN	SOMAN
	End Office and Tandem Switching Usage and Common Transport Usage rates in the Port section of this rate exhibit shall apply to all combinations of loop/port network elements except for UNE Coin Port/Loop Combinations which have a flat rate usage charge (USOC: URECU).															
	For Not Currently Combined scenarios where Market Rates apply, the Nonrecurring charges are listed in the First and Additional NRC columns for each Port USOC. For Currently Combined scenarios, the Nonrecurring charges are listed in the NRC - Currently Combined section. Additional NRCs may apply also and are categorized accordingly.															
	2-WIRE VOICE GRADE LOOP WITH 2-WIRE LINE PORT (RES)															
	UNE Port/Loop Combination Rates															
	2-Wire VG Loop/Port Combo - Zone 1		1			28.35										
	2-Wire VG Loop/Port Combo - Zone 2		2			37.31										
	2-Wire VG Loop/Port Combo - Zone 3		3			56.24										
	UNE Loop Rates															
	2-Wire Voice Grade Loop (SL1) - Zone 1		1	UEPRX	UEPLX	14.35										
	2-Wire Voice Grade Loop (SL1) - Zone 2		2	UEPRX	UEPLX	23.31										
	2-Wire Voice Grade Loop (SL1) - Zone 3		3	UEPRX	UEPLX	42.24										
	2-Wire Voice Grade Line Port (Res)															
	2-Wire voice unbundled port - residence			UEPRX	UEPRL	14.00	90.00	90.00					40.71	9.58		
	2-Wire voice unbundled port with Caller ID - res			UEPRX	UEPRC	14.00	90.00	90.00					40.71	9.58		
	2-Wire voice unbundled port outgoing only - res			UEPRX	UEPRO	14.00	90.00	90.00					40.71	9.58		
	2-Wire voice unbundles res, low usage line port with Caller ID (LUM)			UEPRX	UEPAP	14.00	90.00	90.00					40.71	9.58		
	LOCAL NUMBER PORTABILITY															
	Local Number Portability (1 per port)			UEPRX	LNPCX	0.35										
	FEATURES															
	All Features Offered			UEPRX	UEPVF	0.00	0.00	0.00								
	NONRECURRING CHARGES - CURRENTLY COMBINED															
	ADDITIONAL NRCs															
	NRC - 2-Wire Voice Grade Loop/Line Port Combination - Subsequent			UEPRX	USAS2		0.00	0.00					40.71	9.58		
	2-WIRE VOICE GRADE LOOP WITH 2-WIRE LINE PORT (BUS)															
	UNE Port/Loop Combination Rates															
	2-Wire VG Loop/Port Combo - Zone 1		1			28.35										
	2-Wire VG Loop/Port Combo - Zone 2		2			37.31										
	2-Wire VG Loop/Port Combo - Zone 3		3			56.24										
	UNE Loop Rates															
	2-Wire Voice Grade Loop (SL1) - Zone 1		1	UEPBX	UEPLX	14.35										
	2-Wire Voice Grade Loop (SL1) - Zone 2		2	UEPBX	UEPLX	23.31										
	2-Wire Voice Grade Loop (SL1) - Zone 3		3	UEPBX	UEPLX	42.24										
	2-Wire Voice Grade Line Port (Bus)															
	2-Wire voice unbundled port without Caller ID - bus			UEPBX	UEPBL	14.00	90.00	90.00					40.71	9.58		
	2-Wire voice unbundled port with Caller + E484 ID - bus			UEPBX	UEPBC	14.00	90.00	90.00					40.71	9.58		
	2-Wire voice unbundled port outgoing only - bus			UEPBX	UEPBO	14.00	90.00	90.00					40.71	9.58		
	LOCAL NUMBER PORTABILITY															
	Local Number Portability (1 per port)			UEPBX	LNPCX	0.35										
	FEATURES															
	All Features Offered			UEPBX	UEPVF	0.00	0.00	0.00					40.71	9.58		
	NONRECURRING CHARGES - CURRENTLY COMBINED															
	ADDITIONAL NRCs															
	NRC - 2-Wire Voice Grade Loop/Line Port Combination - Subsequent			UEPBX	USAS2		0.00	0.00					40.71	9.58		
	2-WIRE VOICE GRADE LOOP WITH 2-WIRE LINE PORT (RES - PBX)															
	UNE Port/Loop Combination Rates															
	2-Wire VG Loop/Port Combo - Zone 1		1			28.35										
	2-Wire VG Loop/Port Combo - Zone 2		2			37.31										
	2-Wire VG Loop/Port Combo - Zone 3		3			56.24										
	UNE Loop Rates															
	2-Wire Voice Grade Loop (SL1) - Zone 1		1	UEPRG	UEPLX	14.35										
	2-Wire Voice Grade Loop (SL1) - Zone 2		2	UEPRG	UEPLX	23.31										
	2-Wire Voice Grade Loop (SL1) - Zone 3		3	UEPRG	UEPLX	42.24										
	2-Wire Voice Grade Line Port Rates (RES - PBX)															

CATEGORY	RATE ELEMENTS	Interim	Zone	BCS	USOC	RATES($) Rec	Nonrecurring First	Nonrecurring Add'l	Nonrecurring Disconnect First	Nonrecurring Disconnect Add'l	Svc Order Submitted Elec per LSR	Svc Order Submitted Manually per LSR	Incremental Charge - Manual Svc Order vs. Electronic-1st	Incremental Charge - Manual Svc Order vs. Electronic-Add'l	Incremental Charge - Manual Svc Order vs. Electronic-Disc 1st	Incremental Charge - Manual Svc Order vs. Electronic-Disc Add'l
											OSS Rates($)					
											SOMEC	SOMAN	SOMAN	SOMAN	SOMAN	SOMAN
	2-Wire VG Unbundled Combination 2-Way PBX Trunk Port - Res			UEPRG	UEPRD	14.00	90.00	90.00					40.71	9.58		
	LOCAL NUMBER PORTABILITY															
	Local Number Portability (1 per port)			UEPRG	LNPCP	3.15	0.00	0.00								
	FEATURES															
	All Features Offered			UEPRG	UEPVF	0.00	0.00	0.00					40.71	9.58		
	ADDITIONAL NRCs															
	2 Wire Loop/Line Side Port Combination - Non feature - Subsequent Activity- Nonrecurring						0.00	0.00					40.71	9.58		
	PBX Subsequent Activity - Change/Rearrange Multiline Hunt Group						14.64	14.64					40.71	9.58		
	2-WIRE VOICE GRADE LOOP WITH 2-WIRE LINE PORT (BUS - PBX)															
	UNE Port/Loop Combination Rates															
	2-Wire VG Loop/Port Combo - Zone 1		1			28.35										
	2-Wire VG Loop/Port Combo - Zone 2		2			37.31										
	2-Wire VG Loop/Port Combo - Zone 3		3			56.24										
	UNE Loop Rates															
	2-Wire Voice Grade Loop (SL1) - Zone 1		1	UEPPX	UEPLX	14.35										
	2-Wire Voice Grade Loop (SL1) - Zone 2		2	UEPPX	UEPLX	23.31										
	2-Wire Voice Grade Loop (SL1) - Zone 3		3	UEPPX	UEPLX	42.24										
	2-Wire Voice Grade Line Port Rates (BUS - PBX)															
	Line Side Unbundled Combination 2-Way PBX Trunk Port - Bus			UEPPX	UEPPC	14.00	90.00	90.00					40.71	9.58		
	Line Side Unbundled Outward PBX Trunk Port - Bus			UEPPX	UEPPO	14.00	90.00	90.00					40.71	9.58		
	Line Side Unbundled Incoming PBX Trunk Port - Bus			UEPPX	UEPP1	14.00	90.00	90.00					40.71	9.58		
	2-Wire Voice Unbundled 2-Way Combination PBX Alabama Calling Port			UEPPX	UEPA2	14.00	90.00	90.00					40.71	9.58		
	2-Wire Voice Unbundled PBX LD Terminal Ports			UEPPX	UEPLD	14.00	90.00	90.00					40.71	9.58		
	2-Wire Voice Unbundled 2-Way Combination PBX Usage Port			UEPPX	UEPXA	14.00	90.00	90.00					40.71	9.58		
	2-Wire Voice Unbundled PBX Toll Terminal Hotel Ports			UEPPX	UEPXB	14.00	90.00	90.00					40.71	9.58		
	2-Wire Voice Unbundled PBX LD DDD Terminals Port			UEPPX	UEPXC	14.00	90.00	90.00					40.71	9.58		
	2-Wire Voice Unbundled PBX LD Terminal Switchboard Port			UEPPX	UEPXD	14.00	90.00	90.00					40.71	9.58		
	2-Wire Voice Unbundled PBX LD Terminal Switchboard IDD Capable Port			UEPPX	UEPXE	14.00	90.00	90.00					40.71	9.58		
	2-Wire Voice Unbundled 2-Way PBX Hotel/Hospital Economy Administrative Calling Port			UEPPX	UEPXL	14.00	90.00	90.00					40.71	9.58		
	2-Wire Voice Unbundled 2-Way PBX Hotel/Hospital Economy Room Calling Port			UEPPX	UEPXM	14.00	90.00	90.00					40.71	9.58		
	2-Wire Voice Unbundled 1-Way Outgoing PBX Hotel/Hospital Discount Room Calling Port			UEPPX	UEPXO	14.00	90.00	90.00					40.71	9.58		
	2-Wire Voice Unbundled 1-Way Outgoing PBX Measured Port			UEPPX	UEPXS	14.00	90.00	90.00					40.71	9.58		
	LOCAL NUMBER PORTABILITY															
	Local Number Portability (1 per port)			UEPPX	LNPCP	3.15	0.00	0.00								
	FEATURES															
	All Features Offered			UEPPX	UEPVF	0.00	0.00	0.00					40.71	9.58		
	NONRECURRING CHARGES - CURRENTLY COMBINED															
	ADDITIONAL NRCs															
	2-Wire Voice Grade Loop/ Line Port Combination - Subsequent			UEPPX	USAS2	0.00	0.00	0.00					40.71	9.58		
	2 Wire Loop/Line Side Port Combination - Non feature - Subsequent Activity- Nonrecurring						0.00	0.00					40.71	9.58		
	PBX Subsequent Activity - Change/Rearrange Multiline Hunt Group						14.64	14.64					40.71	9.58		
	2-WIRE VOICE GRADE LOOP WITH 2-WIRE ANALOG LINE COIN PORT															
	UNE Port/Loop Combination Rates															
	2-Wire VG Coin Port/Loop Combo – Zone 1		1			28.35										
	2-Wire VG Coin Port/Loop Combo – Zone 2		2			37.31										
	2-Wire VG Coin Port/Loop Combo – Zone 3		3			56.24										
	UNE Loop Rates															

CATEGORY	RATE ELEMENTS	Interim	Zone	BCS	USOC	RATES($) Rec	Nonrecurring First	Nonrecurring Add'l	Nonrecurring Disconnect First	Nonrecurring Disconnect Add'l	Svc Order Submitted Elec per LSR	Svc Order Submitted Manually per LSR	Incremental Charge - Manual Svc Order vs. Electronic-1st	Incremental Charge - Manual Svc Order vs. Electronic-Add'l	Incremental Charge - Manual Svc Order vs. Electronic-Disc 1st	Incremental Charge - Manual Svc Order vs. Electronic-Disc Add'l
											OSS Rates($)					
											SOMEC	SOMAN	SOMAN	SOMAN	SOMAN	SOMAN
	2-Wire Voice Grade Loop (SL1) - Zone 1		1	UEPCO	UEPLX	14.35										
	2-Wire Voice Grade Loop (SL1) - Zone 2		2	UEPCO	UEPLX	23.31										
	2-Wire Voice Grade Loop (SL1) - Zone 3		3	UEPCO	UEPLX	42.24										
2-Wire Voice Grade Line Port Rates (Coin)																
	2-Wire Coin 2-Way without Operator Screening and without Blocking (AL, KY, LA, MS)			UEPCO	UEPRF	14.00	90.00	90.00					40.71	9.58		
	2-Wire Coin 2-Way with Operator Screening (AL, KY)			UEPCO	UEPRE	14.00	90.00	90.00					40.71	9.58		
	2-Wire Coin 2-Way with Operator Screening and Blocking: 011, 900/976, 1+DDD (AL, KY, LA, MS, SC)			UEPCO	UEPRA	14.00	90.00	90.00					40.71	9.58		
	2-Wire Coin 2-Way with Operator Screening and 011 Blocking (AL, LA, MS)			UEPCO	UEPRB	14.00	90.00	90.00					40.71	9.58		
	2-Wire Coin 2-Way with Operator Screening & Blocking: 900/976, 1+DDD, 011+, & Local (AL, KY, LA, MS)			UEPCO	UEPCD	14.00	90.00	90.00					40.71	9.58		
	2-Wire Coin Outward with Operator Screening and 011 Blocking (AL, FL)			UEPCO	UEPRK	14.00	90.00	90.00					40.71	9.58		
	2-Wire Coin Outward with Operator Screening and Blocking: 011, 900/976, 1+DDD (AL, KY, LA, MS)			UEPCO	UEPRH	14.00	90.00	90.00					40.71	9.58		
	2-Wire Coin Outward Operator Screening & Blocking: 900/976, 1+DDD, 011+, & Local (AL, KY, LA, MS)			UEPCO	UEPCN	14.00	90.00	90.00					40.71	9.58		
LOCAL NUMBER PORTABILITY																
	Local Number Portability (1 per port)			UEPCO	LNPCX	0.35										
ADDITIONAL NRCs																
	2-Wire Voice Grade Loop/ Line Port Combination - Subsequent			UEPCO	USAS2		0.00	0.00					40.71	9.58		
UNBUNDLED PORT/LOOP COMBINATIONS - MARKET BASED RATES																
2-WIRE VOICE GRADE LOOP- BUS ONLY - WITH 2-WIRE DID TRUNK PORT																
UNE Port/Loop Combination Rates																
	2-Wire VG Loop/2-Wire DID Trunk Port Combo - UNE Zone 1		1			69.59										
	2-Wire VG Loop/2-Wire DID Trunk Port Combo - UNE Zone 2		2			76.58										
	2-Wire VG Loop/2-Wire DID Trunk Port Combo - UNE Zone 3		3			85.06										
UNE Loop Rates																
	2-Wire Analog Voice Grade Loop - (SL2) - UNE Zone 1		1	UEPPX	UECD1	20.42										
	2-Wire Analog Voice Grade Loop - (SL2) - UNE Zone 2		2	UEPPX	UECD1	27.41										
	2-Wire Analog Voice Grade Loop - (SL2) - UNE Zone 3		3	UEPPX	UECD1	35.89										
UNE Port Rate																
	Exchange Ports - 2-Wire DID Port			UEPPX	UEPD1	40.00	600.00	45.00					40.71	9.58		
NONRECURRING CHARGES - CURRENTLY COMBINED																
ADDITIONAL NRCs																
	2-Wire DID Subsequent Activity - Add Trunks, Per Trunk			UEPPX	USAS1		53.56	53.56					40.71	9.58		
Telephone Number/Trunk Group Establisment Charges																
	DID Trunk Termination (One Per Port)			UEPPX	NDT	0.00	0.00	0.00								
	Additional DID Numbers for each Group of 20 DID Numbers			UEPPX	ND4	0.00	0.00	0.00								
	DID Numbers, Non- consecutive DID Numbers , Per Number			UEPPX	ND5	0.00	0.00	0.00								
	Reserve Non-Consecutive DID numbers			UEPPX	ND6	0.00	0.00	0.00								
	Reserve DID Numbers			UEPPX	NDV	0.00	0.00	0.00								
LOCAL NUMBER PORTABILITY																
	Local Number Portability (1 per port)			UEPPX	LNPCP	3.15	0.00	0.00								
2-WIRE ISDN DIGITAL GRADE LOOP WITH 2-WIRE ISDN DIGITAL LINE SIDE PORT																
UNE Port/Loop Combination Rates																
	2W ISDN Digital Grade Loop/2W ISDN Digital Line Side Port - UNE Zone 1		1	UEPPB UEPPR		87.20										
	2W ISDN Digital Grade Loop/2W ISDN Digital Line Side Port - UNE Zone 2		2	UEPPB UEPPR		104.49										
	2W ISDN Digital Grade Loop/2W ISDN Digital Line Side Port - UNE Zone 3		3	UEPPB UEPPR		115.97										
UNE Loop Rates																
	2-Wire ISDN Digital Grade Loop - UNE Zone 1		1	UEPPB UEPPR	USL2X	27.20							40.71	9.58		
	2-Wire ISDN Digital Grade Loop - UNE Zone 2		2	UEPPB UEPPR	USL2X	35.07							40.71	9.58		

CATEGORY	RATE ELEMENTS	Interim	Zone	BCS	USOC	RATES($) Rec	Nonrecurring First	Nonrecurring Add'l	Nonrecurring Disconnect First	Nonrecurring Disconnect Add'l	Svc Order Submitted Elec per LSR	Svc Order Submitted Manually per LSR	Incremental Charge - Manual Svc Order vs. Electronic-1st	Incremental Charge - Manual Svc Order vs. Electronic-Add'l	Incremental Charge - Manual Svc Order vs. Electronic-Disc 1st	Incremental Charge - Manual Svc Order vs. Electronic-Disc Add'l
											OSS Rates($)					
											SOMEC	SOMAN	SOMAN	SOMAN	SOMAN	SOMAN
	2-Wire ISDN Digital Grade Loop - UNE Zone 3		3	UEPPB UEPPR	USL2X	45.97							40.71	9.58		
	UNE Port Rate															
	Exchange Port - 2-Wire ISDN Line Side Port			UEPPB UEPPR	UEPPB	60.00	525.00	400.00					40.71	9.58		
	NONRECURRING CHARGES - CURRENTLY COMBINED															
	ADDITIONAL NRCs															
	LOCAL NUMBER PORTABILITY															
	Local Number Portability (1 per port)			UEPPB UEPPR	LNPCX	0.35	0.00	0.00								
	B-CHANNEL USER PROFILE ACCESS:															
	CVS/CSD (DMS/5ESS)			UEPPB UEPPR	U1UCA	0.00	0.00	0.00								
	CVS (EWSD)			UEPPB UEPPR	U1UCB	0.00	0.00	0.00								
	CSD			UEPPB UEPPR	U1UCC	0.00	0.00	0.00								
	B-CHANNEL AREA PLUS USER PROFILE ACCESS: (AL,KY,LA,MS SC,MS, & TN)															
	CVS/CSD (DMS/5ESS)			UEPPB UEPPR	U1UCD	0.00	0.00	0.00								
	CVS (EWSD)			UEPPB UEPPR	U1UCE	0.00	0.00	0.00								
	CSD			UEPPB UEPPR	U1UCF	0.00	0.00	0.00								
	USER TERMINAL PROFILE															
	User Terminal Profile (EWSD only)			UEPPB UEPPR	U1UMA	0.00	0.00	0.00								
	VERTICAL FEATURES															
	All Vertical Features - One per Channel B User Profile			UEPPB UEPPR	UEPVF	5.55	0.00	0.00					40.71	9.58		
	INTEROFFICE CHANNEL MILEAGE															
	Interoffice Channel mileage each, including first mile and facilities termination			UEPPB UEPPR	M1GNC	17.81	107.11	48.27					40.71	9.58		
	Interoffice Channel mileage each, additional mile			UEPPB UEPPR	M1GNM	0.0339	0.00	0.00								
	4-WIRE DS1 DIGITAL LOOP WITH 4-WIRE ISDN DS1 DIGITAL TRUNK PORT															
	UNE Port/Loop Combination Rates															
	4W DS1 Digital Loop/4W ISDN DS1 Digital Trunk Port - UNE Zone 1		1	UEPPP		951.92										
	4W DS1 Digital Loop/4W ISDN DS1 Digital Trunk Port - UNE Zone 2		2	UEPPP		1,027.63										
	4W DS1 Digital Loop/4W ISDN DS1 Digital Trunk Port - UNE Zone 3		3	UEPPP		1,179.04										
	UNE Loop Rates															
	4-Wire DS1 Digital Loop - UNE Zone 1		1	UEPPP	USL4P	101.92							40.71	9.58		
	4-Wire DS1 Digital Loop - UNE Zone 2		2	UEPPP	USL4P	177.63							40.71	9.58		
	4-Wire DS1 Digital Loop - UNE Zone 3		3	UEPPP	USL4P	329.04							40.71	9.58		
	UNE Port Rate															
	Exchange Ports - 4-Wire ISDN DS1 Port			UEPPP	UEPPP	850.00	1,150.00	1,150.00					40.71	9.58		
	NONRECURRING CHARGES - CURRENTLY COMBINED															
	ADDITIONAL NRCs															
	4-Wire DS1 Loop/4-W ISDN Digtl Trk Port - Subsqt Actvy-Inward/two way tel nos within Std Allowance (except NC)			UEPPP	PR7TF		0.9801									
	4-Wire DS1 Loop / 4-Wire ISDN DS1 Digital Trunk Port - Outward Tel Numbers (All States except NC)			UEPPP	PR7TO		23.02	23.02								
	4-Wire DS1 Loop / 4-Wire ISDN DS1 Digital Trk Port - Subsequent Inward Tel Nos Above Std Allowance			UEPPP	PR7ZT		46.05	46.05								
	LOCAL NUMBER PORTABILITY															
	Local Number Portability (1 per port)			UEPPP	LNPCN	1.75										
	INTERFACE (Provsioning Only)															
	Voice/Data			UEPPP	PR71V	0.00	0.00	0.00								
	Digital Data			UEPPP	PR71D	0.00	0.00	0.00								
	Inward Data			UEPPP	PR71E	0.00	0.00	0.00								
	New or Additional "B" Channel															
	New or Additional - Voice/Data B Channel			UEPPP	PR7BV	0.00	40.00									
	New or Additional - Digital Data B Channel			UEPPP	PR7BF	0.00	40.00									
	New or Additional Inward Data B Channel			UEPPP	PR7BD	0.00	40.00									
	CALL TYPES															
	Inward			UEPPP	PR7C1	0.00	0.00	0.00								
	Outward			UEPPP	PR7C0	0.00	0.00	0.00								
	Two-way			UEPPP	PR7CC	0.00	0.00	0.00								

UNBUNDLED NETWORK ELEMENTS - Alabama													Attachment: 2		Exhibit: B	
CATEGORY	RATE ELEMENTS	Interim	Zone	BCS	USOC	RATES($)					Svc Order Submitted Elec per LSR	Svc Order Submitted Manually per LSR	Incremental Charge - Manual Svc Order vs. Electronic-1st	Incremental Charge - Manual Svc Order vs. Electronic-Add'l	Incremental Charge - Manual Svc Order vs. Electronic-Disc 1st	Incremental Charge - Manual Svc Order vs. Electronic-Disc Add'l
						Rec	Nonrecurring		Nonrecurring Disconnect		OSS Rates($)					
							First	Add'l	First	Add'l	SOMEC	SOMAN	SOMAN	SOMAN	SOMAN	SOMAN
	Interoffice Channel Mileage															
	Fixed Each Including First Mile			UEPPP	1LN1A	80.382	198.15	148.18	25.44				40.71	9.58		
	Each Airline-Fractional Additional Mile			UEPPP	1LN1B	0.692										
	4-WIRE DS1 DIGITAL LOOP WITH 4-WIRE DDITS TRUNK PORT															
	UNE Port/Loop Combination Rates															
	4W DS1 Digital Loop/4W DDITS Trunk Port - Statewide		sw	UEPDC												
	4W DS1 Digital Loop/4W DDITS Trunk Port - UNE Zone 1		1	UEPDC		170.59										
	4W DS1 Digital Loop/4W DDITS Trunk Port - UNE Zone 2		2	UEPDC		246.30										
	4W DS1 Digital Loop/4W DDITS Trunk Port - UNE Zone 3		3	UEPDC		397.71										
	4W DS1 Digital Loop/4W DDITS Trunk Port - UNE Zone 4		4	UEPDC												
	UNE Loop Rates															
	4-Wire DS1 Digital Loop - Statewide		sw	UEPDC	USLDC											
	4-Wire DS1 Digital Loop - UNE Zone 1		1	UEPDC	USLDC	101.92							40.71	9.58		
	4-Wire DS1 Digital Loop - UNE Zone 2		2	UEPDC	USLDC	177.63							40.71	9.58		
	4-Wire DS1 Digital Loop - UNE Zone 3		3	UEPDC	USLDC	329.04							40.71	9.58		
	4-Wire DS1 Digital Loop - UNE Zone 4		4	UEPDC	USLDC											
	UNE Port Rate															
	4-Wire DDITS Digital Trunk Port			UEPDC	UDD1T	750.00	1,003.02	478.01	211.87	20.77			40.71	9.58		
	NONRECURRING CHARGES - CURRENTLY COMBINED															
	4-Wire DS1 Digital Loop / 4-Wire DDITS Trunk Port Combination - Switch-As-Is Top 8 MSAs only			UEPDC	USAC4		258.98	134.03					40.71	9.58		
	4-Wire DS1 Digital Loop / 4-Wire DDITS Trunk Port Combination - Conversion with DS1 Changes Top 8 MSAs only			UEPDC	USAWA		258.98	134.04					40.71	9.58		
	4-Wire DS1 Digital Loop / 4-Wire DDITS Trunk Port Combination - Conversion with Change - Trunk Top 8 MSAs only			UEPDC	USAWB		258.98	134.03					40.71	9.58		
	ADDITIONAL NRCs															
	4-Wire DS1 Loop / 4-Wire DDITS Trunk Port - Subsequent Service Activity Per Service Order			UEPDC	USAS4								40.71	9.58		
	4-Wire DS1 Loop / 4-Wire DDITS Trunk Port - NRC - Subsequent Channel Activation/Chan - 2-Way Trunk			UEPDC	UDTTA		28.85	28.95					40.71	9.58		
	4-Wire DS1 Loop / 4-Wire DDITS Trunk Port - Subsequent Channel Activation/Chan - 1-Way Outward Trunk			UEPDC	UDTTB		28.85	28.85					40.71	9.58		
	4-Wire DS1 Loop / 4-Wire DDITS Trunk Port - Subsqnt Channel Activation/Chan Inward Trunk w/out DID			UEPDC	UDTTC		28.85	28.85					40.71	9.58		
	4-Wire DS1 Loop / 4-Wire DDITS Trunk Port - Subsqnt Chan Activation Per Chan - Inward Trunk with DID			UEPDC	UDTTD		28.85	28.85					40.71	9.58		
	4-Wire DS1 Loop / 4-Wire DDITS Trunk Port - Subsqnt Chan Activation / Chan - 2-Way DID w User Trans			UEPDC	UDTTE		28.85	28.85					40.71	9.58		
	BIPOLAR 8 ZERO SUBSTITUTION															
	B8ZS -Superframe Format			UEPDC	CCOSF		0.00	600.00								
	B8ZS - Extended Superframe Format			UEPDC	CCOEF		0.00	600.00								
	Alternate Mark Inversion															
	AMI -Superframe Format			UEPDC	MCOSF		0.00	0.00								
	AMI - Extended SuperFrame Format			UEPDC	MCOPO		0.00	0.00								
	Telephone Number/Trunk Group Establisment Charges															
	Telephone Number for 2-Way Trunk Group			UEPDC	UDTGX	0.00										
	Telephone Number for 1-Way Outward Trunk Group			UEPDC	UDTGY	0.00										
	Telephone Number for 1-Way Inward Trunk Group Without DID			UEPDC	UDTGZ	0.00										
	DID Numbers, Establish Trunk Group and Provide First Group of 20 DID Numbers			UEPDC	NDZ	0.00	0.00	0.00								
	DID Numbers for each Group of 20 DID Numbers			UEPDC	ND4	0.00	0.00									
	DID Numbers, Non- consecutive DID Numbers , Per Number			UEPDC	ND5	0.00										
	Reserve Non-Consecutive DID Nos.			UEPDC	ND6	0.00	0.00	0.00								
	Reserve DID Numbers			UEPDC	NDV	0.00	0.00	0.00								
	Dedicated DS1 (Interoffice Channel Mileage) -															
	FX/FCO for 4-Wire DS1 Digital Loop with 4-Wire DDITS Trunk Port															

UNBUNDLED NETWORK ELEMENTS - Alabama													Attachment: 2		Exhibit: B	
CATEGORY	RATE ELEMENTS	Interim	Zone	BCS	USOC	RATES($)					Svc Order Submitted Elec per LSR	Svc Order Submitted Manually per LSR	Incremental Charge - Manual Svc Order vs. Electronic-1st	Incremental Charge - Manual Svc Order vs. Electronic-Add'l	Incremental Charge - Manual Svc Order vs. Electronic-Disc 1st	Incremental Charge - Manual Svc Order vs. Electronic-Disc Add'l
						Rec	Nonrecurring		Nonrecurring Disconnect		OSS Rates($)					
							First	Add'l	First	Add'l	SOMEC	SOMAN	SOMAN	SOMAN	SOMAN	SOMAN
	Interoffice Channel Mileage - Fixed rate 0-8 miles (Facilities Termination)			UEPDC	1LNO1	79.69	198.15	148.18	25.44	20.42			40.71	9.58		
	Interoffice Channel Mileage - Additional rate per mile - 0-8 miles			UEPDC	1LNOA	0.692	0.00	0.00								
	Interoffice Channel Mileage - Fixed rate 9-25 miles (Facilities Termination)			UEPDC	1LNO2	0.00	0.00	0.00								
	Interoffice Channel Mileage - Additional rate per mile - 9-25 miles			UEPDC	1LNOB	0.692	0.00	0.00								
	Interoffice Channel Mileage - Fixed rate 25+ miles (Facilities Termination)			UEPDC	1LNO3	0.00	0.00	0.00	0.00							
	Interoffice Channel Mileage - Additional rate per mile - 25+ miles			UEPDC	1LNOC	0.692	0.00	0.00								
	Local Number Portability, per DS0 Activated			UEPDC	LNPCP	3.15	0.00	0.00	0.00							
	Central Office Termininating Point			UEPDC	CTG	0.00										
	4-WIRE DS1 LOOP WITH CHANNELIZATION WITH PORT															
	System is 1 DS1 Loop, 1 D4 Channel Bank, and up to 24 Feature Activations															
	A system can have various rate combinations based on type and number of ports used															
	UNE DS1 Loop															
	4-Wire DS1 Loop - UNE Zone 1		1	UEPMG	USLDC	101.92	0.00	0.00								
	4-Wire DS1 Loop - UNE Zone 2		2	UEPMG	USLDC	177.63	0.00	0.00								
	4-Wire DS1 Loop - UNE Zone 3		3	UEPMG	USLDC	329.04	0.00	0.00								
	UNE DSO Channelization Capacities (D4 Channel Bank Configurations)															
	24 DSO Channel Capacity - 1 per DS1			UEPMG	VUM24	115.89	0.00	0.00					40.71	9.58		
	48 DSO Channel Capacity - 1 per 2 DS1s			UEPMG	VUM48	231.78	0.00	0.00					40.71	9.58		
	96 DSO Channel Capacity -1per 4 DS1s			UEPMG	VUM96	463.56	0.00	0.00					40.71	9.58		
	144 DS0 Channel Capacity - 1 per 6 DS1s			UEPMG	VUM14	695.34	0.00	0.00					40.71	9.58		
	192 DS0 Channel Capacity -1 per 8 DS1s			UEPMG	VUM19	980.00	0.00	0.00					40.71	9.58		
	240 DS0 Channel Capacity - 1 per 10 DS1s			UEPMG	VUM20	1,158.90	0.00	0.00					40.71	9.58		
	288 DS0 Channel Capacity - 1 per 12 DS1s			UEPMG	VUM28	1,390.68	0.00	0.00					40.71	9.58		
	384 DS0 Channel Capacity - 1 per 16 DS1s			UEPMG	VUM38	1,854.24	0.00	0.00					40.71	9.58		
	480 DS0 Channel Capacity - 1 per 20 DS1s			UEPMG	VUM40	2,317.80	0.00	0.00					40.71	9.58		
	576 DS0 Channel Capacity -1 per 24 DS1s			UEPMG	VUM57	2,781.36	0.00	0.00					40.71	9.58		
	672 DS0 Channel Capacity - 1 per 28 DS1s			UEPMG	VUM67	3,244.92	0.00	0.00					40.71	9.58		
	Non-Recurring Charges (NRC) Associated with 4-Wire DS1 Loop with Channeliztion with Port - Conversion Charge Based on a System															
	A Minimum System configuration is One (1) DS1, One (1) D4 Channel Bank, and Up To 24 DSO Ports with Feature Activations.															
	Multiples of this configuration functioning as one are considered Add'l after the minimum system configuration is counted.															
	System Additions Where Currently Combined and New (Not Currently Combined)															
	In Top 8 MSAs and AL, FL, and NC Only															
	1 DS1/D4 Channel Bank - Add NRC for each Port and Assoc Fea Activation -			UEPMG	VUMD4	0.00	716.11	468.04	148.75	17.65			40.71	9.58		
	Bipolar 8 Zero Substitution															
	Clear Channel Capability Format, superframe - Subsequent Activity Only			UEPMG	CCOSF	0.00	0.00	600.00								
	Clear Channel Capability Format - Extended Superframe - Subsequent Activity Only			UEPMG	CCOEF	0.00	0.00	600.00								
	Alternate Mark Inversion (AMI)															
	Superframe Format			UEPMG	MCOSF	0.00	0.00	0.00								
	Extended Superframe Format			UEPMG	MCOPO	0.00	0.00	0.00								
	Exchange Ports Associated with 4-Wire DS1 Loop with Channelization with Port															
	Exchange Ports															
	Line Side Combination Channelized PBX Trunk Port - Business			UEPPX	UEPCX	14.00	0.00	0.00	0.00	0.00			40.71	9.58		
	Line Side Outward Channelized PBX Trunk Port - Business			UEPPX	UEPOX	14.00	0.00	0.00	0.00	0.00			40.17	9.58		
	Line Side Inward Only Channelized PBX Trunk Port without DID			UEPPX	UEP1X	14.00	0.00	0.00	0.00	0.00			40.71	9.58		
	2-Wire Trunk Side Unbundled Channelized DID Trunk Port			UEPPX	UEPDM	40.00	0.00	0.00	0.00	0.00			40.71	9.58		
	2-Wire Channelized PBX Area Calling Service Combination Port (AL Only)			UEPPX	UEPA4	14.00	0.00	0.00					40.71	9.58		

UNBUNDLED NETWORK ELEMENTS - Alabama													Attachment: 2		Exhibit: B	
CATEGORY	RATE ELEMENTS	Interim	Zone	BCS	USOC	RATES($)					Svc Order Submitted Elec per LSR	Svc Order Submitted Manually per LSR	Incremental Charge - Manual Svc Order vs. Electronic-1st	Incremental Charge - Manual Svc Order vs. Electronic-Add'l	Incremental Charge - Manual Svc Order vs. Electronic-Disc 1st	Incremental Charge - Manual Svc Order vs. Electronic-Disc Add'l
						Rec	Nonrecurring		Nonrecurring Disconnect		OSS Rates($)					
							First	Add'l	First	Add'l	SOMEC	SOMAN	SOMAN	SOMAN	SOMAN	SOMAN
	2 Wire Channelized PBX Area Calling Service Outgoing Only Port (AL Only)			UEPPX	UEPA3	14.00	0.00	0.00					40.71	9.58		
Feature Activations - Unbundled Loop Concentration																
	Feature (Service) Activation for each Line Side Port Terminated in D4 Bank			UEPPX	1PQWM	0.62	40.00	20.00	6.00	5.00			40.71	9.58		
	Feature (Service) Activation for each Trunk Side Port Terminated in D4 Bank			UEPPX	1PQWU	0.62	110.00	30.00	65.00	20.00			40.17	9.58		
Telephone Number/ Group Establishment Charges for DID Service																
	DID Trunk Termination (1 per Port)			UEPPX	NDT	0.00	0.00	0.00								
	DID Numbers - groups of 20 - Valid all States			UEPPX	ND4	0.00	0.00	0.00								
	Non-Consecutive DID Numbers - per number			UEPPX	ND5	0.00	0.00	0.00								
	Reserve Non-Consecutive DID Numbers			UEPPX	ND6	0.00	0.00	0.00								
	Reserve DID Numbers			UEPPX	NDV	0.00	0.00	0.00								
Local Number Portability																
	Local Number Portability - 1 per port			UEPPX	LNPCP	3.15	0.00	0.00								
FEATURES - Vertical and Optional																
Local Switching Features Offered with Line Side Ports Only																
	All Features Available			UEPPX	UEPVF	5.55	0.00	0.00					40.71	9.58		
UNBUNDLED CENTREX PORT/LOOP COMBINATIONS - COST BASED RATES																
1. Cost Based Rates are applied where BellSouth is required by FCC and/or State Commission rule to provide Unbundled Local Switching or Switch Ports.																
2. Features shall apply to the Unbundled Port/Loop Combination - Cost Based Rate section in the same manner as they are applied to the Stand-Alone Unbundled Port section of this Rate Exhibit.																
3. End Office and Tandem Switching Usage and Common Transport Usage rates in the Port section of this rate exhibit shall apply to all combinations of loop/port network elements except for UNE Coin Port/Loop Combinations.																
4. For Georgia, Kentucky, Louisiana, Mississippi, South Carolina, and Tennessee, the recurring UNE Port and Loop charges listed apply to Currently Combined and Not Currently Combined Combos. The the first and additional Port nonrecurring charges apply to Not Currently Combined Combos for all states. In GA, KY, LA, MS, SC, and TN these nonrecurring charges are commission ordered cost based rates and in AL, FL, and NC these nonrecurring charges are Market Rates and are listed in the Market Rate section. For Currently Combined Combos in all other states, the nonrecurring charges shall be those identified in the Nonrecurring - Currently Combined sections.																
5. Market Rates for Unbundled Centrex Port/Loop Combination will be negotiated on an Individual Case Basis, until further notice.																
UNE-P CENTREX - 1AESS - (Valid in AL,FL,GA,KY,LA,MS,&TN only)																
2-Wire VG Loop/2-Wire Voice Grade Port (Centrex) Combo																
UNE Port/Loop Combination Rates (Non-Design)																
	2-Wire VG Loop/2-Wire Voice Grade Port (Centrex) Port Combo - Non-Design		1	UEP91		16.55										
	2-Wire VG Loop/2-Wire Voice Grade Port (Centrex)Port Combo - Non-Design		2	UEP91		25.51										
	2-Wire VG Loop/2-Wire Voice Grade Port (Centrex)Port Combo - Non-Design		3	UEP91		44.44										
UNE Port/Loop Combination Rates (Design)																
	2-Wire VG Loop/2-Wire Voice Grade Port (Centrex) Port Combo - Design		1	UEP91		22.62										
	2-Wire VG Loop/2-Wire Voice Grade Port (Centrex)Port Combo - Design		2	UEP91		29.61										
	2-Wire VG Loop/2-Wire Voice Grade Port (Centrex)Port Combo - Design		3	UEP91		38.09										
UNE Loop Rate																
	2-Wire Voice Grade Loop (SL 1) - Zone 1		1	UEP91	UECS1	14.35										
	2-Wire Voice Grade Loop (SL 1) - Zone 2		2	UEP91	UECS1	23.31										
	2-Wire Voice Grade Loop (SL 1) - Zone 3		3	UEP91	UECS1	42.24										
	2-Wire Voice Grade Loop (SL 2) - Zone 1		1	UEP91	UECS2	20.42										
	2-Wire Voice Grade Loop (SL 2) - Zone 2		2	UEP91	UECS2	27.41										
	2-Wire Voice Grade Loop (SL 2) - Zone 3		3	UEP91	UECS2	35.89										
UNE Ports																
All States (Except North Carolina and Sout Carolina)																
	2-Wire Voice Grade Port (Centrex) Basic Local Area			UEP91	UEPYA	2.20							40.71	9.58		
	2-Wire Voice Grade Port (Centrex 800 termination)Basic Local Area			UEP91	UEPYB	2.20							40.71	9.58		
	2-Wire Voice Grade Port (Centrex with Caller ID)1Basic Local Area			UEP91	UEPYH	2.20							40.71	9.58		
	2-Wire Voice Grade Port (Centrex from diff Serving Wire Center)2 Basic Local Area			UEP91	UEPYM	2.20							40.71	9.58		

UNBUNDLED NETWORK ELEMENTS - Alabama													Attachment: 2		Exhibit: B	
CATEGORY	RATE ELEMENTS	Interim	Zone	BCS	USOC	RATES($)					Svc Order Submitted Elec per LSR	Svc Order Submitted Manually per LSR	Incremental Charge - Manual Svc Order vs. Electronic-1st	Incremental Charge - Manual Svc Order vs. Electronic-Add'l	Incremental Charge - Manual Svc Order vs. Electronic-Disc 1st	Incremental Charge - Manual Svc Order vs. Electronic-Disc Add'l
						Rec	Nonrecurring		Nonrecurring Disconnect		OSS Rates($)					
							First	Add'l	First	Add'l	SOMEC	SOMAN	SOMAN	SOMAN	SOMAN	SOMAN
	2-Wire Voice Grade Port, Diff Serving Wire Center - 800 Service Term - Basic Local Area			UEP91	UEPYZ	2.20							40.71	9.58		
	2-Wire Voice Grade Port terminated in on Megalink or equivalent - Basic Local Area			UEP91	UEPY9	2.20							40.71	9.58		
	2-Wire Voice Grade Port Terminated on 800 Service Term - Basic Local Area			UEP91	UEPY2	2.20							40.71	9.58		
AL, KY, LA, MS, & TN Only																
	2-Wire Voice Grade Port (Centrex)			UEP91	UEPQA	2.20							40.71	9.58		
	2-Wire Voice Grade Port (Centrex 800 termination)			UEP91	UEPQB	2.20							40.71	9.58		
	2-Wire Voice Grade Port (Centrex with Caller ID)1			UEP91	UEPQH	2.20							40.71	9.58		
	2-Wire Voice Grade Port (Centrex from diff Serving Wire Center)2			UEP91	UEPQM	2.20							40.71	9.58		
	2-Wire Voice Grade Port, Diff Serving Wire Center - 800 Service Term			UEP91	UEPQZ	2.20							40.71	9.58		
	2-Wire Voice Grade Port terminated in on Megalink or equivalent			UEP91	UEPQ9	2.20							40.71	9.58		
	2-Wire Voice Grade Port Terminated on 800 Service Term			UEP91	UEPQ2	2.20							40.71	9.58		
Local Switching																
	Centrex Intercom Funtionality, per port			UEP91	URECS	0.5488										
Local Number Portability																
	Local Number Portability (1 per port)			UEP91	LNPCC	0.35										
Features																
	All Standard Features Offered, per port			UEP91	UEPVF	2.64										
	All Select Features Offered, per port			UEP91	UEPVS	0.00	405.52						40.71	9.58		
	All Centrex Control Features Offered, per port			UEP91	UEPVC	2.64										
NARS																
	Unbundled Network Access Register - Combination			UEP91	UARCX	0.00	0.00	0.00					40.71	9.58		
	Unbundled Network Access Register - Indial			UEP91	UAR1X	0.00	0.00	0.00					40.71	9.58		
	Unbundled Network Access Register - Outdial			UEP91	UAROX	0.00	0.00	0.00					40.71	9.58		
Miscellaneous Terminations																
2-Wire Trunk Side																
	Trunk Side Terminations, each			UEP91	CENA6	9.17										
Interoffice Channel Mileage - 2-Wire																
	Interoffice Channel Facilities Termination - Voice Grade			UEP91	MIGBC	24.15							40.71	9.58		
	Interoffice Channel mileage, per mile or fraction of mile			UEP91	MIGBM	0.0101							40.71	9.58		
Feature Activations (DS0) Centrex Loops on Channelized DS1 Service																
D4 Channel Bank Feature Activations																
	Feature Activation on D-4 Channel Bank Centrex Loop Slot			UEP91	1PQWS	0.64										
	Feature Activation on D-4 Channel Bank FX line Side Loop Slot			UEP91	1PQW6	0.64										
	Feature Activation on D-4 Channel Bank FX Trunk Side Loop Slot			UEP91	1PQW7	0.64										
	Feature Activation on D-4 Channel Bank Centrex Loop Slot - Different Wire Center			UEP91	1PQWP	0.64										
	Feature Activation on D-4 Channel Bank Private Line Loop Slot			UEP91	1PQWV	0.64										
	Feature Activation on D-4 Channel Bank Tjie Line/Trunk Loop Slot			UEP91	1PQWQ	0.64										
	Feature Activation on D-4 Channel Bank WATS Loop Slot			UEP91	1PQWA	0.64										
Non-Recurring Charges (NRC) Associated with UNE-P Centrex																
	Conversion - Currently Combined Switch-As-Is with allowed changes, per port			UEP91	USAC2		2.80	0.41					40.71	9.58		
	New Centrex Standard Common Block			UEP91	M1ACS	0.00	667.21						40.71	9.58		
	New Centrex Customized Common Block			UEP91	M1ACC	0.00	667.21						40.71	9.58		
	Secondary Block, per Block			UEP91	M2CC1	0.00	78.02						40.71	9.58		
	NAR Establishment Charge, Per Occasion			UEP91	URECA	0.00	72.73						40.71	9.58		
UNE-P CENTREX - 5ESS (Valid in All States)																
2-Wire VG Loop/2-Wire Voice Grade Port (Centrex) Combo																
UNE Port/Loop Combination Rates (Non-Design)																

CATEGORY	RATE ELEMENTS	Interim	Zone	BCS	USOC	RATES($) Rec	Nonrecurring First	Nonrecurring Add'l	Nonrecurring Disconnect First	Nonrecurring Disconnect Add'l	Svc Order Submitted Elec per LSR	Svc Order Submitted Manually per LSR	Incremental Charge - Manual Svc Order vs. Electronic-1st	Incremental Charge - Manual Svc Order vs. Electronic-Add'l	Incremental Charge - Manual Svc Order vs. Electronic-Disc 1st	Incremental Charge - Manual Svc Order vs. Electronic-Disc Add'l
											OSS Rates($)					
											SOMEC	SOMAN	SOMAN	SOMAN	SOMAN	SOMAN
	2-Wire VG Loop/2-Wire Voice Grade Port (Centrex) Port Combo - Non-Design		1	UEP95		16.55										
	2-Wire VG Loop/2-Wire Voice Grade Port (Centrex)Port Combo - Non-Design		2	UEP95		25.51										
	2-Wire VG Loop/2-Wire Voice Grade Port (Centrex)Port Combo - Non-Design		3	UEP95		44.44										
UNE Port/Loop Combination Rates (Design)																
	2-Wire VG Loop/2-Wire Voice Grade Port (Centrex) Port Combo - Design		1	UEP95		22.62										
	2-Wire VG Loop/2-Wire Voice Grade Port (Centrex)Port Combo - Design		2	UEP95		29.61										
	2-Wire VG Loop/2-Wire Voice Grade Port (Centrex)Port Combo - Design		3	UEP95		38.09										
UNE Loop Rate																
	2-Wire Voice Grade Loop (SL 1) - Zone 1		1	UEP95	UECS1	14.35										
	2-Wire Voice Grade Loop (SL 1) - Zone 2		2	UEP95	UECS1	23.31										
	2-Wire Voice Grade Loop (SL 1) - Zone 3		3	UEP95	UECS1	42.24										
	2-Wire Voice Grade Loop (SL 2) - Zone 1		1	UEP95	UECS2	20.42										
	2-Wire Voice Grade Loop (SL 2) - Zone 2		2	UEP95	UECS2	27.41										
	2-Wire Voice Grade Loop (SL 2) - Zone 3		3	UEP95	UECS2	35.89										
UNE Port Rate																
All States																
	2-Wire Voice Grade Port (Centrex) Basic Local Area			UEP95	UEPYA	2.20							40.71	9.58		
	2-Wire Voice Grade Port (Centrex 800 termination)			UEP95	UEPYB	2.20							40.71	9.58		
	2-Wire Voice Grade Port (Centrex with Caller ID)1Basic Local Area			UEP95	UEPYH	2.20							40.71	9.58		
	2-Wire Voice Grade Port (Centrex from diff Serving Wire Center)2 Basic Local Area			UEP95	UEPYM	2.20							40.71	9.58		
	2-Wire Voice Grade Port, Diff Serving Wire Center - 800 Service Term - Basic Local Area			UEP95	UEPYZ	2.20							40.71	9.58		
	2-Wire Voice Grade Port terminated in on Megalink or equivalent - Basic Local Area			UEP95	UEPY9	2.20							40.71	9.58		
	2-Wire Voice Grade Port Terminated on 800 Service Term - Basic Local Area			UEP95	UEPY2	2.20							40.71	9.58		
AL, KY, LA, MS, SC, & TN Only																
	2-Wire Voice Grade Port (Centrex)			UEP95	UEPQA	2.20							40.71	9.58		
	2-Wire Voice Grade Port (Centrex 800 termination)			UEP95	UEPQB	2.20							40.71	9.58		
	2-Wire Voice Grade Port (Centrex with Caller ID)1			UEP95	UEPQH	2.20							40.71	9.58		
	2-Wire Voice Grade Port (Centrex from diff Serving Wire Center)2			UEP95	UEPQM	2.20							40.71	9.58		
	2-Wire Voice Grade Port, Diff Serving Wire Center - 800 Service Term			UEP95	UEPQZ	2.20							40.71	9.58		
	2-Wire Voice Grade Port terminated in on Megalink or equivalent			UEP95	UEPQ9	2.20							40.71	9.58		
	2-Wire Voice Grade Port Terminated on 800 Service Term			UEP95	UEPQ2	2.20							40.71	9.58		
Local Switching																
	Centrex Intercom Funtionality, per port			UEP95	URECS	0.5488										
Local Number Portability																
	Local Number Portability (1 per port)			UEP95	LNPCC	0.35										
Features																
	All Standard Features Offered, per port			UEP95	UEPVF	2.64										
	All Select Features Offered, per port			UEP95	UEPVS	0.00	405.52							40.71	9.58	
	All Centrex Control Features Offered, per port			UEP95	UEPVC	2.64										
NARS																
	Unbundled Network Access Register - Combination			UEP95	UARCX	0.00	0.00	0.00						40.71	9.58	
	Unbundled Network Access Register - Indial			UEP95	UAR1X	0.00	0.00	0.00						40.71	9.58	
	Unbundled Network Access Register - Outdial			UEP95	UAROX	0.00	0.00	0.00						40.71	9.58	
Miscellaneous Terminations																
2-Wire Trunk Side																

CATEGORY	RATE ELEMENTS	Interim	Zone	BCS	USOC	RATES($) Rec	Nonrecurring First	Nonrecurring Add'l	Nonrecurring Disconnect First	Nonrecurring Disconnect Add'l	Svc Order Submitted Elec per LSR	Svc Order Submitted Manually per LSR	Incremental Charge - Manual Svc Order vs. Electronic-1st	Incremental Charge - Manual Svc Order vs. Electronic-Add'l	Incremental Charge - Manual Svc Order vs. Electronic-Disc 1st	Incremental Charge - Manual Svc Order vs. Electronic-Disc Add'l
											OSS Rates($)					
											SOMEC	SOMAN	SOMAN	SOMAN	SOMAN	SOMAN
	Trunk Side Terminations, each			UEP95	CEND6	9.17										
	4-Wire Digital (1.544 Megabits)															
	DS1 Circuit Terminations, each			UEP95	M1HD1	68.67										
	DS0 Channels Activated, each			UEP95	M1HDO	0.00	28.25							40.71	9.58	
	Interoffice Channel Mileage - 2-Wire															
	Interoffice Channel Facilities Termination			UEP95	MIGBC	24.15										
	Interoffice Channel mileage, per mile or fraction of mile			UEP95	MIGBM	0.0101										
	Feature Activations (DS0) Centrex Loops on Channelized DS1 Service															
	D4 Channel Bank Feature Activations															
	Feature Activation on D-4 Channel Bank Centrex Loop Slot			UEP95	1PQWS	0.64										
	Feature Activation on D-4 Channel Bank FX line Side Loop Slot			UEP95	1PQW6	0.64										
	Feature Activation on D-4 Channel Bank FX Trunk Side Loop Slot			UEP95	1PQW7	0.64										
	Feature Activation on D-4 Channel Bank Centrex Loop Slot - Different Wire Center			UEP95	1PQWP	0.64										
	Feature Activation on D-4 Channel Bank Private Line Loop Slot			UEP95	1PQWV	0.64										
	Feature Activation on D-4 Channel Bank Tjie Line/Trunk Loop Slot			UEP95	1PQWQ	0.64										
	Feature Activation on D-4 Channel Bank WATS Loop Slot			UEP95	1PQWA	0.64										
	Non-Recurring Charges (NRC) Associated with UNE-P Centrex															
	NRC Conversion Currently Combined Switch-As-Is with allowed changes, per port			UEP95	USAC2		2.80	0.41					40.71	9.58		
	New Centrex Standard Common Block			UEP95	M1ACS	0.00	667.21						40.71	9.58		
	New Centrex Customized Common Block			UEP95	M1ACC	0.00	667.21						40.71	9.58		
	NAR Establishment Charge, Per Occasion			UEP95	URECA	0.00	72.73						40.71	9.58		
	UNE-P CENTREX - DMS100 (Valid in All States)															
	2-Wire VG Loop/2-Wire Voice Grade Port (Centrex) Combo															
	UNE Port/Loop Combination Rates (Non-Design)															
	2-Wire VG Loop/2-Wire Voice Grade Port (Centrex) Port Combo - Non-Design		1	UEP9D		16.55										
	2-Wire VG Loop/2-Wire Voice Grade Port (Centrex)Port Combo - Non-Design		2	UEP9D		25.51										
	2-Wire VG Loop/2-Wire Voice Grade Port (Centrex)Port Combo - Non-Design		3	UEP9D		44.44										
	UNE Port/Loop Combination Rates (Design)															
	2-Wire VG Loop/2-Wire Voice Grade Port (Centrex) Port Combo - Design		1	UEP9D		22.62										
	2-Wire VG Loop/2-Wire Voice Grade Port (Centrex)Port Combo - Design		2	UEP9D		29.61										
	2-Wire VG Loop/2-Wire Voice Grade Port (Centrex)Port Combo - Design		3	UEP9D		38.09										
	UNE Loop Rate															
	2-Wire Voice Grade Loop (SL 1) - Zone 1		1	UEP9D	UECS1	14.35										
	2-Wire Voice Grade Loop (SL 1) - Zone 2		2	UEP9D	UECS1	23.31										
	2-Wire Voice Grade Loop (SL 1) - Zone 3		3	UEP9D	UECS1	42.24										
	2-Wire Voice Grade Loop (SL 2) - Zone 1		1	UEP9D	UECS2	20.42										
	2-Wire Voice Grade Loop (SL 2) - Zone 2		2	UEP9D	UECS2	27.41										
	2-Wire Voice Grade Loop (SL 2) - Zone 3		3	UEP9D	UECS2	35.89										
	UNE Port Rate															
	ALL STATES															
	2-Wire Voice Grade Port (Centrex) Basic Local Area			UEP9D	UEPYA	2.20							40.71	9.58		
	2-Wire Voice Grade Port (Centrex 800 termination)Basic Local Area			UEP9D	UEPYB	2.20							40.71	9.58		
	2-Wire Voice Grade Port (Centrex / EBS-PSET)3Basic Local Area			UEP9D	UEPYC	2.20							40.71	9.58		
	2-Wire Voice Grade Port (Centrex / EBS-M5009)3Basic Local Area			UEP9D	UEPYD	2.20							40.71	9.58		

CATEGORY		RATE ELEMENTS	Interim	Zone	BCS	USOC	RATES($)					Svc Order Submitted Elec per LSR	Svc Order Submitted Manually per LSR	Incremental Charge - Manual Svc Order vs. Electronic-1st	Incremental Charge - Manual Svc Order vs. Electronic-Add'l	Incremental Charge - Manual Svc Order vs. Electronic-Disc 1st	Incremental Charge - Manual Svc Order vs. Electronic-Disc Add'l
							Rec	Nonrecurring		Nonrecurring Disconnect		OSS Rates($)					
								First	Add'l	First	Add'l	SOMEC	SOMAN	SOMAN	SOMAN	SOMAN	SOMAN
		2-Wire Voice Grade Port (Centrex / EBS-M5209))3 Basic Local Area			UEP9D	UEPYE	2.20							40.71	9.58		
		2-Wire Voice Grade Port (Centrex / EBS-M5112))3 Basic Local Area			UEP9D	UEPYF	2.20							40.71	9.58		
		2-Wire Voice Grade Port (Centrex / EBS-M5312))3Basic Local Area			UEP9D	UEPYG	2.20							40.71	9.58		
		2-Wire Voice Grade Port (Centrex / EBS-M5008))3 Basic Local Area			UEP9D	UEPYT	2.20							40.71	9.58		
		2-Wire Voice Grade Port (Centrex / EBS-M5208))3 Basic Local Area			UEP9D	UEPYU	2.20							40.71	9.58		
		2-Wire Voice Grade Port (Centrex / EBS-M5216))3 Basic Local Area			UEP9D	UEPYV	2.20							40.71	9.58		
		2-Wire Voice Grade Port (Centrex / EBS-M5316))3 Basic Local Area			UEP9D	UEPY3	2.20							40.71	9.58		
		2-Wire Voice Grade Port (Centrex with Caller ID) Basic Local Area			UEP9D	UEPYH	2.20							40.71	9.58		
		2-Wire Voice Grade Port (Centrex/Caller ID/Msg Wtg Lamp Indication))3 Basic Local Area			UEP9D	UEPYW	2.20							40.71	9.58		
		2-Wire Voice Grade Port (Centrex/Msg Wtg Lamp Indication))3 Basic Local Area			UEP9D	UEPYJ	2.20							40.71	9.58		
		2-Wire Voice Grade Port (Centrex from diff Serving Wire Center) 2 Basic Local Area			UEP9D	UEPYM	2.20							40.71	9.58		
		2-Wire Voice Grade Port (Centrex/differ SWC /EBS-PSET)2, 3 Basic Local Area			UEP9D	UEPYO	2.20							40.71	9.58		
		2-Wire Voice Grade Port (Centrex/differ SWC /EBS-M5009)2, 3 Basic Local Area			UEP9D	UEPYP	2.20							40.71	9.58		
		2-Wire Voice Grade Port (Centrex/differ SWC /EBS-5209)2, 3 Basic Local Area			UEP9D	UEPYQ	2.20							40.71	9.58		
		2-Wire Voice Grade Port (Centrex/differ SWC /EBS-M5112)2, 3 Basic Local Area			UEP9D	UEPYR	2.20							40.71	9.58		
		2-Wire Voice Grade Port (Centrex/differ SWC /EBS-M5312)2, 3 Basic Local Area			UEP9D	UEPYS	2.20							40.71	9.58		
		2-Wire Voice Grade Port (Centrex/differ SWC /EBS-M5008)2, 3 Basic Local Area			UEP9D	UEPY4	2.20							40.71	9.58		
		2-Wire Voice Grade Port (Centrex/differ SWC /EBS-M5208)2, 3 Basic Local Area			UEP9D	UEPY5	2.20							40.71	9.58		
		2-Wire Voice Grade Port (Centrex/differ SWC /EBS-M5216)2, 3 Basic Local Area			UEP9D	UEPY6	2.20							40.71	9.58		
		2-Wire Voice Grade Port (Centrex/differ SWC /EBS-M5316)2, 3 Basic Local Area			UEP9D	UEPY7	2.20							40.71	9.58		
		2-Wire Voice Grade Port, Diff Serving Wire Center - 800 Service Term			UEP9D	UEPYZ	2.20							40.71	9.58		
		2-Wire Voice Grade Port terminated in on Megalink or equivalent Basic Local Area			UEP9D	UEPY9	2.20							40.71	9.58		
		2-Wire Voice Grade Port Terminated on 800 Service Term Basic Local Area			UEP9D	UEPY2	2.20							40.71	9.58		
	AL, KY, LA, MS, SC, & TN Only																
		2-Wire Voice Grade Port (Centrex)			UEP9D	UEPQA	2.20							40.71	9.58		
		2-Wire Voice Grade Port (Centrex 800 termination)			UEP9D	UEPQB	2.20							40.71	9.58		
		2-Wire Voice Grade Port (Centrex / EBS-PSET)3			UEP9D	UEPQC	2.20							40.71	9.58		
		2-Wire Voice Grade Port (Centrex / EBS-M5009)3			UEP9D	UEPQD	2.20							40.71	9.58		
		2-Wire Voice Grade Port (Centrex / EBS-M5209)3			UEP9D	UEPQE	2.20							40.71	9.58		
		2-Wire Voice Grade Port (Centrex / EBS-M5112)3			UEP9D	UEPQF	2.20							40.71	9.58		
		2-Wire Voice Grade Port (Centrex / EBS-M5312)3			UEP9D	UEPQG	2.20							40.71	9.58		
		2-Wire Voice Grade Port (Centrex / EBS-M5008)3			UEP9D	UEPQT	2.20							40.71	9.58		
		2-Wire Voice Grade Port (Centrex / EBS-M5208)3			UEP9D	UEPQU	2.20							40.71	9.58		
		2-Wire Voice Grade Port (Centrex / EBS-M5216)3			UEP9D	UEPQV	2.20							40.71	9.58		
		2-Wire Voice Grade Port (Centrex / EBS-M5316)3			UEP9D	UEPQ3	2.20							40.71	9.58		
		2-Wire Voice Grade Port (Centrex with Caller ID)			UEP9D	UEPQH	2.20							40.71	9.58		

UNBUNDLED NETWORK ELEMENTS - Alabama														Attachment: 2		Exhibit: B	
CATEGORY		RATE ELEMENTS	Interim	Zone	BCS	USOC	RATES($)					Svc Order Submitted Elec per LSR	Svc Order Submitted Manually per LSR	Incremental Charge - Manual Svc Order vs. Electronic-1st	Incremental Charge - Manual Svc Order vs. Electronic-Add'l	Incremental Charge - Manual Svc Order vs. Electronic-Disc 1st	Incremental Charge - Manual Svc Order vs. Electronic-Disc Add'l
							Rec	Nonrecurring		Nonrecurring Disconnect		OSS Rates($)					
								First	Add'l	First	Add'l	SOMEC	SOMAN	SOMAN	SOMAN	SOMAN	SOMAN
		2-Wire Voice Grade Port (Centrex/Caller ID/Msg Wtg Lamp Indication)3			UEP9D	UEPQW	2.20							40.71	9.58		
		2-Wire Voice Grade Port (Centrex/Msg Wtg Lamp Indication)3			UEP9D	UEPQJ	2.20							40.71	9.58		
		2-Wire Voice Grade Port (Centrex from diff Serving Wire Center) 2			UEP9D	UEPQM	2.20							40.71	9.58		
		2-Wire Voice Grade Port (Centrex/differ SWC /EBS-PSET)2, 3			UEP9D	UEPQO	2.20							40.71	9.58		
		2-Wire Voice Grade Port (Centrex/differ SWC /EBS-M5009)2, 3			UEP9D	UEPQP	2.20							40.71	9.58		
		2-Wire Voice Grade Port (Centrex/differ SWC /EBS-5209)2, 3			UEP9D	UEPQQ	2.20							40.71	9.58		
		2-Wire Voice Grade Port (Centrex/differ SWC /EBS-M5112)2, 3			UEP9D	UEPQR	2.20							40.71	9.58		
		2-Wire Voice Grade Port (Centrex/differ SWC /EBS-M5312)2, 3			UEP9D	UEPQS	2.20							40.71	9.58		
		2-Wire Voice Grade Port (Centrex/differ SWC /EBS-M5008)2, 3			UEP9D	UEPQ4	2.20							40.71	9.58		
		2-Wire Voice Grade Port (Centrex/differ SWC /EBS-M5208)2, 3			UEP9D	UEPQ5	2.20							40.71	9.58		
		2-Wire Voice Grade Port (Centrex/differ SWC /EBS-M5216)2, 3			UEP9D	UEPQ6	2.20							40.71	9.58		
		2-Wire Voice Grade Port (Centrex/differ SWC /EBS-M5316)2, 3			UEP9D	UEPQ7	2.20							40.71	9.58		
		2-Wire Voice Grade Port, Diff Serving Wire Center - 800 Service Term			UEP9D	UEPQZ	2.20							40.71	9.58		
		2-Wire Voice Grade Port terminated in on Megalink or equivalent			UEP9D	UEPQ9	2.20							40.71	9.58		
		2-Wire Voice Grade Port Terminated on 800 Service Term			UEP9D	UEPQ2	2.20							40.71	9.58		
	Local Switching																
		Centrex Intercom Funtionality, per port			UEP9D	URECS	0.5488										
	Local Number Portability																
		Local Number Portability (1 per port)			UEP9D	LNPCC	0.35										
	Features																
		All Standard Features Offered, per port			UEP9D	UEPVF	2.64										
		All Select Features Offered, per port			UEP9D	UEPVS	0.00	405.52									
		All Centrex Control Features Offered, per port			UEP9D	UEPVC	2.64										
	NARS																
		Unbundled Network Access Register - Combination			UEP9D	UARCX	0.00	0.00	0.00					40.71	9.58		
		Unbundled Network Access Register - Inward			UEP9D	UAR1X	0.00	0.00	0.00					40.71	9.58		
		Unbundled Network Access Register - Outdial			UEP9D	UAROX	0.00	0.00	0.00					40.71	9.58		
	Miscellaneous Terminations																
	2-Wire Trunk Side																
		Trunk Side Terminations, each			UEP9D	CEND6	9.17										
	4-Wire Digital (1.544 Megabits)																
		DS1 Circuit Terminations, each			UEP9D	M1HD1	68.67										
		DS0 Channels Activiated per Channel			UEP9D	M1HDO	0.00	28.25						40.71	9.58		
	Interoffice Channel Mileage - 2-Wire																
		Interoffice Channel Facilities Termination			UEP9D	MIGBC	24.15										
		Interoffice Channel mileage, per mile or fraction of mile			UEP9D	MIGBM	0.0101										
	Feature Activations (DS0) Centrex Loops on Channelized DS1 Service																
	D4 Channel Bank Feature Activations																
		Feature Activation on D-4 Channel Bank Centrex Loop Slot			UEP9D	1PQWS	0.64										
		Feature Activation on D-4 Channel Bank FX line Side Loop Slot			UEP9D	1PQW6	0.64										
		Feature Activation on D-4 Channel Bank FX Trunk Side Loop Slot			UEP9D	1PQW7	0.64										
		Feature Activation on D-4 Channel Bank Centrex Loop Slot - Different Wire Center			UEP9D	1PQWP	0.64										
		Feature Activation on D-4 Channel Bank Private Line Loop Slot			UEP9D	1PQWV	0.64										

CATEGORY	RATE ELEMENTS	Interim	Zone	BCS	USOC	RATES($) Rec	Nonrecurring First	Nonrecurring Add'l	Nonrecurring Disconnect First	Nonrecurring Disconnect Add'l	Svc Order Submitted Elec per LSR	Svc Order Submitted Manually per LSR	Incremental Charge - Manual Svc Order vs. Electronic-1st	Incremental Charge - Manual Svc Order vs. Electronic-Add'l	Incremental Charge - Manual Svc Order vs. Electronic-Disc 1st	Incremental Charge - Manual Svc Order vs. Electronic-Disc Add'l
											OSS Rates($)					
							First	Add'l	First	Add'l	SOMEC	SOMAN	SOMAN	SOMAN	SOMAN	SOMAN
	Feature Activation on D-4 Channel Bank Tjie Line/Trunk Loop Slot			UEP9D	1PQWQ	0.64										
	Feature Activation on D-4 Channel Bank WATS Loop Slot			UEP9D	1PQWA	0.64										
Non-Recurring Charges (NRC) Associated with UNE-P Centrex																
	NRC Conversion Currently Combined Switch-As-Is with allowed changes, per port			UEP9D	USAC2		2.80	0.41					40.71	9.58		
	New Centrex Standard Common Block			UEP9D	M1ACS	0.00	667.21						40.71	9.58		
	New Centrex Customized Common Block			UEP9D	M1ACC	0.00	667.21						40.71	9.58		
	NAR Establishment Charge, Per Occasion			UEP9D	URECA	0.00	72.73						40.71	9.58		
UNE-P CENTREX - EWSD (Valid in AL, FL, KY, LA, MS & TN)																
2-Wire VG Loop/2-Wire Voice Grade Port (Centrex) Combo																
UNE Port/Loop Combination Rates (Non-Design)																
	2-Wire VG Loop/2-Wire Voice Grade Port (Centrex) Port Combo - Non-Design		1	UEP9E		16.55										
	2-Wire VG Loop/2-Wire Voice Grade Port (Centrex)Port Combo - Non-Design		2	UEP9E		25.51										
	2-Wire VG Loop/2-Wire Voice Grade Port (Centrex)Port Combo - Non-Design		3	UEP9E		44.44										
UNE Port/Loop Combination Rates (Design)																
	2-Wire VG Loop/2-Wire Voice Grade Port (Centrex) Port Combo - Design		1	UEP9E		22.62										
	2-Wire VG Loop/2-Wire Voice Grade Port (Centrex)Port Combo - Design		2	UEP9E		29.61										
	2-Wire VG Loop/2-Wire Voice Grade Port (Centrex)Port Combo - Design		3	UEP9E		38.09										
UNE Loop Rate																
	2-Wire Voice Grade Loop (SL 1) - Zone 1		1	UEP9E	UECS1	14.35										
	2-Wire Voice Grade Loop (SL 1) - Zone 2		2	UEP9E	UECS1	23.31										
	2-Wire Voice Grade Loop (SL 1) - Zone 3		3	UEP9E	UECS1	42.24										
	2-Wire Voice Grade Loop (SL 2) - Zone 1		1	UEP9E	UECS2	20.42										
	2-Wire Voice Grade Loop (SL 2) - Zone 2		2	UEP9E	UECS2	27.41										
	2-Wire Voice Grade Loop (SL 2) - Zone 3		3	UEP9E	UECS2	35.89										
UNE Port Rate																
AL, FL, KY, LA, MS, & TN only																
	2-Wire Voice Grade Port (Centrex) Basic Local Area			UEP9E	UEPYA	2.20							40.71	9.58		
	2-Wire Voice Grade Port (Centrex 800 termination)Basic Local Area			UEP9E	UEPYB	2.20							40.71	9.58		
	2-Wire Voice Grade Port (Centrex with Caller ID)1Basic Local Area			UEP9E	UEPYH	2.20							40.71	9.58		
	2-Wire Voice Grade Port (Centrex from diff Serving Wire Center)2 Basic Local Area			UEP9E	UEPYM	2.20							40.71	9.58		
	2-Wire Voice Grade Port, Diff Serving Wire Center - 800 Service Term - Basic Local Area			UEP9E	UEPYZ	2.20							40.71	9.58		
	2-Wire Voice Grade Port terminated in on Megalink or equivalent - Basic Local Area			UEP9E	UEPY9	2.20							40.71	9.58		
	2-Wire Voice Grade Port Terminated on 800 Service Term - Basic Local Area			UEP9E	UEPY2	2.20							40.71	9.58		
AL, KY, LA, MS, & TN Only																
	2-Wire Voice Grade Port (Centrex)			UEP9E	UEPQA	2.20							40.71	9.58		
	2-Wire Voice Grade Port (Centrex 800 termination)			UEP9E	UEPQB	2.20							40.71	9.58		
	2-Wire Voice Grade Port (Centrex with Caller ID)1			UEP9E	UEPQH	2.20							40.71	9.58		
	2-Wire Voice Grade Port (Centrex from diff Serving Wire Center)2			UEP9E	UEPQM	2.20							40.71	9.58		
	2-Wire Voice Grade Port, Diff Serving Wire Center - 800 Service Term			UEP9E	UEPQZ	2.20							40.71	9.58		
	2-Wire Voice Grade Port terminated in on Megalink or equivalent			UEP9E	UEPQ9	2.20							40.71	9.58		
	2-Wire Voice Grade Port Terminated on 800 Service Term			UEP9E	UEPQ2	2.20							40.71	9.58		
Local Switching																

CATEGORY	RATE ELEMENTS	Interim	Zone	BCS	USOC	RATES($) Rec	Nonrecurring First	Nonrecurring Add'l	Nonrecurring Disconnect First	Nonrecurring Disconnect Add'l	Svc Order Submitted Elec per LSR	Svc Order Submitted Manually per LSR	Incremental Charge - Manual Svc Order vs. Electronic-1st	Incremental Charge - Manual Svc Order vs. Electronic-Add'l	Incremental Charge - Manual Svc Order vs. Electronic-Disc 1st	Incremental Charge - Manual Svc Order vs. Electronic-Disc Add'l
											OSS Rates($)					
											SOMEC	SOMAN	SOMAN	SOMAN	SOMAN	SOMAN
	Centrex Intercom Funtionality, per port			UEP9E	URECS	0.5488										
	Local Number Portability															
	Local Number Portability (1 per port)			UEP9E	LNPCC	0.35										
	Features															
	All Standard Features Offered, per port			UEP9E	UEPVF	2.64										
	All Select Features Offered, per port			UEP9E	UEPVS	0.00	405.52						40.71	9.58		
	All Centrex Control Features Offered, per port			UEP9E	UEPVC	2.64										
	NARS															
	Unbundled Network Access Register - Combination			UEP9E	UARCX	0.00	0.00	0.00					40.71	9.58		
	Unbundled Network Access Register - Indial			UEP9E	UAR1X	0.00	0.00	0.00					40.71	9.58		
	Unbundled Network Access Register - Outdial			UEP9E	UAROX	0.00	0.00	0.00					40.71	9.58		
	Miscellaneous Terminations															
	2-Wire Trunk Side															
	Trunk Side Terminations, each			UEP9E	CEND6	9.17										
	4-Wire Digital (1.544 Megabits)															
	DS1 Circuit Terminations, each			UEP9E	M1HD1	68.67										
	DS0 Channel Activated Per Channel			UEP9E	M1HDO	0.00	28.25						40.71	9.58		
	Interoffice Channel Mileage - 2-Wire															
	Interoffice Channel Facilities Termination			UEP9E	MIGBC	24.15										
	Interoffice Channel mileage, per mile or fraction of mile			UEP9E	MIGBM	0.0101										
	Feature Activations (DS0) Centrex Loops on Channelized DS1 Service															
	D4 Channel Bank Feature Activations															
	Feature Activation on D-4 Channel Bank Centrex Loop Slot			UEP9E	1PQWS	0.64										
	Feature Activation on D-4 Channel Bank FX line Side Loop Slot			UEP9E	1PQW6	0.64										
	Feature Activation on D-4 Channel Bank FX Trunk Side Loop Slot			UEP9E	1PQW7	0.64										
	Feature Activation on D-4 Channel Bank Centrex Loop Slot - Different Wire Center			UEP9E	1PQWP	0.64										
	Feature Activation on D-4 Channel Bank Private Line Loop Slot			UEP9E	1PQWV	0.64										
	Feature Activation on D-4 Channel Bank Tjie Line/Trunk Loop Slot			UEP9E	1PQWQ	0.64										
	Feature Activation on D-4 Channel Bank WATS Loop Slot			UEP9E	1PQWA	0.64										
	Non-Recurring Charges (NRC) Associated with UNE-P Centrex															
	NRC Conversion Currently Combined Switch-As-Is with allowed changes, per port			UEP9E	USAC2		2.80	0.41					40.71	9.58		
	New Centrex Standard Common Block			UEP9E	M1ACS	0.00	667.21						40.71	9.58		
	New Centrex Customized Common Block			UEP9E	M1ACC	0.00	667.21						40.71	9.58		
	NAR Establishment Charge, Per Occasion			UEP9E	URECA	0.00	72.73						40.71	9.58		
	UNE-P CENTREX - DCO - Valid in AL, KY, LA, MS, & TN)															
	2-Wire VG Loop/2-Wire Voice Grade Port (Centrex) Combo															
	UNE Port/Loop Combination Rates (Non-Design)															
	2-Wire VG Loop/2-Wire Voice Grade Port (Centrex) Port Combo - Non-Design		1	UEP93		16.55										
	2-Wire VG Loop/2-Wire Voice Grade Port (Centrex)Port Combo - Non-Design		2	UEP93		25.51										
	2-Wire VG Loop/2-Wire Voice Grade Port (Centrex)Port Combo - Non-Design		3	UEP93		44.44										
	UNE Port/Loop Combination Rates (Design)															
	2-Wire VG Loop/2-Wire Voice Grade Port (Centrex) Port Combo - Design		1	UEP93		22.62										
	2-Wire VG Loop/2-Wire Voice Grade Port (Centrex)Port Combo - Design		2	UEP93		29.61										
	2-Wire VG Loop/2-Wire Voice Grade Port (Centrex)Port Combo - Design		3	UEP93		38.09										
	UNE Loop Rate															
	2-Wire Voice Grade Loop (SL 1) - Zone 1		1	UEP93	UECS1	14.35										
	2-Wire Voice Grade Loop (SL 1) - Zone 2		2	UEP93	UECS1	23.31										

UNBUNDLED NETWORK ELEMENTS - Alabama														Attachment: 2		Exhibit: B	
CATEGORY	RATE ELEMENTS	Interim	Zone	BCS	USOC	RATES($)					Svc Order Submitted Elec per LSR	Svc Order Submitted Manually per LSR	Incremental Charge - Manual Svc Order vs. Electronic-1st	Incremental Charge - Manual Svc Order vs. Electronic-Add'l	Incremental Charge - Manual Svc Order vs. Electronic-Disc 1st	Incremental Charge - Manual Svc Order vs. Electronic-Disc Add'l
						Rec	Nonrecurring		Nonrecurring Disconnect		OSS Rates($)					
							First	Add'l	First	Add'l	SOMEC	SOMAN	SOMAN	SOMAN	SOMAN	SOMAN
	2-Wire Voice Grade Loop (SL 1) - Zone 3		3	UEP93	UECS1	42.24										
	2-Wire Voice Grade Loop (SL 2) - Zone 1		1	UEP93	UECS2	20.42										
	2-Wire Voice Grade Loop (SL 2) - Zone 2		2	UEP93	UECS2	27.41										
	2-Wire Voice Grade Loop (SL 2) - Zone 3		3	UEP93	UECS2	35.89										
UNE Port Rate																
AL, KY, LA, MS, & TN only																
	2-Wire Voice Grade Port (Centrex) Basic Local Area			UEP93	UEPYA	2.20							40.71	9.58		
	2-Wire Voice Grade Port (Centrex 800 termination)Basic Local Area			UEP93	UEPYB	2.20							40.71	9.58		
	2-Wire Voice Grade Port (Centrex with Caller ID)1Basic Local Area			UEP93	UEPYH	2.20							40.71	9.58		
	2-Wire Voice Grade Port (Centrex from diff Serving Wire Center)2 Basic Local Area			UEP93	UEPYM	2.20							40.71	9.58		
	2-Wire Voice Grade Port, Diff Serving Wire Center - 800 Service Term - Basic Local Area			UEP93	UEPYZ	2.20							40.71	9.58		
	2-Wire Voice Grade Port terminated in on Megalink or equivalent - Basic Local Area			UEP93	UEPY9	2.20							40.71	9.58		
	2-Wire Voice Grade Port Terminated on 800 Service Term - Basic Local Area			UEP93	UEPY2	2.20							40.71	9.58		
	2-Wire Voice Grade Port (Centrex)			UEP93	UEPQA	2.20							40.71	9.58		
	2-Wire Voice Grade Port (Centrex 800 termination)			UEP93	UEPQB	2.20							40.71	9.58		
	2-Wire Voice Grade Port (Centrex with Caller ID)1			UEP93	UEPQH	2.20							40.71	9.58		
	2-Wire Voice Grade Port (Centrex from diff Serving Wire Center)2			UEP93	UEPQM	2.20							40.71	9.58		
	2-Wire Voice Grade Port, Diff Serving Wire Center - 800 Service Term			UEP93	UEPQZ	2.20							40.71	9.58		
	2-Wire Voice Grade Port terminated in on Megalink or equivalent			UEP93	UEPQ9	2.20							40.71	9.58		
	2-Wire Voice Grade Port Terminated on 800 Service Term			UEP93	UEPQ2	2.20							40.71	9.58		
Local Switching																
	Centrex Intercom Funtionality, per port			UEP93	URECS	0.5488										
Local Number Portability																
	Local Number Portability (1 per port)			UEP93	LNPCC	0.35										
Features																
	All Standard Features Offered, per port			UEP93	UEPVF	2.64										
	All Centrex Control Features Offered, per port			UEP93	UEPVC	2.64										
NARS																
	Unbundled Network Access Register - Combination			UEP93	UARCX	0.00	0.00	0.00					40.71	9.58		
	Unbundled Network Access Register - Indial			UEP93	UAR1X	0.00	0.00	0.00					40.71	9.58		
	Unbundled Network Access Register - Outdial			UEP93	UAROX	0.00	0.00	0.00					40.71	9.58		
Miscellaneous Terminations																
2-Wire Trunk Side																
	Trunk Side Terminations, each			UEP93	CEND6	9.17										
4-Wire Digital (1.544 Megabits)																
	DS1 Circuit Terminations, each			UEP93	M1HD1	68.67										
	DS0 Channels Activated, Per Channel			UEP93	M1HDO	0.00	28.25						40.71	9.58		
Interoffice Channel Mileage - 2-Wire																
	Interoffice Channel Facilities Termination			UEP93	MIGBC	24.15										
	Interoffice Channel mileage, per mile or fraction of mile			UEP93	MIGBM	0.0101										
Feature Activations (DS0) Centrex Loops on Channelized DS1 Service																
D4 Channel Bank Feature Activations																
	Feature Activation on D-4 Channel Bank Centrex Loop Slot			UEP93	1PQWS	0.64										
	Feature Activation on D-4 Channel Bank FX Line Side Loop Slot			UEP93	1PQW6	0.64										
	Feature Activation on D-4 Channel Bank FX Trunk Side Loop Slot			UEP93	1PQW7	0.64										
	Feature Activation on D-4 Channel Bank Centrex Loop Slot - Different Wire Center			UEP93	1PQWP	0.64										

UNBUNDLED NETWORK ELEMENTS - Alabama														Attachment: 2		Exhibit: B	
CATEGORY		RATE ELEMENTS	Interim	Zone	BCS	USOC	RATES($)					Svc Order Submitted Elec per LSR	Svc Order Submitted Manually per LSR	Incremental Charge - Manual Svc Order vs. Electronic-1st	Incremental Charge - Manual Svc Order vs. Electronic-Add'l	Incremental Charge - Manual Svc Order vs. Electronic-Disc 1st	Incremental Charge - Manual Svc Order vs. Electronic-Disc Add'l
							Rec	Nonrecurring		Nonrecurring Disconnect		OSS Rates($)					
								First	Add'l	First	Add'l	SOMEC	SOMAN	SOMAN	SOMAN	SOMAN	SOMAN
		Feature Activation on D-4 Channel Bank Private Line Loop Slot			UEP93	1PQWV	0.64										
		Feature Activation on D-4 Channel Bank Tie Line/Trunk Loop Slot			UEP93	1PQWQ	0.64										
		Feature Activation on D-4 Channel Bank WATS Loop Slot			UEP93	1PQWA	0.64										
	Non-Recurring Charges (NRC) Associated with UNE-P Centrex																
		NRC Conversion Currently Combined Switch-As-Is with allowed changes, per port			UEP93	USAC2		2.80	0.41					40.71	9.58		
		New Centrex Standard Common Block			UEP93	M1ACS	0.00	667.21						40.71	9.58		
		New Centrex Customized Common Block			UEP93	M1ACC	0.00	667.21						40.71	9.58		
		NAR Establishment Charge, Per Occasion			UEP93	URECA	0.00	72.73						40.71	9.58		
	Note 1 - Required Port for Centrex Control in 1AESS, 5ESS & EWSD																
	Note 2 - Requres Interoffice Channel Mileage																
	Note 3 - Requires Specific Customer Premises Equipment																
	NOTE: Rates displaying an "R" in Interim column are interim and subject to rate true-up as set forth in General Terms and Conditions.																

CATEGORY	RATE ELEMENTS	Interim	Zone	BCS	USOC	RATES($) Rec	Nonrecurring First	Nonrecurring Add'l	Nonrecurring Disconnect First	Nonrecurring Disconnect Add'l	Svc Order Submitted Elec per LSR	Svc Order Submitted Manually per LSR	Incremental Charge - Manual Svc Order vs. Electronic-1st	Incremental Charge - Manual Svc Order vs. Electronic-Add'l	Incremental Charge - Manual Svc Order vs. Electronic-Disc 1st	Incremental Charge - Manual Svc Order vs. Electronic-Disc Add'l
											OSS Rates($)					
											SOMEC	SOMAN	SOMAN	SOMAN	SOMAN	SOMAN
OPERATIONAL SUPPORT SYSTEMS																
	NOTE: (1) Electronic Service Order: CLEC should contact its contract negotiator if it prefers the state specific electronic service ordering charges as ordered by the State Commissions. The electronic service ordering charge currently contained in this rate exhibit is the BellSouth regional electronic service ordering charge. CLEC may elect either the state specific Commission ordered rates for the electronic service ordering charges, or CLEC may elect the regional electronic service ordering charge.															
	NOTE: (2) Any element that can be ordered electronically will be billed according to the SOMEC rate listed in this category. Please refer to BellSouth's Business Rules for Local Ordering (BBR-LO) to determine if a product can be ordered electronically. For those elements that cannot be ordered electronically at present per the BBR-LO, the listed SOMEC rate in this category reflects the charge that would be billed to a CLEC once electronic ordering capabilities come on-line for that element. Otherwise, the manual ordering charge, SOMAN, will be applied to a CLECs bill when it submits an LSR to BellSouth.															
	Manual Service Order Charge, per LSR, Disconnect Only (FL)				SOMAN				1.83							
	Electronic OSS Charge, per LSR, submitted via BST's OSS interactive interfaces (Regional)				SOMEC		3.50									
UNBUNDLED EXCHANGE ACCESS LOOP																
	2-WIRE ANALOG VOICE GRADE LOOP															
	2-Wire Analog Voice Grade Loop - Service Level 1- Zone 1		1	UEANL	UEAL2	12.79	49.57	22.83	25.62	6.57		11.90				
	2-Wire Analog Voice Grade Loop - Service Level 1- Zone 2		2	UEANL	UEAL2	17.27	49.57	22.83	25.62	6.57		11.90				
	2-Wire Analog Voice Grade Loop - Service Level 1- Zone 3		3	UEANL	UEAL2	33.36	49.57	22.83	25.62	6.57		11.90				
	Loop Testing - Basic 1st Half Hour			UEANL	URET1		77.09					11.90				
	Loop Testing - Basic Additional Half Hour			UEANL	URETA		33.12					11.90				
	CLEC to CLEC Conversion Charge Without Outside Dispatch (UVL-SL1)			UEANL	UREWO		15.78	8.94				11.90				
	Engineering Information Document (EI)			UEANL			12.28	12.28								
	Manual Order Coordination for UVL-SL1s (per loop)			UEANL	UEAMC		9.00	9.00								
	Order Coordination for Specified Conversion Time for UVL-SL1 (per LSR)			UEANL	OCOSL		23.02	23.02								
	2-WIRE Unbundled COPPER LOOP															
	2-Wire Unbundled Copper Loop - Non-Designed Zone 1	I	1	UEQ	UEQ2X	13.83	41.64	19.02	19.65	5.09		11.90				
	2 Wire Unbundled Copper Loop - Non-Designed - Zone 2	I	2	UEQ	UEQ2X	15.29	41.64	19.02	19.65	5.09		11.90				
	2 Wire Unbundled Copper Loop - Non-Designed - Zone 3	I	3	UEQ	UEQ2X	20.29	41.64	19.02	19.65	5.09		11.90				
	Order Coordination 2 Wire Unbundled Copper Loop - Non-Designed (per loop)			UEQ	USBMC		9.00	9.00								
	Engineering Information Document			UEQ			12.28	12.28				11.90				
	Loop Testing - Basic 1st Half Hour			UEQ	URET1		77.09					11.90				
	Loop Testing - Basic Additional Half Hour			UEQ	URETA		33.12					11.90				
	CLEC to CLEC Conversion Charge Without Outside Dispatch (UCL-ND)			UEQ	UREWO		14.27	7.43				11.90				
UNBUNDLED EXCHANGE ACCESS LOOP																
	2-WIRE ANALOG VOICE GRADE LOOP															
	2 Wire Analog Voice Grade Loop-Service Level 1-Line Splitting-Zone 1		1	UEPSR UEPSB	UEALS	12.79	49.57	22.83	25.62	6.57		11.90				
	2 Wire Analog Voice Grade Loop-Service Level 1-Line Splitting-Zone 1		1	UEPSR UEPSB	UEABS	12.79	49.57	22.83	25.62	6.57		11.90				
	2 Wire Analog Voice Grade Loop- Service Level 1-Line Splitting-Zone 2		2	UEPSR UEPSB	UEALS	17.27	49.57	22.83	25.62	6.57		11.90				
	2 Wire Analog Voice Grade Loop- Service Level 1-Line Splitting-Zone 2		2	UEPSR UEPSB	UEABS	17.27	49.57	22.83	25.62	6.57		11.90				
	2 Wire Analog Voice Grade Loop-Service Level 1-Line Splitting-Zone 3		3	UEPSR UEPSB	UEALS	33.36	49.57	22.83	25.62	6.57		11.90				
	2 Wire Analog Voice Grade Loop-Service Level 1-Line Splitting-Zone 3		3	UEPSR UEPSB	UEABS	33.36	49.57	22.83	25.62	6.57		11.90				
UNBUNDLED EXCHANGE ACCESS LOOP																
	2-WIRE ANALOG VOICE GRADE LOOP															
	2-Wire Analog Voice Grade Loop - Service Level 2 w/Loop or Ground Start Signaling - Zone 1		1	UEA	UEAL2	14.50	135.75	82.47	63.53	12.01		11.90				
	2-Wire Analog Voice Grade Loop - Service Level 2 w/Loop or Ground Start Signaling - Zone 2		2	UEA	UEAL2	19.57	135.75	82.47	63.53	12.01		11.90				
	2-Wire Analog Voice Grade Loop - Service Level 2 w/Loop or Ground Start Signaling - Zone 3		3	UEA	UEAL2	37.82	135.75	82.47	63.53	12.01		11.90				
	Order Coordination for Specified Conversion Time (per LSR)			UEA	OCOSL		23.02									
	2-Wire Analog Voice Grade Loop - Service Level 2 w/Reverse Battery Signaling - Zone 1		1	UEA	UEAR2	14.50	135.75	82.47	63.53	12.01		11.90				

CATEGORY	RATE ELEMENTS	Interim	Zone	BCS	USOC	RATES($)					Svc Order Submitted Elec per LSR	Svc Order Submitted Manually per LSR	Incremental Charge - Manual Svc Order vs. Electronic-1st	Incremental Charge - Manual Svc Order vs. Electronic-Add'l	Incremental Charge - Manual Svc Order vs. Electronic-Disc 1st	Incremental Charge - Manual Svc Order vs. Electronic-Disc Add'l
						Rec	Nonrecurring		Nonrecurring Disconnect		OSS Rates($)					
							First	Add'l	First	Add'l	SOMEC	SOMAN	SOMAN	SOMAN	SOMAN	SOMAN
	2-Wire Analog Voice Grade Loop - Service Level 2 w/Reverse Battery Signaling - Zone 2		2	UEA	UEAR2	19.57	135.75	82.47	63.53	12.01		11.90				
	2-Wire Analog Voice Grade Loop - Service Level 2 w/Reverse Battery Signaling - Zone 3		3	UEA	UEAR2	37.82	135.75	82.47	63.53	12.01		11.90				
	Order Coordination for Specified Conversion Time (per LSR)			UEA	OCOSL		23.02									
	CLEC to CLEC Conversion Charge without outside dispatch			UEA	UREWO		87.71	36.35				11.90				
4-WIRE ANALOG VOICE GRADE LOOP																
	4-Wire Analog Voice Grade Loop - Zone 1		1	UEA	UEAL4	23.02	167.86	115.15	67.08	15.56		11.90				
	4-Wire Analog Voice Grade Loop - Zone 2		2	UEA	UEAL4	31.07	167.86	115.15	67.08	15.56		11.90				
	4-Wire Analog Voice Grade Loop - Zone 3		3	UEA	UEAL4	60.02	167.86	115.15	67.08	15.56		11.90				
	Order Coordination for Specified Conversion Time (per LSR)			UEA	OCOSL		23.02									
	CLEC to CLEC Conversion Charge without outside dispatch			UEA	UREWO		87.71	36.35				11.90				
2-WIRE ISDN DIGITAL GRADE LOOP																
	2-Wire ISDN Digital Grade Loop - Zone 1		1	UDN	U1L2X	21.76	147.69	94.41	62.23	10.71		11.90				
	2-Wire ISDN Digital Grade Loop - Zone 2		2	UDN	U1L2X	29.38	147.69	94.41	62.23	10.71		11.90				
	2-Wire ISDN Digital Grade Loop - Zone 3		3	UDN	U1L2X	56.76	147.69	94.41	62.23	10.71		11.90				
	Order Coordination For Specified Conversion Time (per LSR)			UDN	OCOSL		23.02									
	CLEC to CLEC Conversion Charge without outside dispatch			UDN	UREWO		91.61	44.15				11.90				
2-WIRE Universal Digital Channel (UDC) COMPATIBLE LOOP																
	2-Wire Universal Digital Channel (UDC) Compatible Loop - Zone 1		1	UDC	UDC2X	21.76	147.69	94.41	62.23	10.71		11.90				
	2-Wire Universal Digital Channel (UDC) Compatible Loop - Zone 2		2	UDC	UDC2X	29.38	147.69	94.41	62.23	10.71		11.90				
	2-Wire Universal Digital Channel (UDC) Compatible Loop - Zone 3		3	UDC	UDC2X	56.76	147.69	94.41	62.23	10.71		11.90				
	CLEC to CLEC Conversion Charge without outside dispatch			UDC	UREWO		91.61	44.15				11.90				
2-WIRE ASYMMETRICAL DIGITAL SUBSCRIBER LINE (ADSL) COMPATIBLE LOOP																
	2 Wire Unbundled ADSL Loop including manual service inquiry & facility reservation - Zone 1		1	UAL	UAL2X	12.65	149.53	103.85	75.05	15.63		11.90				
	2 Wire Unbundled ADSL Loop including manual service inquiry & facility reservation - Zone 2		2	UAL	UAL2X	17.08	149.53	103.85	75.05	15.63		11.90				
	2 Wire Unbundled ADSL Loop including manual service inquiry & facility reservation - Zone 3		3	UAL	UAL2X	33.00	149.53	103.85	75.05	15.63		11.90				
	Order Coordination for Specified Conversion Time (per LSR)			UAL	OCOSL		23.02									
	2 Wire Unbundled ADSL Loop without manual service inquiry & facility reservaton - Zone 1		1	UAL	UAL2W	12.65	124.83	71.12	60.64	9.12		11.90				
	2 Wire Unbundled ADSL Loop without manual service inquiry & facility reservaton - Zone 2		2	UAL	UAL2W	17.08	124.83	71.12	60.64	9.12		11.90				
	2 Wire Unbundled ADSL Loop without manual service inquiry & facility reservaton - Zone 3		3	UAL	UAL2W	33.00	124.83	71.12	60.64	9.12		11.90				
	Order Coordination for Specified Conversion Time (per LSR)			UAL	OCOSL		23.02									
	CLEC to CLEC Conversion Charge without outside dispatch			UAL	UREWO		86.19	40.39				11.90				
2-WIRE HIGH BIT RATE DIGITAL SUBSCRIBER LINE (HDSL) COMPATIBLE LOOP																
	2 Wire Unbundled HDSL Loop including manual service inquiry & facility reservation - Zone 1		1	UHL	UHL2X	9.97	159.09	113.41	75.05	15.63		11.90				
	2 Wire Unbundled HDSL Loop including manual service inquiry & facility reservation - Zone 2		2	UHL	UHL2X	13.46	159.09	113.41	75.05	15.63		11.90				
	2 Wire Unbundled HDSL Loop including manual service inquiry & facility reservation - Zone 3		3	UHL	UHL2X	26.00	159.09	113.41	75.05	15.63		11.90				
	Order Coordination for Specified Conversion Time (per LSR)			UHL	OCOSL		23.02									
	2 Wire Unbundled HDSL Loop without manual service inquiry and facility reservation - Zone 1		1	UHL	UHL2W	9.97	134.40	80.69	60.64	9.12		11.90				
	2 Wire Unbundled HDSL Loop without manual service inquiry and facility reservation - Zone 2		2	UHL	UHL2W	13.46	134.40	80.69	60.64	9.12		11.90				
	2 Wire Unbundled HDSL Loop without manual service inquiry and facility reservation - Zone 3		3	UHL	UHL2W	26.00	134.40	80.69	60.64	9.12		11.90				
	Order Coordination for Specified Conversion Time (per LSR)			UHL	OCOSL		23.02									
	CLEC to CLEC Conversion Charge without outside dispatch			UHL	UREWO		86.12	40.39				11.90				
4-WIRE HIGH BIT RATE DIGITAL SUBSCRIBER LINE (HDSL) COMPATIBLE LOOP																

CATEGORY	RATE ELEMENTS	Interim	Zone	BCS	USOC	RATES($) Rec	Nonrecurring First	Nonrecurring Add'l	Nonrecurring Disconnect First	Nonrecurring Disconnect Add'l	Svc Order Submitted Elec per LSR	Svc Order Submitted Manually per LSR	Incremental Charge - Manual Svc Order vs. Electronic-1st	Incremental Charge - Manual Svc Order vs. Electronic-Add'l	Incremental Charge - Manual Svc Order vs. Electronic-Disc 1st	Incremental Charge - Manual Svc Order vs. Electronic-Disc Add'l
											OSS Rates($)					
											SOMEC	SOMAN	SOMAN	SOMAN	SOMAN	SOMAN
	4 Wire Unbundled HDSL Loop including manual service inquiry and facility reservation - Zone 1		1	UHL	UHL4X	15.69	193.31	138.98	77.15	12.61		11.90				
	4-Wire Unbundled HDSL Loop including manual service inquiry and facility reservation - Zone 2		2	UHL	UHL4X	21.17	193.31	138.98	77.15	12.61		11.90				
	4-Wire Unbundled HDSL Loop including manual service inquiry and facility reservation - Zone 3		3	UHL	UHL4X	40.90	193.31	138.98	77.15	12.61		11.90				
	Order Coordination for Specified Conversion Time (per LSR)			UHL	OCOSL		23.02									
	4-Wire Unbundled HDSL Loop without manual service inquiry and facility reservation - Zone 1		1	UHL	UHL4W	15.69	168.62	115.47	62.74	11.22		11.90				
	4-Wire Unbundled HDSL Loop without manual service inquiry and facility reservation - Zone 2		2	UHL	UHL4W	21.17	168.62	115.47	62.74	11.22		11.90				
	4-Wire Unbundled HDSL Loop without manual service inquiry and facility reservation - Zone 3		3	UHL	UHL4W	40.90	168.62	115.47	62.74	11.22		11.90				
	Order Coordination for Specified Conversion Time (per LSR)			UHL	OCOSL		23.02									
	CLEC to CLEC Conversion Charge without outside dispatch			UHL	UREWO		86.12	40.39				11.90				
4-WIRE DS1 DIGITAL LOOP																
	4-Wire DS1 Digital Loop - Zone 1		1	USL	USLXX	73.44	313.75	181.48	61.22	13.53		11.90				
	4-Wire DS1 Digital Loop - Zone 2		2	USL	USLXX	99.13	313.75	181.48	61.22	13.53		11.90				
	4-Wire DS1 Digital Loop - Zone 3		3	USL	USLXX	191.51	313.75	181.48	61.22	13.53		11.90				
	Order Coordination for Specified Conversion Time (per LSR)			USL	OCOSL		23.02									
	CLEC to CLEC Conversion Charge without outside dispatch			USL	UREWO		101.07	43.04				11.90				
4-WIRE 19.2, 56 OR 64 KBPS DIGITAL GRADE LOOP																
	4 Wire Unbundled Digital 19.2 Kbps		1	UDL	UDL19	26.39	161.56	108.85	67.08	15.56		11.90				
	4 Wire Unbundled Digital 19.2 Kbps		2	UDL	UDL19	35.62	161.56	108.85	67.08	15.56		11.90				
	4 Wire Unbundled Digital 19.2 Kbps		3	UDL	UDL19	68.82	161.56	108.85	67.08	15.56		11.90				
	4 Wire Unbundled Digital Loop 56 Kbps - Zone 1		1	UDL	UDL56	26.39	161.56	108.85	67.08	15.56		11.90				
	4 Wire Unbundled Digital Loop 56 Kbps - Zone 2		2	UDL	UDL56	35.62	161.56	108.85	67.08	15.56		11.90				
	4 Wire Unbundled Digital Loop 56 Kbps - Zone 3		3	UDL	UDL56	68.82	161.56	108.85	67.08	15.56		11.90				
	Order Coordination for Specified Conversion Time (per LSR)			UDL	OCOSL		23.02									
	4 Wire Unbundled Digital Loop 64 Kbps - Zone 1		1	UDL	UDL64	26.39	161.56	108.85	67.08	15.56		11.90				
	4 Wire Unbundled Digital Loop 64 Kbps - Zone 2		2	UDL	UDL64	35.62	161.56	108.85	67.08	15.56		11.90				
	4 Wire Unbundled Digital Loop 64 Kbps - Zone 3		3	UDL	UDL64	68.82	161.56	108.85	67.08	15.56		11.90				
	Order Coordination for Specified Conversion Time (per LSR)			UDL	OCOSL		23.02									
	CLEC to CLEC Conversion Charge without outside dispatch			UDL	UREWO		102.11	49.74				11.90				
2-WIRE Unbundled COPPER LOOP																
	2-Wire Unbundled Copper Loop/Short including manual service inquiry & facility reservation - Zone 1		1	UCL	UCLPB	12.65	148.50	102.82	75.05	15.63		11.90				
	2-Wire Unbundled Copper Loop/Short including manual service inquiry & facility reservation - Zone 2		2	UCL	UCLPB	17.08	148.50	102.82	75.05	15.63		11.90				
	2 Wire Unbundled Copper Loop/Short including manual service inquiry & facility reservation - Zone 3		3	UCL	UCLPB	33.00	148.50	102.82	75.05	15.63		11.90				
	Order Coordination for Unbundled Copper Loops (per loop)			UCL	UCLMC		9.00	9.00								
	2-Wire Unbundled Copper Loop/Short without manual service inquiry and facility reservation - Zone 1		1	UCL	UCLPW	12.65	123.81	70.09	60.64	9.12		11.90				
	2-Wire Unbundled Copper Loop/Short without manual service inquiry and facility reservation - Zone 2		2	UCL	UCLPW	17.08	123.81	70.09	60.64	9.12		11.90				
	2-Wire Unbundled Copper Loop/Short without manual service inquiry and facility reservation - Zone 3		3	UCL	UCLPW	33.00	123.81	70.09	60.64	9.12		11.90				
	Order Coordination for Unbundled Copper Loops (per loop)			UCL	UCLMC		9.00	9.00								
	2-Wire Unbundled Copper Loop/Long - includes manual srvc. inquiry and facility reservation - Zone 1		1	UCL	UCL2L	37.07	148.50	102.82	75.05	15.63		11.90				
	2-Wire Unbundled Copper Loop/Long - includes manual svc. inquiry and facility reservation - Zone 2		2	UCL	UCL2L	50.04	148.50	102.82	75.05	15.63		11.90				
	2-Wire Unbundled Copper Loop/Long - includes manual svc. inquiry and facility reservation - Zone 3		3	UCL	UCL2L	96.67	148.50	102.82	75.05	15.63		11.90				
	Order Coordination for Unbundled Copper Loops (per loop)			UCL	UCLMC		9.00	9.00								
	2-Wire Unbundled Copper Loop/Long - without manual service inquiry and facility reservation - Zone 1		1	UCL	UCL2W	37.07	123.81	70.09	60.64	9.12		11.90				

CATEGORY	RATE ELEMENTS	Interim	Zone	BCS	USOC	RATES($) Rec	Nonrecurring First	Nonrecurring Add'l	Nonrecurring Disconnect First	Nonrecurring Disconnect Add'l	Svc Order Submitted Elec per LSR	Svc Order Submitted Manually per LSR	Incremental Charge - Manual Svc Order vs. Electronic- 1st	Incremental Charge - Manual Svc Order vs. Electronic- Add'l	Incremental Charge - Manual Svc Order vs. Electronic- Disc 1st	Incremental Charge - Manual Svc Order vs. Electronic- Disc Add'l
											OSS Rates($)					
											SOMEC	SOMAN	SOMAN	SOMAN	SOMAN	SOMAN
	2-Wire Unbundled Copper Loop/Long - without manual service inquiry and facility reservation - Zone 2		2	UCL	UCL2W	50.04	123.81	70.09	60.64	9.12		11.90				
	2-Wire Unbundled Copper Loop/Long - without manual service inquiry and facility reservation - Zone 3		3	UCL	UCL2W	96.67	123.81	70.09	60.64	9.12		11.90				
	Order Coordination for Unbundled Copper Loops (per loop)			UCL	UCLMC		9.00	9.00								
	CLEC to CLEC Conversion Charge without outside dispatch (UCL -Des)			UCL	UREWO		97.21	42.47				11.90				
4-WIRE COPPER LOOP																
	4-Wire Copper Loop/Short - including manual service inquiry and facility reservation - Zone 1		1	UCL	UCL4S	18.03	177.87	132.76	77.15	17.73		11.90				
	4-Wire Copper Loop/Short - including manual service inquiry and facility reservation - Zone 2		2	UCL	UCL4S	24.34	177.87	132.76	77.15	17.73		11.90				
	4-Wire Copper Loop/Short - including manual service inquiry and facility reservation - Zone 3		3	UCL	UCL4S	47.02	177.87	132.76	77.15	17.73		11.90				
	Order Coordination for Unbundled Copper Loops (per loop)			UCL	UCLMC		9.00	9.00								
	4-Wire Copper Loop/Short - without manual service inquiry and facility reservation - Zone 1		1	UCL	UCL4W	18.03	153.18	100.03	62.74	11.22		11.90				
	4-Wire Copper Loop/Short - without manual service inquiry and facility reservation - Zone 2		2	UCL	UCL4W	24.34	153.18	100.03	62.74	11.22		11.90				
	4-Wire Copper Loop/Short - without manual service inquiry and facility reservation - Zone 3		3	UCL	UCL4W	47.02	153.18	100.03	62.74	11.22		11.90				
	Order Coordination for Unbundled Copper Loops (per loop)			UCL	UCLMC		9.00	9.00								
	4-Wire Unbundled Copper Loop/Long - includes manual svc. inquiry and facility reservation - Zone 1		1	UCL	UCL4L	64.52	177.87	132.76	77.15	17.73		11.90				
	4-Wire Unbundled Copper Loop/Long - includes manual svc. inquiry and facility reservation - Zone 2		2	UCL	UCL4L	87.09	177.87	132.76	77.15	17.73		11.90				
	4-Wire Unbundled Copper Loop/Long - includes manual svc. inquiry and facility reservation - Zone 3		3	UCL	UCL4L	168.25	177.87	132.76	77.15	17.73		11.90				
	Order Coordination for Unbundled Copper Loops (per loop)			UCL	UCLMC		9.00	9.00								
	4-Wire Unbundled Copper Loop/Long - without manual svc. inquiry and facility reservation - Zone 1		1	UCL	UCL4O	64.52	153.18	100.03	62.74	11.22		11.90				
	4-Wire Unbundled Copper Loop/Long - without manual svc. inquiry and facility reservation - Zone 2		2	UCL	UCL4O	87.09	153.18	100.03	62.74	11.22		11.90				
	4-Wire Unbundled Copper Loop/Long - without manual svc. inquiry and facility reservation - Zone 3		3	UCL	UCL4O	168.25	153.18	100.03	62.74	11.22		11.90				
	Order Coordination for Unbundled Copper Loops (per loop)			UCL	UCLMC		9.00	9.00								
	CLEC to CLEC Conversion Charge without outside dispatch			UCL	UREWO		97.21	42.47				11.90				
LOOP MODIFICATION																
	Unbundled Loop Modification, Removal of Load Coils - 2 Wire pair less than or equal to 18k ft			UAL, UHL, UCL, UEQ, ULS, UEA, UEANL, UDL, UDC, UDN, UDL, USL	ULM2L		0.00	0.00								
	Unbundled Loop Modification, Removal of Load Coils - 2 wire greater than 18k ft			UCL, ULS	ULM2G		343.12	343.12				11.90				
	Unbundled Loop Modification Removal of Load Coils - 4 Wire less than or equal to 18K ft			UHL, UCL	ULM4L		0.00	0.00								
	Unbundled Loop Modification Removal of Load Coils - 4 Wire pair greater than 18k ft			UCL	ULM4G		343.12	343.12				11.90				
	Unbundled Loop Modification Removal of Bridged Tap Removal, per unbundled loop			UAL, UHL, UCL, UEQ, UEF, ULS, UEA, UEANL, UDL, UDC, UDN, UDL, USL	ULMBT		10.52	10.52				11.90				
SUB-LOOPS																
Sub-Loop Distribution																
	Sub-Loop - Per Cross Box Location - CLEC Feeder Facility Set-Up	I		UEANL	USBSA		487.23	487.23				11.90				
	Sub-Loop - Per Cross Box Location - Per 25 Pair Panel Set-Up	I		UEANL	USBSB		6.25	6.25				11.90				

CATEGORY	RATE ELEMENTS	Interim	Zone	BCS	USOC	RATES($) Rec	Nonrecurring First	Nonrecurring Add'l	Nonrecurring Disconnect First	Nonrecurring Disconnect Add'l	Svc Order Submitted Elec per LSR	Svc Order Submitted Manually per LSR	Incremental Charge - Manual Svc Order vs. Electronic-1st	Incremental Charge - Manual Svc Order vs. Electronic-Add'l	Incremental Charge - Manual Svc Order vs. Electronic-Disc 1st	Incremental Charge - Manual Svc Order vs. Electronic-Disc Add'l
											OSS Rates($)					
							First	Add'l	First	Add'l	SOMEC	SOMAN	SOMAN	SOMAN	SOMAN	SOMAN
	Sub-Loop - Per Building Equipment Room - CLEC Feeder Facility Set-Up	I		UEANL	USBSC		169.25	169.25				11.90				
	Sub-Loop - Per Building Equipment Room - Per 25 Pair Panel Set-Up	I		UEANL	USBSD		38.65	38.65				11.90				
	Sub-Loop Distribution Per 2-Wire Analog Voice Grade Loop - Zone 1		1	UEANL	USBN2	7.61	60.19	21.78	47.50	5.26		11.90				
	Sub-Loop Distribution Per 2-Wire Analog Voice Grade Loop - Zone 2		2	UEANL	USBN2	10.27	60.19	21.78	47.50	5.26		11.90				
	Sub-Loop Distribution Per 2-Wire Analog Voice Grade Loop - Zone 3		3	UEANL	USBN2	19.85	60.19	21.78	47.50	5.26		11.90				
	Order Coordination for Unbundled Sub-Loops, per sub-loop pair			UEANL	USBMC		9.00	9.00								
	Sub-Loop Distribution Per 4-Wire Analog Voice Grade Loop - Zone 1		1	UEANL	USBN4	8.12	68.83	30.42	49.71	6.60		11.90				
	Sub-Loop Distribution Per 4-Wire Analog Voice Grade Loop - Zone 2		2	UEANL	USBN4	10.96	68.83	30.42	49.71	6.60		11.90				
	Sub-Loop Distribution Per 4-Wire Analog Voice Grade Loop - Zone 3		3	UEANL	USBN4	21.18	68.83	30.42	49.71	6.60		11.90				
	Order Coordination for Unbundled Sub-Loops, per sub-loop pair			UEANL	USBMC		9.00	9.00								
	Sub-Loop 2-Wire Intrabuilding Network Cable (INC)	I		UEANL	USBR2	3.50	51.84	13.44	47.50	5.26		11.90				
	Order Coordination for Unbundled Sub-Loops, per sub-loop pair			UEANL	USBMC		9.00	9.00								
	Sub-Loop 4-Wire Intrabuilding Network Cable (INC)	I		UEANL	USBR4	6.68	55.91	17.51	49.71	6.60		11.90				
	Order Coordination for Unbundled Sub-Loops, per sub-loop pair			UEANL	USBMC		9.00	9.00								
	2 Wire Copper Unbundled Sub-Loop Distribution - Zone 1	I	1	UEF	UCS2X	6.25	60.19	21.78	47.50	5.26		11.90				
	2 Wire Copper Unbundled Sub-Loop Distribution - Zone 2	I	2	UEF	UCS2X	8.44	60.19	21.78	47.50	5.26		11.90				
	2 Wire Copper Unbundled Sub-Loop Distribution - Zone 3	I	3	UEF	UCS2X	16.30	60.19	21.78	47.50	5.26		11.90				
	Order Coordination for Unbundled Sub-Loops, per sub-loop pair			UEF	USBMC		9.00	9.00								
	4 Wire Copper Unbundled Sub-Loop Distribution - Zone 1	I	1	UEF	UCS4X	5.20	68.83	30.42	49.71	6.60		11.90				
	4 Wire Copper Unbundled Sub-Loop Distribution - Zone 2	I	2	UEF	UCS4X	7.02	68.83	30.42	49.71	6.60		11.90				
	4 Wire Copper Unbundled Sub-Loop Distribution - Zone 3	I	3	UEF	UCS4X	13.55	68.83	30.42	49.71	6.60		11.90				
	Order Coordination for Unbundled Sub-Loops, per sub-loop pair			UEF	USBMC		9.00	9.00								
	Unbundled Sub-Loop Modification															
	Unbundled Sub-Loop Modification - 2-W Copper Dist Load Coil/Equip Removal per 2-W PR			UEF	ULM2X		10.11	10.11				11.90				
	Unbundled Sub-loop Modification - 4-W Copper Dist Load Coil/Equip Removal per 4-W PR			UEF	ULM4X		10.11	10.11				11.90				
	Unbundled Sub-loop Modification - 2-w/4-w Copper Dist Bridged Tap Removal, per PR unloaded			UEF	ULM4T		15.58	15.58				11.90				
	Unbundled Network Terminating Wire (UNTW)															
	Unbundled Network Terminating Wire (UNTW) per Pair			UENTW	UENPP	0.2286	18.02	18.02				11.90				
	Network Interface Device (NID)															
	Network Interface Device (NID) - 1-2 lines			UENTW	UND12		68.08	42.80				11.90				
	Network Interface Device (NID) - 1-6 lines			UENTW	UND16		110.48	85.20				11.90				
	Network Interface Device Cross Connect - 2 W			UENTW	UNDC2		7.63	7.63				11.90				
	Network Interface Device Cross Connect - 4W			UENTW	UNDC4		7.63	7.63				11.90				
SUB-LOOPS																
	Sub-Loop Feeder															
	USL-Feeder, DS0 Set-up per Cross Box location - CLEC Distribution Facility set-up			UEA, UDN,UCL,UDL,UDC	USBFW		487.23					11.90				
	USL Feeder - DS0 Set-up per Cross Box location - per 25 pair set-up			UEA, UDN,UCL,UDL,UDC	USBFX		6.25	6.25				11.90				
	USL Feeder DS1 Set-up at DSX location, per DS1 termination			USL	USBFZ		522.41	11.32				11.90				
	Unbundled Sub-Loop Feeder Loop, 2 Wire Ground Start, Voice Grade - Zone 1		1	UEA	USBFA	8.05	92.75	51.24	58.45	13.07		11.90				

CATEGORY		RATE ELEMENTS	Interim	Zone	BCS	USOC	RATES($)					Svc Order Submitted Elec per LSR	Svc Order Submitted Manually per LSR	Incremental Charge - Manual Svc Order vs. Electronic-1st	Incremental Charge - Manual Svc Order vs. Electronic-Add'l	Incremental Charge - Manual Svc Order vs. Electronic-Disc 1st	Incremental Charge - Manual Svc Order vs. Electronic-Disc Add'l
							Rec	Nonrecurring		Nonrecurring Disconnect		OSS Rates($)					
								First	Add'l	First	Add'l	SOMEC	SOMAN	SOMAN	SOMAN	SOMAN	SOMAN
		Unbundled Sub-Loop Feeder Loop, 2 Wire Ground-Start, Voice Grade - Zone 2		2	UEA	USBFA	10.87	92.75	51.24	58.45	13.07		11.90				
		Unbundled Sub-Loop Feeder Loop, Per 2 Wire Ground-Start, Voice Grade - Zone 3		3	UEA	USBFA	21.00	92.75	51.24	58.45	13.07		11.90				
		Order Coordination for Specified Conversion Time, per LSR			UEA	OCOSL		23.02									
		Unbundlde Sub-Loop Feeder Loop, 2 Wire Loop-Start, Voice Grade - Zone 1		1	UEA	USBFB	8.05	92.75	51.24	58.45	13.07		11.90				
		Unbundled Sub-Loop Feeder Loop, 2 Wire Loop-Start, Voice Grade - Zone 2		2	UEA	USBFB	10.87	92.75	51.24	58.45	13.07		11.90				
		Unbundled Sub-Loop Feeder Loop, 2 Wire Start Loop, Voice Grade - Zone 3		3	UEA	USBFB	21.00	92.75	51.24	58.45	13.07		11.90				
		Order Coordination for Specified Time Conversion, per LSR			UEA	OCOSL		23.02									
		Unbundled Sub-Loop Feeder Loop, 2 Wire Reverse Battery, Voice Grade - Zone 1		1	UEA	USBFC	8.05	92.75	51.24	58.45	13.07		11.90				
		Unbundled Sub-Loop Feeder Loop, 2 Wire Reverse Battery, Voice Grade - Zone 2		2	UEA	USBFC	10.87	92.75	51.24	58.45	13.07		11.90				
		Unbundled Sub-Loop Feeder Loop, 2 Wire Analog Reverse Battery, Voice Grade - Zone 3		3	UEA	USBFC	21.00	92.75	51.24	58.45	13.07		11.90				
		Order Coordination For Specified Conversion Time, per LSR			UEA	OCOSL		23.02									
		Unbundled Sub-Loop Feeder Loop, 4 Wire Ground-Start, Voice Grade - Zone 1		1	UEA	USBFD	17.26	106.92	64.46	63.54	14.83		11.90				
		Unbundled Sub-Loop Feeder Loop, 4 Wire Ground-Start, Voice Grade - Zone 2		2	UEA	USBFD	23.29	106.92	64.46	63.54	14.83		11.90				
		Unbundled Sub-Loop Feeder Loop, 4 Wire Ground Start, Voice Grade - Zone 3		3	UEA	USBFD	45.00	106.92	64.46	63.54	14.83		11.90				
		Order Coordination For Specified Conversion Time, Per LSR			UEA	OCOSL		23.02									
		Unbundled Sub-Loop Feeder Loop, 4 Wire Loop-Start, Voice Grade - Zone 1		1	UEA	USBFE	17.26	106.92	64.46	63.54	14.83		11.90				
		Unbundled Sub-Loop Feeder Loop, 4 Wire Loop-Start, Voice Grade - Zone 2		2	UEA	USBFE	23.29	106.92	64.46	63.54	14.83		11.90				
		Unbundled Sub-Loop Feeder Loop, 4 Wire Loop-Start, Voice Grade - Zone 3		3	UEA	USBFE	45.00	106.92	64.46	63.54	14.83		11.90				
		Order Coordination For Specified Conversion Time, Per LSR			UEA	OCOSL		23.02									
		Unbundled Sub-Loop Feeder Loop, 2 Wire ISDN BRI - Zone 1		1	UDN	USBFF	17.04	109.71	66.68	60.21	12.49		11.90				
		Unbundled Sub-Loop Feeder Loop, 2-Wire ISDN BRI - Zone 2		2	UDN	USBFF	23.00	109.71	66.68	60.21	12.49		11.90				
		Unbundled Sub-Loop Feeder Loop, 2-Wire ISDN BRI - Zone 3		3	UDN	USBFF	44.43	109.71	66.68	60.21	12.49		11.90				
		Order Coordination For Specified Conversion Time, Per LSR			UDN	OCOSL		23.02									
		Unbundled Sub-Loop Feeder, 2 Wire UDC (IDSL compatible)		1	UDC	USBFS	17.04	109.71	66.68	60.21	12.49		11.90				
		Unbundled Sub-Loop Feeder, 2 Wire UDC (IDSL compatible)		2	UDC	USBFS	23.00	109.71	66.68	60.21	12.49		11.90				
		Unbundled Sub-Loop Feeder, 2 Wire UDC (IDSL compatible)		3	UDC	USBFS	44.43	109.71	66.68	60.21	12.49		11.90				
		Unbundled Sub-Loop Feeder Loop, 4-Wire DS1 - Zone 1		1	USL	USBFG	46.27	133.77	78.02	85.16	21.21		11.90				
		Unbundled Sub-Loop Feeder Loop, 4-Wire DS1 - Zone 2		2	USL	USBFG	62.45	133.77	78.02	85.16	21.21		11.90				
		Unbundled Sub-Loop Feeder Loop, 4-Wire DS1 - Zone 3		3	USL	USBFG	120.65	133.77	78.02	85.16	21.21		11.90				
		Order Coordination For Specified Conversion Time, Per LSR			USL	OCOSL		23.02									
		Unbundled Sub-Loop Feeder, 2-Wire Copper Loop - Zone 1		1	UCL	USBFH	7.25	85.27	42.24	58.54	10.82		11.90				
		Unbundled Sub-Loop Feeder Loop, 2-Wire Copper Loop - Zone 2		2	UCL	USBFH	9.79	85.27	42.24	58.54	10.82		11.90				
		Unbundled Sub-Loop Feeder Loop, 2-Wire Copper Loop - Zone 3		3	UCL	USBFH	18.92	85.27	42.24	58.54	10.82		11.90				
		Order Coordination For Specified Conversion Time, per LSR			UCL	OCOSL		23.02									
		Sub-Loop Feeder - Per 4-Wire Copper Loop - Zone 1		1	UCL	USBFJ	14.22	99.66	57.20	60.98	12.28		11.90				
		Sub-Loop Feeder - Per 4-Wire Copper Loop - Zone 2		2	UCL	USBFJ	19.20	99.66	57.20	60.98	12.28		11.90				
		Sub-Loop Feeder - Per 4-Wire Copper Loop - Zone 3		3	UCL	USBFJ	37.09	99.66	57.20	60.98	12.28		11.90				
		Order Coordination For Specified Conversion Time, per LSR			UCL	OCOSL		23.02									
		Sub-Loop Feeder - Per 4-Wire 19.2 Kbps Digital Grade Loop		1	UDL	USBFN	18.68	100.62	58.16	63.54	14.83		11.90				
		Sub-Loop Feeder - Per 4-Wire 19.2 Kbps Digital Grade Loop		2	UDL	USBFN	25.21	100.62	58.16	63.54	14.83		11.90				
		Sub-Loop Feeder - Per 4-Wire 19.2 Kbps Digital Grade Loop		3	UDL	USBFN	48.71	100.62	58.16	63.54	14.83		11.90				
		Sub-Loop Feeder - Per 4-Wire 56 Kbps Digital Grade Loop - Zone 1		1	UDL	USBFO	18.68	100.62	58.16	63.54	14.83		11.90				

CATEGORY	RATE ELEMENTS	Interim	Zone	BCS	USOC	RATES($) Rec	Nonrecurring First	Nonrecurring Add'l	Nonrecurring Disconnect First	Nonrecurring Disconnect Add'l	Svc Order Submitted Elec per LSR	Svc Order Submitted Manually per LSR	Incremental Charge - Manual Svc Order vs. Electronic-1st	Incremental Charge - Manual Svc Order vs. Electronic-Add'l	Incremental Charge - Manual Svc Order vs. Electronic-Disc 1st	Incremental Charge - Manual Svc Order vs. Electronic-Disc Add'l
											OSS Rates($)					
							First	Add'l	First	Add'l	SOMEC	SOMAN	SOMAN	SOMAN	SOMAN	SOMAN
	Sub-Loop Feeder - Per 4-Wire 56 Kbps Digital Grade Loop - Zone 2		2	UDL	USBFO	25.21	100.62	58.16	63.54	14.83		11.90				
	Sub-Loop Feeder - Per 4-Wire 56 Kbps Digital Grade Loop - Zone 3		3	UDL	USBFO	48.71	100.62	58.16	63.54	14.83		11.90				
	Order Coordination For Specified Time Conversion, per LSR			UDL	OCOSL		23.02									
	Sub-Loop Feeder - Per 4-Wire 64 Kbps Digital Grade Loop - Zone 1		1	UDL	USBFP	18.68	100.62	58.16	63.54	14.83		11.90				
	Sub-Loop Feeder - Per 4-Wire 64 Kbps Digital Grade Loop - Zone 2		2	UDL	USBFP	25.21	100.62	58.16	63.54	14.83		11.90				
	Sub-Loop Feeder - Per 4-Wire 64 Kbps Digital Grade Loop - Zone 3		3	UDL	USBFP	48.71	100.62	58.16	63.54	14.83		11.90				
	Order Coordination For Specified Conversion Time, per LSR			UDL	OCOSL		23.02									
SUB-LOOPS																
Sub-Loop Feeder																
	Sub Loop Feeder - DS3 - Per Mile Per Month	I		UE3	1L5SL	15.69										
	Sub Loop Feeder - DS3 - Facility Termination Per Month	I		UE3	USBF1	347.59	3,386.00	407.15	166.83	94.58		11.90				
	Sub Loop Feeder – STS-1 – Per Mile Per Month	I		UDLSX	1L5SL	15.69										
	Sub Loop Feeder - STS-1 - Facility Termination Per Month	I		UDLSX	USBF7	402.09	3,386.00	407.15	166.83	94.58		11.90				
	Sub Loop Feeder – OC-3 – Per Mile Per Month	I		UDLO3	1L5SL	11.90										
	Sub Loop Feeder - OC-3 - Facility Termination Protection Per Month	I		UDLO3	USBF5	62.98										
	Sub Loop Feeder - OC-3 - Facility Termination Per Month	I		UDLO3	USBF2	547.22	3,386.00	407.15	166.83	94.58		11.90				
	Sub Loop Feeder - OC-12 - Per Mile Per Month	I		UDL12	1L5SL	14.65										
	Sub Loop Feeder - OC-12 - Facility Termination Protection Per Month	I		UDL12	USBF6	502.47										
	Sub Loop Feeder - OC-12 - Facility Termination Per Month	I		UDL12	USBF3	1,577.00	3,386.00	407.15	166.83	94.58		11.90				
	Sub Loop Feeder - OC-48 - Per Mile Per Month	I		UDL48	1L5SL	48.06										
	Sub Loop Feeder - OC-48 - Facility Termination Protection Per Month	I		UDL48	USBF9	251.80										
	Sub Loop Feeder - OC-48 - Facility Termination Per Month	I		UDL48	USBF4	1,589.00	3,572.00	407.15	168.35	95.43		11.90				
	Sub Loop Feeder - OC-12 Interface On OC-48	I		UDL48	USBF8	331.15	788.39	407.15	168.35	95.43		11.90				
UNBUNDLED LOOP CONCENTRATION																
	Unbundled Loop Concentration - System A (TR008)			ULC	UCT8A	449.49	359.42	359.42				11.90				
	Unbundled Loop Concentration - System B (TR008)			ULC	UCT8B	53.44	149.76	149.76				11.90				
	Unbundled Loop Concentration - System A (TR303)			ULC	UCT3A	487.33	359.42	359.42				11.90				
	Unbundled Loop Concentration - System B (TR303)			ULC	UCT3B	90.05	149.76	149.76				11.90				
	Unbundled Loop Concentration - DS1 Loop Interface Card			ULC	UCTCO	5.04	71.70	51.52	18.49	4.82		11.90				
	Unbundled Loop Concentration - ISDN Loop Interface (Brite Card)			UDN	ULCC1	8.00	16.59	16.50	6.77	6.73		11.90				
	Unbundled Loop Concentration - UDC Loop Interface (Brite Card)			UDC	ULCCU	8.00	16.59	16.50	6.77	6.73		11.90				
	Unbundled Loop Concentration - -2 Wire Voice-Loop Start or Ground Start Loop Interface (POTS Card)			UEA	ULCC2	2.00	16.59	16.50	6.77	6.73		11.90				
	Unbundled Loop Concentration - 2 Wire Voice - Reverse Battery Loop Interface (SPOTS Card)			UEA	ULCCR	11.90	16.59	16.50	6.77	6.73		11.90				
	Unbundled Loop Concentration - 4 Wire Voice Loop Interface (Specials Card)			UEA	ULCC4	7.10	16.59	16.50	6.77	6.73		11.90				
	Unbundled Loop Concentration - TEST CIRCUIT Card			ULC	UCTTC	34.68	16.59	16.50	6.77	6.73		11.90				
	Unbundled Loop Concentration - Digital 19.2 Kbps Data Loop Interface			UDL	ULCC7	10.51	16.59	16.50	6.77	6.73		11.90				
	Unbundled Loop Concentration - Digital 56 Kbps Data Loop Interface			UDL	ULCC5	10.51	16.59	16.50	6.77	6.73		11.90				
	Unbundled Loop Concentration - Digital 64 Kbps Data Loop Interface			UDL	ULCC6	10.51	16.59	16.50	6.77	6.73		11.90				
UNE OTHER, PROVISIONING ONLY - NO RATE																
	NID - Dispatch and Service Order for NID installation			UENTW	UNDBX											
	UNTW Circuit Id Establishment, Provisioning Only - No Rate			UENTW	UENCE											
	Unbundled Contract Name, Provisioning Only - No Rate			UEANL,UEF,UEQ,UENTW	UNECN											

UNBUNDLED NETWORK ELEMENTS - Florida														Attachment: 2		Exhibit: B	
CATEGORY		RATE ELEMENTS	Interim	Zone	BCS	USOC	RATES($)					Svc Order Submitted Elec per LSR	Svc Order Submitted Manually per LSR	Incremental Charge - Manual Svc Order vs. Electronic-1st	Incremental Charge - Manual Svc Order vs. Electronic-Add'l	Incremental Charge - Manual Svc Order vs. Electronic-Disc 1st	Incremental Charge - Manual Svc Order vs. Electronic-Disc Add'l
							Rec	Nonrecurring		Nonrecurring Disconnect		OSS Rates($)					
								First	Add'l	First	Add'l	SOMEC	SOMAN	SOMAN	SOMAN	SOMAN	SOMAN
UNE OTHER, PROVISIONING ONLY - NO RATE																	
		Unbundled Contact Name, Provisioning Only - no rate			UAL,UCL,UDC,UDL, UDN,UEA,UHL,ULC	UNECN	0.00	0.00									
		Unbundled Sub-Loop Feeder-2 Wire Cross Box Jumper - no rate			UEA,UDN,UCL,UDC	USBFQ	0.00	0.00									
		Unbundled Sub-Loop Feeder-4 Wire Cross Box Jumper - no rate			UEA,USL,UCL,UDL	USBFR	0.00	0.00									
		Unbundled DS1 Loop - Superframe Format Option - no rate			USL	CCOSF	0.00	0.00									
		Unbundled DS1 Loop - Expanded Superframe Format option - no rate			USL	CCOEF	0.00	0.00									
HIGH CAPACITY UNBUNDLED LOCAL LOOP																	
		High Capacity Unbundled Local Loop - DS3 - Per Mile per month			UE3	1L5ND	10.92										
		High Capacity Unbundled Local Loop - DS3 - Facility Termination per month			UE3	UE3PX	386.88	556.37	343.01	139.13	96.84		11.90				
		High Capacity Unbundled Local Loop - STS-1 - Per Mile per month			UDLSX	1L5ND	10.92										
		High Capacity Unbundled Local Loop - STS-1 - Facility Termination per month			UDLSX	UDLS1	426.60	556.37	343.01	139.13	96.84		11.90			1.83	
LOOP MAKE-UP																	
		Loop Makeup - Preordering Without Reservation, per working or spare facility queried (Manual).			UMK	UMKLW		52.17	52.17								
		Loop Makeup - Preordering With Reservation, per spare facility queried (Manual).			UMK	UMKLP		55.07	55.07								
		Loop Makeup--With or Without Reservation, per working or spare facility queried (Mechanized)			UMK	PSUMK		0.6784	0.6784								
HIGH FREQUENCY SPECTRUM																	
	SPLITTERS-CENTRAL OFFICE BASED																
		Line Sharing Splitter, per System 96 Line Capacity - True up pending approval by PSC	R		ULS	ULSDA	119.72	379.13	0.00	347.90	0.00		11.90				
		Line Sharing Splitter, per System 24 Line Capacity - True up pending approval by PSC	R		ULS	ULSDB	29.93	379.13	0.00	347.90	0.00		11.90				
		Line Sharing Splitter, Per System, 8 Line Capacity	I		ULS	ULSD8	8.33	379.13	0.00	347.90	0.00		11.90				
		Line Sharing-DLEC Owned Splitter in CO-CFA activaton-deactivation (per LSOD) - True up pending approval by PSC			ULS	ULSDG		173.66		97.42			11.90				
	END USER ORDERING-CENTRAL OFFICE BASED-HIGH FREQUENCY SPECTRUM AKA LINE SHARING																
		Line Sharing - per Line Activation - True up pending approval by PSC(BST Owned Splitter)			ULS	ULSDC	0.61	29.68	21.28	19.57	9.61		11.90				
		Line Sharing - per Subsequent Activity per Line Rearrangement - True up pending approval by PSC(BST Owned Splitter)	R		ULS	ULSDS		21.68	16.44				11.90				
		Line Sharing - per Subsequent Activity per Line Rearrangement - True up pending approval by PSC(DLEC Owned Splitter)	R		ULS	ULSCS		21.68	16.44				11.90				
		Line Sharing - per Line Activation (DLEC owned Splitter)	I		ULS	ULSCC	0.61	47.44	19.31	20.67	12.74		11.90				
		Line Splitting - per line activation DLEC owned splitter	I		UEPSR UEPSB	UREOS	0.61										
		Line Splitting - per line activation BST owned - physical	I		UEPSR UEPSB	UREBP	0.638	29.68	21.28	19.57	9.61		11.90				
		Line Splitting - per line activation BST owned - virtual	I		UEPSR UEPSB	UREBV	1.134	29.68	21.28	19.57	9.61		11.90				
UNBUNDLED DEDICATED TRANSPORT																	
	NOTE: INTEROFFICE CHANNEL DEDICATED TRANSPORT - minimum billing period - below DS3=one month, DS3/STS-1=four months																
	INTEROFFICE CHANNEL - DEDICATED TRANSPORT																
		Interoffice Channel - Dedicated Transport - 2-Wire Voice Grade - Per Mile per month			U1TVX	1L5XX	0.0091										
		Interoffice Channel - Dedicated Transport- 2- Wire Voice Grade - Facility Termination per month			U1TVX	U1TV2	25.32	47.35	31.78	18.31	7.03		11.90				
		Interoffice Channel - Dedicated Transpor t- 2-Wire Voice Grade Rev Bat. - Per Mile per month			U1TVX	1L5XX	0.0091										

CATEGORY	RATE ELEMENTS	Interim	Zone	BCS	USOC	RATES($) Rec	Nonrecurring First	Nonrecurring Add'l	Nonrecurring Disconnect First	Nonrecurring Disconnect Add'l	Svc Order Submitted Elec per LSR	Svc Order Submitted Manually per LSR	Incremental Charge - Manual Svc Order vs. Electronic-1st	Incremental Charge - Manual Svc Order vs. Electronic-Add'l	Incremental Charge - Manual Svc Order vs. Electronic-Disc 1st	Incremental Charge - Manual Svc Order vs. Electronic-Disc Add'l
											OSS Rates($)					
											SOMEC	SOMAN	SOMAN	SOMAN	SOMAN	SOMAN
	Interoffice Channel - Dedicated Transport- 2- Wire VG Rev Bat. - Facility Termination per month			U1TVX	U1TR2	25.32	47.35	31.78	18.31	7.03		11.90				
	Interoffice Channel - Dedicated Transport - 4-Wire Voice Grade - Per Mile per month			U1TVX	1L5XX	0.0091										
	Interoffice Channel - Dedicated Transport - 4- Wire Voice Grade - Facility Termination per month			U1TVX	U1TV4	22.58	47.35	31.78	18.31	7.03		11.90				
	Interoffice Channel - Dedicated Transport - 56 kbps - per mile per month			U1TDX	1L5XX	0.0091										
	Interoffice Channel - Dedicated Transport - 56 kbps - Facility Termination per month			U1TDX	U1TD5	18.44	47.35	31.78	18.31	7.03		11.90				
	Interoffice Channel - Dedicated Transport - 64 kbps - per mile per month			U1TDX	1L5XX	0.0091										
	Interoffice Channel - Dedicated Transport - 64 kbps - Facility Termination per month			U1TDX	U1TD6	18.44	47.35	31.78	18.31	7.03		11.90				
	Interoffice Channel - Dedicated Channel - DS1 - Per Mile per month			U1TD1	1L5XX	0.1856										
	Interoffice Channel - Dedicated Tranport - DS1 - Facility Termination per month			U1TD1	U1TF1	88.44	105.54	98.47	21.47	19.05		11.90				
	Interoffice Channel - Dedicated Transport - DS3 - Per Mile per month			U1TD3	1L5XX	3.87										
	Interoffice Channel - Dedicated Transport - DS3 - Facility Termination per month			U1TD3	U1TF3	1,071.00	335.46	219.28	72.03	70.56		11.90				
	Interoffice Channel - Dedicated Transport - STS-1 - Per Mile per month			U1TS1	1L5XX	3.87										
	Interoffice Channel - Dedicated Transport - STS-1 - Facility Termination per month			U1TS1	U1TFS	1,056.00	335.46	219.28	72.03	70.56		11.90				
	LOCAL CHANNEL - DEDICATED TRANSPORT															
	NOTE: LOCAL CHANNEL DEDICATED TRANSPORT - minimum billing period - below DS3=one month, DS3/STS-1=four months															
	Local Channel - Dedicated - 2-Wire Voice Grade per month - Zone 1		1	ULDVX	ULDV2	21.94	265.84	46.97	37.63	4.00		11.90				
	Local Channel - Dedicated - 2-Wire Voice Grade per month - Zone 2		2	ULDVX	ULDV2	29.62	265.84	46.97	37.63	4.00		11.90				
	Local Channel - Dedicated - 2-Wire Voice Grade per month - Zone 3		3	UNDVX	ULDV2	57.22	265.84	46.97	37.63	4.00		11.90				
	Local Channel - Dedicated - 2-Wire Voice Grade Rev. Bat. Per month - Zone 1		1	ULDVX	ULDR2	21.94	265.84	46.97	37.63	4.00		11.90				
	Local Channel - Dedicated - 2-Wire Voice Grade Rev. Bat. Per Month - Zone 2		2	ULDVX	ULDR2	29.62	265.84	46.97	37.63	4.00		11.90				
	Local Channel - Dedicated - 2-Wire Voice Grade Rev. Bat. Per Month - Zone 3		3	ULDVX	ULDR2	57.22	265.84	46.97	37.63	4.00		11.90				
	Local Channel - Dedicated - 4-Wire Voice Grade per month - Zone 1		1	UNDVX	ULDV4	22.81	266.54	47.67	44.22	5.33		11.90				
	Local Channel - Dedicated - 4-Wire Voice Grade per month - Zone 2		2	UNDVX	ULDV4	30.79	266.54	47.67	44.22	5.33		11.90				
	Local Channel - Dedicated - 4-Wire Voice Grade per month - Zone 3		3	UNDVX	ULDV4	59.48	266.54	47.67	44.22	5.33		11.90				
	Local Channel - Dedicated - DS1 per month - Zone 1		1	ULDD1	ULDF1	35.28	216.65	183.54	24.30	16.95		11.90				
	Local Channel - Dedicated - DS1 per month - Zone 2		2	ULDD1	ULDF1	47.63	216.65	183.54	24.30	16.95		11.90				
	Local Channel - Dedicated - DS1 per month - Zone 3		3	ULDD1	ULDF1	92.01	216.65	183.54	24.30	16.95		11.90				
	Local Channel - Dedicated - DS3 - Per Mile per month			ULDD3	1L5NC	8.50										
	Local Channel - Dedicated - DS3 - Facility Termination per month			ULDD3	ULDF3	531.91	556.37	343.01	139.13	96.84		11.90				
	Local Channel - Dedicated - STS-1- Per Mile per month			ULDS1	1L5NC	8.50										
	Local Channel - Dedicated - STS-1 - Facility Termination per month			ULDS1	ULDFS	540.69	556.37	343.01	139.13	96.84		11.90				
MULTIPLEXERS																
	Channelization - DS1 to DS0 Channel System			UXTD1	MQ1	146.77	101.42	71.62	11.09	10.49		11.90				
	OCU-DP COCI (data) - DS1 to DS0 Channel System - per month (2.4-64kbs)			UDL	1D1DD	2.10	10.07	7.08				11.90				

CATEGORY	RATE ELEMENTS	Interim	Zone	BCS	USOC	RATES($) Rec	Nonrecurring First	Nonrecurring Add'l	Nonrecurring Disconnect First	Nonrecurring Disconnect Add'l	Svc Order Submitted Elec per LSR	Svc Order Submitted Manually per LSR	Incremental Charge - Manual Svc Order vs. Electronic-1st	Incremental Charge - Manual Svc Order vs. Electronic-Add'l	Incremental Charge - Manual Svc Order vs. Electronic-Disc 1st	Incremental Charge - Manual Svc Order vs. Electronic-Disc Add'l
											OSS Rates($)					
											SOMEC	SOMAN	SOMAN	SOMAN	SOMAN	SOMAN
	2-wire ISDN COCI (BRITE) - DS1 to DS0 Channel Systsem - per month			UDN	UC1CA	3.66	10.07	7.08				11.90				
	Voice Grade COCI - DS1 to DS0 Channel System - per month			UEA	1D1VG	1.38	10.07	7.08				11.90				
	DS3 to DS1 Channel System per month			UXTD3	MQ3	211.19	199.28	118.64	40.34	39.07		11.90				
	STS1 to DS1 Channel System per month			UXTS1	MQ3	211.19	199.28	118.64	40.34	39.07		11.90				
	DS3 Interface Unit (DS1 COCI) used with Loop per month			USL	UC1D1	13.76	10.07	7.08				11.90				
	DS3 Interface Unit (DS1 COCI) used with Local Channel per month			ULDD1	UC1D1	13.76	10.07	7.08				11.90				
	DS3 Interface Unit (DS1 COCI) used with Interoffice Channel per month			U1TD1	UC1D1	13.76	10.07	7.08				11.90				
DARK FIBER																
	Dark Fiber, Four Fiber Strands, Per Route Mile or Fraction Thereof per month - Local Channel			UDF	1L5DC	55.04										
	NRC Dark Fiber - Local Channel			UDF	UDFC4		751.34	193.88	356.21	230.11		11.90				
	Dark Fiber, Four Fiber Strands, Per Route Mile or Fraction Thereof per month - Interoffice Channel			UDF	1L5DF	26.85										
	NRC Dark Fiber - Interoffice Channel			UDF	UDF14		751.34	193.88	356.21	230.11		11.90				
	Dark Fiber, Four Fiber Strands, Per Route Mile or Fraction Thereof per month - Local Loop			UDF	1L5DL	55.04										
	NRC Dark Fiber - Local Loop			UDF	UDFL4		751.34	193.88	356.21	230.11		11.90				
TRANSPORT OTHER																
	Optional Features & Functions:															
8XX ACCESS TEN DIGIT SCREENING																
	8XX Access Ten Digit Screening, Per Call			OHD		0.0006252										
	8XX Access Ten Digit Screening, Reservation Charge Per 8XX Number Reserved			OHD	N8R1X		4.15	0.70				11.90				
	8XX Access Ten Digit Screening, Per 8XX No. Established W/O POTS Translations			OHD			8.78	1.18	5.77	0.70		11.90				
	8XX Access Ten Digit Screening, Per 8XX No. Established With POTS Translations			OHD	N8FTX		8.78	1.18	5.77	0.70		11.90				
	8XX Access Ten Digit Screening, Customized Area of Service Per 8XX Number			OHD	N8FCX		4.15	2.07				11.90				
	8XX Access Ten Digit Screening, Multiple InterLATA CXR Routing Per CXR Requested Per 8XX No.			OHD	N8FMX		4.85	2.78				11.90				
	8XX Access Ten Digit Screening, Change Charge Per Request			OHD	N8FAX		4.85	0.70				11.90				
	8XX Access Ten Digit Screening, Call Handling and Destination Features			OHD	N8FDX		4.15	4.15				11.90				
	8XX Access Ten Digit Screening, w/ 8FL No. Delivery, per query			OHD		0.0006252										
	8XX Access Ten Digit Screening, w/ POTS No. Delivery, per query			OHD		0.0006252										
LINE INFORMATION DATA BASE ACCESS (LIDB)																
	LIDB Common Transport Per Query			OQT		0.0000203										
	LIDB Validation Per Query			OQU		0.0136959										
	LIDB Originating Point Code Establishment or Change			OQT, OQU	NRPBX		55.13	55.13	55.13	55.13		11.90				
SIGNALING (CCS7)																
	CCS7 Signaling Termination, Per STP Port			UDB	PT8SX	135.05										
	CCS7 Signaling Usage, Per TCAP Message			UDB		0.0000607										
	CCS7 Signaling Connection, Per link (A link)			UDB	TPP++	17.93	43.57	43.57	18.31	18.31		11.90				
	CCS7 Signaling Connection, Per link (B link) (also known as D link)			UDB	TPP++	17.93	43.57	43.57	18.31	18.31		11.90				
	CCS7 Signaling Usage, Per ISUP Message			UDB		0.0000152										
	CCS7 Signaling Usage Surrogate, per link per LATA			UDB	STU56	694.32										
	CCS7 Signaling Point Code, per Originating Point Code Establishment or Change, per STP affected			UDB	CCAPO		46.03	46.03	46.03	46.03		11.90				
E911 SERVICE																
	Local Channel - Dedicated - 2-wr Voice Grade - Zone 1					21.94	265.84	46.97	37.63	4.00		11.90				
	Local Channel - Dedicated - 2-wr Voice Grade - Zone 2					29.62	265.84	46.97	37.63	4.00		11.90				
	Local Channel - Dedicated - 2-wr Voice Grade - Zone 3					57.22	265.84	46.97	37.63	4.00		11.90				

UNBUNDLED NETWORK ELEMENTS - Florida														Attachment: 2		Exhibit: B	
CATEGORY		RATE ELEMENTS	Interim	Zone	BCS	USOC	RATES($)					Svc Order Submitted Elec per LSR	Svc Order Submitted Manually per LSR	Incremental Charge - Manual Svc Order vs. Electronic-1st	Incremental Charge - Manual Svc Order vs. Electronic-Add'l	Incremental Charge - Manual Svc Order vs. Electronic-Disc 1st	Incremental Charge - Manual Svc Order vs. Electronic-Disc Add'l
							Rec	Nonrecurring		Nonrecurring Disconnect		OSS Rates($)					
								First	Add'l	First	Add'l	SOMEC	SOMAN	SOMAN	SOMAN	SOMAN	SOMAN
		Interoffice Transport - Dedicated - 2-wr Voice Grade Per Mile					0.0091										
		Interoffice Transport - Dedicated - 2-wr Voice Grade Per Facility Termination					25.32	47.35	31.78	18.31	7.03		11.90				
		Local Channel - Dedicated - DS1 - Zone 1					35.28	216.65	183.54	21.47	19.05		11.90				
		Local Channel - Dedicated - DS1 - Zone 2					47.63	216.65	183.54	21.47	19.05		11.90				
		Local Channel - Dedicated - DS1 - Zone 3					92.01	216.65	183.54	21.47	19.05		11.90				
		Interoffice Transport - Dedicated - DS1 Per Mile					0.1856										
		Interoffice Transport - Dedicated - DS1 Per Facility Termination					88.44	105.54	98.47	21.47	19.05		11.90				
CALLING NAME (CNAM) SERVICE																	
		CNAM for DB Owners, Per Query			OQV		0.001024										
		CNAM for Non DB Owners, Per Query			OQV		0.001024										
		CNAM For DB Owners - Service Establishment			OQV			25.35	25.35	19.01	19.01		11.90				
		CNAM For Non DB Owners - Service Establishment			OQV			25.35	25.35	19.01	19.01		11.90				
		CNAM For DB Owners - Service Provisioning With Point Code Establishment			OQV			1,592.00	1,177.00	352.36	259.09		11.90				
		CNAM For Non DB Owners - Service Provisioning With Point Code Establishment			OQV			546.51	393.82	358.06	259.09		11.90				
LNP Query Service																	
		LNP Charge Per query			OQV		0.000852										
		LNP Service Establishment Manual						13.83	13.83	12.71	12.71		11.90				
		LNP Service Provisioning with Point Code Establishment						655.50	334.88	297.03	218.40		11.90				
OPERATOR CALL PROCESSING																	
		Oper. Call Processing - Oper. Provided, Per Min. - Using BST LIDB					1.20										
		Oper. Call Processing - Oper. Provided, Per Min. - Using Foreign LIDB					1.24										
		Oper. Call Processing - Fully Automated, per Call - Using BST LIDB					0.20										
		Oper. Call Processing - Fully Automated, per Call - Using Foreign LIDB					0.20										
INWARD OPERATOR SERVICES																	
		Inward Operator Services - Verification, Per Call					1.00										
		Inward Operator Services - Verification and Emergency Interrupt - Per Call					1.95										
BRANDING - OPERATOR CALL PROCESSING																	
		Recording of Custom Branded OA Announcement				CBAOS		7,000.00	7,000.00				11.90				
		Loading of Custom Branded OA Announcement per shelf/NAV				CBAOL		500.00	500.00				11.90				
	Unbranding via OLNS for UNEP CLEC																
		Loading of OA per OCN (Regional)						1,200.00	1,200.00				11.90				
DIRECTORY ASSISTANCE SERVICES																	
	DIRECTORY ASSISTANCE ACCESS SERVICE																
		Directory Assistance Access Service Calls, Charge Per Call					0.275										
	DIRECTORY ASSISTANCE CALL COMPLETION ACCESS SERVICE (DACC)																
		Directory Assistance Call Completion Access Service (DACC), Per Call Attempt					0.10										
	DIRECTORY TRANSPORT																
DIRECTORY ASSISTANCE SERVICES																	
	DIRECTORY ASSISTANCE DATA BASE SERVICE (DADS)																
		Directory Assistance Data Base Service Charge Per Listing					0.04										
		Directory Assistance Data Base Service, per month				DBSOF	150.00										
BRANDING - DIRECTORY ASSISTANCE																	
	Facility Based CLEC																
		Recording and Provisioning of DA Custom Branded Announcement			AMT	CBADA		6,000.00	6,000.00								
		Loading of Custom Branded Announcement per DRAM Card/Switch			AMT	CBADC		1,170.00	1,170.00								
	UNEP CLEC																
		Recording of DA Custom Branded Announcement						3,000.00	3,000.00								

CATEGORY	RATE ELEMENTS	Interim	Zone	BCS	USOC	RATES($) Rec	Nonrecurring First	Nonrecurring Add'l	Nonrecurring Disconnect First	Nonrecurring Disconnect Add'l	Svc Order Submitted Elec per LSR SOMEC	Svc Order Submitted Manually per LSR SOMAN	OSS Rates($) Incremental Charge - Manual Svc Order vs. Electronic-1st SOMAN	Incremental Charge - Manual Svc Order vs. Electronic-Add'l SOMAN	Incremental Charge - Manual Svc Order vs. Electronic-Disc 1st SOMAN	Incremental Charge - Manual Svc Order vs. Electronic-Disc Add'l SOMAN
	Loading of DA Custom Branded Announcement per DRAM Card/Switch per OCN						1,170.00	1,170.00								
	Unbranding via OLNS for UNEP CLEC															
	Loading of DA per OCN (1 OCN per Order)						420.00	420.00								
	Loading of DA per Switch per OCN						16.00	16.00								
SELECTIVE ROUTING																
	Selective Routing Per Unique Line Class Code Per Request Per Switch				USRCR		93.55	93.55	12.71	12.71		11.90				
VIRTUAL COLLOCATION																
	Virtual Collocation - Application Cost			AMTFS	EAF		4,122.00	1,249.00								
	Virtual Collocation - Cable Installation Cost, per cable			AMTFS	ESPCX	12.45	965.00									
	Virtual Collocation - Floor Space, per sq. ft.			AMTFS	ESPVX	4.25										
	Virtual Collocation - Power, per breaker amp			AMTFS	ESPAX	6.95										
	Virtual Collocation - Cable Support Structure, per entrance cable			AMTFS	ESPSX	13.35										
	Virtual Collocation - 2-wire Cross Connects (loop)			UEANL,UEA,UDN,UDC,UAL,UHL,UCL,UEQ, AMTFS, UDL, UNCVX, UNCDX, UNCNX	UEAC2	0.0502	11.57	11.57				11.90				
	Virtual Collocation - 4-wire Cross Connects (loop)			UEA,UHL,UCL,UDL, AMTFS, UAL, UDN, UNCVX, UNCDX	UEAC4	0.0502	11.57	11.57				11.90				
	Virtual Collocation - 2-Fiber Cross Connects			AMTFS,UDL12, UDLO3, U1T48, U1T12, U1T03, ULDO3, ULD12, ULD48, UDF	CNC2F	6.71	2,431.00					11.90				
	Virtual Collocation - 4-Fiber Cross Connects			AMTFS,UDL12, UDLO3, U1T48, U1T12, U1T03, ULDO3, ULD12, ULD48, UDF	CNC4F	6.71	2,431.00					11.90				
	Virtual collocation - DS1 Cross Connects			USL,ULC,AMTFS, ULR, UXTD1, UNC1X, ULDD1, U1TD1, USLEL, UNLD1	CNC1X	7.50	155.00	14.00				11.90				
	Virtual collocation - DS3 Cross Connects			USL,ULC,AMTFS,UE3, U1TD3, UXTS1, UXTD3, UNC3X, UNCSX, ULDD3, U1TS1, ULDS1, UDLSX, UNLD3	CND3X	56.25	151.90	11.83				11.90				
	Virtual Collocation - Co-Carrier Cross Connects - Fiber Cable Support Structure, per linear foot			AMTFS,CLO	VE1CB	0.0028										
	Virtual Collocation - Co-Carrier Cross Connects - Copper/Coax Cable Support Structure, per linear ft			AMTFS, CLO	VE1CD	0.0041										
	Virtual Collocation - Co-Carrier Cross Connects - Fiber Cable Support Structure,per cable			AMTFS	VE1CC		535.54									
	Virtual Collocation - Co-Carrier Cross Connects - Copper/Coax Cable Support Structure, per cable			AMTFS	VE1CE		535.54									
	Virtual collocation - Security Escort - Basic, per quarter hour			AMTFS	SPTBQ		10.89									
	Virtual collocation - Security Escort - Overtime, per quarter hour			AMTFS	SPTOQ		13.64									
	Virtual collocation - Security Escort - Premium, per quarter hour			AMTFS	SPTPQ		16.40									

UNBUNDLED NETWORK ELEMENTS - Florida														Attachment: 2		Exhibit: B	
CATEGORY		RATE ELEMENTS	Interim	Zone	BCS	USOC	RATES($)					Svc Order Submitted Elec per LSR	Svc Order Submitted Manually per LSR	Incremental Charge - Manual Svc Order vs. Electronic-1st	Incremental Charge - Manual Svc Order vs. Electronic-Add'l	Incremental Charge - Manual Svc Order vs. Electronic-Disc 1st	Incremental Charge - Manual Svc Order vs. Electronic-Disc Add'l
							Rec	Nonrecurring		Nonrecurring Disconnect		OSS Rates($)					
								First	Add'l	First	Add'l	SOMEC	SOMAN	SOMAN	SOMAN	SOMAN	SOMAN
		Virtual Collocation - DS-1/DCS Cross Connects, PER 28 CKTS			AMTFS	VE11S	226.39	1,950.00									
		Virtual Collocation - DS-1.DSX Cross Connects, PER 28 CKTS			AMTFS	VE11X	11.51	1,950.00									
		Virtual Collocation - DS-3/DCS Cross Connects, PER CKT			AMTFS	VE13S	56.97	528.00									
		Virtual Collocation - DS-3/DSC Cross Connects, PER CKT			AMTFS	VE13X	10.06	528.00									
		Virtual collocation - Maintenance in CO - Basic, per quarter hour			AMTFS	SPTRE		10.89									
		Virtual collocation - Maintenance in CO - Overtime, per quarter hour			AMTFS	SPTOE		13.64									
		Virtual collocation - Maintenance in CO - Premium per quarter hour			AMTFS	SPTPE		16.40									
VIRTUAL COLLOCATION																	
		Virtual Collocation - 2-wire Cross Connect, Exchange Port 2-Wire Analog - Res			UEPSR	VE1R2	0.524	11.57	11.57				11.90				
		Virtual Collocation 2-Wire Cross Connect, Exchange Port 2-Wire Line Side PBX Trunk - Bus			UEPSP	VE1R2	0.524	11.57	11.57				11.90				
		Virtual Collocation 2-Wire Cross Connect, Exchange Port 2-Wire Voice Grade PBX Trunk - Res			UEPSE	VE1R2	0.524	11.57	11.57				11.90				
		Virtual Collocation 2-Wire Cross Connect, Exchange Port 2-Wire Analog Bus			UEPSB	VE1R2	0.524	11.57	11.57				11.90				
		Virtual Collocation 2-Wire Cross Connect, Exchnage Port 2-Wire ISDN			UEPSX	VE1R2	0.524	11.57	11.57				11.90				
		Virtual Collocation 2-Wire Cross Connect, Exchange Port 2-Wire ISDN			UEPTX	VE1R2	0.524	11.57	11.57				11.90				
		Virtual Collocation 4-Wire Cross Connect, Exchange Port 4-Wire ISDN DS1			UEPEX	VE1R4	0.524	11.57	11.57				11.90				
VIRTUAL COLLOCATION																	
		Virtual Collocation-2 Wire Cross Connects (Loop) for Line Splitting			UEPSR, UEPSB	VE1LS	0.0297	33.86	31.95				11.90				
AIN SELECTIVE CARRIER ROUTING																	
		Regional Service Establishment			SRC	SRCEC		193,444.00		7,737.00			11.90				
		End Office Establishment			SRC	SRCEO		187.36	187.36	0.69	0.69		11.90				
		Query NRC, per query			SRC		0.0031868										
AIN - BELLSOUTH AIN SMS ACCESS SERVICE																	
		AIN SMS Access Service - Service Establishment, Per State, Initial Setup			A1N	CAMSE		43.56	43.56	44.93	44.93		11.90				
		AIN SMS Access Service - Port Connection - Dial/Shared Access			A1N	CAMDP		8.64	8.64	10.03	10.03		11.90				
		AIN SMS Access Service - Port Connection - ISDN Access			A1N	CAM1P		8.64	8.64	10.03	10.03		11.90				
		AIN SMS Access Service - User Identification Codes - Per User ID Code			A1N	CAMAU		38.66	38.66	29.88	29.88		11.90				
		AIN SMS Access Service - Security Card, Per User ID Code, Initial or Replacement			A1N	CAMRC		75.10	75.10	12.93	12.93		11.90				
		AIN SMS Access Service - Storage, Per Unit (100 Kilobytes)					0.0028										
		AIN SMS Access Service - Session, Per Minute					0.7809										
		AIN SMS Access Service - Company Performed Session, Per Minute					0.4609										
AIN - BELLSOUTH AIN TOOLKIT SERVICE																	
		AIN Toolkit Service - Service Establishment Charge, Per State, Initial Setup			CAM	BAPSC		43.56	43.56	44.93	44.93		11.90				
		AIN Toolkit Service - Training Session, Per Customer				BAPVX		8,439.00	8,439.00				11.90				
		AIN Toolkit Service - Trigger Access Charge, Per Trigger, Per DN, Term. Attempt				BAPTT		8.64	8.64	10.03	10.03		11.90				
		AIN Toolkit Service - Trigger Access Charge, Per Trigger, Per DN, Off-Hook Delay				BAPTD		8.64	8.64	10.03	10.03		11.90				
		AIN Toolkit Service - Trigger Access Charge, Per Trigger, Per DN, Off-Hook Immediate				BAPTM		8.64	8.64	10.03	10.03		11.90				

CATEGORY	RATE ELEMENTS	Interim	Zone	BCS	USOC	RATES($) Rec	Nonrecurring First	Nonrecurring Add'l	Nonrecurring Disconnect First	Nonrecurring Disconnect Add'l	Svc Order Submitted Elec per LSR	Svc Order Submitted Manually per LSR	Incremental Charge - Manual Svc Order vs. Electronic-1st	Incremental Charge - Manual Svc Order vs. Electronic-Add'l	Incremental Charge - Manual Svc Order vs. Electronic-Disc 1st	Incremental Charge - Manual Svc Order vs. Electronic-Disc Add'l
											OSS Rates($)					
											SOMEC	SOMAN	SOMAN	SOMAN	SOMAN	SOMAN
	AIN Toolkit Service - Trigger Access Charge, Per Trigger, Per DN, 10-Digit PODP				BAPTO		38.06	38.06	15.86	15.86		11.90				
	AIN Toolkit Service - Trigger Access Charge, Per Trigger, Per DN, CDP				BAPTC		38.06	38.06	15.86	15.86		11.90				
	AIN Toolkit Service - Trigger Access Charge, Per Trigger, Per DN, Feature Code				BAPTF		38.06	38.06	15.86	15.86		11.90				
	AIN Toolkit Service - Query Charge, Per Query					0.0535927										
	AIN Toolkit Service - Type 1 Node Charge, Per AIN Toolkit Subscription, Per Node, Per Query					0.0063698										
	AIN Toolkit Service - SCP Storage Charge, Per SMS Access Account, Per 100 Kilobytes					0.06										
	AIN Toolkit Service - Monthly report - Per AIN Toolkit Service Subscription			CAM	BAPMS	8.34	8.64	8.64	6.08	6.08		11.90				
	AIN Toolkit Service - Special Study - Per AIN Toolkit Service Subscription			CAM	BAPLS	3.73	9.56	9.56				11.90				
	AIN Toolkit Service - Call Event Report - Per AIN Toolkit Service Subscription			CAM	BAPDS	4.73	8.64	8.64	6.08	6.08		11.90				
	AIN Toolkit Service - Call Event Special Study - Per AIN Toolkit Service Subscription			CAM	BAPES	0.12	9.56	9.56				11.90				
ENHANCED EXTENDED LINK (EELs)																
	NOTE: New EELs available in GA, TN, KY, LA, MS, & SC and density zone 1 of following MSAs: Orlando, FL; Miami, FL; Ft. Lauderdale, FL;															
	NOTE: Charlotte-Gastonia-Rockhill, NC; Greensboro-Winston Salem-High Point, NC. Use all rates below except Switch As Is Charge.															
	NOTE: In all states, EEL network elements shown below also apply to currently combined facilities which are converted to UNE rates. A Switch As Is Charge applies to currently combined facilities converted to UNEs.(Non-recurring rates do not apply.)															
	NOTE: In GA, TN, KY, LA, MS & SC the EEL network elements apply to ordinarily combined network elements.(No Switch As Is Charge.)															
	2-WIRE VOICE GRADE EXTENDED LOOP WITH DEDICATED DS1 INTEROFFICE TRANSPORT (EEL)															
	First 2-Wire VG Loop(SL2) in a DS1 Interofficed Transport Combination - Zone 1		1	UNCVX	UEAL2	14.50	127.59	60.54	48.00	6.31		11.90				
	First 2-Wire VG Grade Loop(SL2) in a DS1 Interofficed Transport Combination - Zone 2		2	UNCVX	UEAL2	19.57	127.59	60.54	48.00	6.31		11.90				
	First 2-Wire VG Grade Loop(SL2) in a DS1 Interofficed Transport Combination - Zone 3		3	UNCVX	UEAL2	37.82	127.59	60.54	48.00	6.31		11.90				
	Interoffice Transport - Dedicated - DS1 combination - Per Mile per month			UNC1X	1L5XX	0.1856										
	Interoffice Transport - Dedicated - DS1 combination - Facility Termination per month			UNC1X	U1TF1	88.44	174.46	122.46	45.61	17.95		11.90				
	DS1 Channelization System Per Month			UNC1X	MQ1	146.77	57.28	14.74	1.50	1.34		11.90				
	Voice Grade COCI - DS1 To Ds0 Interface - Per Month			UNCVX	1D1VG	1.38	6.71	4.84				11.90				
	Each Additional 2-Wire VG Loop(SL 2) in the same DS1 Interoffice Transport Combination - Zone 1		1	UNCVX	UEAL2	14.50	127.59	60.54	48.00	6.31		11.90				
	Each Additional 2-Wire VG Loop(SL2) in the same DS1 Interoffice Transport Combination - Zone 2		2	UNCVX	UEAL2	19.57	127.59	60.54	48.00	6.31		11.90				
	Each Additional 2-Wire VG Loop(SL2) in the same DS1 Interoffice Transport Combination - Zone 3		3	UNCVX	UEAL2	37.82	127.59	60.54	48.00	6.31		11.90				
	Voice Grade COCI - DS1 to DS0 Channel System combination - per month			UNCVX	1D1VG	1.38	6.71	4.84				11.90				
	Nonrecurring Currently Combined Network Elements Switch -As-Is Charge			UNC1X	UNCCC		8.98	8.98	8.98	8.98		11.90				
	4-WIRE VOICE GRADE EXTENDED LOOP WITH DEDICATED DS1 INTEROFFICE TRANSPORT (EEL)															
	First 4-Wire Analog Voice Grade Loop in a DS1 Interoffice Transport Combination - Zone 1		1	UNCVX	UEAL4	23.02	127.59	60.54	48.00	6.31		11.90				
	First 4-Wire Analog Voice Grade Loop in a DS1 Interoffice Transport Combination - Zone 2		2	UNCVX	UEAL4	31.07	127.59	60.54	48.00	6.31		11.90				
	First 4-Wire Analog Voice Grade Loop in a DS1 Interoffice Transport Combination - Zone 3		3	UNCVX	UEAL4	60.02	127.59	60.54	48.00	6.31		11.90				
	Interoffice Transport - Dedicated - DS1 combination - Per Mile Per Month			UNC1X	1L5XX	0.1856										
	Interoffice Transport - Dedicated - DS1 - Facility Termination Per Month			UNC1X	U1TF1	88.44	174.46	122.46	45.61	17.95		11.90				

CATEGORY	RATE ELEMENTS	Interim	Zone	BCS	USOC	RATES($)					Svc Order Submitted Elec per LSR	Svc Order Submitted Manually per LSR	Incremental Charge - Manual Svc Order vs. Electronic-1st	Incremental Charge - Manual Svc Order vs. Electronic-Add'l	Incremental Charge - Manual Svc Order vs. Electronic-Disc 1st	Incremental Charge - Manual Svc Order vs. Electronic-Disc Add'l
						Rec	Nonrecurring		Nonrecurring Disconnect		OSS Rates($)					
							First	Add'l	First	Add'l	SOMEC	SOMAN	SOMAN	SOMAN	SOMAN	SOMAN
	Channelization - Channel System DS1 to DS0 combination Per Month			UNC1X	MQ1	146.77	57.28	14.74	1.50	1.34		11.90				
	Voice Grade COCI - DS1 to DS0 Channel System combination - per month			UNCVX	1D1VG	1.38	6.71	4.84				11.90				
	Additional 4-Wire Analog Voice Grade Loop in same DS1 Interoffice Transport Combination - Zone 1		1	UNCVX	UEAL4	23.02	127.59	60.54	48.00	6.31		11.90				
	Additional 4-Wire Analog Voice Grade Loop in same DS1 Interoffice Transport Combination - Zone 2		2	UNCVX	UEAL4	31.07	127.59	60.54	48.00	6.31		11.90				
	Additional 4-Wire Analog Voice Grade Loop in same DS1 Interoffice Transport Combination - Zone 3		3	UNCVX	UEAL4	60.02	127.59	60.54	48.00	6.31		11.90				
	Voice Grade COCI - DS1 to DS0 Channel System combination - per month			UNCVX	1D1VG	1.38	6.71	4.84				11.90				
	Nonrecurring Currently Combined Network Elements Switch -As-Is Charge			UNC1X	UNCCC		8.98	8.98	8.98	8.98		11.90				
4-WIRE 56 KBPS EXTENDED DIGITAL LOOP WITH DEDICATED DS1 INTEROFFICE TRANSPORT (EEL)																
	First 4-Wire 56Kbps Digital Grade Loop in a DS1 Interoffice Transport Combination - Zone 1		1	UNCDX	UDL56	26.39	127.59	60.54	48.00	6.31		11.90				
	First 4-wire 56Kbps Digital Grade Loop in a DS1 Interoffice Transport Combination - Zone 2		2	UNCDX	UDL56	35.62	127.59	60.54	48.00	6.31		11.90				
	First 4-Wire 56Kbps Digital Grade Loop in a DS1 Interoffice Transport Combination - Zone 3		3	UNCDX	UDL56	68.82	127.59	60.54	48.00	6.31		11.90				
	Interoffice Transport - Dedicated - DS1 combination - Per Mile Per Month			UNC1X	1L5XX	0.1856										
	Interoffice Transport - Dedicated - DS1 - combination Facility Termination Per Month			UNC1X	U1TF1	88.44	174.46	122.46	45.61	17.95		11.90				
	Channelization - Channel System DS1 to DS0 combination Per Month			UNC1X	MQ1	146.77	57.28	14.74	1.50	1.34		11.90				
	OCU-DP COCI (data) - DS1 to DS0 Channel System - per month (2.4-64kbs)			UNCDX	1D1DD	2.10	6.71	4.84				11.90				
	Additional 4-Wire 56Kbps Digital Grade Loopin same DS1 Interoffice Transport Combination - Zone 1		1	UNCDX	UDL56	26.39	127.59	60.54	48.00	6.31		11.90				
	Additional 4-Wire 56Kbps Digital Grade Loopin same DS1 Interoffice Transport Combination - Zone 2		2	UNCDX	UDL56	35.62	127.59	60.54	48.00	6.31		11.90				
	Additional 4-Wire 56Kbps Digital Grade Loopin same DS1 Interoffice Transport Combination - Zone 3		3	UNCDX	UDL56	68.82	127.59	60.54	48.00	6.31		11.90				
	OCU-DP COCI (data) - DS1 to DS0 Channel System - combination per month (2.4-64kbs)			UNCDX	1D1DD	2.10	6.71	4.84				11.90				
	Nonrecurring Currently Combined Network Elements Switch -As-Is Charge			UNC1X	UNCCC		8.98	8.98	8.98	8.98		11.90				
4-WIRE 64 KBPS EXTENDED DIGITAL LOOP WITH DEDICATED DS1 INTEROFFICE TRANSPORT (EEL)																
	First 4-Wire 64Kbps Digital Grade Loop in a DS1 Interoffice Transport Combination - Zone 1		1	UNCDX	UDL64	26.39	127.59	60.54	48.00	6.31		11.90				
	First 4-Wire 64Kbps Digital Grade Loop in a DS1 Interoffice Transport Combination - Zone 2		2	UNCDX	UDL64	35.62	127.59	60.54	48.00	6.31		11.90				
	First 4-Wire 64Kbps Digital Grade Loop in a DS1 Interoffice Transport Combination - Zone 3		3	UNCDX	UDL64	68.82	127.59	60.54	48.00	6.31		11.90				
	Interoffice Transport - Dedicated - DS1 combination - Per Mile Per Month			UNC1X	1L5XX	0.1856										
	Interoffice Transport - Dedicated - DS1 combination - Facility Termination Per Month			UNC1X	U1TF1	88.44	174.46	122.46	45.61	17.95		11.90				
	Channelization - Channel System DS1 to DS0 combination Per Month			UNC1X	MQ1	146.77	57.28	14.74	1.50	1.34		11.90				
	OCU-DP COCI (data) - DS1 to DS0 Channel System combination - per month (2.4-64kbs)			UNCDX	1D1DD	2.10	6.71	4.84				11.90				
	Additional 4-Wire 64Kbps Digital Grade Loopin same DS1 Interoffice Transport Combination - Zone 1		1	UNCDX	UDL64	26.39	127.59	60.54	48.00	6.31		11.90				
	Additional 4-Wire 64Kbps Digital Grade Loopin same DS1 Interoffice Transport Combination - Zone 2		2	UNCDX	UDL64	35.62	127.59	60.54	48.00	6.31		11.90				

CATEGORY	RATE ELEMENTS	Interim	Zone	BCS	USOC	RATES($) Rec	Nonrecurring First	Nonrecurring Add'l	Nonrecurring Disconnect First	Nonrecurring Disconnect Add'l	Svc Order Submitted Elec per LSR	Svc Order Submitted Manually per LSR	Incremental Charge - Manual Svc Order vs. Electronic-1st	Incremental Charge - Manual Svc Order vs. Electronic-Add'l	Incremental Charge - Manual Svc Order vs. Electronic-Disc 1st	Incremental Charge - Manual Svc Order vs. Electronic-Disc Add'l
											OSS Rates($)					
											SOMEC	SOMAN	SOMAN	SOMAN	SOMAN	SOMAN
	Additional 4-Wire 64Kbps Digital Grade Loopin same DS1 Interoffice Transport Combination - Zone 3		3	UNCDX	UDL64	68.82	127.59	60.54	48.00	6.31		11.90				
	OCU-DP COCI (data) - DS1 to DS0 Channel System combination - per month (2.4-64kbs)			UNCDX	1D1DD	2.10	6.71	4.84				11.90				
	Nonrecurring Currently Combined Network Elements Switch -As-Is Charge			UNC1X	UNCCC		8.98	8.98	8.98	8.98		11.90				
4-WIRE DS1 DIGITAL EXTENDED LOOP WITH DEDICATED DS1 INTEROFFICE TRANSPORT (EEL)																
	4-Wire DS1 Digital Loop in Combination with DS1 Interoffice Transport - Zone 1		1	UNC1X	USLXX	73.44	217.75	121.62	51.44	14.45		11.90				
	4-Wire DS1 Digital Loop in Combination with DS1 Interoffice Transport - Zone 2		2	UNC1X	USLXX	99.13	217.75	121.62	51.44	14.45		11.90				
	4-Wire DS1 Digital Loop in Combination with DS1 Interoffice Transport - Zone 3		3	UNC1X	USLXX	191.51	217.75	121.62	51.44	14.45		11.90				
	Interoffice Transport - Dedicated - DS1 combination - Per Mile Per Month			UNC1X	1L5XX	0.1856										
	Interoffice Transport - Dedicated - DS1 combination - Facility Termination Per Month			UNC1X	U1TF1	88.44	174.46	122.46	45.61	17.95		11.90				
	Nonrecurring Currently Combined Network Elements Switch -As-Is Charge			UNC1X	UNCCC		8.98	8.98	8.98	8.98		11.90				
4-WIRE DS1 DIGITAL EXTENDED LOOP WITH DEDICATED DS3 INTEROFFICE TRANSPORT (EEL)																
	First DS1Loop in DS3 Interoffice Transport Combination - Zone 1		1	UNC1X	USLXX	73.44	217.75	121.62	51.44	14.45		11.90				
	First DS1Loop in DS3 Interoffice Transport Combination - Zone 2		2	UNC1X	USLXX	99.13	217.75	121.62	51.44	14.45		11.90				
	First DS1Loop in DS3 Interoffice Transport Combination - Zone 3		3	UNC1X	USLXX	191.51	217.75	121.62	51.44	14.45		11.90				
	Interoffice Transport - Dedicated - DS3 combination - Per Mile Per Month			UNC3X	1L5XX	3.87										
	Interoffice Transport - Dedicated - DS3 - Facility Termination per month			UNC3X	U1TF3	1,071.00	320.00	138.20	38.60	18.81		11.90				
	DS3 to DS1 Channel System combination per month			UNC3X	MQ3	211.19	115.50	56.54	12.16	4.26		11.90				
	DS3 Interface Unit (DS1 COCI) combination per month			UNC1X	UC1D1	13.76	6.71	4.84				11.90				
	Additional DS1Loop in DS3 Interoffice Transport Combination - Zone 1		1	UNC1X	USLXX	73.44	217.75	121.62	51.44	14.45		11.90				
	Additional DS1Loop in DS3 Interoffice Transport Combination - Zone 2		2	UNC1X	USLXX	99.13	217.75	121.62	51.44	14.45		11.90				
	Additional DS1Loop in DS3 Interoffice Transport Combination - Zone 3		3	UNC1X	USLXX	191.51	217.75	121.62	51.44	14.45		11.90				
	DS3 Interface Unit (DS1 COCI) combination per month			UNC1X	UC1D1	13.76	6.71	4.84				11.90				
	Nonrecurring Currently Combined Network Elements Switch -As-Is Charge			UNC3X	UNCCC		8.98	8.98	8.98	8.98		11.90				
2-WIRE VOICE GRADE EXTENDED LOOP/ 2 WIRE VOICE GRADE INTEROFFICE TRANSPORT (EEL)																
	2-WireVG Loop used with 2-wire VG Interoffice Transport Combination - Zone 1		1	UNCVX	UEAL2	14.50	127.59	60.54	48.00	6.31		11.90				
	2-WireVG Loop used with 2-wire VG Interoffice Transport Combination - Zone 2		2	UNCVX	UEAL2	19.57	127.59	60.54	48.00	6.31		11.90				
	2-WireVG Loop used with 2-wire VG Interoffice Transport Combination - Zone 3		3	UNCVX	UEAL2	37.82	127.59	60.54	48.00	6.31		11.90				
	Interoffice Transport - Dedicated - 2-wire VG combination - Per Mile Per Month			UNCVX	1L5XX	0.0091										
	Interoffice Transport - Dedicated - 2- Wire Voice Grade combination - Facility Termination per month			UNCVX	U1TV2	25.32	94.70	52.59	45.28	18.03		11.90				
	Nonrecurring Currently Combined Network Elements Switch -As-Is Charge			UNCVX	UNCCC		8.98	8.98	8.98	8.98		11.90				
4-WIRE VOICE GRADE EXTENDED LOOP/ 4 WIRE VOICE GRADE INTEROFFICE TRANSPORT (EEL)																
	4-WireVG Loop used with 4-wire VG Interoffice Transport Combination - Zone 1		1	UNCVX	UEAL4	23.02	127.59	60.54	48.00	6.31		11.90				
	4-WireVG Loop used with 4-wire VG Interoffice Transport Combination - Zone 2		2	UNCVX	UEAL4	31.07	127.59	60.54	48.00	6.31		11.90				

UNBUNDLED NETWORK ELEMENTS - Florida														Attachment: 2		Exhibit: B	
CATEGORY		RATE ELEMENTS	Interim	Zone	BCS	USOC	RATES($)					Svc Order Submitted Elec per LSR	Svc Order Submitted Manually per LSR	Incremental Charge - Manual Svc Order vs. Electronic-1st	Incremental Charge - Manual Svc Order vs. Electronic-Add'l	Incremental Charge - Manual Svc Order vs. Electronic-Disc 1st	Incremental Charge - Manual Svc Order vs. Electronic-Disc Add'l
							Rec	Nonrecurring		Nonrecurring Disconnect		OSS Rates($)					
								First	Add'l	First	Add'l	SOMEC	SOMAN	SOMAN	SOMAN	SOMAN	SOMAN
		4-WireVG Loop used with 4-wire VG Interoffice Transport Combination - Zone 3		3	UNCVX	UEAL4	60.02	127.59	60.54	48.00	6.31		11.90				
		Interoffice Transport - Dedicated - 4-wire VG combination - Per Mile Per Month			UNCVX	1L5XX	0.0091										
		Interoffice Transport - Dedicated - 4- Wire Voice Grade combination - Facility Termination per month			UNCVX	U1TV4	22.58	94.70	52.59	45.28	18.03		11.90				
		Nonrecurring Currently Combined Network Elements Switch -As-Is Charge			UNCVX	UNCCC		8.98	8.98	8.98	8.98		11.90				
	DS3 DIGITAL EXTENDED LOOP WITH DEDICATED DS3 INTEROFFICE TRANSPORT (EEL)																
		High Capacity Unbundled Local Loop - DS3 combination - Per Mile per month			UNC3X	1L5ND	10.92										
		High Capacity Unbundled Local Loop - DS3 combination - Facility Termination per month			UNC3X	UE3PX	386.88	226.42	154.73	67.10	26.27		11.90				
		Interoffice Transport - Dedicated - DS3 - Per Mile per month			UNC3X	1L5XX	3.87										
		Interoffice Transport - Dedicated - DS3 combination - Facility Termination per per month			UNC3X	U1TF3	1,071.00	320.00	138.20	38.60	18.81		11.90				
		Nonrecurring Currently Combined Network Elements Switch -As-Is Charge			UNC3X	UNCCC		8.98	8.98	8.98	8.98		11.90				
	STS1 DIGITAL EXTENDED LOOP WITH DEDICATED STS1 INTEROFFICE TRANSPORT (EEL)																
		High Capacity Unbundled Local Loop - STS1 combination - Per Mile per month			UNCSX	1L5ND	10.92										
		High Capacity Unbundled Local Loop - STS1 combination - Facility Termination per month			UNCSX	UDLS1	426.60	226.42	154.73	67.10	26.27		11.90				
		Interoffice Transport - Dedicated - STS1 combination - Per Mile per month			UNCSX	1L5XX	3.87										
		Interoffice Transport - Dedicated - STS1 combination - Facility Termination per month			UNCSX	U1TFS	1,056.00	320.00	138.20	38.60	18.81		11.90				
		Nonrecurring Currently Combined Network Elements Switch -As-Is Charge			UNCSX	UNCCC		8.98	8.98	8.98	8.98		11.90				
	2-WIRE ISDN EXTENDED LOOP WITH DS1 INTEROFFICE TRANSPORT (EEL)																
		First 2-Wire ISDN Loop in a DS1 Interoffice Combination Transport - Zone 1		1	UNCNX	U1L2X	21.76	127.59	60.54	48.00	6.31		11.90				
		First 2-Wire ISDN Loop in a DS1 Interoffice Combination Transport - Zone 2		2	UNCNX	U1L2X	29.38	127.59	60.54	48.00	6.31		11.90				
		First 2-Wire ISDN Loop in a DS1 Interoffice Combination Transport - Zone 3		3	UNCNX	U1L2X	56.76	127.59	60.54	48.00	6.31		11.90				
		Interoffice Transport - Dedicated - DS1 combination - Per Mile			UNC1X	1L5XX	0.1856										
		Interoffice Transport - Dedicated - DS1 combintion - Facility Termination per month			UNC1X	U1TF1	88.44	174.46	122.46	45.61	17.95		11.90				
		Channelization - Channel System DS1 to DS0 combination - per month			UNC1X	MQ1	146.77	57.28	14.74	1.50	1.34		11.90				
		2-wire ISDN COCI (BRITE) - DS1 to DS0 Channel System combination - per month			UNCNX	UC1CA	3.66	6.71	4.84				11.90				
		Additional 2-wire ISDN Loop in same DS1Interoffice Transport Combination - Zone 1		1	UNCNX	U1L2X	21.76	127.59	60.54	48.00	6.31		11.90				
		Additional 2-wire ISDN Loop in same DS1Interoffice Transport Combination - Zone 2		2	UNCNX	U1L2X	29.38	127.59	60.54	48.00	6.31		11.90				
		Additional 2-wire ISDN Loop in same DS1Interoffice Transport Combination - Zone 3		3	UNCNX	U1L2X	56.76	127.59	60.54	48.00	6.31		11.90				
		2-wire ISDN COCI (BRITE) - DS1 to DS0 Channel System combintaion- per month			UNCNX	UC1CA	3.66	6.71	4.84				11.90				
		Nonrecurring Currently Combined Network Elements Switch -As-Is Charge			UNC1X	UNCCC		8.98	8.98	8.98	8.98		11.90				
	4-WIRE DS1 DIGITAL EXTENDED LOOP WITH DEDICATED STS-1 INTEROFFICE TRANSPORT (EEL)																
		First DS1 Loop in STS1 Interoffice Transport Combination - Zone 1		1	UNC1X	USLXX	73.44	217.75	121.62	51.44	14.45		11.90				
		First DS1 Loop in STS1 Interoffice Transport Combination - Zone 2		2	UNC1X	USLXX	99.13	217.75	121.62	51.44	14.45		11.90				

CATEGORY	RATE ELEMENTS	Interim	Zone	BCS	USOC	RATES($) Rec	Nonrecurring First	Nonrecurring Add'l	Nonrecurring Disconnect First	Nonrecurring Disconnect Add'l	Svc Order Submitted Elec per LSR	Svc Order Submitted Manually per LSR	Incremental Charge - Manual Svc Order vs. Electronic-1st	Incremental Charge - Manual Svc Order vs. Electronic-Add'l	Incremental Charge - Manual Svc Order vs. Electronic-Disc 1st	Incremental Charge - Manual Svc Order vs. Electronic-Disc Add'l
											OSS Rates($)					
											SOMEC	SOMAN	SOMAN	SOMAN	SOMAN	SOMAN
	First DS1 Loop in STS1 Interoffice Transport Combination - Zone 3		3	UNC1X	USLXX	191.51	217.75	121.62	51.44	14.45		11.90				
	Interoffice Transport - Dedicated - STS1 combination - Per Mile Per Month			UNCSX	1L5XX	3.87										
	Interoffice Transport - Dedicated - STS1 combination - Facility Termination			UNCSX	U1TFS	1,056.00	320.00	138.20	38.60	18.81		11.90				
	STS1 to DS1 Channel System conbination per month			UNCSX	MQ3	211.19										
	DS3 Interface Unit (DS1 COCI) combination per month			UNC1X	UC1D1	13.76	6.71	4.84				11.90				
	Additional DS1Loop in STS1 Interoffice Transport Combination - Zone 1		1	UNC1X	USLXX	73.44	217.75	121.62	51.44	14.45		11.90				
	Additional DS1Loop in STS1 Interoffice Transport Combination - Zone 2		2	UNC1X	USLXX	99.13	217.75	121.62	51.44	14.45		11.90				
	Additional DS1Loop in STS1 Interoffice Transport Combination - Zone 3		3	UNC1X	USLXX	191.51	217.75	121.62	51.44	14.45		11.90				
	DS3 Interface Unit (DS1 COCI) combination per month			UNC1X	UC1D1	13.76	6.71	4.84				11.90				
	Nonrecurring Currently Combined Network Elements Switch -As-Is Charge			UNCSX	UNCCC		8.98	8.98	8.98	8.98		11.90				
4-WIRE 56 KBPS DIGITAL EXTENDED LOOP WITH 56 KBPS INTEROFFICE TRANSPORT (EEL)																
	4-wire 56 kbps Loop/4-wire 56 kbps Interoffice Transport Combination - Zone 1		1	UNCDX	UDL56	26.39	127.59	60.54	48.00	6.31		11.90				
	4-wire 56 kbps Loop/4-wire 56 kbps Interoffice Transport Combination - Zone 2		2	UNCDX	UDL56	35.62	127.59	60.54	48.00	6.31		11.90				
	4-wire 56 kbps Loop/4-wire 56 kbps Interoffice Transport Combination - Zone 3		3	UNCDX	UDL56	68.82	127.59	60.54	48.00	6.31		11.90				
	Interoffice Transport - Dedicated - 4-wire 56 kbps combination - Per Mile			UNCDX	1L5XX	0.0091										
	Interoffice Transport - Dedicated - 4-wire 56 kbps combination - Facility Termination			UNCDX	U1TD5	18.44	94.70	52.59	45.28	18.03		11.90				
	Nonrecurring Currently Combined Network Elements Switch -As-Is Charge			UNCDX	UNCCC		8.98	8.98	8.98	8.98		11.90				
4-WIRE 64 KBPS DIGITAL EXTENDED LOOP WITH 64 KBPS INTEROFFICE TRANSPORT (EEL)																
	4-wire 64 kbps Loop/4-wire 64 kbps Interoffice Transport Combination - Zone 1		1	UNCDX	UDL64	26.39	127.59	60.54	48.00	6.31		11.90				
	4-wire 64 kbps Loop/4-wire 64 kbps Interoffice Transport Combination - Zone 2		2	UNCDX	UDL64	35.62	127.59	60.54	48.00	6.31		11.90				
	4-wire 64 kbps Loop/4-wire 64 kbps Interoffice Transport Combination - Zone 3		3	UNCDX	UDL64	68.82	127.59	60.54	48.00	6.31		11.90				
	Interoffice Transport - Dedicated - 4-wire 64 kbps combination - Per Mile			UNCDX	1L5XX	0.0091										
	Interoffice Transport - Dedicated - 4-wire 64 kbps combination - Facility Termination			UNCDX	U1TD6	18.44	94.70	52.59	45.28	18.03		11.90				
	Nonrecurring Currently Combined Network Elements Switch -As-Is Charge			UNCDX	UNCCC		8.98	8.98	8.98	8.98		11.90				
ADDITIONAL NETWORK ELEMENTS																
	When used as a part of a currently combined facility, the non-recurrng charges do not apply, but a Switch As Is charge does apply.															
	Node (SynchroNet)															
	Nonrecurring Currently Combined Network Elements "Switch As Is" Charge (One applies to each combination)															
	Nonrecurring Currently Combined Network Elements Switch -As-Is Charge - 2 wire/4-Wire VG			UNCVX	UNCCC		8.98	8.98	8.98	8.98		11.90				
	Nonrecurring Currently Combined Network Elements Switch -As-Is Charge - 56/64 kbps			UNCDX	UNCCC		8.98	8.98	8.98	8.98		11.90				
	Nonrecurring Currently Combined Network Elements Switch -As-Is Charge - DS1			UNC1X	UNCCC		8.98	8.98	8.98	8.98		11.90				
	Nonrecurring Currently Combined Network Elements Switch -As-Is Charge - DS3			UNC3X	UNCCC		8.98	8.98	8.98	8.98		11.90				
	Nonrecurring Currently Combined Network Elements Switch -As-Is Charge - STS1			UNCSX	UNCCC		8.98	8.98	8.98	8.98		11.90				
	NOTE: Local Channel - Dedicated Transport - minimum billing period - Below DS3=one month, DS3 and above=four months															
UNBUNDLED LOCAL EXCHANGE SWITCHING(PORTS)																

CATEGORY	RATE ELEMENTS	Interim	Zone	BCS	USOC	RATES($)					Svc Order Submitted Elec per LSR	Svc Order Submitted Manually per LSR	Incremental Charge - Manual Svc Order vs. Electronic-1st	Incremental Charge - Manual Svc Order vs. Electronic-Add'l	Incremental Charge - Manual Svc Order vs. Electronic-Disc 1st	Incremental Charge - Manual Svc Order vs. Electronic-Disc Add'l
						Rec	Nonrecurring		Nonrecurring Disconnect		OSS Rates($)					
							First	Add'l	First	Add'l	SOMEC	SOMAN	SOMAN	SOMAN	SOMAN	SOMAN
	Exchange Ports															
	NOTE: Although the Port Rate includes all available features in GA, KY, LA & TN, the desired features will need to be ordered using retail USOCs															
	2-WIRE VOICE GRADE LINE PORT RATES (RES)															
	Exchange Ports - 2-Wire Analog Line Port- Res.			UEPSR	UEPRL	1.40	3.74	3.63	1.88	1.80		11.90				
	Exchange Ports - 2-Wire Analog Line Port with Caller ID - Res.			UEPSR	UEPRC	1.40	3.74	3.63	1.88	1.80		11.90				
	Exchange Ports - 2-Wire Analog Line Port outgoing only - Res.			UEPSR	UEPRO	1.40	3.74	3.63	1.88	1.80		11.90				
	Exchange Ports - 2-Wire VG unbundled Florida area calling with Caller ID - Res.			UEPSR	UEPAF	1.40	3.74	3.63	1.88	1.80		11.90				
	Exchange Ports - 2-Wire VG unbundled res, low usage line port with Caller ID (LUM)			UEPSR	UEPAP	1.40	3.74	3.63	1.88	1.80		11.90				
	Subsequent Activity			UEPSR	USASC	0.00	0.00	0.00				11.90				
	FEATURES															
	All Available Vertical Features			UEPSR	UEPVF	2.26	0.00	0.00				11.90				
	2-WIRE VOICE GRADE LINE PORT RATES (BUS)															
	Exchange Ports - 2-Wire Analog Line Port without Caller ID - Bus			UEPSB	UEPBL	1.40	3.74	3.63	1.88	1.80		11.90				
	Exchange Ports - 2-Wire VG unbundled Line Port with unbundled port with Caller+E484 ID - Bus.			UEPSB	UEPBC	1.40	3.74	3.63	1.88	1.80		11.90				
	Exchange Ports - 2-Wire Analog Line Port outgoing only - Bus.			UEPSB	UEPBO	1.40	3.74	3.63	1.88	1.80		11.90				
	Exhange Ports - 2-Wire VG unbundled incoming only port with Caller ID - Bus			UEPSB	UEPB1	1.40	3.74	3.63	1.88	1.80		11.90				
	Subsequent Activity			UEPSB	USASC	0.00	0.00	0.00				11.90				
	FEATURES															
	All Available Vertical Features			UEPSB	UEPVF	2.26	0.00	0.00				11.90				
	EXCHANGE PORT RATES (DID & PBX)															
	2-Wire VG Unbundled 2-Way PBX Trunk - Res			UEPSE	UEPRD	1.40	39.06	18.18	12.35	0.7187		11.90				
	2-Wire VG Line Side Unbundled 2-Way PBX Trunk - Bus			UEPSP	UEPPC	1.40	39.06	18.18	12.35	0.7187		11.90				
	2-Wire VG Line Side Unbundled Outward PBX Trunk - Bus			UEPSP	UEPPO	1.40	39.06	18.18	12.35	0.7187		11.90				
	2-Wire VG Line Side Unbundled Incoming PBX Trunk - Bus			UEPSP	UEPP1	1.40	39.06	18.18	12.35	0.7187		11.90				
	2-Wire Analog Long Distance Terminal PBX Trunk - Bus			UEPSP	UEPLD	1.40	39.06	18.18	12.35	0.7187		11.90				
	2-Wire Voice Unbundled PBX LD Terminal Ports			UEPSP	UEPLD	1.40	39.06	18.18	12.35	0.7187		11.90				
	2-Wire Vice Unbundled 2-Way PBX Usage Port			UEPSP	UEPXA	1.40	39.06	18.18	12.35	0.7187		11.90				
	2-Wire Voice Unbundled PBX Toll Terminal Hotel Ports			UEPSP	UEPXB	1.40	39.06	18.18	12.35	0.7187		11.90				
	2-Wire Voice Unbundled PBX LD DDD Terminals Port			UEPSP	UEPXC	1.40	39.06	18.18	12.35	0.7187		11.90				
	2-Wire Voice Unbundled PBX LD Terminal Switchboard Port			UEPSP	UEPXD	1.40	39.06	18.18	12.35	0.7187		11.90				
	2-Wire Voice Unbundled PBX LD Terminal Switchboard IDD Capable Port			UEPSP	UEPXE	1.40	39.06	18.18	12.35	0.7187		11.90				
	2-Wire Voice Unbundled 2-Way PBX Hotel/Hospital Economy Administrative Calling Port			UEPSP	UEPXL	1.40	39.06	18.18	12.35	0.7187		11.90				
	2-Wire Voice Unbundled 2-Way PBX Hotel/Hospital Economy Room Calling Port			UEPSP	UEPXM	1.40	39.06	18.18	12.35	0.7187		11.90				
	2-Wire Voice Unbundled 1-Way Outgoing PBX Hotel/Hospital Discount Room Calling Port			UEPSP	UEPXO	1.40	39.06	18.18	12.35	0.7187		11.90				
	2-Wire Voice Unbundled 1-Way Outgoing PBX Measured Port			UEPSP	UEPXS	1.40	39.06	18.18	12.35	0.7187		11.90				
	Subsequent Activity			UEPSP	USASC	0.00	0.00	0.00				11.90				
	FEATURES															
	All Available Vertical Features			UEPSP UEPSE	UEPVF	2.26	0.00	0.00				11.90				
	EXCHANGE PORT RATES (COIN)															
	Exchange Ports - Coin Port					1.40	3.74	3.63	1.88	1.80		11.90				
	NOTE: Transmission/usage charges associated with POTS circuit switched usage will also apply to circuit switched voice and/or circuit switched data transmission by B-Channels associated with 2-wire ISDN ports.															
	NOTE: Access to B Channel or D Channel Packet capabilities will be available only through BFR/New Business Request Process. Rates for the packet capabilities will be determined via the Bona Fide Request/New Business Request Process.															
UNBUNDLED LOCAL EXCHANGE SWITCHING(PORTS)																
	EXCHANGE PORT RATES (DID & PBX)															
	Exchange Ports - 2-Wire DID Port			UEPEX	UEPP2	8.73	78.41	15.82	41.94	4.26		11.90			1.83	
	Exchange Ports - DDITS Port - 4-Wire DS1 Port with DID capability			UEPDD	UEPDD	54.95	151.11	77.75	48.81	3.10		11.90			1.83	

CATEGORY	RATE ELEMENTS	Interim	Zone	BCS	USOC	RATES($)					Svc Order Submitted Elec per LSR	Svc Order Submitted Manually per LSR	Incremental Charge - Manual Svc Order vs. Electronic-1st	Incremental Charge - Manual Svc Order vs. Electronic-Add'l	Incremental Charge - Manual Svc Order vs. Electronic-Disc 1st	Incremental Charge - Manual Svc Order vs. Electronic-Disc Add'l
						Rec	Nonrecurring		Nonrecurring Disconnect		OSS Rates($)					
							First	Add'l	First	Add'l	SOMEC	SOMAN	SOMAN	SOMAN	SOMAN	SOMAN
	Exchange Ports - 2-Wire ISDN Port (See Notes below.)			UEPTX UEPSX	U1PMA	8.83	46.83	50.68	27.64	11.93		11.90			1.83	
	All Features Offered			UEPTX UEPSX	UEPVF	2.26	0.00	0.00				11.90			1.83	
	NOTE: Transmission/usage charges associated with POTS circuit switched usage will also apply to circuit switched voice and/or circuit switched data transmission by B-Channels associated with 2-wire ISDN ports.															
	NOTE: Access to B Channel or D Channel Packet capabilities will be available only through BFR/New Business Request Process. Rates for the packet capabilities will be determined via the Bona Fide Request/New Business Request Process.															
	Exchange Ports - 2-Wire ISDN Port -- Channel Profiles			UEPTX UEPSX	U1UMA	0.00	0.00	0.00								
	Exchange Ports - 4-Wire ISDN DS1 Port			UEPEX	UEPEX	82.74	174.61	95.17	49.80	18.23		11.90			1.83	
UNBUNDLED LOCAL SWITCHING, PORT USAGE																
End Office Switching (Port Usage)																
	End Office Switching Function, Per MOU					0.0007662										
	End Office Trunk Port - Shared, Per MOU					0.000164										
Tandem Switching (Port Usage) (Local or Access Tandem)																
	Tandem Switching Function Per MOU					0.0001319										
	Tandem Trunk Port - Shared, Per MOU					0.000235										
Common Transport																
	Common Transport - Per Mile, Per MOU					0.0000035										
	Common Transport - Facilities Termination Per MOU					0.0004372										
UNBUNDLED PORT/LOOP COMBINATIONS - COST BASED RATES																
Cost Based Rates are applied where BellSouth is required by FCC and/or State Commission rule to provide Unbundled Local Switching or Switch Ports.																
Features shall apply to the Unbundled Port/Loop Combination - Cost Based Rate section in the same manner as they are applied to the Stand-Alone Unbundled Port section of this Rate Exhibit.																
End Office and Tandem Switching Usage and Common Transport Usage rates in the Port section of this rate exhibit shall apply to all combinations of loop/port network elements except for UNE Coin Port/Loop Combinations.																
For Georgia, Kentucky, Louisiana, Mississippi, South Carolina and Tennessee, the recurring UNE Port and Loop charges listed apply to Currently Combined and Not Currently Combined Combos. The first and additional Port nonrecurring charges apply to Not Currently Combined Combos for all states. In GA, KY, LA, MS, SC and TN these nonrecurring charges are commission ordered cost based rates and in AL, FL and NC these nonrecurring charges are Market Rates and are also listed in the Market Rate section. For Currently Combined Combos in all other states, the nonrecurring charges shall be those identified in the Nonrecurring - Currently Combined sections.																
2-WIRE VOICE GRADE LOOP WITH 2-WIRE LINE PORT (RES)																
UNE Port/Loop Combination Rates																
	2-Wire VG Loop/Port Combo - Zone 1		1			14.11										
	2-Wire VG Loop/Port Combo - Zone 2		2			18.23										
	2-Wire VG Loop/Port Combo - Zone 3		3			33.04										
UNE Loop Rates																
	2-Wire Voice Grade Loop (SL1) - Zone 1		1	UEPRX	UEPLX	12.94										
	2-Wire Voice Grade Loop (SL1) - Zone 2		2	UEPRX	UEPLX	17.06										
	2-Wire Voice Grade Loop (SL1) - Zone 3		3	UEPRX	UEPLX	31.87										
2-Wire Voice Grade Line Port Rates (Res)																
	2-Wire voice unbundled port - residence			UEPRX	UEPRL	1.17	90.00	90.00				11.90				
	2-Wire voice unbundled port with Caller ID - res			UEPRX	UEPRC	1.17	90.00	90.00				11.90				
	2-Wire voice unbundled port outgoing only - res			UEPRX	UEPRO	1.17	90.00	90.00				11.90				
	2-Wire voice unbundled Florida Area Calling with Caller ID - res			UEPRX	UEPAF	1.17	90.00	90.00				11.90				
	2-Wire voice unbundles res, low usage line port with Caller ID (LUM)			UEPRX	UEPAP	1.17	90.00	90.00				11.90				
FEATURES																
	All Features Offered			UEPRX	UEPVF	2.26	0.00	0.00				11.90				
LOCAL NUMBER PORTABILITY																
	Local Number Portability (1 per port)			UEPRX	LNPCX	0.35										
NONRECURRING CHARGES (NRCs) - CURRENTLY COMBINED																
	2-Wire Voice Grade Loop / Line Port Combination - Conversion - Switch-as-is			UEPRX	USAC2		0.102	0.102				11.90				
	2-Wire Voice Grade Loop / Line Port Combination - Conversion - Switch with change			UEPRX	USACC		0.102	0.102				11.90				
ADDITIONAL NRCs																
	2-Wire Voice Grade Loop/Line Port Combination - Subsequent Activity			UEPRX	USAS2	0.00	0.00	0.00				11.90				
2-WIRE VOICE GRADE LOOP WITH 2-WIRE LINE PORT (BUS)																
UNE Port/Loop Combination Rates																
	2-Wire VG Loop/Port Combo - Zone 1		1			14.11										
	2-Wire VG Loop/Port Combo - Zone 2		2			18.23										
	2-Wire VG Loop/Port Combo - Zone 3		3			33.04										
UNE Loop Rates																
	2-Wire Voice Grade Loop (SL1) - Zone 1		1	UEPBX	UEPLX	12.94										

CATEGORY	RATE ELEMENTS	Interim	Zone	BCS	USOC	RATES($) Rec	Nonrecurring First	Nonrecurring Add'l	Nonrecurring Disconnect First	Nonrecurring Disconnect Add'l	Svc Order Submitted Elec per LSR	Svc Order Submitted Manually per LSR	Incremental Charge - Manual Svc Order vs. Electronic-1st	Incremental Charge - Manual Svc Order vs. Electronic-Add'l	Incremental Charge - Manual Svc Order vs. Electronic-Disc 1st	Incremental Charge - Manual Svc Order vs. Electronic-Disc Add'l
											OSS Rates($)					
											SOMEC	SOMAN	SOMAN	SOMAN	SOMAN	SOMAN
	2-Wire Voice Grade Loop (SL1) - Zone 2		2	UEPBX	UEPLX	17.06										
	2-Wire Voice Grade Loop (SL1) - Zone 3		3	UEPBX	UEPLX	31.87										
2-Wire Voice Grade Line Port (Bus)																
	2-Wire voice unbundled port without Caller ID - bus			UEPBX	UEPBL	1.17	90.00	90.00				11.90				
	2-Wire voice unbundled port with Caller + E484 ID - bus			UEPBX	UEPBC	1.17	90.00	90.00				11.90				
	2-Wire voice unbundled port outgoing only - bus			UEPBX	UEPBO	1.17	90.00	90.00				11.90				
	2-Wire voice unbundled incoming only port with Caller ID - Bus			UEPBX	UPEB1	1.17	90.00	90.00				11.90				
LOCAL NUMBER PORTABILITY																
	Local Number Portability (1 per port)			UEPBX	LNPCX	0.35										
FEATURES																
	All Features Offered			UEPBX	UEPVF	2.26	0.00	0.00				11.90				
NONRECURRING CHARGES (NRCs) - CURRENTLY COMBINED																
	2-Wire Voice Grade Loop / Line Port Combination - Conversion - Switch-as-is			UEPBX	USAC2		0.102	0.102				11.90				
	2-Wire Voice Grade Loop / Line Port Combination - Conversion - Switch with change			UEPBX	USACC		0.102	0.102				11.90				
ADDITIONAL NRCs																
	2-Wire Voice Grade Loop/Line Port Combination - Subsequent Activity			UEPBX	USAS2		0.00	0.00				11.90				
2-WIRE VOICE GRADE LOOP WITH 2-WIRE LINE PORT (RES - PBX)																
UNE Port/Loop Combination Rates																
	2-Wire VG Loop/Port Combo - Zone 1		1			14.11										
	2-Wire VG Loop/Port Combo - Zone 2		2			18.23										
	2-Wire VG Loop/Port Combo - Zone 3		3			33.04										
UNE Loop Rates																
	2-Wire Voice Grade Loop (SL 1) - Zone 1		1	UEPRG	UEPLX	12.94										
	2-Wire Voice Grade Loop (SL 1) - Zone 2		2	UEPRG	UEPLX	17.06										
	2-Wire Voice Grade Loop (SL 1) - Zone 3		3	UEPRG	UEPLX	31.87										
2-Wire Voice Grade Line Port Rates (RES - PBX)																
	2-Wire VG Unbundled Combination 2-Way PBX Trunk Port - Res			UEPRG	UEPRD	1.17	90.00	90.00				11.90				
LOCAL NUMBER PORTABILITY																
	Local Number Portability (1 per port)			UEPRG	LNPCP	3.15	0.00	0.00				11.90				
FEATURES																
	All Features Offered			UEPRG	UEPVF	2.26	0.00	0.00				11.90				
NONRECURRING CHARGES (NRCs) - CURRENTLY COMBINED																
	2-Wire Voice Grade Loop/ Line Port Combination (PBX) - Conversion - Switch-As-Is			UEPRG	USAC2		8.45	1.91				11.90				
	2-Wire Voice Grade Loop/ Line Port Combination (PBX) - Conversion - Switch with Change			UEPRG	USACC		8.45	1.91				11.90				
ADDITIONAL NRCs																
	2-Wire Voice Grade Loop/ Line Port Combination (PBX) - Subsequent Activity			UEPRG	USAS2	0.00	0.00	0.00				11.90				
	PBX Subsequent Activity - Change/Rearrange Multiline Hunt Group						7.09	7.09				11.90				
2-WIRE VOICE GRADE LOOP WITH 2-WIRE LINE PORT (BUS - PBX)																
UNE Port/Loop Combination Rates																
	2-Wire VG Loop/Port Combo - Zone 1		1			14.11										
	2-Wire VG Loop/Port Combo - Zone 2		2			18.23										
	2-Wire VG Loop/Port Combo - Zone 3		3			33.04										
UNE Loop Rates																
	2-Wire Voice Grade Loop (SL 1) - Zone 1		1	UEPPX	UEPLX	12.94										
	2-Wire Voice Grade Loop (SL 1) - Zone 2		2	UEPPX	UEPLX	17.06										
	2-Wire Voice Grade Loop (SL 1) - Zone 3		3	UEPPX	UEPLX	31.87										
2-Wire Voice Grade Line Port Rates (BUS - PBX)																
	Line Side Unbundled Combination 2-Way PBX Trunk Port - Bus			UEPPX	UEPPC	1.17	90.00	90.00				11.90				
	Line Side Unbundled Outward PBX Trunk Port - Bus			UEPPX	UEPPO	1.17	90.00	90.00				11.90				
	Line Side Unbundled Incoming PBX Trunk Port - Bus			UEPPX	UEPP1	1.17	90.00	90.00				11.90				

UNBUNDLED NETWORK ELEMENTS - Florida													Attachment: 2		Exhibit: B	
CATEGORY	RATE ELEMENTS	Interim	Zone	BCS	USOC	RATES($)					Svc Order Submitted Elec per LSR	Svc Order Submitted Manually per LSR	Incremental Charge - Manual Svc Order vs. Electronic-1st	Incremental Charge - Manual Svc Order vs. Electronic-Add'l	Incremental Charge - Manual Svc Order vs. Electronic-Disc 1st	Incremental Charge - Manual Svc Order vs. Electronic-Disc Add'l
						Rec	Nonrecurring		Nonrecurring Disconnect		OSS Rates($)					
							First	Add'l	First	Add'l	SOMEC	SOMAN	SOMAN	SOMAN	SOMAN	SOMAN
	2-Wire Voice Unbundled PBX LD Terminal Ports			UEPPX	UEPLD	1.17	90.00	90.00				11.90				
	2-Wire Voice Unbundled 2-Way Combination PBX Usage Port			UEPPX	UEPXA	1.17	90.00	90.00				11.90				
	2-Wire Voice Unbundled PBX Toll Terminal Hotel Ports			UEPPX	UEPXB	1.17	90.00	90.00				11.90				
	2-Wire Voice Unbundled PBX LD DDD Terminals Port			UEPPX	UEPXC	1.17	90.00	90.00				11.90				
	2-Wire Voice Unbundled PBX LD Terminal Switchboard Port			UEPPX	UEPXD	1.17	90.00	90.00				11.90				
	2-Wire Voice Unbundled PBX LD Terminal Switchboard IDD Capable Port			UEPPX	UEPXE	1.17	90.00	90.00				11.90				
	2-Wire Voice Unbundled 2-Way PBX Hotel/Hospital Economy Administrative Calling Port			UEPPX	UEPXL	1.17	90.00	90.00				11.90				
	2-Wire Voice Unbundled 2-Way PBX Hotel/Hospital Economy Room Calling Port			UEPPX	UEPXM	1.17	90.00	90.00				11.90				
	2-Wire Voice Unbundled 1-Way Outgoing PBX Hotel/Hospital Discount Room Calling Port			UEPPX	UEPXO	1.17	90.00	90.00				11.90				
	2-Wire Voice Unbundled 1-Way Outgoing PBX Measured Port			UEPPX	UEPXS	1.17	90.00	90.00				11.90				
LOCAL NUMBER PORTABILITY																
	Local Number Portability (1 per port)			UEPPX	LNPCP	3.15	0.00	0.00				11.90				
FEATURES																
	All Features Offered			UEPPX	UEPVF	2.26	0.00	0.00				11.90				
NONRECURRING CHARGES (NRCs) - CURRENTLY COMBINED																
	2-Wire Voice Grade Loop/ Line Port Combination (PBX) - Conversion - Switch-As-Is			UEPPX	USAC2		8.45	1.91				11.90				
	2-Wire Voice Grade Loop/ Line Port Combination (PBX) - Conversion - Switch with Change			UEPPX	USACC		8.45	1.91				11.90				
ADDITIONAL NRCs																
	2-Wire Voice Grade Loop/ Line Port Combination (PBX) - Subsequent Activity			UEPPX	USAS2	0.00	0.00	0.00				11.90				
	PBX Subsequent Activity - Change/Rearrange Multiline Hunt Group						7.86	7.86				11.90				
2-WIRE VOICE GRADE LOOP WITH 2-WIRE ANALOG LINE COIN PORT																
UNE Port/Loop Combination Rates																
	2-Wire VG Coin Port/Loop Combo – Zone 1		1			14.11										
	2-Wire VG Coin Port/Loop Combo – Zone 2		2			18.23										
	2-Wire VG Coin Port/Loop Combo – Zone 3		3			33.04										
UNE Loop Rates																
	2-Wire Voice Grade Loop (SL1) - Zone 1		1	UEPCO	UEPLX	12.94										
	2-Wire Voice Grade Loop (SL1) - Zone 2		2	UEPCO	UEPLX	17.06										
	2-Wire Voice Grade Loop (SL1) - Zone 3		3	UEPCO	UEPLX	31.87										
2-Wire Voice Grade Line Ports (COIN)																
	2-Wire Coin 2-Way with Operator Screening and Blocking: 011, 900/976, 1+DDD (FL)			UEPCO	UEP2F	1.17	90.00	90.00				11.90				
	2-Wire Coin 2-Way with Operator Screening and 011 Blocking (FL)			UEPCO	UEPFA	1.17	90.00	90.00				11.90				
	2-Wire Coin 2-Way with Operator Screening and Blocking: 900/976, 1+DDD, 011+, and Local (FL)			UEPCO	UEPCG	1.17	90.00	90.00				11.90				
	2-Wire Coin Outward with Operator Screening and 011 Blocking (AL, FL)			UEPCO	UEPRK	1.17	90.00	90.00				11.90				
	2-Wire Coin Outward with Operator Screening and Blocking: 900/976, 1+DDD, 011+ (FL)			UEPCO	UEPOF	1.17	90.00	90.00				11.90				
	2-Wire Coin Outward with Operator Screening and Blocking: 900/976, 1+DDD, 011+, and Local (FL, GA)			UEPCO	UEPCQ	1.17	90.00	90.00				11.90				
	2-Wire 2-Way Smartline with 900/976 (all states except LA)			UEPCO	UEPCK	1.17	90.00	90.00				11.90				
	2-Wire Coin Outward Smartline with 900/976 (all states except LA)			UEPCO	UEPCR	1.17	90.00	90.00				11.90				
ADDITIONAL UNE COIN PORT/LOOP (RC)																
	UNE Coin Port/Loop Combo Usage (Flat Rate)			UEPCO	URECU	1.86	90.00	90.00				11.90				
LOCAL NUMBER PORTABILITY																
	Local Number Portability (1 per port)			UEPCO	LNPCX	0.35										
NONRECURRING CHARGES - CURRENTLY COMBINED																

CATEGORY	RATE ELEMENTS	Interim	Zone	BCS	USOC	RATES($) Rec	Nonrecurring First	Nonrecurring Add'l	Nonrecurring Disconnect First	Nonrecurring Disconnect Add'l	Svc Order Submitted Elec per LSR SOMEC	Svc Order Submitted Manually per LSR SOMAN	OSS Rates($) Incremental Charge - Manual Svc Order vs. Electronic-1st SOMAN	Incremental Charge - Manual Svc Order vs. Electronic-Add'l SOMAN	Incremental Charge - Manual Svc Order vs. Electronic-Disc 1st SOMAN	Incremental Charge - Manual Svc Order vs. Electronic-Disc Add'l SOMAN
	2-Wire Voice Grade Loop / Line Port Combination - Conversion - Switch-as-is			UEPCO	USAC2		0.102	0.102				11.90				
	2-Wire Voice Grade Loop / Line Port Combination - Conversion - Switch with change			UEPCO	USACC		0.102	0.102				11.90				
ADDITIONAL NRCs																
	2-Wire Voice Grade Loop/Line Port Combination - Subsequent Activity			UEPCO	USAS2		0.00	0.00				11.90				
UNBUNDLED REMOTE CALL FORWARDING - RES																
Non-Recurring																
UNBUNDLED REMOTE CALL FORWARDING - Bus																
	Unbundled Remote Call Forwarding, InterState/Intra LATA-Bus			UEPVB	UEPVJ	1.40	3.74	3.63	1.88	1.80		11.90				
Non-Recurring																
2-WIRE VOICE LOOP/ 2WIRE VOICE GRADE IO TRANSPORT/ 2-WIRE LINE PORT (RES)																
	2-Wire voice unbundles res, low usage line port with Caller ID (LUM)			UEPFR	UEPAP	1.62	250.00	250.00				11.90				
2-WIRE VOICE LOOP/ 2WIRE VOICE GRADE IO TRANSPORT/ 2-WIRE LINE PORT (BUS)																
UNBUNDLED PORT/LOOP COMBINATIONS - COST BASED RATES																
2-WIRE VOICE GRADE LOOP- BUS ONLY - WITH 2-WIRE DID TRUNK PORT																
UNE Port/Loop Combination Rates																
	2-Wire VG Loop/2-Wire DID Trunk Port Combo - UNE Zone 1		1			23.21										
	2-Wire VG Loop/2-Wire DID Trunk Port Combo - UNE Zone 2		2			28.28										
	2-Wire VG Loop/2-Wire DID Trunk Port Combo - UNE Zone 3		3			46.53										
UNE Loop Rates																
	2-Wire Analog Voice Grade Loop - (SL2) - UNE Zone 1		1	UEPPX	UECD1	14.50						11.90			1.83	
	2-Wire Analog Voice Grade Loop - (SL2) - UNE Zone 2		2	UEPPX	UECD1	19.57						11.90			1.83	
	2-Wire Analog Voice Grade Loop - (SL2) - UNE Zone 3		3	UEPPX	UECD1	37.82						11.90			1.83	
UNE Port Rate																
	Exchange Ports - 2-Wire DID Port			UEPPX	UEPD1	8.71	850.00	75.00				11.90			1.83	
NONRECURRING CHARGES - CURRENTLY COMBINED																
	2-Wire Voice Grade Loop / 2-Wire DID Trunk Port Combination - Switch-as-is			UEPPX	USAC1		7.85	1.87				11.90				
	2-Wire Voice Grade Loop / 2-Wire DID Trunk Port Conversion with BellSouth Allowable Changes			UEPPX	USA1C		7.85	1.87				11.90				
ADDITIONAL NRCs																
	2-Wire DID Subsequent Activity - Add Trunks, Per Trunk			UEPPX	USAS1		32.26	32.26				11.90				
Telephone Number/Trunk Group Establisment Charges																
	DID Trunk Termination (One Per Port)			UEPPX	NDT	0.00	0.00	0.00				11.90			1.83	
	DID Numbers, Establish Trunk Group and Provide First Group of 20 DID Numbers			UEPPX	NDZ	0.00	0.00	0.00				11.90			1.83	
	Additional DID Numbers for each Group of 20 DID Numbers			UEPPX	ND4	0.00	0.00	0.00				11.90			1.83	
	DID Numbers, Non- consecutive DID Numbers , Per Number			UEPPX	ND5	0.00	0.00	0.00				11.90			1.83	
	Reserve Non-Consecutive DID numbers			UEPPX	ND6	0.00	0.00	0.00				11.90			1.83	
	Reserve DID Numbers			UEPPX	NDV	0.00	0.00	0.00				11.90			1.83	
LOCAL NUMBER PORTABILITY																
	Local Number Portability (1 per port)			UEPPX	LNPCP	3.15	0.00	0.00								
2-WIRE ISDN DIGITAL GRADE LOOP WITH 2-WIRE ISDN DIGITAL LINE SIDE PORT																
UNE Port/Loop Combination Rates																
	2W ISDN Digital Grade Loop/2W ISDN Digital Line Side Port - UNE Zone 1		1	UEPPB UEPPR		32.09										
	2W ISDN Digital Grade Loop/2W ISDN Digital Line Side Port - UNE Zone 2		2	UEPPB UEPPR		38.15										
	2W ISDN Digital Grade Loop/2W ISDN Digital Line Side Port - UNE Zone 3		3	UEPPB UEPPR		59.94										
UNE Loop Rates																
	2-Wire ISDN Digital Grade Loop - UNE Zone 1		1	UEPPB UEPPR	USL2X	24.71						11.90			1.83	
	2-Wire ISDN Digital Grade Loop - UNE Zone 2		2	UEPPB UEPPR	USL2X	30.77						11.90			1.83	
	2-Wire ISDN Digital Grade Loop - UNE Zone 3		3	UEPPB UEPPR	USL2X	52.56						11.90			1.83	
UNE Port Rate																

CATEGORY	RATE ELEMENTS	Interim	Zone	BCS	USOC	RATES($) Rec	Nonrecurring First	Nonrecurring Add'l	Nonrecurring Disconnect First	Nonrecurring Disconnect Add'l	Svc Order Submitted Elec per LSR	Svc Order Submitted Manually per LSR	OSS Rates($) Incremental Charge - Manual Svc Order vs. Electronic-1st	OSS Rates($) Incremental Charge - Manual Svc Order vs. Electronic-Add'l	OSS Rates($) Incremental Charge - Manual Svc Order vs. Electronic-Disc 1st	OSS Rates($) Incremental Charge - Manual Svc Order vs. Electronic-Disc Add'l
											SOMEC	SOMAN	SOMAN	SOMAN	SOMAN	SOMAN
	Exchange Port - 2-Wire ISDN Line Side Port			UEPPB UEPPR	UEPPB	7.38	525.00	400.00				11.09			1.83	
	NONRECURRING CHARGES - CURRENTLY COMBINED															
	2-Wire ISDN Digital Grade Loop / 2-Wire ISDN Line Side Port Combination - Conversion			UEPPB UEPPR	USACB	0.00	25.22	17.00				11.90			1.83	
	ADDITIONAL NRCs															
	LOCAL NUMBER PORTABILITY															
	Local Number Portability (1 per port)			UEPPB UEPPR	LNPCX	0.35	0.00	0.00								
	B-CHANNEL USER PROFILE ACCESS:															
	CVS/CSD (DMS/5ESS)			UEPPB UEPPR	U1UCA	0.00	0.00	0.00								
	CVS (EWSD)			UEPPB UEPPR	U1UCB	0.00	0.00	0.00								
	CSD			UEPPB UEPPR	U1UCC	0.00	0.00	0.00								
	B-CHANNEL AREA PLUS USER PROFILE ACCESS: (AL,KY,LA,MS SC,MS, & TN)															
	USER TERMINAL PROFILE															
	User Terminal Profile (EWSD only)			UEPPB UEPPR	U1UMA	0.00	0.00	0.00								
	VERTICAL FEATURES															
	All Vertical Features - One per Channel B User Profile			UEPPB UEPPR	UEPVF	2.26	0.00	0.00				11.90				
	INTEROFFICE CHANNEL MILEAGE															
	Interoffice Channel mileage each, including first mile and facilities termination			UEPPB UEPPR	M1GNC	18.4491	47.35	31.78	18.31	7.03		11.90			1.83	
	Interoffice Channel mileage each, additional mile			UEPPB UEPPR	M1GNM	0.0091	0.00	0.00				11.90			1.83	
	4-WIRE DS1 DIGITAL LOOP WITH 4-WIRE ISDN DS1 DIGITAL TRUNK PORT															
	UNE Port/Loop Combination Rates															
	4W DS1 Digital Loop/4W ISDN DS1 Digital Trunk Port - UNE Zone 1		1	UEPPP		156.18										
	4W DS1 Digital Loop/4W ISDN DS1 Digital Trunk Port - UNE Zone 2		2	UEPPP		181.87										
	4W DS1 Digital Loop/4W ISDN DS1 Digital Trunk Port - UNE Zone 3		3	UEPPP		274.25										
	UNE Loop Rates															
	4-Wire DS1 Digital Loop - UNE Zone 1		1	UEPPP	USL4P	73.44						11.90			1.83	
	4-Wire DS1 Digital Loop - UNE Zone 2		2	UEPPP	USL4P	99.13						11.90			1.83	
	4-Wire DS1 Digital Loop - UNE Zone 3		3	UEPPP	USL4P	191.51						11.90			1.83	
	UNE Port Rate															
	Exchange Ports - 4-Wire ISDN DS1 Port			UEPPP	UEPPP	82.74	1,150.00	1,150.00				11.90			1.83	
	NONRECURRING CHARGES - CURRENTLY COMBINED															
	4-Wire DS1 Digital Loop / 4-Wire ISDN DS1 Digital Trunk Port Combination - Conversion -Switch-as-is			UEPPP	USACP	0.00	84.17	61.38				11.90			1.83	
	ADDITIONAL NRCs															
	4-Wire DS1 Loop/4-W ISDN Digtl Trk Port - Subsqt Actvy-Inward/two way tel nos within Std Allowance (except NC)			UEPPP	PR7TF		0.5412					11.90			1.83	
	4-Wire DS1 Loop / 4-Wire ISDN DS1 Digital Trunk Port - Outward Tel Numbers (All States except NC)			UEPPP	PR7TO		12.71	12.71				11.90			1.83	
	4-Wire DS1 Loop / 4-Wire ISDN DS1 Digital Trk Port - Subsequent Inward Tel Nos Above Std Allowance			UEPPP	PR7ZT		25.42	25.42				11.90			1.83	
	LOCAL NUMBER PORTABILITY															
	Local Number Portability (1 per port)			UEPPP	LNPCN	1.75										
	INTERFACE (Provsioning Only)															
	Voice/Data			UEPPP	PR71V	0.00	0.00	0.00								
	Digital Data			UEPPP	PR71D	0.00	0.00	0.00								
	Inward Data			UEPPP	PR71E	0.00	0.00	0.00								
	New or Additional "B" Channel															
	New or Additional - Voice/Data B Channel			UEPPP	PR7BV	0.00	15.48					11.90			1.83	
	New or Additional - Digital Data B Channel			UEPPP	PR7BF	0.00	15.48					11.90			1.83	
	New or Additional Inward Data B Channel			UEPPP	PR7BD	0.00	15.48					11.90			1.83	
	CALL TYPES															
	Inward			UEPPP	PR7C1	0.00	0.00	0.00								
	Outward			UEPPP	PR7C0	0.00	0.00	0.00								
	Two-way			UEPPP	PR7CC	0.00	0.00	0.00								
	Interoffice Channel Mileage															

CATEGORY	RATE ELEMENTS	Interim	Zone	BCS	USOC	RATES($) Rec	Nonrecurring First	Nonrecurring Add'l	Nonrecurring Disconnect First	Nonrecurring Disconnect Add'l	Svc Order Submitted Elec per LSR	Svc Order Submitted Manually per LSR	Incremental Charge - Manual Svc Order vs. Electronic- 1st	Incremental Charge - Manual Svc Order vs. Electronic- Add'l	Incremental Charge - Manual Svc Order vs. Electronic- Disc 1st	Incremental Charge - Manual Svc Order vs. Electronic- Disc Add'l
											OSS Rates($)					
											SOMEC	SOMAN	SOMAN	SOMAN	SOMAN	SOMAN
	Fixed Each Including First Mile			UEPPP	1LN1A	88.6256	105.54	98.47	21.47	19.05		11.90			1.93	
	Each Airline-Fractional Additional Mile			UEPPP	1LN1B	0.1856										
4-WIRE DS1 DIGITAL LOOP WITH 4-WIRE DDITS TRUNK PORT																
UNE Port/Loop Combination Rates																
	4W DS1 Digital Loop/4W DDITS Trunk Port - UNE Zone 1		1	UEPDC		128.39						11.90			1.83	
	4W DS1 Digital Loop/4W DDITS Trunk Port - UNE Zone 2		2	UEPDC		154.08						11.90			1.83	
	4W DS1 Digital Loop/4W DDITS Trunk Port - UNE Zone 3		3	UEPDC		246.46						11.90			1.83	
UNE Loop Rates																
	4-Wire DS1 Digital Loop - UNE Zone 1		1	UEPDC	USLDC	73.44						11.90			1.83	
	4-Wire DS1 Digital Loop - UNE Zone 2		2	UEPDC	USLDC	99.13						11.90			1.83	
	4-Wire DS1 Digital Loop - UNE Zone 3		3	UEPDC	USLDC	191.51						11.90			1.83	
UNE Port Rate																
	4-Wire DDITS Digital Trunk Port			UEPDC	UDD1T	54.95						11.90			1.83	
NONRECURRING CHARGES - CURRENTLY COMBINED																
	4-Wire DS1 Digital Loop / 4-Wire DDITS Trunk Port Combination - Switch-as-is			UEPDC	USAC4		95.31	46.71				11.90			1.83	
	4-Wire DS1 Digital Loop / 4-Wire DDITS Trunk Port Combination - Conversion with DS1 Changes			UEPDC	USAWA		95.31	46.71				11.90			1.83	
	4-Wire DS1 Digital Loop / 4-Wire DDITS Trunk Port Combination - Conversion with Change - Trunk			UEPDC	USAWB		95.31	46.71				11.90			1.83	
ADDITIONAL NRCs																
	4-Wire DS1 Loop / 4-Wire DDITS Trunk Port - NRC - Subsequent Channel Activation/Chan - 2-Way Trunk			UEPDC	UDTTA		15.69	15.69				11.90			1.83	
	4-Wire DS1 Loop / 4-Wire DDITS Trunk Port - Subsequent Channel Activation/Chan - 1-Way Outward Trunk			UEPDC	UDTTB		15.69	15.69				11.90			1.83	
	4-Wire DS1 Loop / 4-Wire DDITS Trunk Port - Subsqnt Channel Activation/Chan Inward Trunk w/out DID			UEPDC	UDTTC		15.69	15.69				11.90			1.83	
	4-Wire DS1 Loop / 4-Wire DDITS Trunk Port - Subsqnt Chan Activation Per Chan - Inward Trunk with DID			UEPDC	UDTTD		15.69	15.69				11.90			1.83	
	4-Wire DS1 Loop / 4-Wire DDITS Trunk Port - Subsqnt Chan Activation / Chan - 2-Way DID w User Trans			UEPDC	UDTTE		15.69	15.69				11.90			1.83	
BIPOLAR 8 ZERO SUBSTITUTION																
	B8ZS -Superframe Format			UEPDC	CCOSF		0.00	655.00				11.90			1.83	
	B8ZS - Extended Superframe Format			UEPDC	CCOEF		0.00	655.00				11.90			1.83	
Alternate Mark Inversion																
	AMI -Superframe Format			UEPDC	MCOSF		0.00	0.00								
	AMI - Extended SuperFrame Format			UEPDC	MCOPO		0.00	0.00								
Telephone Number/Trunk Group Establisment Charges																
	Telephone Number for 2-Way Trunk Group			UEPDC	UDTGX	0.00						11.90			1.83	
	Telephone Number for 1-Way Outward Trunk Group			UEPDC	UDTGY	0.00						11.90			1.83	
	Telephone Number for 1-Way Inward Trunk Group Without DID			UEPDC	UDTGZ	0.00						11.90			1.83	
	DID Numbers, Establish Trunk Group and Provide First Group of 20 DID Numbers			UEPDC	NDZ	0.00	0.00	0.00				11.90			1.83	
	DID Numbers for each Group of 20 DID Numbers			UEPDC	ND4	0.00						11.90			1.83	
	DID Numbers, Non- consecutive DID Numbers , Per Number			UEPDC	ND5	0.00						11.90			1.83	
	Reserve Non-Consecutive DID Nos.			UEPDC	ND6	0.00	0.00	0.00				11.90			1.83	
	Reserve DID Numbers			UEPDC	NDV	0.00	0.00	0.00				11.90			1.83	
Dedicated DS1 (Interoffice Channel Mileage) - FX/FCO for 4-Wire DS1 Digital Loop with 4-Wire DDITS Trunk Port																
	Interoffice Channel Mileage - Fixed rate 0-8 miles (Facilities Termination)			UEPDC	1LNO1	88.44	105.54	98.47	21.47	19.05		11.90			1.83	
	Interoffice Channel Mileage - Additional rate per mile - 0-8 miles			UEPDC	1LNOA	0.1856	0.00	0.00								
	Interoffice Channel Mileage - Fixed rate 9-25 miles (Facilities Termination)			UEPDC	1LNO2	0.00	0.00	0.00								
	Interoffice Channel Mileage - Additional rate per mile - 9-25 miles			UEPDC	1LNOB	0.1856	0.00	0.00								
	Interoffice Channel Mileage - Fixed rate 25+ miles (Facilities Termination)			UEPDC	1LNO3	0.00	0.00	0.00	0.00							

CATEGORY	RATE ELEMENTS	Interim	Zone	BCS	USOC	RATES($) Rec	Nonrecurring First	Nonrecurring Add'l	Nonrecurring Disconnect First	Nonrecurring Disconnect Add'l	Svc Order Submitted Elec per LSR	Svc Order Submitted Manually per LSR	Incremental Charge - Manual Svc Order vs. Electronic-1st	Incremental Charge - Manual Svc Order vs. Electronic-Add'l	Incremental Charge - Manual Svc Order vs. Electronic-Disc 1st	Incremental Charge - Manual Svc Order vs. Electronic-Disc Add'l
											OSS Rates($)					
							First	Add'l	First	Add'l	SOMEC	SOMAN	SOMAN	SOMAN	SOMAN	SOMAN
	Interoffice Channel Mileage - Additional rate per mile - 25+ miles			UEPDC	1LNOC	0.1856	0.00	0.00								
	Local Number Portability, per DS0 Activated			UEPDC	LNPCP	3.15	0.00	0.00	0.00							
	Central Office Termininating Point			UEPDC	CTG	0.00										
	4-WIRE DS1 LOOP WITH CHANNELIZATION WITH PORT															
	System is 1 DS1 Loop, 1 D4 Channel Bank, and up to 24 Feature Activations															
	Each System can have up to 24 combinations of rates depending on type and number of ports used															
	UNE DS1 Loop															
	4-Wire DS1 Loop - UNE Zone 1		1	UEPMG	USLDC	73.44	0.00	0.00								
	4-Wire DS1 Loop - UNE Zone 2		2	UEPMG	USLDC	99.13	0.00	0.00								
	4-Wire DS1 Loop - UNE Zone 3		3	UEPMG	USLDC	191.51	0.00	0.00								
	UNE DSO Channelization Capacities (D4 Channel Bank Configurations)															
	24 DSO Channel Capacity - 1 per DS1			UEPMG	VUM24	118.06	0.00	0.00				11.90			1.83	
	48 DSO Channel Capacity - 1 per 2 DS1s			UEPMG	VUM48	236.12	0.00	0.00				11.90			1.83	
	96 DSO Channel Capacity -1per 4 DS1s			UEPMG	VUM96	472.24	0.00	0.00				11.90			1.83	
	144 DS0 Channel Capacity - 1 per 6 DS1s			UEPMG	VUM14	708.36	0.00	0.00				11.90			1.83	
	192 DS0 Channel Capacity -1 per 8 DS1s			UEPMG	VUM19	944.48	0.00	0.00				11.90			1.83	
	240 DS0 Channel Capacity - 1 per 10 DS1s			UEPMG	VUM20	1,180.60	0.00	0.00				11.90			1.83	
	288 DS0 Channel Capacity - 1 per 12 DS1s			UEPMG	VUM28	1,416.72	0.00	0.00				11.90			1.83	
	384 DS0 Channel Capacity - 1 per 16 DS1s			UEPMG	VUM38	1,888.96	0.00	0.00				11.90			1.83	
	480 DS0 Channel Capacity - 1 per 20 DS1s			UEPMG	VUM40	2,361.20	0.00	0.00				11.90			1.83	
	576 DS0 Channel Capacity -1 per 24 DS1s			UEPMG	VUM57	2,833.44	0.00	0.00				11.90			1.83	
	672 DS0 Channel Capacity - 1 per 28 DS1s			UEPMG	VUM67	3,305.68	0.00	0.00				11.90			1.83	
	Non-Recurring Charges (NRC) Associated with 4-Wire DS1 Loop with Channeliztion with Port - Conversion Charge Based on a System															
	A Minimum System configuration is One (1) DS1, One (1) D4 Channel Bank, and Up To 24 DSO Ports with Feature Activations.															
	Multiples of this configuration functioning as one are considered Add'l after the minimum system configuration is counted.															
	NRC - Conversion (Currently Combined) with or without BellSouth Allowed Changes			UEPMG	USAC4	0.00	96.77	4.24				11.90				
	System Additions at End User Locations Where 4-Wire DS1 Loop with Channelization with Port Combination Currently Exists and															
	New (Not Currently Combined) In GA, KY, LA, MS & TN Only															
	1 DS1/D4 Channel Bank - Add NRC for each Port and Assoc Fea Activation - New GA, LA, KY, MS, &TN Only			UEPMG	VUMD4	0.00	726.11	468.21	145.32	17.24		11.90				
	Bipolar 8 Zero Substitution															
	Clear Channel Capability Format, superframe - Subsequent Activity Only			UEPMG	CCOSF	0.00	0.00	655.00				11.90				
	Clear Channel Capability Format - Extended Superframe - Subsequent Activity Only			UEPMG	CCOEF	0.00	0.00	655.00				11.90				
	Alternate Mark Inversion (AMI)															
	Superframe Format			UEPMG	MCOSF	0.00	0.00	0.00								
	Extended Superframe Format			UEPMG	MCOPO	0.00	0.00	0.00								
	Exchange Ports Associated with 4-Wire DS1 Loop with Channelization with Port															
	Exchange Ports															
	Line Side Combination Channelized PBX Trunk Port - Business			UEPPX	UEPCX	1.38	0.00	0.00	0.00	0.00		11.90			1.83	
	Line Side Outward Channelized PBX Trunk Port - Business			UEPPX	UEPOX	1.38	0.00	0.00	0.00	0.00		11.90			1.83	
	Line Side Inward Only Channelized PBX Trunk Port without DID			UEPPX	UEP1X	1.38	0.00	0.00	0.00	0.00		11.90			1.83	
	2-Wire Trunk Side Unbundled Channelized DID Trunk Port			UEPPX	UEPDM	8.71	0.00	0.00	0.00	0.00		11.90			1.83	
	Feature Activations - Unbundled Loop Concentration															
	Feature (Service) Activation for each Line Side Port Terminated in D4 Bank			UEPPX	1PQWM	0.66	25.40	13.41	3.96	3.93		11.90			1.83	
	Feature (Service) Activation for each Trunk Side Port Terminated in D4 Bank			UEPPX	1PQWU	0.66	78.16	18.42	56.03	10.95		11.90			1.83	
	Telephone Number/ Group Establishment Charges for DID Service															
	DID Trunk Termination (1 per Port)			UEPPX	NDT	0.00	0.00	0.00				11.90				
	Estab Trk Grp and Provide 1st 20 DID Nos. (FL,GA, NC,& SC)			UEPPX	NDZ	0.00	0.00	0.00				11.90				
	DID Numbers - groups of 20 - Valid all States			UEPPX	ND4	0.00	0.00	0.00				11.90				
	Non-Consecutive DID Numbers - per number			UEPPX	ND5	0.00	0.00	0.00				11.90				
	Reserve Non-Consecutive DID Numbers			UEPPX	ND6	0.00	0.00	0.00				11.90				

CATEGORY	RATE ELEMENTS	Interim	Zone	BCS	USOC	RATES($)					Svc Order Submitted Elec per LSR	Svc Order Submitted Manually per LSR	Incremental Charge - Manual Svc Order vs. Electronic-1st	Incremental Charge - Manual Svc Order vs. Electronic-Add'l	Incremental Charge - Manual Svc Order vs. Electronic-Disc 1st	Incremental Charge - Manual Svc Order vs. Electronic-Disc Add'l
						Rec	Nonrecurring		Nonrecurring Disconnect		OSS Rates($)					
							First	Add'l	First	Add'l	SOMEC	SOMAN	SOMAN	SOMAN	SOMAN	SOMAN
	Reserve DID Numbers			UEPPX	NDV	0.00	0.00	0.00				11.90				
	Local Number Portability															
	Local Number Portability - 1 per port			UEPPX	LNPCP	3.15	0.00	0.00								
	FEATURES - Vertical and Optional															
	Local Switching Features Offered with Line Side Ports Only															
	All Features Available			UEPPX	UEPVF	2.26	0.00	0.00				11.90			1.83	
UNBUNDLED PORT LOOP COMBINATIONS - MARKET RATES																
	Market Rates shall apply where BellSouth is not required to provide unbundled local switching or switch ports per FCC and/or State Commission rules.															
	These scenarios include:															
	1. Unbundled port/loop combinations that are Not Currently Combined in Alabama, Florida and North Carolina.															
	2. Unbundled port/loop combinations that are Currently Combined or Not Currently Combined in Zone 1 of the Top 8 MSAS in BellSouth's region for end users with 4 or more DS0 equivalent lines.															
	The Top 8 MSAs in BellSouth's region are: FL (Orlando, Ft. Lauderdale, Miami); GA (Atlanta); LA (New Orleans); NC (Greensboro-Winston Salem-Highpoint/Charlotte-Gastonia-Rock Hill); TN (Nashville).															
	BellSouth currently is developing the billing capability to mechanically bill the recurring and non-recurring Market Rates in this section except for nonrecurring charges for not currently combined in AL, FL and NC. In the interim where BellSouth cannot bill Market Rates, BellSouth shall bill the rates in the Cost-Based section preceding in lieu of the Market Rates and reserves the right to true-up the billing difference.															
	The Market Rate for unbundled ports includes all available features in all states.															
	End Office and Tandem Switching Usage and Common Transport Usage rates in the Port section of this rate exhibit shall apply to all combinations of loop/port network elements except for UNE Coin Port/Loop Combinations which have a flat rate usage charge (USOC: URECU).															
	For Not Currently Combined scenarios where Market Rates apply, the Nonrecurring charges are listed in the First and Additional NRC columns for each Port USOC. For Currently Combined scenarios, the Nonrecurring charges are listed in the NRC - Currently Combined section. Additional NRCs may apply also and are categorized accordingly.															
	2-WIRE VOICE GRADE LOOP WITH 2-WIRE LINE PORT (RES)															
	UNE Port/Loop Combination Rates															
	2-Wire VG Loop/Port Combo - Zone 1		1			26.94										
	2-Wire VG Loop/Port Combo - Zone 2		2			31.06										
	2-Wire VG Loop/Port Combo - Zone 3		3			45.87										
	UNE Loop Rates															
	2-Wire Voice Grade Loop (SL1) - Zone 1		1	UEPRX	UEPLX	12.94										
	2-Wire Voice Grade Loop (SL1) - Zone 2		2	UEPRX	UEPLX	17.06										
	2-Wire Voice Grade Loop (SL1) - Zone 3		3	UEPRX	UEPLX	31.87										
	2-Wire Voice Grade Line Port (Res)															
	2-Wire voice unbundled port - residence			UEPRX	UEPRL	14.00	90.00	90.00				11.90				
	2-Wire voice unbundled port with Caller ID - res			UEPRX	UEPRC	14.00	90.00	90.00				11.90				
	2-Wire voice unbundled port outgoing only - res			UEPRX	UEPRO	14.00	90.00	90.00				11.90				
	2-Wire voice unbundled Florida Area Calling with Caller ID - res			UEPRX	UEPAF	14.00	90.00	90.00				11.90				
	2-Wire voice unbundles res, low usage line port with Caller ID (LUM)			UEPRX	UEPAP	14.00	90.00	90.00				11.90				
	LOCAL NUMBER PORTABILITY															
	Local Number Portability (1 per port)			UEPRX	LNPCX	0.35										
	FEATURES															
	All Features Offered			UEPRX	UEPVF	0.00	0.00	0.00				11.90				
	2-Wire Voice Grade Loop / Line Port Combination - Switch-as-is			UEPRX	USAC2		41.50	41.50				11.90				
	2-Wire Voice Grade Loop / Line Port Combination - Switch with change			UEPRX	USACC		41.50	41.50				11.90				
	ADDITIONAL NRCs															
	NRC - 2-Wire Voice Grade Loop/Line Port Combination - Subsequent			UEPRX	USAS2		0.00	0.00				11.90				
	2-WIRE VOICE GRADE LOOP WITH 2-WIRE LINE PORT (BUS)															
	UNE Port/Loop Combination Rates															
	2-Wire VG Loop/Port Combo - Zone 1		1			26.94										
	2-Wire VG Loop/Port Combo - Zone 2		2			31.06										
	2-Wire VG Loop/Port Combo - Zone 3		3			45.87										
	UNE Loop Rates															
	2-Wire Voice Grade Loop (SL1) - Zone 1		1	UEPBX	UEPLX	12.94										
	2-Wire Voice Grade Loop (SL1) - Zone 2		2	UEPBX	UEPLX	17.06										
	2-Wire Voice Grade Loop (SL1) - Zone 3		3	UEPBX	UEPLX	31.87										
	2-Wire Voice Grade Line Port (Bus)															
	2-Wire voice unbundled port without Caller ID - bus			UEPBX	UEPBL	14.00	90.00	90.00				11.90				
	2-Wire voice unbundled port with Caller + E484 ID - bus			UEPBX	UEPBC	14.00	90.00	90.00				11.90				

CATEGORY	RATE ELEMENTS	Interim	Zone	BCS	USOC	RATES($) Rec	Nonrecurring First	Nonrecurring Add'l	Nonrecurring Disconnect First	Nonrecurring Disconnect Add'l	Svc Order Submitted Elec per LSR SOMEC	Svc Order Submitted Manually per LSR SOMAN	Incremental Charge - Manual Svc Order vs. Electronic-1st SOMAN	Incremental Charge - Manual Svc Order vs. Electronic-Add'l SOMAN	Incremental Charge - Manual Svc Order vs. Electronic-Disc 1st SOMAN	Incremental Charge - Manual Svc Order vs. Electronic-Disc Add'l SOMAN
													OSS Rates($)			
	2-Wire voice unbundled port outgoing only - bus			UEPBX	UEPBO	14.00	90.00	90.00				11.90				
LOCAL NUMBER PORTABILITY																
	Local Number Portability (1 per port)			UEPBX	LNPCX	0.35										
NONRECURRING CHARGES - CURRENTLY COMBINED																
	2-Wire Voice Grade Loop / Line Port Combination - Switch-as-is			UEPBX	USAC2		41.50	41.50				11.90				
	2-Wire Voice Grade Loop / Line Port Combination - Switch with change			UEPBX	USACC		41.50	41.50				11.90				
ADDITIONAL NRCs																
	NRC - 2-Wire Voice Grade Loop/Line Port Combination - Subsequent			UEPBX	USAS2		0.00	0.00				11.90				
2-WIRE VOICE GRADE LOOP WITH 2-WIRE LINE PORT (RES - PBX)																
UNE Port/Loop Combination Rates																
	2-Wire VG Loop/Port Combo - Zone 1		1			26.94										
	2-Wire VG Loop/Port Combo - Zone 2		2			31.06										
	2-Wire VG Loop/Port Combo - Zone 3		3			45.87										
UNE Loop Rates																
	2-Wire Voice Grade Loop (SL1) - Zone 1		1	UEPRG	UEPLX	12.94										
	2-Wire Voice Grade Loop (SL1) - Zone 2		2	UEPRG	UEPLX	17.06										
	2-Wire Voice Grade Loop (SL1) - Zone 3		3	UEPRG	UEPLX	31.87										
2-Wire Voice Grade Line Port Rates (RES - PBX)																
	2-Wire VG Unbundled Combination 2-Way PBX Trunk Port - Res			UEPRG	UEPRD	14.00	90.00	90.00				11.90				
LOCAL NUMBER PORTABILITY																
	Local Number Portability (1 per port)			UEPRG	LNPCP	3.15	0.00	0.00								
FEATURES																
	All Features Offered			UEPRG	UEPVF	0.00	0.00	0.00				11.90				
NONRECURRING CHARGES - CURRENTLY COMBINED																
	2-Wire Voice Grade Loop/ Line Port Combination - Switch-As-Is			UEPRG	USAC2		41.50	41.50				11.90				
	2-Wire Voice Grade Loop/ Line Port Combination - Switch with Change			UEPRG	USACC		41.50	41.50				11.90				
ADDITIONAL NRCs																
	2 Wire Loop/Line Side Port Combination - Non feature - Subsequent Activity- Nonrecurring						0.00	0.00				11.90				
	PBX Subsequent Activity - Change/Rearrange Multiline Hunt Group						7.09	7.09				11.90				
2-WIRE VOICE GRADE LOOP WITH 2-WIRE LINE PORT (BUS - PBX)																
UNE Port/Loop Combination Rates																
	2-Wire VG Loop/Port Combo - Zone 1		1			26.94										
	2-Wire VG Loop/Port Combo - Zone 2		2			31.06										
	2-Wire VG Loop/Port Combo - Zone 3		3			45.87										
UNE Loop Rates																
	2-Wire Voice Grade Loop (SL1) - Zone 1		1	UEPPX	UEPLX	12.94										
	2-Wire Voice Grade Loop (SL1) - Zone 2		2	UEPPX	UEPLX	17.06										
	2-Wire Voice Grade Loop (SL1) - Zone 3		3	UEPPX	UEPLX	31.87										
2-Wire Voice Grade Line Port Rates (BUS - PBX)																
	Line Side Unbundled Combination 2-Way PBX Trunk Port - Bus			UEPPX	UEPPC	14.00	90.00	90.00				11.90				
	Line Side Unbundled Outward PBX Trunk Port - Bus			UEPPX	UEPPO	14.00	90.00	90.00				11.90				
	Line Side Unbundled Incoming PBX Trunk Port - Bus			UEPPX	UEPP1	14.00	90.00	90.00				11.90				
	2-Wire Voice Unbundled PBX LD Terminal Ports			UEPPX	UEPLD	14.00	90.00	90.00				11.90				
	2-Wire Voice Unbundled 2-Way Combination PBX Usage Port			UEPPX	UEPXA	14.00	90.00	90.00				11.90				
	2-Wire Voice Unbundled PBX Toll Terminal Hotel Ports			UEPPX	UEPXB	14.00	90.00	90.00				11.90				
	2-Wire Voice Unbundled PBX LD DDD Terminals Port			UEPPX	UEPXC	14.00	90.00	90.00				11.90				
	2-Wire Voice Unbundled PBX LD Terminal Switchboard Port			UEPPX	UEPXD	14.00	90.00	90.00				11.90				
	2-Wire Voice Unbundled PBX LD Terminal Switchboard IDD Capable Port			UEPPX	UEPXE	14.00	90.00	90.00				11.90				

CATEGORY	RATE ELEMENTS	Interim	Zone	BCS	USOC	RATES($) Rec	Nonrecurring First	Nonrecurring Add'l	Nonrecurring Disconnect First	Nonrecurring Disconnect Add'l	Svc Order Submitted Elec per LSR	Svc Order Submitted Manually per LSR	Incremental Charge - Manual Svc Order vs. Electronic- 1st	Incremental Charge - Manual Svc Order vs. Electronic- Add'l	Incremental Charge - Manual Svc Order vs. Electronic- Disc 1st	Incremental Charge - Manual Svc Order vs. Electronic- Disc Add'l
											OSS Rates($)					
											SOMEC	SOMAN	SOMAN	SOMAN	SOMAN	SOMAN
	2-Wire Voice Unbundled 2-Way PBX Hotel/Hospital Economy Administrative Calling Port			UEPPX	UEPXL	14.00	90.00	90.00				11.90				
	2-Wire Voice Unbundled 2-Way PBX Hotel/Hospital Economy Room Calling Port			UEPPX	UEPXM	14.00	90.00	90.00				11.90				
	2-Wire Voice Unbundled 1-Way Outgoing PBX Hotel/Hospital Discount Room Calling Port			UEPPX	UEPXO	14.00	90.00	90.00				11.90				
	2-Wire Voice Unbundled 1-Way Outgoing PBX Measured Port			UEPPX	UEPXS	14.00	90.00	90.00				11.90				
LOCAL NUMBER PORTABILITY																
	Local Number Portability (1 per port)			UEPPX	LNPCP	3.15	0.00	0.00								
FEATURES																
	All Features Offered			UEPPX	UEPVF	0.00	0.00	0.00				11.90				
NONRECURRING CHARGES - CURRENTLY COMBINED																
	2-Wire Voice Grade Loop/ Line Port Combination - Switch-As-Is			UEPPX	USAC2		41.50	41.50				11.90				
	2-Wire Voice Grade Loop/ Line Port Combination - Switch with Change			UEPPX	USACC		41.50	41.50				11.90				
ADDITIONAL NRCs																
	2-Wire Voice Grade Loop/ Line Port Combination - Subsequent			UEPPX	USAS2	0.00	0.00	0.00				11.90				
	2 Wire Loop/Line Side Port Combination - Non feature - Subsequent Activity- Nonrecurring						0.00	0.00				11.90				
	PBX Subsequent Activity - Change/Rearrange Multiline Hunt Group						7.09	7.09				11.90				
2-WIRE VOICE GRADE LOOP WITH 2-WIRE ANALOG LINE COIN PORT																
UNE Port/Loop Combination Rates																
	2-Wire VG Coin Port/Loop Combo – Zone 1		1			26.94										
	2-Wire VG Coin Port/Loop Combo – Zone 2		2			31.06										
	2-Wire VG Coin Port/Loop Combo – Zone 3		3			45.87										
UNE Loop Rates																
	2-Wire Voice Grade Loop (SL1) - Zone 1		1	UEPCO	UEPLX	12.94										
	2-Wire Voice Grade Loop (SL1) - Zone 2		2	UEPCO	UEPLX	17.06										
	2-Wire Voice Grade Loop (SL1) - Zone 3		3	UEPCO	UEPLX	31.87										
2-Wire Voice Grade Line Port Rates (Coin)																
	2-Wire Coin 2-Way with Operator Screening and Blocking: 011, 900/976, 1+DDD (FL)			UEPCO	UEP2F	14.00	90.00	90.00				11.90				
	2-Wire Coin 2-Way with Operator Screening and 011 Blocking (FL)			UEPCO	UEPFA	14.00	90.00	90.00				11.90				
	2-Wire Coin 2-Way with Operator Screening and Blocking: 900/976, 1+DDD, 011+, and Local (FL)			UEPCO	UEPCG	14.00	90.00	90.00				11.90				
	2-Wire Coin Outward with Operator Screening and 011 Blocking (AL, FL)			UEPCO	UEPRK	14.00	90.00	90.00				11.90				
	2-Wire Coin Outward with Operator Screening and Blocking: 900/976, 1+DDD, 011+ (FL)			UEPCO	UEPOF	14.00	90.00	90.00				11.90				
	2-Wire Coin Outward with Operator Screening and Blocking: 900/976, 1+DDD, 011+, and Local (FL, GA)			UEPCO	UEPCQ	14.00	90.00	90.00				11.90				
LOCAL NUMBER PORTABILITY																
	Local Number Portability (1 per port)			UEPCO	LNPCX	0.35										
NONRECURRING CHARGES - CURRENTLY COMBINED																
	2-Wire Voice Grade Loop/ Line Port Combination - Switch-As-Is			UEPCO	USAC2		41.50	41.50				11.90				
	2-Wire Voice Grade Loop/ Line Port Combination - Switch with Change			UEPCO	USACC		41.50	41.50								
ADDITIONAL NRCs																
	2-Wire Voice Grade Loop/ Line Port Combination - Subsequent			UEPCO	USAS2		0.00	0.00				11.90				
UNBUNDLED PORT/LOOP COMBINATIONS - MARKET BASED RATES																
2-WIRE VOICE GRADE LOOP- BUS ONLY - WITH 2-WIRE DID TRUNK PORT																
UNE Port/Loop Combination Rates																
	2-Wire VG Loop/2-Wire DID Trunk Port Combo - UNE Zone 1		1			69.50										

UNBUNDLED NETWORK ELEMENTS - Florida

Attachment: 2 | Exhibit: B

CATEGORY	RATE ELEMENTS	Interim	Zone	BCS	USOC	RATES($) Rec	Nonrecurring First	Nonrecurring Add'l	Nonrecurring Disconnect First	Nonrecurring Disconnect Add'l	Svc Order Submitted Elec per LSR	Svc Order Submitted Manually per LSR	OSS Rates($) Incremental Charge - Manual Svc Order vs. Electronic-1st	OSS Rates($) Incremental Charge - Manual Svc Order vs. Electronic-Add'l	OSS Rates($) Incremental Charge - Manual Svc Order vs. Electronic-Disc 1st	OSS Rates($) Incremental Charge - Manual Svc Order vs. Electronic-Disc Add'l
											SOMEC	SOMAN	SOMAN	SOMAN	SOMAN	SOMAN
	2-Wire VG Loop/2-Wire DID Trunk Port Combo - UNE Zone 2		2			74.57										
	2-Wire VG Loop/2-Wire DID Trunk Port Combo - UNE Zone 3		3			92.82										
UNE Loop Rates																
	2-Wire Analog Voice Grade Loop - (SL2) - UNE Zone 1		1	UEPPX	UECD1	14.50						11.90			1.83	
	2-Wire Analog Voice Grade Loop - (SL2) - UNE Zone 2		2	UEPPX	UECD1	19.57						11.90			1.83	
	2-Wire Analog Voice Grade Loop - (SL2) - UNE Zone 3		3	UEPPX	UECD1	37.82						11.90			1.83	
UNE Port Rate																
	Exchange Ports - 2-Wire DID Port			UEPPX	UEPD1	55.00	850.00	75.00				11.90			1.83	
NONRECURRING CHARGES - CURRENTLY COMBINED																
	2-Wire Voice Grade Loop / 2-Wire DID Trunk Port Combination - Switch-As-Is Top 8 MSAs only			UEPPX	USAC1		850.00	75.00				11.90				
	2-Wire Voice Grade Loop / 2-Wire DID Trunk Port Conversion with BellSouth Allowable Changes Top 8 MSAs only			UEPPX	USA1C		850.00	75.00				11.90				
ADDITIONAL NRCs																
	2-Wire DID Subsequent Activity - Add Trunks, Per Trunk			UEPPX	USAS1		32.26	32.26				11.90				
Telephone Number/Trunk Group Establisment Charges																
	DID Trunk Termination (One Per Port)			UEPPX	NDT	0.00	0.00	0.00				11.90			1.83	
	DID Numbers, Establish Trunk Group and Provide First Group of 20 DID Numbers			UEPPX	NDZ	0.00	0.00	0.00				11.90			1.83	
	Additional DID Numbers for each Group of 20 DID Numbers			UEPPX	ND4	0.00	0.00	0.00				11.90			1.83	
	DID Numbers, Non- consecutive DID Numbers , Per Number			UEPPX	ND5	0.00	0.00	0.00				11.90			1.83	
	Reserve Non-Consecutive DID numbers			UEPPX	ND6	0.00	0.00	0.00				11.90			1.83	
	Reserve DID Numbers			UEPPX	NDV	0.00	0.00	0.00				11.90			1.83	
LOCAL NUMBER PORTABILITY																
	Local Number Portability (1 per port)			UEPPX	LNPCP	3.15	0.00	0.00								
2-WIRE ISDN DIGITAL GRADE LOOP WITH 2-WIRE ISDN DIGITAL LINE SIDE PORT																
UNE Port/Loop Combination Rates																
	2W ISDN Digital Grade Loop/2W ISDN Digital Line Side Port - UNE Zone 1		1	UEPPB UEPPR		94.71										
	2W ISDN Digital Grade Loop/2W ISDN Digital Line Side Port - UNE Zone 2		2	UEPPB UEPPR		100.77										
	2W ISDN Digital Grade Loop/2W ISDN Digital Line Side Port - UNE Zone 3		3	UEPPB UEPPR		122.56										
UNE Loop Rates																
	2-Wire ISDN Digital Grade Loop - UNE Zone 1		1	UEPPB UEPPR	USL2X	24.71						11.90			1.83	
	2-Wire ISDN Digital Grade Loop - UNE Zone 2		2	UEPPB UEPPR	USL2X	30.77						11.90			1.83	
	2-Wire ISDN Digital Grade Loop - UNE Zone 3		3	UEPPB UEPPR	USL2X	52.56						11.90			1.83	
UNE Port Rate																
	Exchange Port - 2-Wire ISDN Line Side Port			UEPPB UEPPR	UEPPB	70.00	525.00	400.00				11.09			1.83	
NONRECURRING CHARGES - CURRENTLY COMBINED																
	2-Wire ISDN Digital Grade Loop / 2-Wire ISDN Line Side Port Combination - Conversion - Top 8 MSAs only			UEPPB UEPPR	USACB	0.00	215.00	215.00				11.90			1.83	
ADDITIONAL NRCs																
LOCAL NUMBER PORTABILITY																
	Local Number Portability (1 per port)			UEPPB UEPPR	LNPCX	0.35	0.00	0.00								
B-CHANNEL USER PROFILE ACCESS:																
	CVS/CSD (DMS/5ESS)			UEPPB UEPPR	U1UCA	0.00	0.00	0.00								
	CVS (EWSD)			UEPPB UEPPR	U1UCB	0.00	0.00	0.00								
	CSD			UEPPB UEPPR	U1UCC	0.00	0.00	0.00								
B-CHANNEL AREA PLUS USER PROFILE ACCESS: (AL,KY,LA,MS SC,MS, & TN)																
USER TERMINAL PROFILE																
	User Terminal Profile (EWSD only)			UEPPB UEPPR	U1UMA	0.00	0.00	0.00								
VERTICAL FEATURES																
	All Vertical Features - One per Channel B User Profile			UEPPB UEPPR	UEPVF	2.26	0.00	0.00				11.90				
INTEROFFICE CHANNEL MILEAGE																
	Interoffice Channel mileage each, including first mile and facilities termination			UEPPB UEPPR	M1GNC	18.4491	47.35	31.78	18.31	7.03		11.90			1.83	
	Interoffice Channel mileage each, additional mile			UEPPB UEPPR	M1GNM	0.0091	0.00	0.00				11.90			1.83	

CATEGORY	RATE ELEMENTS	Interim	Zone	BCS	USOC	RATES($) Rec	Nonrecurring First	Nonrecurring Add'l	Nonrecurring Disconnect First	Nonrecurring Disconnect Add'l	Svc Order Submitted Elec per LSR	Svc Order Submitted Manually per LSR	Incremental Charge - Manual Svc Order vs. Electronic-1st	Incremental Charge - Manual Svc Order vs. Electronic-Add'l	Incremental Charge - Manual Svc Order vs. Electronic-Disc 1st	Incremental Charge - Manual Svc Order vs. Electronic-Disc Add'l
											OSS Rates($)					
							First	Add'l	First	Add'l	SOMEC	SOMAN	SOMAN	SOMAN	SOMAN	SOMAN
	4-WIRE DS1 DIGITAL LOOP WITH 4-WIRE ISDN DS1 DIGITAL TRUNK PORT															
	UNE Port/Loop Combination Rates															
	4W DS1 Digital Loop/4W ISDN DS1 Digital Trunk Port - UNE Zone 1		1	UEPPP		973.44										
	4W DS1 Digital Loop/4W ISDN DS1 Digital Trunk Port - UNE Zone 2		2	UEPPP		999.13										
	4W DS1 Digital Loop/4W ISDN DS1 Digital Trunk Port - UNE Zone 3		3	UEPPP		1,091.51										
	UNE Loop Rates															
	4-Wire DS1 Digital Loop - UNE Zone 1		1	UEPPP	USL4P	73.44						11.90			1.83	
	4-Wire DS1 Digital Loop - UNE Zone 2		2	UEPPP	USL4P	99.13						11.90			1.83	
	4-Wire DS1 Digital Loop - UNE Zone 3		3	UEPPP	USL4P	191.51						11.90			1.83	
	UNE Port Rate															
	Exchange Ports - 4-Wire ISDN DS1 Port			UEPPP	UEPPP	900.00	1,150.00	1,150.00				11.90			1.83	
	NONRECURRING CHARGES - CURRENTLY COMBINED															
	4-Wire DS1 Digital Loop / 4-Wire ISDN DS1 Digital Trunk Port Combination - Conversion -Switch-As-Is Top 8 MSAs only			UEPPP	USACP	0.00	925.00	925.00				11.90			1.83	
	ADDITIONAL NRCs															
	4-Wire DS1 Loop/4-W ISDN Digtl Trk Port - Subsqt Actvy-Inward/two way tel nos within Std Allowance (except NC)			UEPPP	PR7TF		0.5412					11.90			1.83	
	4-Wire DS1 Loop / 4-Wire ISDN DS1 Digital Trunk Port - Outward Tel Numbers (All States except NC)			UEPPP	PR7TO		12.71	12.71				11.90			1.83	
	4-Wire DS1 Loop / 4-Wire ISDN DS1 Digital Trk Port - Subsequent Inward Tel Nos Above Std Allowance			UEPPP	PR7ZT		25.42	25.42				11.90			1.83	
	LOCAL NUMBER PORTABILITY															
	Local Number Portability (1 per port)			UEPPP	LNPCN	1.75										
	INTERFACE (Provsioning Only)															
	Voice/Data			UEPPP	PR71V	0.00	0.00	0.00								
	Digital Data			UEPPP	PR71D	0.00	0.00	0.00								
	Inward Data			UEPPP	PR71E	0.00	0.00	0.00								
	New or Additional "B" Channel															
	New or Additional - Voice/Data B Channel			UEPPP	PR7BV	0.00	20.00					11.90			1.83	
	New or Additional - Digital Data B Channel			UEPPP	PR7BF	0.00	20.00					11.90			1.83	
	New or Additional Inward Data B Channel			UEPPP	PR7BD	0.00	20.00					11.90			1.83	
	CALL TYPES															
	Inward			UEPPP	PR7C1	0.00	0.00	0.00								
	Outward			UEPPP	PR7C0	0.00	0.00	0.00								
	Two-way			UEPPP	PR7CC	0.00	0.00	0.00								
	Interoffice Channel Mileage															
	Fixed Each Including First Mile			UEPPP	1LN1A	88.6256	105.54	98.47	21.47	19.05		11.90			1.93	
	Each Airline-Fractional Additional Mile			UEPPP	1LN1B	0.1856										
	4-WIRE DS1 DIGITAL LOOP WITH 4-WIRE DDITS TRUNK PORT															
	UNE Port/Loop Combination Rates															
	4W DS1 Digital Loop/4W DDITS Trunk Port - Statewide		sw	UEPDC												
	4W DS1 Digital Loop/4W DDITS Trunk Port - UNE Zone 1		1	UEPDC		128.39						11.90			1.83	
	4W DS1 Digital Loop/4W DDITS Trunk Port - UNE Zone 2		2	UEPDC		154.08						11.90			1.83	
	4W DS1 Digital Loop/4W DDITS Trunk Port - UNE Zone 3		3	UEPDC		246.46						11.90			1.83	
	4W DS1 Digital Loop/4W DDITS Trunk Port - UNE Zone 4		4	UEPDC												
	UNE Loop Rates															
	4-Wire DS1 Digital Loop - Statewide		sw	UEPDC	USLDC											
	4-Wire DS1 Digital Loop - UNE Zone 1		1	UEPDC	USLDC	73.44						11.90			1.83	
	4-Wire DS1 Digital Loop - UNE Zone 2		2	UEPDC	USLDC	99.13						11.90			1.83	
	4-Wire DS1 Digital Loop - UNE Zone 3		3	UEPDC	USLDC	191.51						11.90			1.83	
	4-Wire DS1 Digital Loop - UNE Zone 4		4	UEPDC	USLDC											
	UNE Port Rate															
	4-Wire DDITS Digital Trunk Port			UEPDC	UDD1T	750.00	1,019.56	479.87	204.92	20.10		11.90			1.83	
	NONRECURRING CHARGES - CURRENTLY COMBINED															
	4-Wire DS1 Digital Loop / 4-Wire DDITS Trunk Port Combination - Switch-As-Is Top 8 MSAs only			UEPDC	USAC4		95.31	46.71				11.90			1.83	

UNBUNDLED NETWORK ELEMENTS - Florida													Attachment: 2		Exhibit: B	
CATEGORY	RATE ELEMENTS	Interim	Zone	BCS	USOC	RATES($)					Svc Order Submitted Elec per LSR	Svc Order Submitted Manually per LSR	Incremental Charge - Manual Svc Order vs. Electronic-1st	Incremental Charge - Manual Svc Order vs. Electronic-Add'l	Incremental Charge - Manual Svc Order vs. Electronic-Disc 1st	Incremental Charge - Manual Svc Order vs. Electronic-Disc Add'l
						Rec	Nonrecurring		Nonrecurring Disconnect		OSS Rates($)					
							First	Add'l	First	Add'l	SOMEC	SOMAN	SOMAN	SOMAN	SOMAN	SOMAN
	4-Wire DS1 Digital Loop / 4-Wire DDITS Trunk Port Combination - Conversion with DS1 Changes Top 8 MSAs only			UEPDC	USAWA		95.31	46.71				11.90			1.83	
	4-Wire DS1 Digital Loop / 4-Wire DDITS Trunk Port Combination - Conversion with Change - Trunk Top 8 MSAs only			UEPDC	USAWB		95.31	46.71				11.90			1.83	
ADDITIONAL NRCs																
	4-Wire DS1 Loop / 4-Wire DDITS Trunk Port - Subsequent Service Activity Per Service Order			UEPDC	USAS4											
	4-Wire DS1 Loop / 4-Wire DDITS Trunk Port - NRC - Subsequent Channel Activation/Chan - 2-Way Trunk			UEPDC	UDTTA		15.69	15.69				11.90			1.83	
	4-Wire DS1 Loop / 4-Wire DDITS Trunk Port - Subsequent Channel Activation/Chan - 1-Way Outward Trunk			UEPDC	UDTTB		15.69	15.69				11.90			1.83	
	4-Wire DS1 Loop / 4-Wire DDITS Trunk Port - Subsqnt Channel Activation/Chan Inward Trunk w/out DID			UEPDC	UDTTC		15.69	15.69				11.90			1.83	
	4-Wire DS1 Loop / 4-Wire DDITS Trunk Port - Subsqnt Chan Activation Per Chan - Inward Trunk with DID			UEPDC	UDTTD		15.69	15.69				11.90			1.83	
	4-Wire DS1 Loop / 4-Wire DDITS Trunk Port - Subsqnt Chan Activation / Chan - 2-Way DID w User Trans			UEPDC	UDTTE		15.69	15.69				11.90			1.83	
BIPOLAR 8 ZERO SUBSTITUTION																
	B8ZS -Superframe Format			UEPDC	CCOSF		0.00	655.00				11.90			1.83	
	B8ZS - Extended Superframe Format			UEPDC	CCOEF		0.00	655.00				11.90			1.83	
Alternate Mark Inversion																
	AMI -Superframe Format			UEPDC	MCOSF		0.00	0.00								
	AMI - Extended SuperFrame Format			UEPDC	MCOPO		0.00	0.00								
Telephone Number/Trunk Group Establisment Charges																
	Telephone Number for 2-Way Trunk Group			UEPDC	UDTGX	0.00						11.90			1.83	
	Telephone Number for 1-Way Outward Trunk Group			UEPDC	UDTGY	0.00						11.90			1.83	
	Telephone Number for 1-Way Inward Trunk Group Without DID			UEPDC	UDTGZ	0.00						11.90			1.83	
	DID Numbers, Establish Trunk Group and Provide First Group of 20 DID Numbers			UEPDC	NDZ	0.00	0.00	0.00				11.90			1.83	
	DID Numbers for each Group of 20 DID Numbers			UEPDC	ND4	0.00						11.90			1.83	
	DID Numbers, Non- consecutive DID Numbers , Per Number			UEPDC	ND5	0.00						11.90			1.83	
	Reserve Non-Consecutive DID Nos.			UEPDC	ND6	0.00	0.00	0.00				11.90			1.83	
	Reserve DID Numbers			UEPDC	NDV	0.00	0.00	0.00				11.90			1.83	
Dedicated DS1 (Interoffice Channel Mileage) -																
FX/FCO for 4-Wire DS1 Digital Loop with 4-Wire DDITS Trunk Port																
	Interoffice Channel Mileage - Fixed rate 0-8 miles (Facilities Termination)			UEPDC	1LNO1	88.44	105.54	98.47	21.47	19.05		11.90			1.83	
	Interoffice Channel Mileage - Additional rate per mile - 0-8 miles			UEPDC	1LNOA	0.1856	0.00	0.00								
	Interoffice Channel Mileage - Fixed rate 9-25 miles (Facilities Termination)			UEPDC	1LNO2	0.00	0.00	0.00								
	Interoffice Channel Mileage - Additional rate per mile - 9-25 miles			UEPDC	1LNOB	0.1856	0.00	0.00								
	Interoffice Channel Mileage - Fixed rate 25+ miles (Facilities Termination)			UEPDC	1LNO3	0.00	0.00	0.00	0.00							
	Interoffice Channel Mileage - Additional rate per mile - 25+ miles			UEPDC	1LNOC	0.1856	0.00	0.00								
	Local Number Portability, per DS0 Activated			UEPDC	LNPCP	3.15	0.00	0.00	0.00							
	Central Office Termininating Point			UEPDC	CTG	0.00										
4-WIRE DS1 LOOP WITH CHANNELIZATION WITH PORT																
System is 1 DS1 Loop, 1 D4 Channel Bank, and up to 24 Feature Activations																
A system can have various rate combinations based on type and number of ports used																
UNE DS1 Loop																
	4-Wire DS1 Loop - UNE Zone 1		1	UEPMG	USLDC	73.44	0.00	0.00								
	4-Wire DS1 Loop - UNE Zone 2		2	UEPMG	USLDC	99.13	0.00	0.00								
	4-Wire DS1 Loop - UNE Zone 3		3	UEPMG	USLDC	191.51	0.00	0.00								
UNE DSO Channelization Capacities (D4 Channel Bank Configurations)																

UNBUNDLED NETWORK ELEMENTS - Florida													Attachment: 2		Exhibit: B	
CATEGORY	RATE ELEMENTS	Interim	Zone	BCS	USOC	RATES($)					Svc Order Submitted Elec per LSR	Svc Order Submitted Manually per LSR	Incremental Charge - Manual Svc Order vs. Electronic-1st	Incremental Charge - Manual Svc Order vs. Electronic-Add'l	Incremental Charge - Manual Svc Order vs. Electronic-Disc 1st	Incremental Charge - Manual Svc Order vs. Electronic-Disc Add'l
						Rec	Nonrecurring		Nonrecurring Disconnect		OSS Rates($)					
							First	Add'l	First	Add'l	SOMEC	SOMAN	SOMAN	SOMAN	SOMAN	SOMAN
	24 DSO Channel Capacity - 1 per DS1			UEPMG	VUM24	118.06	0.00	0.00				11.90			1.83	
	48 DSO Channel Capacity - 1 per 2 DS1s			UEPMG	VUM48	236.12	0.00	0.00				11.90			1.83	
	96 DSO Channel Capacity -1per 4 DS1s			UEPMG	VUM96	472.24	0.00	0.00				11.90			1.83	
	144 DS0 Channel Capacity - 1 per 6 DS1s			UEPMG	VUM14	708.36	0.00	0.00				11.90			1.83	
	192 DS0 Channel Capacity -1 per 8 DS1s			UEPMG	VUM19	944.48	0.00	0.00				11.90			1.83	
	240 DS0 Channel Capacity - 1 per 10 DS1s			UEPMG	VUM20	1,180.60	0.00	0.00				11.90			1.83	
	288 DS0 Channel Capacity - 1 per 12 DS1s			UEPMG	VUM28	1,416.72	0.00	0.00				11.90			1.83	
	384 DS0 Channel Capacity - 1 per 16 DS1s			UEPMG	VUM38	1,888.96	0.00	0.00				11.90			1.83	
	480 DS0 Channel Capacity - 1 per 20 DS1s			UEPMG	VUM40	2,361.20	0.00	0.00				11.90			1.83	
	576 DS0 Channel Capacity -1 per 24 DS1s			UEPMG	VUM57	2,833.44	0.00	0.00				11.90			1.83	
	672 DS0 Channel Capacity - 1 per 28 DS1s			UEPMG	VUM67	3,305.68	0.00	0.00				11.90			1.83	
	Non-Recurring Charges (NRC) Associated with 4-Wire DS1 Loop with Channeliztion with Port - Conversion Charge Based on a System															
	A Minimum System configuration is One (1) DS1, One (1) D4 Channel Bank, and Up To 24 DSO Ports with Feature Activations.															
	Multiples of this configuration functioning as one are considered Add'l after the minimum system configuration is counted.															
	NRC - Conversion (Currently Combined) with or without BellSouth Allowed Changes - Top 8 MSAs Only			UEPMG	USAC4	0.00	450.00	50.00				11.90				
	System Additions Where Currently Combined and New (Not Currently Combined)															
	In Top 8 MSAs and AL, FL, and NC Only															
	1 DS1/D4 Channel Bank - Add NRC for each Port and Assoc Fea Activation -			UEPMG	VUMD4	0.00	950.00	600.00	200.00	30.00		11.90				
	Bipolar 8 Zero Substitution											11.90				
	Clear Channel Capability Format, superframe - Subsequent Activity Only			UEPMG	CCOSF	0.00	0.00	655.00				11.90				
	Clear Channel Capability Format - Extended Superframe - Subsequent Activity Only			UEPMG	CCOEF	0.00	0.00	655.00				11.90				
	Alternate Mark Inversion (AMI)															
	Superframe Format			UEPMG	MCOSF	0.00	0.00	0.00								
	Extended Superframe Format			UEPMG	MCOPO	0.00	0.00	0.00								
	Exchange Ports Associated with 4-Wire DS1 Loop with Channelization with Port															
	Exchange Ports															
	Line Side Combination Channelized PBX Trunk Port - Business			UEPPX	UEPCX	14.00	0.00	0.00	0.00	0.00		11.90			1.83	
	Line Side Outward Channelized PBX Trunk Port - Business			UEPPX	UEPOX	14.00	0.00	0.00	0.00	0.00		11.90			1.83	
	Line Side Inward Only Channelized PBX Trunk Port without DID			UEPPX	UEP1X	14.00	0.00	0.00	0.00	0.00		11.90			1.83	
	2-Wire Trunk Side Unbundled Channelized DID Trunk Port			UEPPX	UEPDM	55.00	0.00	0.00	0.00	0.00		11.90			1.83	
	Feature Activations - Unbundled Loop Concentration															
	Feature (Service) Activation for each Line Side Port Terminated in D4 Bank			UEPPX	1PQWM	0.66	40.00	20.00	6.00	5.00		11.90			1.83	
	Feature (Service) Activation for each Trunk Side Port Terminated in D4 Bank			UEPPX	1PQWU	0.66	110.00	30.00	65.00	20.00		11.90			1.83	
	Telephone Number/ Group Establishment Charges for DID Service															
	DID Trunk Termination (1 per Port)			UEPPX	NDT	0.00	0.00	0.00				11.90				
	Estab Trk Grp and Provide 1st 20 DID Nos. (FL,GA, NC,& SC)			UEPPX	NDZ	0.00	0.00	0.00				11.90				
	DID Numbers - groups of 20 - Valid all States			UEPPX	ND4	0.00	0.00	0.00				11.90				
	Non-Consecutive DID Numbers - per number			UEPPX	ND5	0.00	0.00	0.00				11.90				
	Reserve Non-Consecutive DID Numbers			UEPPX	ND6	0.00	0.00	0.00				11.90				
	Reserve DID Numbers			UEPPX	NDV	0.00	0.00	0.00				11.90				
	Local Number Portability															
	Local Number Portability - 1 per port			UEPPX	LNPCP	3.15	0.00	0.00								
	FEATURES - Vertical and Optional															
	Local Switching Features Offered with Line Side Ports Only															
	All Features Available			UEPPX	UEPVF	2.26	0.00	0.00				11.90			1.83	
UNBUNDLED CENTREX PORT/LOOP COMBINATIONS - COST BASED RATES																
	1. Cost Based Rates are applied where BellSouth is required by FCC and/or State Commission rule to provide Unbundled Local Switching or Switch Ports.															
	2. Features shall apply to the Unbundled Port/Loop Combination - Cost Based Rate section in the same manner as they are applied to the Stand-Alone Unbundled Port section of this Rate Exhibit.															
	3. End Office and Tandem Switching Usage and Common Transport Usage rates in the Port section of this rate exhibit shall apply to all combinations of loop/port network elements except for UNE Coin Port/Loop Combinations.															

CATEGORY	RATE ELEMENTS	Interim	Zone	BCS	USOC	RATES($) Rec	Nonrecurring First	Nonrecurring Add'l	Nonrecurring Disconnect First	Nonrecurring Disconnect Add'l	Svc Order Submitted Elec per LSR	Svc Order Submitted Manually per LSR	Incremental Charge - Manual Svc Order vs. Electronic-1st	Incremental Charge - Manual Svc Order vs. Electronic-Add'l	Incremental Charge - Manual Svc Order vs. Electronic-Disc 1st	Incremental Charge - Manual Svc Order vs. Electronic-Disc Add'l
											OSS Rates($)					
							First	Add'l	First	Add'l	SOMEC	SOMAN	SOMAN	SOMAN	SOMAN	SOMAN
	For Georgia, Kentucky, Louisiana, MIssissippi and Tennessee, the recurring UNE Port and Loop charges listed apply to Currently Combined and Not Currently Combined Combos. The the first and additional Port nonrecurring charges apply to Not Currently Combined Combos for all states. In GA, KY, LA, MS and TN these nonrecurring charges are commission ordered cost based rates and in AL, FL, NC and SC these nonrecurring charges are Market Rates and are listed in the Market Rate section. For Currently Combined Combos in all other states, the nonrecurring charges shall be those identified in the Nonrecurring - Currently Combined sections.															
	5. Market Rates for Unbundled Centrex Port/Loop Combination will be negotiated on an Individual Case Basis, until further notice.															
	UNE-P CENTREX - 1AESS - (Valid in AL,FL,GA,KY,LA,MS,&TN only)															
	2-Wire VG Loop/2-Wire Voice Grade Port (Centrex) Combo															
	UNE Port/Loop Combination Rates (Non-Design)															
	2-Wire VG Loop/2-Wire Voice Grade Port (Centrex) Port Combo - Non-Design		1	UEP91		14.11										
	2-Wire VG Loop/2-Wire Voice Grade Port (Centrex)Port Combo - Non-Design		2	UEP91		18.23										
	2-Wire VG Loop/2-Wire Voice Grade Port (Centrex)Port Combo - Non-Design		3	UEP91		33.04										
	UNE Port/Loop Combination Rates (Design)															
	2-Wire VG Loop/2-Wire Voice Grade Port (Centrex) Port Combo - Design		1	UEP91		16.53										
	2-Wire VG Loop/2-Wire Voice Grade Port (Centrex)Port Combo - Design		2	UEP91		21.60										
	2-Wire VG Loop/2-Wire Voice Grade Port (Centrex)Port Combo - Design		3	UEP91		37.85										
	UNE Loop Rate															
	2-Wire Voice Grade Loop (SL 1) - Zone 1		1	UEP91	UECS1	12.94										
	2-Wire Voice Grade Loop (SL 1) - Zone 2		2	UEP91	UECS1	17.06										
	2-Wire Voice Grade Loop (SL 1) - Zone 3		3	UEP91	UECS1	31.87										
	2-Wire Voice Grade Loop (SL 2) - Zone 1		1	UEP91	UECS2	15.36										
	2-Wire Voice Grade Loop (SL 2) - Zone 2		2	UEP91	UECS2	20.43										
	2-Wire Voice Grade Loop (SL 2) - Zone 3		3	UEP91	UECS2	36.68										
	UNE Ports															
	All States (Except North Carolina and Sout Carolina)															
	2-Wire Voice Grade Port (Centrex) Basic Local Area			UEP91	UEPYA	1.17						11.90				
	2-Wire Voice Grade Port (Centrex 800 termination)Basic Local Area			UEP91	UEPYB	1.17						11.90				
	2-Wire Voice Grade Port (Centrex with Caller ID)1Basic Local Area			UEP91	UEPYH	1.17						11.90				
	2-Wire Voice Grade Port (Centrex from diff Serving Wire Center)2 Basic Local Area			UEP91	UEPYM	1.17						11.90				
	2-Wire Voice Grade Port, Diff Serving Wire Center - 800 Service Term - Basic Local Area			UEP91	UEPYZ	1.17						11.90				
	2-Wire Voice Grade Port terminated in on Megalink or equivalent - Basic Local Area			UEP91	UEPY9	1.17						11.90				
	2-Wire Voice Grade Port Terminated on 800 Service Term - Basic Local Area			UEP91	UEPY2	1.17						11.90				
	Georgia and Florida Only															
	2-Wire Voice Grade Port (Centrex)			UEP91	UEPHA	1.17						11.90				
	2-Wire Voice Grade Port (Centrex 800 termination)			UEP91	UEPHB	1.17						11.90				
	2-Wire Voice Grade Port (Centrex with Caller ID)1			UEP91	UEPHH	1.17						11.90				
	2-Wire Voice Grade Port (Centrex from diff Serving Wire Center)2			UEP91	UEPHM	1.17						11.90				
	2-Wire Voice Grade Port, Diff Serving Wire Center - 800 Service Term			UEP91	UEPHZ	1.17						11.90				
	2-Wire Voice Grade Port terminated in on Megalink or equivalent			UEP91	UEPH9	1.17						11.90				
	2-Wire Voice Grade Port Terminated on 800 Service Term			UEP91	UEPH2	1.17						11.90				
	Local Switching															
	Centrex Intercom Funtionality, per port			UEP91	URECS	0.7384										
	Local Number Portability															
	Local Number Portability (1 per port)			UEP91	LNPCC	0.35										
	Features															
	All Standard Features Offered, per port			UEP91	UEPVF	2.26						11.90				

UNBUNDLED NETWORK ELEMENTS - Florida													Attachment: 2		Exhibit: B	
CATEGORY	RATE ELEMENTS	Interim	Zone	BCS	USOC	RATES($)					Svc Order Submitted Elec per LSR	Svc Order Submitted Manually per LSR	Incremental Charge - Manual Svc Order vs. Electronic-1st	Incremental Charge - Manual Svc Order vs. Electronic-Add'l	Incremental Charge - Manual Svc Order vs. Electronic-Disc 1st	Incremental Charge - Manual Svc Order vs. Electronic-Disc Add'l
						Rec	Nonrecurring		Nonrecurring Disconnect		OSS Rates($)					
							First	Add'l	First	Add'l	SOMEC	SOMAN	SOMAN	SOMAN	SOMAN	SOMAN
	All Select Features Offered, per port			UEP91	UEPVS	0.00	370.70					11.90				
	All Centrex Control Features Offered, per port			UEP91	UEPVC	2.26						11.90				
NARS																
	Unbundled Network Access Register - Combination			UEP91	UARCX	0.00	0.00	0.00				11.90				
	Unbundled Network Access Register - Indial			UEP91	UAR1X	0.00	0.00	0.00				11.90				
	Unbundled Network Access Register - Outdial			UEP91	UAROX	0.00	0.00	0.00				11.90				
Miscellaneous Terminations																
2-Wire Trunk Side																
	Trunk Side Terminations, each			UEP91	CENA6	8.81										
Interoffice Channel Mileage - 2-Wire																
	Interoffice Channel Facilities Termination - Voice Grade			UEP91	MIGBC	25.32										
	Interoffice Channel mileage, per mile or fraction of mile			UEP91	MIGBM	0.0091										
Feature Activations (DS0) Centrex Loops on Channelized DS1 Service																
D4 Channel Bank Feature Activations																
	Feature Activation on D-4 Channel Bank Centrex Loop Slot			UEP91	1PQWS	0.66										
	Feature Activation on D-4 Channel Bank FX line Side Loop Slot			UEP91	1PQW6	0.66										
	Feature Activation on D-4 Channel Bank FX Trunk Side Loop Slot			UEP91	1PQW7	0.66										
	Feature Activation on D-4 Channel Bank Centrex Loop Slot - Different Wire Center			UEP91	1PQWP	0.66										
	Feature Activation on D-4 Channel Bank Private Line Loop Slot			UEP91	1PQWV	0.66										
	Feature Activation on D-4 Channel Bank Tjie Line/Trunk Loop Slot			UEP91	1PQWQ	0.66										
	Feature Activation on D-4 Channel Bank WATS Loop Slot			UEP91	1PQWA	0.66										
Non-Recurring Charges (NRC) Associated with UNE-P Centrex																
	Conversion - Currently Combined Switch-As-Is with allowed changes, per port			UEP91	USAC2		21.50	8.42				11.90				
	Conversion of Existing Centrex Common Block			UEP91	USACN		5.17	8.32				11.90				
	New Centrex Standard Common Block			UEP91	M1ACS	0.00	618.82					11.90				
	New Centrex Customized Common Block			UEP91	M1ACC	0.00	618.82					11.90				
	Secondary Block, per Block			UEP91	M2CC1	0.00	71.31					11.90				
	NAR Establishment Charge, Per Occasion			UEP91	URECA	0.00	66.48					11.90				
UNE-P CENTREX - 5ESS (Valid in All States)																
2-Wire VG Loop/2-Wire Voice Grade Port (Centrex) Combo																
UNE Port/Loop Combination Rates (Non-Design)																
	2-Wire VG Loop/2-Wire Voice Grade Port (Centrex) Port Combo - Non-Design		1	UEP95		14.11										
	2-Wire VG Loop/2-Wire Voice Grade Port (Centrex)Port Combo - Non-Design		2	UEP95		18.23										
	2-Wire VG Loop/2-Wire Voice Grade Port (Centrex)Port Combo - Non-Design		3	UEP95		33.04										
UNE Port/Loop Combination Rates (Design)																
	2-Wire VG Loop/2-Wire Voice Grade Port (Centrex) Port Combo - Design		1	UEP95		16.53										
	2-Wire VG Loop/2-Wire Voice Grade Port (Centrex)Port Combo - Design		2	UEP95		21.60										
	2-Wire VG Loop/2-Wire Voice Grade Port (Centrex)Port Combo - Design		3	UEP95		37.85										
UNE Loop Rate																
	2-Wire Voice Grade Loop (SL 1) - Zone 1		1	UEP95	UECS1	12.94										
	2-Wire Voice Grade Loop (SL 1) - Zone 2		2	UEP95	UECS1	17.06										
	2-Wire Voice Grade Loop (SL 1) - Zone 3		3	UEP95	UECS1	31.87										
	2-Wire Voice Grade Loop (SL 2) - Zone 1		1	UEP95	UECS2	15.36										
	2-Wire Voice Grade Loop (SL 2) - Zone 2		2	UEP95	UECS2	20.43										
	2-Wire Voice Grade Loop (SL 2) - Zone 3		3	UEP95	UECS2	36.68										
UNE Port Rate																
All States																

UNBUNDLED NETWORK ELEMENTS - Florida													Attachment: 2		Exhibit: B	
CATEGORY	RATE ELEMENTS	Interim	Zone	BCS	USOC	RATES($)					Svc Order Submitted Elec per LSR	Svc Order Submitted Manually per LSR	Incremental Charge - Manual Svc Order vs. Electronic-1st	Incremental Charge - Manual Svc Order vs. Electronic-Add'l	Incremental Charge - Manual Svc Order vs. Electronic-Disc 1st	Incremental Charge - Manual Svc Order vs. Electronic-Disc Add'l
						Rec	Nonrecurring		Nonrecurring Disconnect		OSS Rates($)					
							First	Add'l	First	Add'l	SOMEC	SOMAN	SOMAN	SOMAN	SOMAN	SOMAN
	2-Wire Voice Grade Port (Centrex) Basic Local Area			UEP95	UEPYA	1.17						11.90				
	2-Wire Voice Grade Port (Centrex 800 termination)			UEP95	UEPYB	1.17						11.90				
	2-Wire Voice Grade Port (Centrex with Caller ID)1Basic Local Area			UEP95	UEPYH	1.17						11.90				
	2-Wire Voice Grade Port (Centrex from diff Serving Wire Center)2 Basic Local Area			UEP95	UEPYM	1.17						11.90				
	2-Wire Voice Grade Port, Diff Serving Wire Center - 800 Service Term - Basic Local Area			UEP95	UEPYZ	1.17						11.90				
	2-Wire Voice Grade Port terminated in on Megalink or equivalent - Basic Local Area			UEP95	UEPY9	1.17						11.90				
	2-Wire Voice Grade Port Terminated on 800 Service Term - Basic Local Area			UEP95	UEPY2	1.17						11.90				
AL, KY, LA, MS, SC, & TN Only																
FL & GA Only																
	2-Wire Voice Grade Port (Centrex)			UEP95	UEPHA	1.17						11.90				
	2-Wire Voice Grade Port (Centrex 800 termination)			UEP95	UEPHB	1.17						11.90				
	2-Wire Voice Grade Port (Centrex with Caller ID)1			UEP95	UEPHH	1.17						11.90				
	2-Wire Voice Grade Port (Centrex from diff Serving Wire Center)2			UEP95	UEPHM	1.17						11.90				
	2-Wire Voice Grade Port, Diff Serving Wire Center - 800 Service Term			UEP95	UEPHZ	1.17						11.90				
	2-Wire Voice Grade Port terminated in on Megalink or equivalent			UEP95	UEPH9	1.17						11.90				
	2-Wire Voice Grade Port Terminated on 800 Service Term			UEP95	UEPH2	1.17						11.90				
Local Switching																
	Centrex Intercom Funtionality, per port			UEP95	URECS	0.7384										
Local Number Portability																
	Local Number Portability (1 per port)			UEP95	LNPCC	0.35										
Features																
	All Standard Features Offered, per port			UEP95	UEPVF	2.26										
	All Select Features Offered, per port			UEP95	UEPVS	0.00	370.70					11.90				
	All Centrex Control Features Offered, per port			UEP95	UEPVC	2.26										
NARS																
	Unbundled Network Access Register - Combination			UEP95	UARCX	0.00	0.00	0.00				11.90				
	Unbundled Network Access Register - Indial			UEP95	UAR1X	0.00	0.00	0.00				11.90				
	Unbundled Network Access Register - Outdial			UEP95	UAROX	0.00	0.00	0.00				11.90				
Miscellaneous Terminations																
2-Wire Trunk Side																
	Trunk Side Terminations, each			UEP95	CEND6	8.81										
4-Wire Digital (1.544 Megabits)																
	DS1 Circuit Terminations, each			UEP95	M1HD1	54.95										
	DS0 Channels Activated, each			UEP95	M1HDO	0.00	15.69					11.90				
Interoffice Channel Mileage - 2-Wire																
	Interoffice Channel Facilities Termination			UEP95	MIGBC	25.32										
	Interoffice Channel mileage, per mile or fraction of mile			UEP95	MIGBM	0.0091										
Feature Activations (DS0) Centrex Loops on Channelized DS1 Service																
D4 Channel Bank Feature Activations																
	Feature Activation on D-4 Channel Bank Centrex Loop Slot			UEP95	1PQWS	0.66										
	Feature Activation on D-4 Channel Bank FX line Side Loop Slot			UEP95	1PQW6	0.66										
	Feature Activation on D-4 Channel Bank FX Trunk Side Loop Slot			UEP95	1PQW7	0.66										
	Feature Activation on D-4 Channel Bank Centrex Loop Slot - Different Wire Center			UEP95	1PQWP	0.66										
	Feature Activation on D-4 Channel Bank Private Line Loop Slot			UEP95	1PQWV	0.66										
	Feature Activation on D-4 Channel Bank Tjie Line/Trunk Loop Slot			UEP95	1PQWQ	0.66										
	Feature Activation on D-4 Channel Bank WATS Loop Slot			UEP95	1PQWA	0.66										

UNBUNDLED NETWORK ELEMENTS - Florida													Attachment: 2		Exhibit: B	
CATEGORY	RATE ELEMENTS	Interim	Zone	BCS	USOC	RATES($)					Svc Order Submitted Elec per LSR	Svc Order Submitted Manually per LSR	Incremental Charge - Manual Svc Order vs. Electronic-1st	Incremental Charge - Manual Svc Order vs. Electronic-Add'l	Incremental Charge - Manual Svc Order vs. Electronic-Disc 1st	Incremental Charge - Manual Svc Order vs. Electronic-Disc Add'l
						Rec	Nonrecurring		Nonrecurring Disconnect		OSS Rates($)					
							First	Add'l	First	Add'l	SOMEC	SOMAN	SOMAN	SOMAN	SOMAN	SOMAN
Non-Recurring Charges (NRC) Associated with UNE-P Centrex																
	NRC Conversion Currently Combined Switch-As-Is with allowed changes, per port			UEP95	USAC2	0.00	21.50	8.42				11.90				
	Conversion of Existing Centrex Common Block, each			UEP95	USACN		5.17	8.32				11.90				
	New Centrex Standard Common Block			UEP95	M1ACS	0.00	618.82					11.90				
	New Centrex Customized Common Block			UEP95	M1ACC	0.00	618.82					11.90				
	NAR Establishment Charge, Per Occasion			UEP95	URECA	0.00	66.48					11.90				
UNE-P CENTREX - DMS100 (Valid in All States)																
2-Wire VG Loop/2-Wire Voice Grade Port (Centrex) Combo																
UNE Port/Loop Combination Rates (Non-Design)																
	2-Wire VG Loop/2-Wire Voice Grade Port (Centrex) Port Combo - Non-Design		1	UEP9D		14.11										
	2-Wire VG Loop/2-Wire Voice Grade Port (Centrex)Port Combo - Non-Design		2	UEP9D		18.23										
	2-Wire VG Loop/2-Wire Voice Grade Port (Centrex)Port Combo - Non-Design		3	UEP9D		33.04										
UNE Port/Loop Combination Rates (Design)																
	2-Wire VG Loop/2-Wire Voice Grade Port (Centrex) Port Combo - Design		1	UEP9D		16.53										
	2-Wire VG Loop/2-Wire Voice Grade Port (Centrex)Port Combo - Design		2	UEP9D		21.60										
	2-Wire VG Loop/2-Wire Voice Grade Port (Centrex)Port Combo - Design		3	UEP9D		37.85										
UNE Loop Rate																
	2-Wire Voice Grade Loop (SL 1) - Zone 1		1	UEP9D	UECS1	12.94										
	2-Wire Voice Grade Loop (SL 1) - Zone 2		2	UEP9D	UECS1	17.06										
	2-Wire Voice Grade Loop (SL 1) - Zone 3		3	UEP9D	UECS1	31.87										
	2-Wire Voice Grade Loop (SL 2) - Zone 1		1	UEP9D	UECS2	15.36										
	2-Wire Voice Grade Loop (SL 2) - Zone 2		2	UEP9D	UECS2	20.43										
	2-Wire Voice Grade Loop (SL 2) - Zone 3		3	UEP9D	UECS2	36.68										
UNE Port Rate																
ALL STATES																
	2-Wire Voice Grade Port (Centrex) Basic Local Area			UEP9D	UEPYA	1.17						11.90				
	2-Wire Voice Grade Port (Centrex 800 termination)Basic Local Area			UEP9D	UEPYB	1.17						11.90				
	2-Wire Voice Grade Port (Centrex / EBS-PSET)3Basic Local Area			UEP9D	UEPYC	1.17						11.90				
	2-Wire Voice Grade Port (Centrex / EBS-M5009)3Basic Local Area			UEP9D	UEPYD	1.17						11.90				
	2-Wire Voice Grade Port (Centrex / EBS-M5209))3 Basic Local Area			UEP9D	UEPYE	1.17						11.90				
	2-Wire Voice Grade Port (Centrex / EBS-M5112))3 Basic Local Area			UEP9D	UEPYF	1.17						11.90				
	2-Wire Voice Grade Port (Centrex / EBS-M5312))3Basic Local Area			UEP9D	UEPYG	1.17						11.90				
	2-Wire Voice Grade Port (Centrex / EBS-M5008))3 Basic Local Area			UEP9D	UEPYT	1.17						11.90				
	2-Wire Voice Grade Port (Centrex / EBS-M5208))3 Basic Local Area			UEP9D	UEPYU	1.17						11.90				
	2-Wire Voice Grade Port (Centrex / EBS-M5216))3 Basic Local Area			UEP9D	UEPYV	1.17						11.90				
	2-Wire Voice Grade Port (Centrex / EBS-M5316))3 Basic Local Area			UEP9D	UEPY3	1.17						11.90				
	2-Wire Voice Grade Port (Centrex with Caller ID) Basic Local Area			UEP9D	UEPYH	1.17						11.90				
	2-Wire Voice Grade Port (Centrex/Caller ID/Msg Wtg Lamp Indication))3 Basic Local Area			UEP9D	UEPYW	1.17						11.90				
	2-Wire Voice Grade Port (Centrex/Msg Wtg Lamp Indication))3 Basic Local Area			UEP9D	UEPYJ	1.17						11.90				

CATEGORY	RATE ELEMENTS	Interim	Zone	BCS	USOC	RATES($) Rec	Nonrecurring First	Nonrecurring Add'l	Nonrecurring Disconnect First	Nonrecurring Disconnect Add'l	Svc Order Submitted Elec per LSR SOMEC	Svc Order Submitted Manually per LSR SOMAN	Incremental Charge - Manual Svc Order vs. Electronic-1st SOMAN	Incremental Charge - Manual Svc Order vs. Electronic-Add'l SOMAN	Incremental Charge - Manual Svc Order vs. Electronic-Disc 1st SOMAN	Incremental Charge - Manual Svc Order vs. Electronic-Disc Add'l SOMAN
													OSS Rates($)			
	2-Wire Voice Grade Port (Centrex from diff Serving Wire Center) 2 Basic Local Area			UEP9D	UEPYM	1.17						11.90				
	2-Wire Voice Grade Port (Centrex/differ SWC /EBS-PSET)2, 3 Basic Local Area			UEP9D	UEPYO	1.17						11.90				
	2-Wire Voice Grade Port (Centrex/differ SWC /EBS-M5009)2, 3 Basic Local Area			UEP9D	UEPYP	1.17						11.90				
	2-Wire Voice Grade Port (Centrex/differ SWC /EBS-5209)2, 3 Basic Local Area			UEP9D	UEPYQ	1.17						11.90				
	2-Wire Voice Grade Port (Centrex/differ SWC /EBS-M5112)2, 3 Basic Local Area			UEP9D	UEPYR	1.17						11.90				
	2-Wire Voice Grade Port (Centrex/differ SWC /EBS-M5312)2, 3 Basic Local Area			UEP9D	UEPYS	1.17						11.90				
	2-Wire Voice Grade Port (Centrex/differ SWC /EBS-M5008)2, 3 Basic Local Area			UEP9D	UEPY4	1.17						11.90				
	2-Wire Voice Grade Port (Centrex/differ SWC /EBS-M5208)2, 3 Basic Local Area			UEP9D	UEPY5	1.17						11.90				
	2-Wire Voice Grade Port (Centrex/differ SWC /EBS-M5216)2, 3 Basic Local Area			UEP9D	UEPY6	1.17						11.90				
	2-Wire Voice Grade Port (Centrex/differ SWC /EBS-M5316)2, 3 Basic Local Area			UEP9D	UEPY7	1.17						11.90				
	2-Wire Voice Grade Port, Diff Serving Wire Center - 800 Service Term			UEP9D	UEPYZ	1.17						11.90				
	2-Wire Voice Grade Port terminated in on Megalink or equivalent Basic Local Area			UEP9D	UEPY9	1.17						11.90				
	2-Wire Voice Grade Port Terminated on 800 Service Term Basic Local Area			UEP9D	UEPY2	1.17						11.90				
FL & GA Only																
	2-Wire Voice Grade Port (Centrex)			UEP9D	UEPHA	1.17						11.90				
	2-Wire Voice Grade Port (Centrex 800 termination)			UEP9D	UEPHB	1.17						11.90				
	2-Wire Voice Grade Port (Centrex / EBS-PSET)3			UEP9D	UEPHC	1.17						11.90				
	2-Wire Voice Grade Port (Centrex / EBS-M5009)3			UEP9D	UEPHD	1.17						11.90				
	2-Wire Voice Grade Port (Centrex / EBS-M5209)3			UEP9D	UEPHE	1.17						11.90				
	2-Wire Voice Grade Port (Centrex / EBS-M5112)3			UEP9D	UEPHF	1.17						11.90				
	2-Wire Voice Grade Port (Centrex / EBS-M5312)3			UEP9D	UEPHG	1.17						11.90				
	2-Wire Voice Grade Port (Centrex / EBS-M5008)3			UEP9D	UEPHT	1.17						11.90				
	2-Wire Voice Grade Port (Centrex / EBS-M5208)3			UEP9D	UEPHU	1.17						11.90				
	2-Wire Voice Grade Port (Centrex / EBS-M5216)3			UEP9D	UEPHV	1.17						11.90				
	2-Wire Voice Grade Port (Centrex / EBS-M5316)3			UEP9D	UEPH3	1.17						11.90				
	2-Wire Voice Grade Port (Centrex with Caller ID)			UEP9D	UEPHH	1.17						11.90				
	2-Wire Voice Grade Port (Centrex/Caller ID/Msg Wtg Lamp Indication)3			UEP9D	UEPHW	1.17						11.90				
	2-Wire Voice Grade Port (Centrex/Msg Wtg Lamp Indication)3			UEP9D	UEPHJ	1.17						11.90				
	2-Wire Voice Grade Port (Centrex from diff Serving Wire Center) 2			UEP9D	UEPHM	1.17						11.90				
	2-Wire Voice Grade Port (Centrex/differ SWC /EBS-PSET)2, 3			UEP9D	UEPHO	1.17						11.90				
	2-Wire Voice Grade Port (Centrex/differ SWC /EBS-M5009)2, 3			UEP9D	UEPHP	1.17						11.90				
	2-Wire Voice Grade Port (Centrex/differ SWC /EBS-5209)2, 3			UEP9D	UEPHQ	1.17						11.90				
	2-Wire Voice Grade Port (Centrex/differ SWC /EBS-M5112)2, 3			UEP9D	UEPHR	1.17						11.90				
	2-Wire Voice Grade Port (Centrex/differ SWC /EBS-M5312)2, 3			UEP9D	UEPHS	1.17						11.90				
	2-Wire Voice Grade Port (Centrex/differ SWC /EBS-M5008)2, 3			UEP9D	UEPH4	1.17						11.90				
	2-Wire Voice Grade Port (Centrex/differ SWC /EBS-M5208)2, 3			UEP9D	UEPH5	1.17						11.90				
	2-Wire Voice Grade Port (Centrex/differ SWC /EBS-M5216)2, 3			UEP9D	UEPH6	1.17						11.90				

UNBUNDLED NETWORK ELEMENTS - Florida													Attachment: 2		Exhibit: B	
CATEGORY	RATE ELEMENTS	Interim	Zone	BCS	USOC	RATES($)					Svc Order Submitted Elec per LSR	Svc Order Submitted Manually per LSR	Incremental Charge - Manual Svc Order vs. Electronic-1st	Incremental Charge - Manual Svc Order vs. Electronic-Add'l	Incremental Charge - Manual Svc Order vs. Electronic-Disc 1st	Incremental Charge - Manual Svc Order vs. Electronic-Disc Add'l
						Rec	Nonrecurring		Nonrecurring Disconnect		OSS Rates($)					
							First	Add'l	First	Add'l	SOMEC	SOMAN	SOMAN	SOMAN	SOMAN	SOMAN
	2-Wire Voice Grade Port (Centrex/differ SWC /EBS-M5316)2, 3			UEP9D	UEPH7	1.17						11.90				
	2-Wire Voice Grade Port, Diff Serving Wire Center - 800 Service Term			UEP9D	UEPHZ	1.17						11.90				
	2-Wire Voice Grade Port terminated in on Megalink or equivalent			UEP9D	UEPH9	1.17						11.90				
	2-Wire Voice Grade Port Terminated on 800 Service Term			UEP9D	UEPH2	1.17						11.90				
Local Switching																
	Centrex Intercom Funtionality, per port			UEP9D	URECS	0.7384										
Local Number Portability																
	Local Number Portability (1 per port)			UEP9D	LNPCC	0.35										
Features																
	All Standard Features Offered, per port			UEP9D	UEPVF	2.26										
	All Select Features Offered, per port			UEP9D	UEPVS	0.00	370.70					11.90				
	All Centrex Control Features Offered, per port			UEP9D	UEPVC	2.26										
NARS																
	Unbundled Network Access Register - Combination			UEP9D	UARCX	0.00	0.00	0.00				11.90				
	Unbundled Network Access Register - Inward			UEP9D	UAR1X	0.00	0.00	0.00				11.90				
	Unbundled Network Access Register - Outdial			UEP9D	UAROX	0.00	0.00	0.00				11.90				
Miscellaneous Terminations																
2-Wire Trunk Side																
	Trunk Side Terminations, each			UEP9D	CEND6	8.81										
4-Wire Digital (1.544 Megabits)																
	DS1 Circuit Terminations, each			UEP9D	M1HD1	54.95										
	DS0 Channels Activiated per Channel			UEP9D	M1HDO	0.00	15.69					11.90				
Interoffice Channel Mileage - 2-Wire																
	Interoffice Channel Facilities Termination			UEP9D	MIGBC	25.32										
	Interoffice Channel mileage, per mile or fraction of mile			UEP9D	MIGBM	0.0091										
Feature Activations (DS0) Centrex Loops on Channelized DS1 Service																
D4 Channel Bank Feature Activations																
	Feature Activation on D-4 Channel Bank Centrex Loop Slot			UEP9D	1PQWS	0.66										
	Feature Activation on D-4 Channel Bank FX line Side Loop Slot			UEP9D	1PQW6	0.66										
	Feature Activation on D-4 Channel Bank FX Trunk Side Loop Slot			UEP9D	1PQW7	0.66										
	Feature Activation on D-4 Channel Bank Centrex Loop Slot - Different Wire Center			UEP9D	1PQWP	0.66										
	Feature Activation on D-4 Channel Bank Private Line Loop Slot			UEP9D	1PQWV	0.66										
	Feature Activation on D-4 Channel Bank Tjie Line/Trunk Loop Slot			UEP9D	1PQWQ	0.66										
	Feature Activation on D-4 Channel Bank WATS Loop Slot			UEP9D	1PQWA	0.66										
Non-Recurring Charges (NRC) Associated with UNE-P Centrex																
	NRC Conversion Currently Combined Switch-As-Is with allowed changes, per port			UEP9D	USAC2		21.50	8.42				11.90				
	Conversion of existing Centrex Common Block, each			UEP9D	USACN		5.17	8.32				11.90				
	New Centrex Standard Common Block			UEP9D	M1ACS	0.00	618.82					11.90				
	New Centrex Customized Common Block			UEP9D	M1ACC	0.00	618.82					11.90				
	NAR Establishment Charge, Per Occasion			UEP9D	URECA	0.00	66.48					11.90				
UNE-P CENTREX - EWSD (Valid in AL, FL, KY, LA, MS & TN)																
2-Wire VG Loop/2-Wire Voice Grade Port (Centrex) Combo																
UNE Port/Loop Combination Rates (Non-Design)																
	2-Wire VG Loop/2-Wire Voice Grade Port (Centrex) Port Combo - Non-Design		1	UEP9E		14.11										
	2-Wire VG Loop/2-Wire Voice Grade Port (Centrex)Port Combo - Non-Design		2	UEP9E		18.23										
	2-Wire VG Loop/2-Wire Voice Grade Port (Centrex)Port Combo - Non-Design		3	UEP9E		33.04										
UNE Port/Loop Combination Rates (Design)																

UNBUNDLED NETWORK ELEMENTS - Florida													Attachment: 2		Exhibit: B	
CATEGORY	RATE ELEMENTS	Interim	Zone	BCS	USOC	RATES($)					Svc Order Submitted Elec per LSR	Svc Order Submitted Manually per LSR	Incremental Charge - Manual Svc Order vs. Electronic-1st	Incremental Charge - Manual Svc Order vs. Electronic-Add'l	Incremental Charge - Manual Svc Order vs. Electronic-Disc 1st	Incremental Charge - Manual Svc Order vs. Electronic-Disc Add'l
						Rec	Nonrecurring		Nonrecurring Disconnect		OSS Rates($)					
							First	Add'l	First	Add'l	SOMEC	SOMAN	SOMAN	SOMAN	SOMAN	SOMAN
	2-Wire VG Loop/2-Wire Voice Grade Port (Centrex) Port Combo - Design		1	UEP9E		16.53										
	2-Wire VG Loop/2-Wire Voice Grade Port (Centrex)Port Combo - Design		2	UEP9E		21.60										
	2-Wire VG Loop/2-Wire Voice Grade Port (Centrex)Port Combo - Design		3	UEP9E		37.85										
UNE Loop Rate																
	2-Wire Voice Grade Loop (SL 1) - Zone 1		1	UEP9E	UECS1	12.94										
	2-Wire Voice Grade Loop (SL 1) - Zone 2		2	UEP9E	UECS1	17.06										
	2-Wire Voice Grade Loop (SL 1) - Zone 3		3	UEP9E	UECS1	31.87										
	2-Wire Voice Grade Loop (SL 2) - Zone 1		1	UEP9E	UECS2	15.36										
	2-Wire Voice Grade Loop (SL 2) - Zone 2		2	UEP9E	UECS2	20.43										
	2-Wire Voice Grade Loop (SL 2) - Zone 3		3	UEP9E	UECS2	36.68										
UNE Port Rate																
AL, FL, KY, LA, MS, & TN only																
	2-Wire Voice Grade Port (Centrex) Basic Local Area			UEP9E	UEPYA	1.17						11.90				
	2-Wire Voice Grade Port (Centrex 800 termination)Basic Local Area			UEP9E	UEPYB	1.17						11.90				
	2-Wire Voice Grade Port (Centrex with Caller ID)1Basic Local Area			UEP9E	UEPYH	1.17						11.90				
	2-Wire Voice Grade Port (Centrex from diff Serving Wire Center)2 Basic Local Area			UEP9E	UEPYM	1.17						11.90				
	2-Wire Voice Grade Port, Diff Serving Wire Center - 800 Service Term - Basic Local Area			UEP9E	UEPYZ	1.17						11.90				
	2-Wire Voice Grade Port terminated in on Megalink or equivalent - Basic Local Area			UEP9E	UEPY9	1.17						11.90				
	2-Wire Voice Grade Port Terminated on 800 Service Term - Basic Local Area			UEP9E	UEPY2	1.17						11.90				
Florida Only																
	2-Wire Voice Grade Port (Centrex)			UEP9E	UEPHA	1.17						11.90				
	2-Wire Voice Grade Port (Centrex 800 termination)			UEP9E	UEPHB	1.17						11.90				
	2-Wire Voice Grade Port (Centrex with Caller ID)1			UEP9E	UEPHH	1.17						11.90				
	2-Wire Voice Grade Port (Centrex from diff Serving Wire Center)2			UEP9E	UEPHM	1.17						11.90				
	2-Wire Voice Grade Port, Diff Serving Wire Center - 800 Service Term			UEP9E	UEPHZ	1.17						11.90				
	2-Wire Voice Grade Port terminated in on Megalink or equivalent			UEP9E	UEPH9	1.17						11.90				
	2-Wire Voice Grade Port Terminated on 800 Service Term			UEP9E	UEPH2	1.17						11.90				
Local Switching																
	Centrex Intercom Funtionality, per port			UEP9E	URECS	0.7384										
Local Number Portability																
	Local Number Portability (1 per port)			UEP9E	LNPCC	0.35										
Features																
	All Standard Features Offered, per port			UEP9E	UEPVF	2.26										
	All Select Features Offered, per port			UEP9E	UEPVS	0.00	370.70					11.90				
	All Centrex Control Features Offered, per port			UEP9E	UEPVC	2.26										
NARS																
	Unbundled Network Access Register - Combination			UEP9E	UARCX	0.00	0.00	0.00				11.90				
	Unbundled Network Access Register - Indial			UEP9E	UAR1X	0.00	0.00	0.00				11.90				
	Unbundled Network Access Register - Outdial			UEP9E	UAROX	0.00	0.00	0.00				11.90				
Miscellaneous Terminations																
2-Wire Trunk Side																
	Trunk Side Terminations, each			UEP9E	CEND6	8.81										
4-Wire Digital (1.544 Megabits)																
	DS1 Circuit Terminations, each			UEP9E	M1HD1	54.95										
	DS0 Channel Activated Per Channel			UEP9E	M1HDO	0.00	15.69					11.90				
Interoffice Channel Mileage - 2-Wire																
	Interoffice Channel Facilities Termination			UEP9E	MIGBC	25.32										

UNBUNDLED NETWORK ELEMENTS - Florida														Attachment: 2		Exhibit: B	
CATEGORY		RATE ELEMENTS	Interim	Zone	BCS	USOC	RATES($)					Svc Order Submitted Elec per LSR	Svc Order Submitted Manually per LSR	Incremental Charge - Manual Svc Order vs. Electronic-1st	Incremental Charge - Manual Svc Order vs. Electronic-Add'l	Incremental Charge - Manual Svc Order vs. Electronic-Disc 1st	Incremental Charge - Manual Svc Order vs. Electronic-Disc Add'l
							Rec	Nonrecurring		Nonrecurring Disconnect		OSS Rates($)					
								First	Add'l	First	Add'l	SOMEC	SOMAN	SOMAN	SOMAN	SOMAN	SOMAN
		Interoffice Channel mileage, per mile or fraction of mile			UEP9E	MIGBM	0.0091										
	Feature Activations (DS0) Centrex Loops on Channelized DS1 Service																
	D4 Channel Bank Feature Activations																
		Feature Activation on D-4 Channel Bank Centrex Loop Slot			UEP9E	1PQWS	0.66										
		Feature Activation on D-4 Channel Bank FX line Side Loop Slot			UEP9E	1PQW6	0.66										
		Feature Activation on D-4 Channel Bank FX Trunk Side Loop Slot			UEP9E	1PQW7	0.66										
		Feature Activation on D-4 Channel Bank Centrex Loop Slot - Different Wire Center			UEP9E	1PQWP	0.66										
		Feature Activation on D-4 Channel Bank Private Line Loop Slot			UEP9E	1PQWV	0.66										
		Feature Activation on D-4 Channel Bank Tjie Line/Trunk Loop Slot			UEP9E	1PQWQ	0.66										
		Feature Activation on D-4 Channel Bank WATS Loop Slot			UEP9E	1PQWA	0.66										
	Non-Recurring Charges (NRC) Associated with UNE-P Centrex																
		NRC Conversion Currently Combined Switch-As-Is with allowed changes, per port			UEP9E	USAC2		21.50	8.42				11.90				
		Conversion of Existing Centrex Common Block, each			UEP9E	USACN		5.17	8.32				11.90				
		New Centrex Standard Common Block			UEP9E	M1ACS	0.00	618.82					11.90				
		New Centrex Customized Common Block			UEP9E	M1ACC	0.00	618.82					11.90				
		NAR Establishment Charge, Per Occasion			UEP9E	URECA	0.00	66.48					11.90				
	Note 1 - Required Port for Centrex Control in 1AESS, 5ESS & EWSD																
	Note 2 - Requres Interoffice Channel Mileage																
	Note 3 - Requires Specific Customer Premises Equipment																
	NOTE: Rates displaying an "R" in Interim column are interim and subject to rate true-up as set forth in General Terms and Conditions.																

CATEGORY	RATE ELEMENTS	Interim	Zone	BCS	USOC	RATES($) Rec	Nonrecurring First	Nonrecurring Add'l	Nonrecurring Disconnect First	Nonrecurring Disconnect Add'l	Svc Order Submitted Elec per LSR	Svc Order Submitted Manually per LSR	Incremental Charge - Manual Svc Order vs. Electronic-1st	Incremental Charge - Manual Svc Order vs. Electronic-Add'l	Incremental Charge - Manual Svc Order vs. Electronic-Disc 1st	Incremental Charge - Manual Svc Order vs. Electronic-Disc Add'l
											OSS Rates($)					
											SOMEC	SOMAN	SOMAN	SOMAN	SOMAN	SOMAN
OPERATIONAL SUPPORT SYSTEMS																
NOTE: (1) Electronic Service Order: CLEC should contact its contract negotiator if it prefers the state specific electronic service ordering charges as ordered by the State Commissions. The electronic service ordering charge currently contained in this rate exhibit is the BellSouth regional electronic service ordering charge. CLEC may elect either the state specific Commission ordered rates for the electronic service ordering charges, or CLEC may elect the regional electronic service ordering charge.																
NOTE: (2) Any element that can be ordered electronically will be billed according to the SOMEC rate listed in this category. Please refer to BellSouth's Business Rules for Local Ordering (BBR-LO) to determine if a product can be ordered electronically. For those elements that cannot be ordered electronically at present per the BBR-LO, the listed SOMEC rate in this category reflects the charge that would be billed to a CLEC once electronic ordering capabilities come on-line for that element. Otherwise, the manual ordering charge, SOMAN, will be applied to a CLECs bill when it submits an LSR to BellSouth.																
	Electronic OSS Charge, per LSR, submitted via BST's OSS interactive interfaces (Regional)				SOMEC		3.50									
UNBUNDLED EXCHANGE ACCESS LOOP																
	2-WIRE ANALOG VOICE GRADE LOOP															
	2-Wire Analog Voice Grade Loop - Service Level 1- Zone 1		1	UEANL	UEAL2	14.21	42.54	31.33					18.94	8.42		
	2-Wire Analog Voice Grade Loop - Service Level 1- Zone 2		2	UEANL	UEAL2	16.41	42.54	31.33					18.94	8.42		
	2-Wire Analog Voice Grade Loop - Service Level 1- Zone 3		3	UEANL	UEAL2	26.08	42.54	31.33					18.94	8.42		
	2-Wire Analog Voice Grade Loop - Service Level 1- Zone 4		4	UEANL	UEAL2											
	Loop Testing - Basic 1st Half Hour			UEANL	URET1		78.92	78.92					18.94	8.42		
	Loop Testing - Basic Additional Half Hour			UEANL	URETA		23.33	23.33					18.94	8.42		
	CLEC to CLEC Conversion Charge Without Outside Dispatch (UVL-SL1)			UEANL	UREWO		15.75	8.92					18.94	8.42		
	Engineering Information Document (EI)			UEANL			28.72	28.72								
	Manual Order Coordination for UVL-SL1s (per loop)			UEANL	UEAMC		16.11	16.11								
	Order Coordination for Specified Conversion Time for UVL-SL1 (per LSR)			UEANL	OCOSL		35.74	35.74								
	2-WIRE Unbundled COPPER LOOP															
	2-Wire Unbundled Copper Loop - Non-Designed Zone 1	I	1	UEQ	UEQ2X	11.02	44.69	22.40	25.65	7.06			18.94	8.42		
	2 Wire Unbundled Copper Loop - Non-Designed - Zone 2	I	2	UEQ	UEQ2X	12.72	44.69	22.40	25.65	7.06			18.94	8.42		
	2 Wire Unbundled Copper Loop - Non-Designed - Zone 3	I	3	UEQ	UEQ2X	20.22	44.69	22.40	25.65	7.06			18.94	8.42		
	Order Coordination 2 Wire Unbundled Copper Loop - Non-Designed (per loop)			UEQ	USBMC		16.11	16.11					18.94	8.42		
	Engineering Information Document			UEQ			28.72	28.72					18.94	8.42		
	Loop Testing - Basic 1st Half Hour			UEQ	URET1		78.92	78.92					18.94	8.42		
	Loop Testing - Basic Additional Half Hour			UEQ	URETA		23.33	23.33					18.94	8.42		
	CLEC to CLEC Conversion Charge Without Outside Dispatch (UCL-ND)			UEQ	UREWO		14.25	7.42					18.94	8.42		
UNBUNDLED EXCHANGE ACCESS LOOP																
	2-WIRE ANALOG VOICE GRADE LOOP															
	UNE Loop Rates for Line Splitting (In Ga. PSC ordered the line splitting loop USOCs match the lower port- loop combo rates UEPLX)															
	2-Wire Voice Grade Loop (SL1) for Line Splitting - Zone 1	I	1	UEPSR, UEPSB	UEALS,	10.80										
	2-Wire Voice Grade Loop (SL1) for Line Splitting - Zone 1	I	1	UEPSR, UEPSB	UEABS	10.83										
	2-Wire Voice Grade Loop (SL1) for Line Splitting - Zone 2	I	2	UEPSR, UEPSB	UEALS,	12.47										
	2-Wire Voice Grade Loop (SL1) for Line Splitting - Zone 2	I	2	UEPSR, UEPSB	UEABS	12.47										
	2-Wire Voice Grade Loop (SL1)for Line Splitting - Zone 3	I	3	UEPSR, UEPSB	UEALS	19.83										
	2-Wire Voice Grade Loop (SL1)for Line Splitting - Zone 3	I	3	UEPSR, UEPSB	UEABS	19.83										
UNBUNDLED EXCHANGE ACCESS LOOP																
	2-WIRE ANALOG VOICE GRADE LOOP															
	2-Wire Analog Voice Grade Loop - Service Level 2 w/Loop or Ground Start Signaling - Zone 1		1	UEA	UEAL2	16.84	104.17	78.10					18.94	8.42		
	2-Wire Analog Voice Grade Loop - Service Level 2 w/Loop or Ground Start Signaling - Zone 2		2	UEA	UEAL2	19.45	104.17	78.10					18.94	8.42		
	2-Wire Analog Voice Grade Loop - Service Level 2 w/Loop or Ground Start Signaling - Zone 3		3	UEA	UEAL2	30.92	104.17	78.10					18.94	8.42		
	Order Coordination for Specified Conversion Time (per LSR)			UEA	OCOSL		35.74									
	2-Wire Analog Voice Grade Loop - Service Level 2 w/Reverse Battery Signaling - Zone 1		1	UEA	UEAR2	16.84	104.17	78.10					18.94	8.42		
	2-Wire Analog Voice Grade Loop - Service Level 2 w/Reverse Battery Signaling - Zone 2		2	UEA	UEAR2	19.45	104.17	78.10					18.94	8.42		
	2-Wire Analog Voice Grade Loop - Service Level 2 w/Reverse Battery Signaling - Zone 3		3	UEA	UEAR2	30.92	104.17	78.10					18.94	8.42		
	Order Coordination for Specified Conversion Time (per LSR)			UEA	OCOSL		35.74									

CATEGORY	RATE ELEMENTS	Interim	Zone	BCS	USOC	RATES($) Rec	Nonrecurring First	Nonrecurring Add'l	Nonrecurring Disconnect First	Nonrecurring Disconnect Add'l	Svc Order Submitted Elec per LSR	Svc Order Submitted Manually per LSR	Incremental Charge - Manual Svc Order vs. Electronic-1st	Incremental Charge - Manual Svc Order vs. Electronic-Add'l	Incremental Charge - Manual Svc Order vs. Electronic-Disc 1st	Incremental Charge - Manual Svc Order vs. Electronic-Disc Add'l
											OSS Rates($)					
											SOMEC	SOMAN	SOMAN	SOMAN	SOMAN	SOMAN
	CLEC to CLEC Conversion Charge without outside dispatch			UEA	UREWO		87.72	36.36					18.94	8.42		
	4-WIRE ANALOG VOICE GRADE LOOP															
	4-Wire Analog Voice Grade Loop - Zone 1		1	UEA	UEAL4	22.26	206.95	170.57					18.94	8.42		
	4-Wire Analog Voice Grade Loop - Zone 2		2	UEA	UEAL4	25.70	206.95	170.57					18.94	8.42		
	4-Wire Analog Voice Grade Loop - Zone 3		3	UEA	UEAL4	40.86	206.95	170.57					18.94	8.42		
	Order Coordination for Specified Conversion Time (per LSR)			UEA	OCOSL		35.74									
	CLEC to CLEC Conversion Charge without outside dispatch			UEA	UREWO		87.72	36.36					18.94	8.42		
	2-WIRE ISDN DIGITAL GRADE LOOP															
	2-Wire ISDN Digital Grade Loop - Zone 1		1	UDN	U1L2X	21.89	233.38	180.35					18.94	8.42		
	2-Wire ISDN Digital Grade Loop - Zone 2		2	UDN	U1L2X	25.27	233.38	180.35					18.94	8.42		
	2-Wire ISDN Digital Grade Loop - Zone 3		3	UDN	U1L2X	40.17	233.38	180.35					18.94	8.42		
	Order Coordination For Specified Conversion Time (per LSR)			UDN	OCOSL		35.74									
	CLEC to CLEC Conversion Charge without outside dispatch			UDN	UREWO		120.98	33.04					18.94	8.42		
	2-WIRE Universal Digital Channel (UDC) COMPATIBLE LOOP															
	2-Wire Universal Digital Channel (UDC) Compatible Loop - Zone 1	I	1	UDC	UDC2X	21.89	44.69	31.55	25.65	7.06			18.94	8.42		
	2-Wire Universal Digital Channel (UDC) Compatible Loop - Zone 2	I	2	UDC	UDC2X	25.27	44.69	31.55	25.65	7.06			18.94	8.42		
	2-Wire Universal Digital Channel (UDC) Compatible Loop - Zone 3	I	3	UDC	UDC2X	40.17	44.69	31.55	25.65	7.06			18.94	8.42		
	CLEC to CLEC Conversion Charge without outside dispatch	I		UDC	UREWO		44.69	31.55					18.94	8.42		
	2-WIRE ASYMMETRICAL DIGITAL SUBSCRIBER LINE (ADSL) COMPATIBLE LOOP															
	2 Wire Unbundled ADSL Loop including manual service inquiry & facility reservation - Zone 1	I	1	UAL	UAL2X	11.23	44.69	31.55	25.65	7.06			18.94	8.42		
	2 Wire Unbundled ADSL Loop including manual service inquiry & facility reservation - Zone 2	I	2	UAL	UAL2X	12.97	44.69	31.55	25.65	7.06			18.94	8.42		
	2 Wire Unbundled ADSL Loop including manual service inquiry & facility reservation - Zone 3	I	3	UAL	UAL2X	20.62	44.69	31.55	25.65	7.06			18.94	8.42		
	Order Coordination for Specified Conversion Time (per LSR)			UAL	OCOSL		35.74									
	2 Wire Unbundled ADSL Loop without manual service inquiry & facility reservaton - Zone 1	I	1	UAL	UAL2W	11.23	44.69	31.55	25.65	7.06			18.94	8.42		
	2 Wire Unbundled ADSL Loop without manual service inquiry & facility reservaton - Zone 2	I	2	UAL	UAL2W	12.97	44.69	31.55	25.65	7.06			18.94	8.42		
	2 Wire Unbundled ADSL Loop without manual service inquiry & facility reservaton - Zone 3	I	3	UAL	UAL2W	20.62	44.69	31.55	25.65	7.06			18.94	8.42		
	Order Coordination for Specified Conversion Time (per LSR)			UAL	OCOSL		35.74									
	CLEC to CLEC Conversion Charge without outside dispatch	I		UAL	UREWO		44.69	29.29					18.94	8.42		
	2-WIRE HIGH BIT RATE DIGITAL SUBSCRIBER LINE (HDSL) COMPATIBLE LOOP															
	2 Wire Unbundled HDSL Loop including manual service inquiry & facility reservation - Zone 1	I	1	UHL	UHL2X	7.88	44.69	31.55	25.65	7.06			18.94	8.42		
	2 Wire Unbundled HDSL Loop including manual service inquiry & facility reservation - Zone 2	I	2	UHL	UHL2X	9.09	44.69	31.55	25.65	7.06			18.94	8.42		
	2 Wire Unbundled HDSL Loop including manual service inquiry & facility reservation - Zone 3	I	3	UHL	UHL2X	14.46	44.69	31.55	25.65	7.06			18.94	8.42		
	Order Coordination for Specified Conversion Time (per LSR)			UHL	OCOSL		35.74									
	2 Wire Unbundled HDSL Loop without manual service inquiry and facility reservation - Zone 1	I	1	UHL	UHL2W	7.88	44.69	31.55	25.65	7.06			18.94	8.42		
	2 Wire Unbundled HDSL Loop without manual service inquiry and facility reservation - Zone 2	I	2	UHL	UHL2W	9.09	44.69	31.55	25.65	7.06			18.94	8.42		
	2 Wire Unbundled HDSL Loop without manual service inquiry and facility reservation - Zone 3	I	3	UHL	UHL2W	14.46	44.69	31.55	25.65	7.06			18.94	8.42		
	Order Coordination for Specified Conversion Time (per LSR)			UHL	OCOSL		35.74									
	CLEC to CLEC Conversion Charge without outside dispatch	I		UHL	UREWO		44.69	31.55					18.94	8.42		
	4-WIRE HIGH BIT RATE DIGITAL SUBSCRIBER LINE (HDSL) COMPATIBLE LOOP															
	4 Wire Unbundled HDSL Loop including manual service inquiry and facility reservation - Zone 1	I	1	UHL	UHL4X	10.39	44.69	31.55	25.65	7.06			18.94	8.42		
	4-Wire Unbundled HDSL Loop including manual service inquiry and facility reservation - Zone 2	I	2	UHL	UHL4X	12.00	44.69	31.55	25.65	7.06			18.94	8.42		

CATEGORY	RATE ELEMENTS	Interim	Zone	BCS	USOC	RATES($) Rec	Nonrecurring First	Nonrecurring Add'l	Nonrecurring Disconnect First	Nonrecurring Disconnect Add'l	Svc Order Submitted Elec per LSR	Svc Order Submitted Manually per LSR	Incremental Charge - Manual Svc Order vs. Electronic-1st	Incremental Charge - Manual Svc Order vs. Electronic-Add'l	Incremental Charge - Manual Svc Order vs. Electronic-Disc 1st	Incremental Charge - Manual Svc Order vs. Electronic-Disc Add'l
											OSS Rates($)					
											SOMEC	SOMAN	SOMAN	SOMAN	SOMAN	SOMAN
	4-Wire Unbundled HDSL Loop including manual service inquiry and facility reservation - Zone 3	I	3	UHL	UHL4X	19.07	44.69	31.55	25.65	7.06			18.94	8.42		
	Order Coordination for Specified Conversion Time (per LSR)			UHL	OCOSL		35.74									
	4-Wire Unbundled HDSL Loop without manual service inquiry and facility reservation - Zone 1	I	1	UHL	UHL4W	10.39	44.69	31.55	25.65	7.06			18.94	8.42		
	4-Wire Unbundled HDSL Loop without manual service inquiry and facility reservation - Zone 2	I	2	UHL	UHL4W	12.00	44.69	31.55	25.65	7.06			18.94	8.42		
	4-Wire Unbundled HDSL Loop without manual service inquiry and facility reservation - Zone 3	I	3	UHL	UHL4W	19.07	44.69	31.55	25.65	7.06			18.94	8.42		
	Order Coordination for Specified Conversion Time (per LSR)			UHL	OCOSL		35.74									
	CLEC to CLEC Conversion Charge without outside dispatch	I		UHL	UREWO		44.69	31.55					18.94	8.42		
4-WIRE DS1 DIGITAL LOOP																
	4-Wire DS1 Digital Loop - Zone 1		1	USL	USLXX	55.53	429.98	268.18					18.94	8.42		
	4-Wire DS1 Digital Loop - Zone 2		2	USL	USLXX	64.13	429.98	268.18					18.94	8.42		
	4-Wire DS1 Digital Loop - Zone 3		3	USL	USLXX	101.93	429.98	268.18					18.94	8.42		
	Order Coordination for Specified Conversion Time (per LSR)			USL	OCOSL		35.74									
	CLEC to CLEC Conversion Charge without outside dispatch			USL	UREWO		100.91	42.97					18.94	8.42		
4-WIRE 19.2, 56 OR 64 KBPS DIGITAL GRADE LOOP																
	4 Wire Unbundled Digital 19.2 Kbps		1	UDL	UDL19	25.75	348.55	241.20					18.94	8.42		
	4 Wire Unbundled Digital 19.2 Kbps		2	UDL	UDL19	29.74	348.55	241.20					18.94	8.42		
	4 Wire Unbundled Digital 19.2 Kbps		3	UDL	UDL19	47.27	348.55	241.20					18.94	8.42		
	4 Wire Unbundled Digital Loop 56 Kbps - Zone 1		1	UDL	UDL56	25.75	348.55	241.20					18.94	8.42		
	4 Wire Unbundled Digital Loop 56 Kbps - Zone 2		2	UDL	UDL56	29.74	348.55	241.20					18.94	8.42		
	4 Wire Unbundled Digital Loop 56 Kbps - Zone 3		3	UDL	UDL56	47.27	348.55	241.20					18.94	8.42		
	Order Coordination for Specified Conversion Time (per LSR)			UDL	OCOSL		35.74									
	4 Wire Unbundled Digital Loop 64 Kbps - Zone 1		1	UDL	UDL64	25.75	348.55	241.20					18.94	8.42		
	4 Wire Unbundled Digital Loop 64 Kbps - Zone 2		2	UDL	UDL64	29.74	348.55	241.20					18.94	8.42		
	4 Wire Unbundled Digital Loop 64 Kbps - Zone 3		3	UDL	UDL64	47.27	348.55	241.20					18.94	8.42		
	Order Coordination for Specified Conversion Time (per LSR)			UDL	OCOSL		35.74									
	CLEC to CLEC Conversion Charge without outside dispatc h			UDL	UREWO		101.95	49.66					18.94	8.42		
2-WIRE Unbundled COPPER LOOP																
	2-Wire Unbundled Copper Loop/Short including manual service inquiry & facility reservation - Zone 1	I	1	UCL	UCLPB	12.02	44.69	31.55	25.65	7.06			18.94	8.42		
	2-Wire Unbundled Copper Loop/Short including manual service inquiry & facility reservation - Zone 2	I	2	UCL	UCLPB	13.88	44.69	31.55	25.65	7.06			18.94	8.42		
	2 Wire Unbundled Copper Loop/Short including manual service inquiry & facility reservation - Zone 3	I	3	UCL	UCLPB	22.07	44.69	31.55	25.65	7.06			18.94	8.42		
	Order Coordination for Unbundled Copper Loops (per loop)			UCL	UCLMC		16.11	16.11								
	2-Wire Unbundled Copper Loop/Short without manual service inquiry and facility reservation - Zone 1	I	1	UCL	UCLPW	12.02	44.69	31.55	25.65	7.06			18.94	8.42		
	2-Wire Unbundled Copper Loop/Short without manual service inquiry and facility reservation - Zone 2	I	2	UCL	UCLPW	13.88	44.69	31.55	25.65	7.06			18.94	8.42		
	2-Wire Unbundled Copper Loop/Short without manual service inquiry and facility reservation - Zone 3	I	3	UCL	UCLPW	22.07	44.69	31.55	25.65	7.06			18.94	8.42		
	Order Coordination for Unbundled Copper Loops (per loop)			UCL	UCLMC		16.11	16.11								
	2-Wire Unbundled Copper Loop/Long - includes manual srvc. inquiry and facility reservation - Zone 1	I	1	UCL	UCL2L	35.56	44.69	31.55	25.65	7.06			18.94	8.42		
	2-Wire Unbundled Copper Loop/Long - includes manual svc. inquiry and facility reservation - Zone 2	I	2	UCL	UCL2L	41.07	44.69	31.55	25.65	7.06			18.94	8.42		
	2-Wire Unbundled Copper Loop/Long - includes manual svc. inquiry and facility reservation - Zone 3	I	3	UCL	UCL2L	65.28	44.69	31.55	25.65	7.06			18.94	8.42		
	Order Coordination for Unbundled Copper Loops (per loop)			UCL	UCLMC		16.11	16.11								
	2-Wire Unbundled Copper Loop/Long - without manual service inquiry and facility reservation - Zone 1	I	1	UCL	UCL2W	35.56	44.69	31.55	25.65	7.06			18.94	8.42		
	2-Wire Unbundled Copper Loop/Long - without manual service inquiry and facility reservation - Zone 2	I	2	UCL	UCL2W	41.07	44.69	31.55	25.65	7.06			18.94	8.42		
	2-Wire Unbundled Copper Loop/Long - without manual service inquiry and facility reservation - Zone 3	I	3	UCL	UCL2W	65.28	44.69	31.55	25.65	7.06			18.94	8.42		
	Order Coordination for Unbundled Copper Loops (per loop)			UCL	UCLMC		16.11	16.11								

UNBUNDLED NETWORK ELEMENTS - Georgia														Attachment: 2		Exhibit: B	
CATEGORY		RATE ELEMENTS	Interim	Zone	BCS	USOC	RATES($)					Svc Order Submitted Elec per LSR	Svc Order Submitted Manually per LSR	Incremental Charge - Manual Svc Order vs. Electronic-1st	Incremental Charge - Manual Svc Order vs. Electronic-Add'l	Incremental Charge - Manual Svc Order vs. Electronic-Disc 1st	Incremental Charge - Manual Svc Order vs. Electronic-Disc Add'l
							Rec	Nonrecurring		Nonrecurring Disconnect		OSS Rates($)					
								First	Add'l	First	Add'l	SOMEC	SOMAN	SOMAN	SOMAN	SOMAN	SOMAN
		CLEC to CLEC Conversion Charge without outside dispatch (UCL-Des)	I		UCL	UREWO		44.69	31.55					18.94	8.42		
	4-WIRE COPPER LOOP																
		4-Wire Copper Loop/Short - including manual service inquiry and facility reservation - Zone 1	I	1	UCL	UCL4S	12.02	44.69	31.55	25.65	7.06			18.94	8.42		
		4-Wire Copper Loop/Short - including manual service inquiry and facility reservation - Zone 2	I	2	UCL	UCL4S	13.88	44.69	31.55	25.65	7.06			18.94	8.42		
		4-Wire Copper Loop/Short - including manual service inquiry and facility reservation - Zone 3	I	3	UCL	UCL4S	22.07	44.69	31.55	25.65	7.06			18.94	8.42		
		Order Coordination for Unbundled Copper Loops (per loop)			UCL	UCLMC		16.11	16.11								
		4-Wire Copper Loop/Short - without manual service inquiry and facility reservation - Zone 1	I	1	UCL	UCL4W	12.02	44.69	31.55	25.65	7.06			18.94	8.42		
		4-Wire Copper Loop/Short - without manual service inquiry and facility reservation - Zone 2	I	2	UCL	UCL4W	13.88	44.69	31.55	25.65	7.06			18.94	8.42		
		4-Wire Copper Loop/Short - without manual service inquiry and facility reservation - Zone 3	I	3	UCL	UCL4W	22.07	44.69	31.55	25.65	7.06			18.94	8.42		
		Order Coordination for Unbundled Copper Loops (per loop)			UCL	UCLMC		16.11	16.11								
		4-Wire Unbundled Copper Loop/Long - includes manual svc. inquiry and facility reservation - Zone 1	I	1	UCL	UCL4L	35.56	44.69	31.55	25.65	7.06			18.94	8.42		
		4-Wire Unbundled Copper Loop/Long - includes manual svc. inquiry and facility reservation - Zone 2	I	2	UCL	UCL4L	41.07	44.69	31.55	25.65	7.06			18.94	8.42		
		4-Wire Unbundled Copper Loop/Long - includes manual svc. inquiry and facility reservation - Zone 3	I	3	UCL	UCL4L	65.28	44.69	31.55	25.65	7.06			18.94	8.42		
		Order Coordination for Unbundled Copper Loops (per loop)			UCL	UCLMC		16.11	16.11								
		4-Wire Unbundled Copper Loop/Long - without manual svc. inquiry and facility reservation - Zone 1	I	1	UCL	UCL4O	35.56	44.69	31.55	25.65	7.06			18.94	8.42		
		4-Wire Unbundled Copper Loop/Long - without manual svc. inquiry and facility reservation - Zone 2	I	2	UCL	UCL4O	41.07	44.69	31.55	25.65	7.06			18.94	8.42		
		4-Wire Unbundled Copper Loop/Long - without manual svc. inquiry and facility reservation - Zone 3	I	3	UCL	UCL4O	65.28	44.69	31.55	25.65	7.06			18.94	8.42		
		Order Coordination for Unbundled Copper Loops (per loop)			UCL	UCLMC		16.11	16.11								
		CLEC to CLEC conversion Charge without outside dispatch	I		UCL	UREWO		44.69	31.55					18.94	8.42		
LOOP MODIFICATION																	
		Unbundled Loop Modification, Removal of Load Coils - 2 Wire pair less than or equal to 18k ft	I		UAL, UHL, UCL, UEQ, ULS, UEA, UEANL, UDL, UDC, UDN, UDL, USL	ULM2L		0.00	0.00					18.94	8.42		
		Unbundled Loop Modification, Removal of Load Coils - 2 wire greater than 18k ft	I		UCL, ULS	ULM2G		0.00	0.00					18.94	8.42		
		Unbundled Loop Modification Removal of Load Coils - 4 Wire less than or equal to 18K ft	I		UHL, UCL	ULM4L		0.00	0.00					18.94	8.42		
		Unbundled Loop Modification Removal of Load Coils - 4 Wire pair greater than 18k ft	I		UCL	ULM4G		0.00	0.00					18.94	8.42		
		Unbundled Loop Modification Removal of Bridged Tap Removal, per unbundled loop	I		UAL, UHL, UCL, UEQ, UEF, ULS, UEA, UEANL, UDL, UDC, UDN, UDL, USL	ULMBT		0.00	0.00					18.94	8.42		
SUB-LOOPS																	
	Sub-Loop Distribution																
		Sub-Loop - Per Cross Box Location - CLEC Feeder Facility Set-Up	I		UEANL	USBSA		421.08	421.08					18.94	8.42		
		Sub-Loop - Per Cross Box Location - Per 25 Pair Panel Set-Up	I		UEANL	USBSB		67.10	67.10					18.94	8.42		
		Sub-Loop - Per Building Equipment Room - CLEC Feeder Facility Set-Up	I		UEANL	USBSC		394.74	394.74					18.94	8.42		
		Sub-Loop - Per Building Equipment Room - Per 25 Pair Panel Set-Up	I		UEANL	USBSD		154.57	154.57					18.94	8.42		

UNBUNDLED NETWORK ELEMENTS - Georgia														Attachment: 2		Exhibit: B	
CATEGORY	RATE ELEMENTS	Interim	Zone	BCS	USOC	RATES($)					Svc Order Submitted Elec per LSR	Svc Order Submitted Manually per LSR	Incremental Charge - Manual Svc Order vs. Electronic-1st	Incremental Charge - Manual Svc Order vs. Electronic-Add'l	Incremental Charge - Manual Svc Order vs. Electronic-Disc 1st	Incremental Charge - Manual Svc Order vs. Electronic-Disc Add'l
						Rec	Nonrecurring		Nonrecurring Disconnect		OSS Rates($)					
							First	Add'l	First	Add'l	SOMEC	SOMAN	SOMAN	SOMAN	SOMAN	SOMAN
	Unbundled Sub-Loops, Riser Cable, 2-Wire per Loop, Working and Spare Loop Activation			UEANL	USBRC	1.37	2.48	2.48	1.74	1.74			18.94	8.42		
	Unbundled Sub-Loops, Riser Cable, 4-Wire per Loop, Working and Spare Loop Activation			UEANL	USBRD	2.74	4.96	4.96	1.74	1.74			18.94	8.42		
	Sub-Loop Distribution Per 2-Wire Analog Voice Grade Loop - Statewide		sw	UEANL	USBN2	9.12	207.01	171.32					18.94	8.42		
	Order Coordination for Unbundled Sub-Loops, per sub-loop pair			UEANL	USBMC		34.22	34.22								
	Sub-Loop Distribution Per 4-Wire Analog Voice Grade Loop - Statewide		sw	UEANL	USBN4	8.32	219.35	72.99	123.72	28.77			18.94	8.42		
	Order Coordination for Unbundled Sub-Loops, per sub-loop pair			UEANL	USBMC		34.22	34.22								
	Sub-Loop 2-Wire Intrabuilding Network Cable (INC)	I		UEANL	USBR2	1.37	2.48	41.59	115.85	19.17			18.94	8.42		
	Sub-Loop 2-Wire Intrabuilding Network Cable (INC) - Intermediary Access Terminal (IAT)			UEANL	USBRC	1.37	2.48	2.48	1.74	1.74			18.94	8.42		
	Order Coordination for Unbundled Sub-Loops, per sub-loop pair			UEANL	USBMC		34.22	34.22								
	Sub-Loop 4-Wire Intrabuilding Network Cable (INC) - Intermediary Access Terminal (IAT)			UEANL	USBRD	2.74	4.96	4.96	1.74	1.74			18.94	8.42		
	Sub-Loop 4-Wire Intrabuilding Network Cable (INC)	I		UEANL	USBR4	2.96	176.46	55.11	122.17	19.57			18.94	8.42		
	Order Coordination for Unbundled Sub-Loops, per sub-loop pair			UEANL	USBMC		34.22	34.22								
	2 Wire Copper Unbundled Sub-Loop Distribution - Zone 1	I	1	UEF	UCS2X	5.54	175.16	55.50	108.86	24.53			18.84	8.42		
	2 Wire Copper Unbundled Sub-Loop Distribution - Zone 2	I	2	UEF	UCS2X	5.54	175.16	55.50	108.86	24.53			18.94	8.42		
	2 Wire Copper Unbundled Sub-Loop Distribution - Zone 3	I	3	UEF	UCS2X	5.54	175.16	55.50	108.86	24.53			18.94	8.42		
	Order Coordination for Unbundled Sub-Loops, per sub-loop pair			UEF	USBMC		34.22	34.22								
	4 Wire Copper Unbundled Sub-Loop Distribution - Zone 1	I	1	UEF	UCS4X	6.89	219.35	72.99	123.72	28.77			18.94	8.42		
	4 Wire Copper Unbundled Sub-Loop Distribution - Zone 2	I	2	UEF	UCS4X	6.89	219.35	72.99	123.72	28.77			18.94	8.42		
	4 Wire Copper Unbundled Sub-Loop Distribution - Zone 3	I	3	UEF	UCS4X	6.89	219.35	72.99	123.72	28.77			18.94	8.42		
	Order Coordination for Unbundled Sub-Loops, per sub-loop pair			UEF	USBMC		34.22	34.22								
Unbundled Network Terminating Wire (UNTW)																
	Unbundled Network Terminating Wire (UNTW) per Pair			UENTW	UENPP	1.37	2.48	2.48	1.74	1.74			18.94	8.42		
Network Interface Device (NID)																
	Network Interface Device (NID) - 1-2 lines	I		UENTW	UND12		86.37	56.69					18.94	8.42		
	Network Interface Device (NID) - 1-6 lines	I		UENTW	UND16		127.93	98.21					18.94	8.42		
	Network Interface Device Cross Connect - 2 W	I		UENTW	UNDC2		6.15	6.15					18.94	8.42		
	Network Interface Device Cross Connect - 4W			UENTW	UNDC4		6.15	6.15								
SUB-LOOPS																
Sub-Loop Feeder																
	USL-Feeder, DS0 Set-up per Cross Box location - CLEC Distribution Facility set-up			UEA, UDN,UCL,UDL,UDC	USBFW		421.08						18.94	8.42		
	USL Feeder - DS0 Set-up per Cross Box location - per 25 pair set-up			UEA, UDN,UCL,UDL,UDC	USBFX		67.10	67.10					18.94	8.42		
	USL Feeder DS1 Set-up at DSX location, per DS1 termination			USL	USBFZ		521.57	11.30					18.94	8.42		
	Unbundled Sub-Loop Feeder Loop, 2 Wire Ground-Start, Voice Grade- Statewide		sw	UEA	USBFA	8.58	206.44	170.05					18.94	8.42		
	Order Coordination for Specified Conversion Time, per LSR			UEA	OCOSL		35.74									
	Unbundled Sub-Loop Feeder Loop, 2 Wire Loop-Start, Voice Grade - Statewide		sw	UEA	USBFB	8.58	206.44	170.05					18.94	8.42		
	Order Coordination for Specified Time Conversion, per LSR			UEA	OCOSL		35.74									
	Unbundled Sub-Loop Feeder Loop, 2 Wire Reverse Battery, Voice Grade Loop - Statewide		sw	UEA	USBFC	8.58	206.44	170.05					18.94	8.42		
	Order Coordination For Specified Conversion Time, per LSR			UEA	OCOSL		35.74									
	Unbundled Sub-Loop Feeder Loop, 4 Wire Ground-Start, Voice Grade - Statewide		sw	UEA	USBFD	19.91	243.41	81.32	134.77	33.93			18.94	8.42		
	Order Coordination For Specified Conversion Time, Per LSR			UEA	OCOSL		35.74									

CATEGORY		RATE ELEMENTS	Interim	Zone	BCS	USOC	RATES($)					Svc Order Submitted Elec per LSR	Svc Order Submitted Manually per LSR	Incremental Charge - Manual Svc Order vs. Electronic-1st	Incremental Charge - Manual Svc Order vs. Electronic-Add'l	Incremental Charge - Manual Svc Order vs. Electronic-Disc 1st	Incremental Charge - Manual Svc Order vs. Electronic-Disc Add'l
							Rec	Nonrecurring		Nonrecurring Disconnect		OSS Rates($)					
								First	Add'l	First	Add'l	SOMEC	SOMAN	SOMAN	SOMAN	SOMAN	SOMAN
		Unbundled Sub-Loop Feeder Loop, 4 Wire Loop-Start, Voice Grade - Statewide		sw	UEA	USBFE	19.91	243.41	81.32	134.77	33.93			18.94	8.42		
		Order Coordination For Specified Conversion Time, Per LSR			UEA	OCOSL		35.74									
		Unbundled Sub-Loop Feeder Loop, 2-Wire ISDN BRI - Statewide		sw	UDN	USBFF	17.73	208.50	62.31	119.68	29.58			18.94	8.42		
		Order Coordination For Specified Conversion Time, Per LSR			UDN	OCOSL		35.74									
		Unbundled Sub-Loop Feeder, 2 Wire UDC (IDSL compatible)		sw	UDC	USBFS	17.73	208.50	62.31	119.68	29.58			19.99	19.99	19.99	19.99
		Unbundled Sub-Loop Feeder Loop, 4-Wire DS1 - Statewide		sw	USL	USBFG	79.30	203.69	128.76	124.09	34.80			19.99	19.99	19.99	19.99
		Order Coordination For Specified Conversion Time, Per LSR			USL	OCOSL		35.74									
		Unbundled Sub-Loop Feeder Loop, 2-Wire Copper Loop - Statewide		sw	UCL	USBFH	7.22	195.38	63.15	119.68	29.58			18.94	8.42		
		Order Coordination For Specified Conversion Time, per LSR			UCL	OCOSL		35.74									
		Sub-Loop Feeder - Per 4-Wire Copper Loop - Statewide		sw	UCL	USBFJ	13.72	243.41	81.32	134.77	33.93			18.94	8.42		
		Order Coordination For Specified Conversion Time, per LSR			UCL	OCOSL		35.74									
		Sub-Loop Feeder - Per 4-Wire 19.2 Kbps Digital Grade Loop		sw	UDL	USBFN	24.50	243.41	81.32	134.77	33.93			19.99	19.99	19.99	19.99
		Sub-Loop Feeder - Per 4-Wire 56 Kbps Digital Grade Loop - Statewide		sw	UDL	USBFO	24.50	243.41	81.32	134.77	33.93			19.99	19.99	19.99	19.99
		Order Coordination For Specified Time Conversion, per LSR			UDL	OCOSL		35.74									
		Sub-Loop Feeder - Per 4-Wire 64 Kbps Digital Grade Loop - Statewide		sw	UDL	USBFP	24.50	243.41	81.32	134.77	33.93			19.99	19.99	19.99	19.99
		Order Coordination For Specified Conversion Time, per LSR			UDL	OCOSL		35.74									
SUB-LOOPS																	
	Sub-Loop Feeder																
		Sub Loop Feeder - DS3 - Per Mile Per Month		I	UE3	1L5SL	12.80										
		Sub Loop Feeder - DS3 - Facility Termination Per Month		I	UE3	USBF1	329.94	3,380.00	406.50	163.61	92.75			18.94	8.42		
		Sub Loop Feeder – STS-1 – Per Mile Per Month		I	UDLSX	1L5SL	12.80										
		Sub Loop Feeder - STS-1 - Facility Termination Per Month		I	UDLSX	USBF7	372.78	3,380.00	406.50	163.61	92.75			18.94	8.42		
		Sub Loop Feeder – OC-3 – Per Mile Per Month		I	UDLO3	1L5SL	9.71										
		Sub Loop Feeder - OC-3 - Facility Termination Protection Per Month		I	UDLO3	USBF5	57.79										
		Sub Loop Feeder - OC-3 - Facility Termination Per Month		I	UDLO3	USBF2	524.13	3,380.00	406.50	163.61	92.75			18.94	8.42		
		Sub Loop Feeder - OC-12 - Per Mile Per Month		I	UDL12	1L5SL	11.95										
		Sub Loop Feeder - OC-12 - Facility Termination Protection Per Month		I	UDL12	USBF6	519.09										
		Sub Loop Feeder - OC-12 - Facility Termination Per Month		I	UDL12	USBF3	1,570.00	3,380.00	406.50	163.61	92.75			18.94	8.42		
		Sub Loop Feeder - OC-48 - Per Mile Per Month		I	UDL48	1L5SL	39.20										
		Sub Loop Feeder - OC-48 - Facility Termination Protection Per Month		I	UDL48	USBF9	259.99										
		Sub Loop Feeder - OC-48 - Facility Termination Per Month		I	UDL48	USBF4	1,505.00	3,566.00	406.50	163.61	92.75			18.94	8.42		
		Sub Loop Feeder - OC-12 Interface On OC-48		I	UDL48	USBF8	323.43	787.13	406.50	163.61	92.75			18.94	8.42		
UNBUNDLED LOOP CONCENTRATION																	
		Unbundled Loop Concentration - System A (TR008)			ULC	UCT8A	441.42	650.81	650.81					19.99	19.99	19.99	19.99
		Unbundled Loop Concentration - System B (TR008)			ULC	UCT8B	52.97	271.17	271.17					19.99	19.99	19.99	19.99
		Unbundled Loop Concentration - System A (TR303)			ULC	UCT3A	478.93	650.81	650.81					19.99	19.99	19.99	19.99
		Unbundled Loop Concentration - System B (TR303)			ULC	UCT3B	89.26	271.17	271.17					19.99	19.99	19.99	19.99
		Unbundled Loop Concentration - DS1 Loop Interface Card			ULC	UCTCO	5.04	126.57	92.14	33.57	9.40			19.99	19.99	19.99	19.99
		Unbundled Loop Concentration - ISDN Loop Interface (Brite Card)			UDN	ULCC1	8.00	21.07	20.96	10.78	10.71			19.99	19.99	19.99	19.99
		Unbundled Loop Concentration - UDC Loop Interface (Brite Card)			UDC	ULCCU	8.00	21.07	20.96	10.78	10.71			19.99	19.99	19.99	19.99
		Unbundled Loop Concentration - -2 Wire Voice-Loop Start or Ground Start Loop Interface (POTS Card)			UEA	ULCC2	2.00	21.07	20.96	10.78	10.71			19.99	19.99	19.99	19.99
		Unbundled Loop Concentration - 2 Wire Voice - Reverse Battery Loop Interface (SPOTS Card)			UEA	ULCCR	11.89	21.07	20.96	10.78	10.71			19.99	19.99	19.99	19.99
		Unbundled Loop Concentration - 4 Wire Voice Loop Interface (Specials Card)			UEA	ULCC4	7.09	21.07	20.96	10.78	10.71			19.99	19.99	19.99	19.99
		Unbundled Loop Concentration - TEST CIRCUIT Card			ULC	UCTTC	34.67	21.07	20.96	10.78	10.71			19.99	19.99	19.99	19.99
		Unbundled Loop Concentration - Digital 19.2 Kbps Data Loop Interface			UDL	ULCC7	10.51	21.07	20.96	10.78	10.71			19.99	19.99	19.99	19.99

CATEGORY	RATE ELEMENTS	Interim	Zone	BCS	USOC	RATES($) Rec	Nonrecurring First	Nonrecurring Add'l	Nonrecurring Disconnect First	Nonrecurring Disconnect Add'l	Svc Order Submitted Elec per LSR	Svc Order Submitted Manually per LSR	Incremental Charge - Manual Svc Order vs. Electronic-1st	Incremental Charge - Manual Svc Order vs. Electronic-Add'l	Incremental Charge - Manual Svc Order vs. Electronic-Disc 1st	Incremental Charge - Manual Svc Order vs. Electronic-Disc Add'l
											OSS Rates($)					
											SOMEC	SOMAN	SOMAN	SOMAN	SOMAN	SOMAN
	Unbundled Loop Concentration - Digital 56 Kbps Data Loop Interface			UDL	ULCC5	10.51	21.07	20.96	10.78	10.71			19.99	19.99	19.99	19.99
	Unbundled Loop Concentration - Digital 64 Kbps Data Loop Interface			UDL	ULCC6	10.51	21.07	20.96	10.78	10.71			19.99	19.99	19.99	19.99
UNE OTHER, PROVISIONING ONLY - NO RATE																
	NID - Dispatch and Service Order for NID installation			UENTW	UNDBX											
	UNTW Circuit Id Establishment, Provisioning Only - No Rate			UENTW	UENCE											
	Unbundled Contract Name, Provisioning Only - No Rate			UEANL,UEF,UEQ,UENTW	UNECN											
UNE OTHER, PROVISIONING ONLY - NO RATE																
	Unbundled Contact Name, Provisioning Only - no rate			UAL,UCL,UDC,UDL,UDN,UEA,UHL,ULC	UNECN	0.00	0.00									
	Unbundled Sub-Loop Feeder-2 Wire Cross Box Jumper - no rate			UEA,UDN,UCL,UDC	USBFQ	0.00	0.00									
	Unbundled Sub-Loop Feeder-4 Wire Cross Box Jumper - no rate			UEA,USL,UCL,UDL	USBFR	0.00	0.00									
	Unbundled DS1 Loop - Superframe Format Option - no rate			USL	CCOSF	0.00	0.00									
	Unbundled DS1 Loop - Expanded Superframe Format option - no rate			USL	CCOEF	0.00	0.00									
HIGH CAPACITY UNBUNDLED LOCAL LOOP																
	High Capacity Unbundled Local Loop - DS3 - Per Mile per month			UE3	1L5ND	8.90										
	High Capacity Unbundled Local Loop - DS3 - Facility Termination per month			UE3	UE3PX	390.34	639.50	426.40					37.55	37.55	18.03	18.03
	High Capacity Unbundled Local Loop - STS-1 - Per Mile per month			UDLSX	1L5ND	8.90										
	High Capacity Unbundled Local Loop - STS-1 - Facility Termination per month			UDLSX	UDLS1	421.59	639.50	426.40					37.55	37.55	18.03	18.03
LOOP MAKE-UP																
	Loop Makeup - Preordering Without Reservation, per working or spare facility queried (Manual).			UMK	UMKLW		35.00	35.00								
	Loop Makeup - Preordering With Reservation, per spare facility queried (Manual).			UMK	UMKLP		45.00	45.00								
	Loop Makeup--With or Without Reservation, per working or spare facility queried (Mechanized)			UMK	PSUMK		0.075	0.075								
HIGH FREQUENCY SPECTRUM																
	SPLITTERS-CENTRAL OFFICE BASED															
	Line Sharing Splitter, per System 96 Line Capacity			ULS	ULSDA	131.00	0.00	0.00	0.00	0.00			18.94	8.42		
	Line Sharing Splitter, per System 24 Line Capacity			ULS	ULSDB	32.00	0.00	0.00	0.00	0.00			18.94	8.42		
	Line Sharing Splitter, Per System, 8 Line Capacity	I		ULS	ULSD8	11.00	0.00	0.00	0.00	0.00			18.94	8.42		
	Line Sharing-DLEC Owned Splitter in CO-CFA activaton-deactivation (per LSOD)			ULS	ULSDG		0.00	0.00	0.00	0.00			18.94	8.42		
	END USER ORDERING-CENTRAL OFFICE BASED-HIGH FREQUENCY SPECTRUM AKA LINE SHARING															
	Line Sharing - per Line Activation (BST Owned Splitter)			ULS	ULSDC	0.61	10.51	7.70	0.00	0.00			18.94	8.42		
	Line Sharing - per Subsequent Activity per Line Rearrangement(BST Owned Splitter			ULS	ULSDS		36.23	13.23	0.00	0.00			18.94	8.42		
	Line Sharing - per Subsequent Activity per Line Rearrangement(DLEC Owned Splitter			ULS	ULSCS		36.23	13.23	0.00	0.00			18.94	8.42		
	Line Sharing - per Line Activation (DLEC owned Splitter)	I		ULS	ULSCC	0.61	47.44	19.31	0.00	0.00			18.94	8.42		
	Line Splitting - per line activation DLEC owned splitter	I		UEPSR UEPSB	UREOS	0.61										
	Line Splitting - per line activation BST owned - physical	I		UEPSR UEPSB	UREBP	0.639	53.48	34.48	16.45	12.75			18.94	8.42		
	Line Splitting - per line activation BST owned - virtual	I		UEPSR UEPSB	UREBV	0.636	53.48	34.48	16.45	12.75			18.94	8.42		
UNBUNDLED DEDICATED TRANSPORT																
	NOTE: INTEROFFICE CHANNEL DEDICATED TRANSPORT - minimum billing period - below DS3=one month, DS3/STS-1=four months															
	INTEROFFICE CHANNEL - DEDICATED TRANSPORT															
	Interoffice Channel - Dedicated Transport - 2-Wire Voice Grade - Per Mile per month			U1TVX	1L5XX	0.0222										

UNBUNDLED NETWORK ELEMENTS - Georgia														Attachment: 2		Exhibit: B	
CATEGORY		RATE ELEMENTS	Interim	Zone	BCS	USOC	RATES($)					Svc Order Submitted Elec per LSR	Svc Order Submitted Manually per LSR	Incremental Charge - Manual Svc Order vs. Electronic-1st	Incremental Charge - Manual Svc Order vs. Electronic-Add'l	Incremental Charge - Manual Svc Order vs. Electronic-Disc 1st	Incremental Charge - Manual Svc Order vs. Electronic-Disc Add'l
							Rec	Nonrecurring		Nonrecurring Disconnect		OSS Rates($)					
								First	Add'l	First	Add'l	SOMEC	SOMAN	SOMAN	SOMAN	SOMAN	SOMAN
		Interoffice Channel - Dedicated Transport- 2- Wire Voice Grade - Facility Termination per month			U1TVX	U1TV2	17.07	79.61	36.08					18.94	18.94		
		Interoffice Channel - Dedicated Transpor t- 2-Wire Voice Grade Rev Bat. - Per Mile per month			U1TVX	1L5XX	0.0222										
		Interoffice Channel - Dedicated Transport- 2- Wire VG Rev Bat. - Facility Termination per month			U1TVX	U1TR2	17.07	79.61	36.08					18.94	18.94		
		Interoffice Channel - Dedicated Transport - 56 kbps - per mile per month			U1TDX	1L5XX	0.0222										
		Interoffice Channel - Dedicated Transport - 56 kbps - Facility Termination per month			U1TDX	U1TD5	16.45	79.61	36.08					18.94	18.94		
		Interoffice Channel - Dedicated Transport - 64 kbps - per mile per month			U1TDX	1L5XX	0.0222										
		Interoffice Channel - Dedicated Transport - 64 kbps - Facility Termination per month			U1TDX	U1TD6	16.45	79.61	36.08					18.94	18.94		
		Interoffice Channel - Dedicated Channel - DS1 - Per Mile per month			U1TD1	1L5XX	0.4523										
		Interoffice Channel - Dedicated Tranport - DS1 - Facility Termination per month			U1TD1	U1TF1	78.47	147.07	111.75					18.94	18.94		
		Interoffice Channel - Dedicated Transport - DS3 - Per Mile per month			U1TD3	1L5XX	2.72										
		Interoffice Channel - Dedicated Transport - DS3 - Facility Termination per month			U1TD3	U1TF3	788.00	511.10	330.77					37.55	37.55	18.03	18.03
		Interoffice Channel - Dedicated Transport - STS-1 - Per Mile per month			U1TS1	1L5XX	2.72										
		Interoffice Channel - Dedicated Transport - STS-1 - Facility Termination per month			U1TS1	U1TFS	783.63	511.10	449.91					61.19	61.19	3.17	3.17
	LOCAL CHANNEL - DEDICATED TRANSPORT																
	NOTE: LOCAL CHANNEL DEDICATED TRANSPORT - minimum billing period - below DS3=one month, DS3/STS-1=four months																
		Local Channel - Dedicated - 2-Wire Voice Grade Per Month			ULDVX	ULDV2	13.91	382.95	62.40					18.94	8.42		
		Local Channel - Dedicated - 2-Wire Voice Grade Rev Bat per month			ULDVX	ULDR2	13.91	382.95	62.40					18.94	18.94		
		Local Channel - Dedicated - 4-Wire Voice Grade per month			UNDVX	ULDV4	14.99	368.44	64.05					18.94	8.42		
		Local Channel - Dedicated - DS1 per month			ULDD1	ULDF1	38.36	356.15	312.89					44.22	44.22	18.03	18.03
		Local Channel - Dedicated - DS3 - Per Mile per month			ULDD3	1L5NC	6.92										
		Local Channel - Dedicated - DS3 - Facility Termination per month			ULDD3	ULDF3	515.91	639.50	426.31					37.55	37.55	18.03	18.03
		Local Channel - Dedicated - STS-1- Per Mile per month			ULDS1	1L5NC	6.92										
		Local Channel - Dedicated - STS-1 - Facility Termination per month			ULDS1	ULDFS	517.56	639.50	426.31					18.94	18.94		
MULTIPLEXERS																	
		Channelization - DS1 to DS0 Channel System			UXTD1	MQ1	126.22	198.22	123.59					14.75	6.55	10.70	
		OCU-DP COCI (data) - DS1 to DS0 Channel System - per month (2.4-64kbs)			UDL	1D1DD	1.86	12.02	8.66					14.75	6.55	10.60	
		2-wire ISDN COCI (BRITE) - DS1 to DS0 Channel Systsem - per month			UDN	UC1CA	3.37	12.02	8.66					14.75	6.55	10.60	
		Voice Grade COCI - DS1 to DS0 Channel System - per month			UEA	1D1VG	1.17	12.02	8.66					14.75	6.55	10.60	
		DS3 to DS1 Channel System per month			UXTD3	MQ3	182.04	265.91	188.78					14.75	6.55	10.60	
		STS1 to DS1 Channel System per month			UXTS1	MQ3	182.04	265.91	188.78					18.94	18.94		
		DS3 Interface Unit (DS1 COCI) used with Loop per month			USL	UC1D1	11.02	12.02	8.66					14.75	6.55	10.60	
		DS3 Interface Unit (DS1 COCI) used with Local Channel per month			ULDD1	UC1D1	11.02	12.02	8.66					14.75	6.55		
		DS3 Interface Unit (DS1 COCI) used with Interoffice Channel per month			U1TD1	UC1D1	11.02	12.02	8.66					14.75	6.55		
DARK FIBER																	
		Dark Fiber, Four Fiber Strands, Per Route Mile or Fraction Thereof per month - Local Channel			UDF	1L5DC	44.22										
		NRC Dark Fiber - Local Channel			UDF	UDFC4		1,355.29	273.69					18.94	18.94		
		Dark Fiber, Four Fiber Strands, Per Route Mile or Fraction Thereof per month - Interoffice Channel			UDF	1L5DF	44.22										

CATEGORY	RATE ELEMENTS	Interim	Zone	BCS	USOC	RATES($) Rec	Nonrecurring First	Nonrecurring Add'l	Nonrecurring Disconnect First	Nonrecurring Disconnect Add'l	Svc Order Submitted Elec per LSR	Svc Order Submitted Manually per LSR	Incremental Charge - Manual Svc Order vs. Electronic-1st	Incremental Charge - Manual Svc Order vs. Electronic-Add'l	Incremental Charge - Manual Svc Order vs. Electronic-Disc 1st	Incremental Charge - Manual Svc Order vs. Electronic-Disc Add'l
											OSS Rates($)					
											SOMEC	SOMAN	SOMAN	SOMAN	SOMAN	SOMAN
	NRC Dark Fiber - Interoffice Channel			UDF	UDF14		1,355.29	273.69					18.94	18.94		
	Dark Fiber, Four Fiber Strands, Per Route Mile or Fraction Thereof per month - Local Loop			UDF	1L5DL	44.22										
	NRC Dark Fiber - Local Loop			UDF	UDFL4		1,355.29	273.69					18.94	18.94		
TRANSPORT OTHER																
Optional Features & Functions:																
8XX ACCESS TEN DIGIT SCREENING																
	8XX Access Ten Digit Screening, Per Call			OHD		0.0004868										
	8XX Access Ten Digit Screening, Reservation Charge Per 8XX Number Reserved			OHD	N8R1X		6.57	0.76					18.94	18.94		
	8XX Access Ten Digit Screening, Per 8XX No. Established W/O POTS Translations			OHD			12.81	1.45					18.94	18.94		
	8XX Access Ten Digit Screening, Per 8XX No. Established With POTS Translations			OHD	N8FTX		12.81	1.45					18.94	18.94		
	8XX Access Ten Digit Screening, Customized Area of Service Per 8XX Number			OHD	N8FCX		4.46	2.23					18.94	18.94		
	8XX Access Ten Digit Screening, Multiple InterLATA CXR Routing Per CXR Requested Per 8XX No.			OHD	N8FMX		5.22	2.99					18.94	18.94		
	8XX Access Ten Digit Screening, Change Charge Per Request			OHD	N8FAX		7.33	0.76					18.94	18.94		
	8XX Access Ten Digit Screening, Call Handling and Destination Features			OHD	N8FDX		4.72	4.46					18.94	18.94		
LINE INFORMATION DATA BASE ACCESS (LIDB)																
	LIDB Common Transport Per Query			OQT		0.0000338										
	LIDB Validation Per Query			OQU		0.0105974										
	LIDB Originating Point Code Establishment or Change			OQT, OQU	NRPBX		50.30						18.94	18.94		
SIGNALING (CCS7)																
	CCS7 Signaling Termination, Per STP Port			UDB	PT8SX	133.99										
	CCS7 Signaling Usage, Per TCAP Message			UDB		0.000087										
	CCS7 Signaling Connection, Per link (A link)			UDB	TPP++	17.05	131.96	131.96					18.94	18.94		
	CCS7 Signaling Connection, Per link (B link) (also known as D link)			UDB	TPP++	17.05	131.96	131.96					18.94	18.94		
	CCS7 Signaling Usage, Per ISUP Message			UDB		0.0000354										
	CCS7 Signaling Usage Surrogate, per link per LATA			UDB	STU56	340.67										
	CCS7 Signaling Point Code, per Originating Point Code Establishment or Change, per STP affected			UDB	CCAPO		40.00	40.00					18.94	18.94		
	CCS7 Signaling Point Code, per Destination Point Code Establishment or Change, Per Stp Affected			UDB	CCAPD		8.00	8.00					18.94	18.94		
CALLING NAME (CNAM) SERVICE																
	CNAM for DB Owners, Per Query			OQV		0.01										
	CNAM for Non DB Owners, Per Query			OQV		0.01										
	CNAM (Non-Databs Owner), NRC, applies when using the Character Based User Interface (CHUI)			OQV	CDDCH		595.00	595.00					18.94	18.94		
OPERATOR CALL PROCESSING																
	Oper. Call Processing - Oper. Provided, Per Min. - Using BST LIDB					1.20										
	Oper. Call Processing - Oper. Provided, Per Min. - Using Foreign LIDB					1.24										
	Oper. Call Processing - Fully Automated, per Call - Using BST LIDB					0.20										
	Oper. Call Processing - Fully Automated, per Call - Using Foreign LIDB					0.20										
INWARD OPERATOR SERVICES																
	Inward Operator Svcs - Verification, Per Minute					1.15										
	Inward Operator Services - Verification and Emergency Interrupt - Per Minute					1.15										
BRANDING - OPERATOR CALL PROCESSING																
	Recording of Custom Branded OA Announcement				CBAOS		7,000.00	7,000.00					19.99	19.99	19.99	19.99
	Loading of Custom Branded OA Announcement per shelf/NAV				CBAOL		500.00	500.00					19.99	19.99		
Unbranding via OLNS for UNEP CLEC																

UNBUNDLED NETWORK ELEMENTS - Georgia														Attachment: 2		Exhibit: B	
CATEGORY		RATE ELEMENTS	Interim	Zone	BCS	USOC	RATES($)					Svc Order Submitted Elec per LSR	Svc Order Submitted Manually per LSR	Incremental Charge - Manual Svc Order vs. Electronic-1st	Incremental Charge - Manual Svc Order vs. Electronic-Add'l	Incremental Charge - Manual Svc Order vs. Electronic-Disc 1st	Incremental Charge - Manual Svc Order vs. Electronic-Disc Add'l
							Rec	Nonrecurring		Nonrecurring Disconnect		OSS Rates($)					
								First	Add'l	First	Add'l	SOMEC	SOMAN	SOMAN	SOMAN	SOMAN	SOMAN
		Loading of OA per OCN (Regional)						1,200.00	1,200.00								
DIRECTORY ASSISTANCE SERVICES																	
	DIRECTORY ASSISTANCE ACCESS SERVICE																
		Directory Assistance Access Service Calls, Charge Per Call					0.275										
	DIRECTORY ASSISTANCE CALL COMPLETION ACCESS SERVICE (DACC)																
		Directory Assistance Call Completion Access Service (DACC), Per Call Attempt					0.10										
	DIRECTORY TRANSPORT																
DIRECTORY ASSISTANCE SERVICES																	
	DIRECTORY ASSISTANCE DATA BASE SERVICE (DADS)																
		Directory Assistance Data Base Service Charge Per Listing					0.04										
		Directory Assistance Data Base Service, per month				DBSOF	150.00										
BRANDING - DIRECTORY ASSISTANCE																	
	Facility Based CLEC																
		Recording and Provisioning of DA Custom Branded Announcement			AMT	CBADA		6,000.00	6,000.00								
		Loading of Custom Branded Announcement per DRAM Card/Switch			AMT	CBADC		1,170.00	1,170.00								
	UNEP CLEC																
		Recording of DA Custom Branded Announcement						3,000.00	3,000.00								
		Loading of DA Custom Branded Announcement per DRAM Card/Switch per OCN						1,170.00	1,170.00								
	Unbranding via OLNS for UNEP CLEC																
		Loading of DA per OCN (1 OCN per Order)						420.00	420.00								
		Loading of DA per Switch per OCN						16.00	16.00								
SELECTIVE ROUTING																	
		Selective Routing Per Unique Line Class Code Per Request Per Switch				USRCR		180.62	180.62					33.67	7.88		
VIRTUAL COLLOCATION																	
		Virtual Collocation - Application Cost			AMTFS	EAF		2,848.30	2,848.30								
		Virtual Collocation - Cable Installation Cost, per cable			AMTFS	ESPCX		2,750.00	2,750.00								
		Virtual Collocation - Floor Space, per sq. ft.			AMTFS	ESPVX	3.20										
		Virtual Collocation - Power, per breaker amp			AMTFS	ESPAX	3.48										
		Virtual Collocation - Cable Support Structure, per entrance cable			AMTFS	ESPSX	13.35										
		Virtual Collocation - 2-wire Cross Connects (loop)			UEANL,UEA,UDN,UDC,UAL,UHL,UCL,UEQ, AMTFS, UDL, UNCVX, UNCDX, UNCNX	UEAC2	0.0283	24.56	23.56	9.20	8.30			19.99	19.99	19.99	19.99
		Virtual Collocation - 4-wire Cross Connects (loop)			UEA,UHL,UCL,UDL, AMTFS, UAL, UDN, UNCVX, UNCDX	UEAC4	0.0566	24.75	23.70	9.03	8.10			19.99	19.99	19.99	19.99
		Virtual Collocation - 2-Fiber Cross Connects			AMTFS,UDL12, UDLO3, U1T48, U1T12, U1T03, ULDO3, ULD12, ULD48, UDF	CNC2F	2.88	41.72	30.36	10.43	8.36			2.20	2.20		
		Virtual Collocation - 4-Fiber Cross Connects			AMTFS,UDL12, UDLO3, U1T48, U1T12, U1T03, ULDO3, ULD12, ULD48, UDF	CNC4F	5.76	51.03	39.67	13.71	11.65			2.20	2.20		
		Virtual collocation - DS1 Cross Connects			USL,ULC,AMTFS, ULR, UXTD1, UNC1X, ULDD1, U1TD1, USLEL, UNLD1	CNC1X	7.50	155.00	14.00								

CATEGORY	RATE ELEMENTS	Interim	Zone	BCS	USOC	RATES($) Rec	Nonrecurring First	Nonrecurring Add'l	Nonrecurring Disconnect First	Nonrecurring Disconnect Add'l	Svc Order Submitted Elec per LSR	Svc Order Submitted Manually per LSR	Incremental Charge - Manual Svc Order vs. Electronic-1st	Incremental Charge - Manual Svc Order vs. Electronic-Add'l	Incremental Charge - Manual Svc Order vs. Electronic-Disc 1st	Incremental Charge - Manual Svc Order vs. Electronic-Disc Add'l
											OSS Rates($)					
											SOMEC	SOMAN	SOMAN	SOMAN	SOMAN	SOMAN
	Virtual collocation - DS3 Cross Connects			USL,ULC,AMTFS,UE3, U1TD3, UXTS1, UXTD3, UNC3X, UNCSX, ULDD3, U1TS1, ULDS1, UDLSX, UNLD3	CND3X	56.25	151.90	11.83								
	Virtual Collocation - Co-Carrier Cross Connects - Fiber Cable Support Structure, per linear foot			AMTFS	VE1CB	0.0023										
	Virtual Collocation - Co-Carrier Cross Connects - Copper/Coax Cable Support Structure, per linear ft			AMTFS	VE1CD	0.0034										
	Virtual Collocation - Co-Carrier Cross Connects - Fiber Cable Support Structure,per cable			AMTFS	VE1CC		553.43									
	Virtual Collocation - Co-Carrier Cross Connects - Copper/Coax Cable Support Structure, per cable			AMTFS	VE1CE		553.43									
	Virtual collocation - Security Escort - Basic, per half hour			AMTFS	SPTBX		41.00	25.00								
	Virtual collocation - Security Escort - Overtime, per half hour			AMTFS	SPTOX		48.00	30.00								
	Virtual collocation - Security Escort - Premium, per half hour			AMTFS	SPTPX		55.00	35.00								
	Virtual collocation - Maintenance in CO - Basic, per half hour			AMTFS	CTRLX		30.64	30.64								
	Virtual collocation - Maintenance in CO - Overtime, per half hour			AMTFS	SPTOM		35.77	35.77								
	Virtual collocation - Maintenance in CO - Premium per half hour			AMTFS	SPTPM		40.90	40.90								
VIRTUAL COLLOCATION																
	Virtual Collocation - 2-wire Cross Connect, Exchange Port 2-Wire Analog - Res			UEPSR	VE1R2	0.30	12.60	12.60					18.94	8.42		
	Virtual Collocation 2-Wire Cross Connect, Exchange Port 2-Wire Line Side PBX Trunk - Bus			UEPSP	VE1R2	0.30	12.60	12.60					18.94	8.42		
	Virtual Collocation 2-Wire Cross Connect, Exchange Port 2-Wire Voice Grade PBX Trunk - Res			UEPSE	VE1R2	0.30	12.60	12.60					18.94	8.42		
	Virtual Collocation 2-Wire Cross Connect, Exchange Port 2-Wire Analog Bus			UEPSB	VE1R2	0.30	12.60	12.60					18.94	8.42		
	Virtual Collocation 2-Wire Cross Connect, Exchnage Port 2-Wire ISDN			UEPSX	VE1R2	0.30	12.60	12.60					18.94	8.42		
	Virtual Collocation 2-Wire Cross Connect, Exchange Port 2-Wire ISDN			UEPTX	VE1R2	0.30	12.60	12.60					18.94	8.42		
	Virtual Collocation 4-Wire Cross Connect, Exchange Port 4-Wire ISDN DS1			UEPEX	VE1R4	0.50	12.60	12.60					18.94	8.42		
VIRTUAL COLLOCATION																
	Virtual Collocation-2 Wire Cross Connects (Loop) for Line Splitting			UEPSR, UEPSB	VE1LS	0.03	24.56	23.56	9.20	8.30			19.99	19.99		
AIN SELECTIVE CARRIER ROUTING																
	Regional Service Establishment			SRC	SRCEC		391,788.00						19.99	19.99	19.99	19.99
	End Office Establishment			SRC	SRCEO		320.53	320.53					19.99	19.99	19.99	19.99
	Line/Port NRC, per end user			SRC	SRCLP		2.06	2.06					19.99	19.99	19.99	19.99
	Query NRC, per query			SRC		0.000448										
AIN - BELLSOUTH AIN SMS ACCESS SERVICE																
	AIN SMS Access Service - Service Establishment, Per State, Initial Setup			A1N	CAMSE		90.25	90.25					18.94	18.94		
	AIN SMS Access Service - Port Connection - Dial/Shared Access			A1N	CAMDP		29.66	29.66					18.94	18.94		
	AIN SMS Access Service - Port Connection - ISDN Access			A1N	CAM1P		29.66	29.66					18.94	18.94		
	AIN SMS Access Service - User Identification Codes - Per User ID Code			A1N	CAMAU		84.43	84.43					18.94	18.94		
	AIN SMS Access Service - Security Card, Per User ID Code, Initial or Replacement			A1N	CAMRC		35.44	35.44					18.94	18.94		
	AIN SMS Access Service - Storage, Per Unit (100 Kilobytes)					0.0023										
	AIN SMS Access Service - Session, Per Minute					0.0795604										
	AIN SMS Access Service - Company Performed Session, Per Minute					2.08										

UNBUNDLED NETWORK ELEMENTS - Georgia													Attachment: 2		Exhibit: B	
CATEGORY	RATE ELEMENTS	Interim	Zone	BCS	USOC	RATES($)					Svc Order Submitted Elec per LSR	Svc Order Submitted Manually per LSR	Incremental Charge - Manual Svc Order vs. Electronic-1st	Incremental Charge - Manual Svc Order vs. Electronic-Add'l	Incremental Charge - Manual Svc Order vs. Electronic-Disc 1st	Incremental Charge - Manual Svc Order vs. Electronic-Disc Add'l
						Rec	Nonrecurring		Nonrecurring Disconnect		OSS Rates($)					
							First	Add'l	First	Add'l	SOMEC	SOMAN	SOMAN	SOMAN	SOMAN	SOMAN
AIN - BELLSOUTH AIN TOOLKIT SERVICE																
	AIN Toolkit Service - Service Establishment Charge, Per State, Initial Setup			CAM	BAPSC		86.74	86.74					18.94	18.94		
	AIN Toolkit Service - Training Session, Per Customer				BAPVX		8,348.00	8,348.00					18.94	18.94		
	AIN Toolkit Service - Trigger Access Charge, Per Trigger, Per DN, Term. Attempt				BAPTT		19.13	19.13					18.94	18.94		
	AIN Toolkit Service - Trigger Access Charge, Per Trigger, Per DN, Off-Hook Delay				BAPTD		114.80	114.80					18.94	18.94		
	AIN Toolkit Service - Trigger Access Charge, Per Trigger, Per DN, Off-Hook Immediate				BAPTM		19.13	19.13					18.94	18.94		
	AIN Toolkit Service - Trigger Access Charge, Per Trigger, Per DN, 10-Digit PODP				BAPTO		70.06	70.06					18.94	18.94		
	AIN Toolkit Service - Trigger Access Charge, Per Trigger, Per DN, CDP				BAPTC		70.06	70.06					18.94	18.94		
	AIN Toolkit Service - Trigger Access Charge, Per Trigger, Per DN, Feature Code				BAPTF		70.06	70.06					18.94	18.94		
	AIN Toolkit Service - Query Charge, Per Query					0.0209223										
	AIN Toolkit Service - Type 1 Node Charge, Per AIN Toolkit Subscription, Per Node, Per Query					0.0053137										
	AIN Toolkit Service - SCP Storage Charge, Per SMS Access Account, Per 100 Kilobytes					1.46										
	AIN Toolkit Service - Monthly report - Per AIN Toolkit Service Subscription			CAM	BAPMS	15.96	22.64	22.64					18.94	18.94		
	AIN Toolkit Service - Special Study - Per AIN Toolkit Service Subscription			CAM	BAPLS	0.0861109	22.64	22.64					18.94	18.94		
	AIN Toolkit Service - Call Event Report - Per AIN Toolkit Service Subscription			CAM	BAPDS	15.87	22.64	22.64					18.94	18.94		
	AIN Toolkit Service - Call Event Special Study - Per AIN Toolkit Service Subscription			CAM	BAPES	0.0028704	22.64	22.64					18.94	18.94		
ENHANCED EXTENDED LINK (EELs)																
	NOTE: New EELs available in GA, TN, KY, LA, MS, & SC and density zone 1 of following MSAs: Orlando, FL; Miami, FL; Ft. Lauderdale, FL;															
	NOTE: Charlotte-Gastonia-Rockhill, NC; Greensboro-Winston Salem-High Point, NC. Use all rates below except Switch As Is Charge.															
	NOTE: In all states, EEL network elements shown below also apply to currently combined facilities which are converted to UNE rates. A Switch As Is Charge applies to currently combined facilities converted to UNEs.(Non-recurring rates do not apply.)															
	NOTE: In GA, TN, KY, LA, MS & SC the EEL network elements apply to ordinarily combined network elements.(No Switch As Is Charge.)															
	2-WIRE VOICE GRADE EXTENDED LOOP WITH DEDICATED DS1 INTEROFFICE TRANSPORT (EEL)															
	First 2-Wire VG Loop(SL2) in a DS1 Interofficed Transport Combination - Zone 1		1	UNCVX	UEAL2	16.84	104.14	78.10					18.94	8.42		
	First 2-Wire VG Grade Loop(SL2) in a DS1 Interofficed Transport Combination - Zone 2		2	UNCVX	UEAL2	19.45	104.14	78.10					18.94	8.42		
	First 2-Wire VG Grade Loop(SL2) in a DS1 Interofficed Transport Combination - Zone 3		3	UNCVX	UEAL2	30.92	104.14	78.10					18.94	8.42		
	Interoffice Transport - Dedicated - DS1 combination - Per Mile per month			UNC1X	1L5XX	0.4523										
	Interoffice Transport - Dedicated - DS1 combination - Facility Termination per month			UNC1X	U1TF1	78.47	194.63	141.51					33.63	27.49	19.88	11.85
	DS1 Channelization System Per Month			UNC1X	MQ1	126.22										
	Voice Grade COCI - DS1 To Ds0 Interface - Per Month			UNCVX	1D1VG	1.17	12.02	8.66					18.94	8.42		
	Each Additional 2-Wire VG Loop(SL 2) in the same DS1 Interoffice Transport Combination - Zone 1		1	UNCVX	UEAL2	16.84	104.14	78.10					18.94	8.42		
	Each Additional 2-Wire VG Loop(SL2) in the same DS1 Interoffice Transport Combination - Zone 2		2	UNCVX	UEAL2	19.45	104.14	78.10					18.94	8.42		
	Each Additional 2-Wire VG Loop(SL2) in the same DS1 Interoffice Transport Combination - Zone 3		3	UNCVX	UEAL2	30.92	104.14	78.10					18.94	8.42		
	Voice Grade COCI - DS1 to DS0 Channel System combination - per month			UNCVX	1D1VG	1.17	12.02	8.66					18.94	8.42		
	Nonrecurring Currently Combined Network Elements Switch -As-Is Charge			UNC1X	UNCCC		12.97	11.27					45.46	15.72		
	4-WIRE VOICE GRADE EXTENDED LOOP WITH DEDICATED DS1 INTEROFFICE TRANSPORT (EEL)															

CATEGORY		RATE ELEMENTS	Interim	Zone	BCS	USOC	RATES($)					Svc Order Submitted Elec per LSR	Svc Order Submitted Manually per LSR	Incremental Charge - Manual Svc Order vs. Electronic-1st	Incremental Charge - Manual Svc Order vs. Electronic-Add'l	Incremental Charge - Manual Svc Order vs. Electronic-Disc 1st	Incremental Charge - Manual Svc Order vs. Electronic-Disc Add'l
							Rec	Nonrecurring		Nonrecurring Disconnect		OSS Rates($)					
								First	Add'l	First	Add'l	SOMEC	SOMAN	SOMAN	SOMAN	SOMAN	SOMAN
		First 4-Wire Analog Voice Grade Loop in a DS1 Interoffice Transport Combination - Zone 1		1	UNCVX	UEAL4	22.26	206.95	170.57					18.94	8.42		
		First 4-Wire Analog Voice Grade Loop in a DS1 Interoffice Transport Combination - Zone 2		2	UNCVX	UEAL4	25.70	206.95	170.57					18.94	8.42		
		First 4-Wire Analog Voice Grade Loop in a DS1 Interoffice Transport Combination - Zone 3		3	UNCVX	UEAL4	40.86	206.95	170.57					18.94	8.42		
		Interoffice Transport - Dedicated - DS1 combination - Per Mile Per Month			UNC1X	1L5XX	0.4523										
		Interoffice Transport - Dedicated - DS1 - Facility Termination Per Month			UNC1X	U1TF1	78.47	194.63	141.51					33.63	27.49	19.88	11.85
		Channelization - Channel System DS1 to DS0 combination Per Month			UNC1X	MQ1	126.22										
		Voice Grade COCI - DS1 to DS0 Channel System combination - per month			UNCVX	1D1VG	1.17	12.02	8.66								
		Additional 4-Wire Analog Voice Grade Loop in same DS1 Interoffice Transport Combination - Zone 1		1	UNCVX	UEAL4	22.26	206.95	170.57					18.94	8.42		
		Additional 4-Wire Analog Voice Grade Loop in same DS1 Interoffice Transport Combination - Zone 2		2	UNCVX	UEAL4	25.70	206.95	170.57					18.94	8.42		
		Additional 4-Wire Analog Voice Grade Loop in same DS1 Interoffice Transport Combination - Zone 3		3	UNCVX	UEAL4	40.86	206.95	170.57					18.94	8.42		
		Voice Grade COCI - DS1 to DS0 Channel System combination - per month			UNCVX	1D1VG	1.17	12.02	8.66					18.94	8.42		
		Nonrecurring Currently Combined Network Elements Switch -As-Is Charge			UNC1X	UNCCC		12.97	11.27					45.46	15.72		
	4-WIRE 56 KBPS EXTENDED DIGITAL LOOP WITH DEDICATED DS1 INTEROFFICE TRANSPORT (EEL)																
		First 4-Wire 56Kbps Digital Grade Loop in a DS1 Interoffice Transport Combination - Zone 1		1	UNCDX	UDL56	25.75	384.56	241.20					18.94	8.42		
		First 4-wire 56Kbps Digital Grade Loop in a DS1 Interoffice Transport Combination - Zone 2		2	UNCDX	UDL56	29.74	384.56	241.20					18.94	8.42		
		First 4-Wire 56Kbps Digital Grade Loop in a DS1 Interoffice Transport Combination - Zone 3		3	UNCDX	UDL56	47.27	384.56	241.20					18.94	8.42		
		Interoffice Transport - Dedicated - DS1 combination - Per Mile Per Month			UNC1X	1L5XX	0.4523										
		Interoffice Transport - Dedicated - DS1 - combination Facility Termination Per Month			UNC1X	U1TF1	78.47	194.63	141.51					33.63	27.49	19.88	11.85
		Channelization - Channel System DS1 to DS0 combination Per Month			UNC1X	MQ1	126.22										
		OCU-DP COCI (data) - DS1 to DS0 Channel System - per month (2.4-64kbs)			UNCDX	1D1DD	1.86	12.02	8.66					18.94	8.42		
		Additional 4-Wire 56Kbps Digital Grade Loopin same DS1 Interoffice Transport Combination - Zone 1		1	UNCDX	UDL56	25.75	384.56	241.20					18.94	8.42		
		Additional 4-Wire 56Kbps Digital Grade Loopin same DS1 Interoffice Transport Combination - Zone 2		2	UNCDX	UDL56	29.74	384.56	241.20					18.94	8.42		
		Additional 4-Wire 56Kbps Digital Grade Loopin same DS1 Interoffice Transport Combination - Zone 3		3	UNCDX	UDL56	47.27	384.56	241.20					18.94	8.42		
		OCU-DP COCI (data) - DS1 to DS0 Channel System - combination per month (2.4-64kbs)			UNCDX	1D1DD	1.86	12.02	8.66					18.94	8.42		
		Nonrecurring Currently Combined Network Elements Switch -As-Is Charge			UNC1X	UNCCC		12.97	11.27					18.94	8.42		
	4-WIRE 64 KBPS EXTENDED DIGITAL LOOP WITH DEDICATED DS1 INTEROFFICE TRANSPORT (EEL)																
		First 4-Wire 64Kbps Digital Grade Loop in a DS1 Interoffice Transport Combination - Zone 1		1	UNCDX	UDL64	25.75	348.55	241.20					18.94	8.42		
		First 4-Wire 64Kbps Digital Grade Loop in a DS1 Interoffice Transport Combination - Zone 2		2	UNCDX	UDL64	29.74	348.55	241.20					18.94	8.42		
		First 4-Wire 64Kbps Digital Grade Loop in a DS1 Interoffice Transport Combination - Zone 3		3	UNCDX	UDL64	47.27	348.55	241.20					18.94	8.42		
		Interoffice Transport - Dedicated - DS1 combination - Per Mile Per Month			UNC1X	1L5XX	0.4523										

CATEGORY		RATE ELEMENTS	Interim	Zone	BCS	USOC	RATES($)					Svc Order Submitted Elec per LSR	Svc Order Submitted Manually per LSR	Incremental Charge - Manual Svc Order vs. Electronic-1st	Incremental Charge - Manual Svc Order vs. Electronic-Add'l	Incremental Charge - Manual Svc Order vs. Electronic-Disc 1st	Incremental Charge - Manual Svc Order vs. Electronic-Disc Add'l
							Rec	Nonrecurring		Nonrecurring Disconnect		OSS Rates($)					
								First	Add'l	First	Add'l	SOMEC	SOMAN	SOMAN	SOMAN	SOMAN	SOMAN
		Interoffice Transport - Dedicated - DS1 combination - Facility Termination Per Month			UNC1X	U1TF1	78.47	194.63	141.51					33.63	27.49	19.88	11.85
		Channelization - Channel System DS1 to DS0 combination Per Month			UNC1X	MQ1	126.22										
		OCU-DP COCI (data) - DS1 to DS0 Channel System combination - per month (2.4-64kbs)			UNCDX	1D1DD	1.86	12.02	8.66					18.94	8.42		
		Additional 4-Wire 64Kbps Digital Grade Loopin same DS1 Interoffice Transport Combination - Zone 1		1	UNCDX	UDL64	25.75	348.55	241.20					18.94	8.42		
		Additional 4-Wire 64Kbps Digital Grade Loopin same DS1 Interoffice Transport Combination - Zone 2		2	UNCDX	UDL64	29.74	348.55	241.20					18.94	8.42		
		Additional 4-Wire 64Kbps Digital Grade Loopin same DS1 Interoffice Transport Combination - Zone 3		3	UNCDX	UDL64	47.27	348.55	241.20					18.94	8.42		
		OCU-DP COCI (data) - DS1 to DS0 Channel System combination - per month (2.4-64kbs)			UNCDX	1D1DD	1.86	12.02	8.66					18.94	8.42		
		Nonrecurring Currently Combined Network Elements Switch -As-Is Charge			UNC1X	UNCCC		12.97	11.27					45.46	15.72		
	4-WIRE DS1 DIGITAL EXTENDED LOOP WITH DEDICATED DS1 INTEROFFICE TRANSPORT (EEL)																
		4-Wire DS1 Digital Loop in Combination with DS1 Interoffice Transport - Zone 1		1	UNC1X	USLXX	55.53	443.20	138.69					18.94	8.42		
		4-Wire DS1 Digital Loop in Combination with DS1 Interoffice Transport - Zone 2		2	UNC1X	USLXX	64.13	443.20	138.69					18.94	8.42		
		4-Wire DS1 Digital Loop in Combination with DS1 Interoffice Transport - Zone 3		3	UNC1X	USLXX	101.93	443.20	138.69					18.94	8.42		
		Interoffice Transport - Dedicated - DS1 combination - Per Mile Per Month			UNC1X	1L5XX	0.4523										
		Interoffice Transport - Dedicated - DS1 combination - Facility Termination Per Month			UNC1X	U1TF1	78.47	194.63	141.51					33.63	27.49	19.88	11.85
		Nonrecurring Currently Combined Network Elements Switch -As-Is Charge			UNC1X	UNCCC		12.97	11.27					45.46	15.72		
	4-WIRE DS1 DIGITAL EXTENDED LOOP WITH DEDICATED DS3 INTEROFFICE TRANSPORT (EEL)																
		First DS1Loop in DS3 Interoffice Transport Combination - Zone 1		1	UNC1X	USLXX	55.53	443.20	138.69					18.94	8.42		
		First DS1Loop in DS3 Interoffice Transport Combination - Zone 2		2	UNC1X	USLXX	64.13	443.20	138.69					18.94	8.42		
		First DS1Loop in DS3 Interoffice Transport Combination - Zone 3		3	UNC1X	USLXX	101.93	443.20	138.69					18.94	8.42		
		Interoffice Transport - Dedicated - DS3 combination - Per Mile Per Month			UNC3X	1L5XX	2.72										
		Interoffice Transport - Dedicated - DS3 - Facility Termination per month			UNC3X	U1TF3	788.00	198.45	153.15					37.55	37.55	18.03	18.03
		DS3 to DS1 Channel System combination per month			UNC3X	MQ3	137.73	196.66	204.61					18.94	8.42		
		DS3 Interface Unit (DS1 COCI) combination per month			UNC1X	UC1D1	11.02	12.02	8.66					18.94	8.42		
		Additional DS1Loop in DS3 Interoffice Transport Combination - Zone 1		1	UNC1X	USLXX	55.53	443.20	138.69					18.94	8.42		
		Additional DS1Loop in DS3 Interoffice Transport Combination - Zone 2		2	UNC1X	USLXX	64.13	443.20	138.69					18.94	8.42		
		Additional DS1Loop in DS3 Interoffice Transport Combination - Zone 3		3	UNC1X	USLXX	101.93	443.20	138.69					18.94	8.42		
		DS3 Interface Unit (DS1 COCI) combination per month			UNC1X	UC1D1	11.02	12.02	8.66					18.94	8.42		
		Nonrecurring Currently Combined Network Elements Switch -As-Is Charge			UNC3X	UNCCC		12.97	11.27					45.46	15.72		
	2-WIRE VOICE GRADE EXTENDED LOOP/ 2 WIRE VOICE GRADE INTEROFFICE TRANSPORT (EEL)																
		2-WireVG Loop used with 2-wire VG Interoffice Transport Combination - Zone 1		1	UNCVX	UEAL2	16.84	104.14	78.10					18.94	8.42		
		2-WireVG Loop used with 2-wire VG Interoffice Transport Combination - Zone 2		2	UNCVX	UEAL2	19.45	104.14	78.10					18.94	8.42		
		2-WireVG Loop used with 2-wire VG Interoffice Transport Combination - Zone 3		3	UNCVX	UEAL2	30.92	104.14	78.10					18.94	8.42		

CATEGORY	RATE ELEMENTS	Interim	Zone	BCS	USOC	RATES($) Rec	Nonrecurring First	Nonrecurring Add'l	Nonrecurring Disconnect First	Nonrecurring Disconnect Add'l	Svc Order Submitted Elec per LSR	Svc Order Submitted Manually per LSR	Incremental Charge - Manual Svc Order vs. Electronic-1st	Incremental Charge - Manual Svc Order vs. Electronic-Add'l	Incremental Charge - Manual Svc Order vs. Electronic-Disc 1st	Incremental Charge - Manual Svc Order vs. Electronic-Disc Add'l
											OSS Rates($)					
											SOMEC	SOMAN	SOMAN	SOMAN	SOMAN	SOMAN
	Interoffice Transport - Dedicated - 2-wire VG combination - Per Mile Per Month			UNCVX	1L5XX	0.0222										
	Interoffice Transport - Dedicated - 2- Wire Voice Grade combination - Facility Termination per month			UNCVX	U1TV2	17.07	79.61	36.08					18.94	18.94		
	Nonrecurring Currently Combined Network Elements Switch -As-Is Charge			UNCVX	UNCCC		12.97	11.27					45.46	15.72		
4-WIRE VOICE GRADE EXTENDED LOOP/ 4 WIRE VOICE GRADE INTEROFFICE TRANSPORT (EEL)																
	4-WireVG Loop used with 4-wire VG Interoffice Transport Combination - Zone 1		1	UNCVX	UEAL4	22.26	206.95	170.57					18.94	8.42		
	4-WireVG Loop used with 4-wire VG Interoffice Transport Combination - Zone 2		2	UNCVX	UEAL4	25.70	206.95	170.57					18.94	8.42		
	4-WireVG Loop used with 4-wire VG Interoffice Transport Combination - Zone 3		3	UNCVX	UEAL4	40.86	206.95	170.57					18.94	8.42		
	Interoffice Transport - Dedicated - 4-wire VG combination - Per Mile Per Month			UNCVX	1L5XX	0.0222										
	Interoffice Transport - Dedicated - 4- Wire Voice Grade combination - Facility Termination per month			UNCVX	U1TV4	17.07	79.61	36.08					18.94	18.94		
	Nonrecurring Currently Combined Network Elements Switch -As-Is Charge			UNCVX	UNCCC		12.97	11.27					45.46	15.72		
DS3 DIGITAL EXTENDED LOOP WITH DEDICATED DS3 INTEROFFICE TRANSPORT (EEL)																
	High Capacity Unbundled Local Loop - DS3 combination - Per Mile per month			UNC3X	1L5ND	8.90										
	High Capacity Unbundled Local Loop - DS3 combination - Facility Termination per month			UNC3X	UE3PX	390.34	639.50	426.40					37.55	37.55	18.03	18.03
	Interoffice Transport - Dedicated - DS3 - Per Mile per month			UNC3X	1L5XX	2.72										
	Interoffice Transport - Dedicated - DS3 combination - Facility Termination per per month			UNC3X	U1TF3	788.00	198.45	153.15					37.55	37.55	18.03	18.03
	Nonrecurring Currently Combined Network Elements Switch -As-Is Charge			UNC3X	UNCCC		12.97	11.27					45.46	15.72		
STS1 DIGITAL EXTENDED LOOP WITH DEDICATED STS1 INTEROFFICE TRANSPORT (EEL)																
	High Capacity Unbundled Local Loop - STS1 combination - Per Mile per month			UNCSX	1L5ND	8.90										
	High Capacity Unbundled Local Loop - STS1 combination - Facility Termination per month			UNCSX	UDLS1	421.59	639.50	426.40					37.55	37.55	18.03	18.03
	Interoffice Transport - Dedicated - STS1 combination - Per Mile per month			UNCSX	1L5XX	2.72										
	Interoffice Transport - Dedicated - STS1 combination - Facility Termination per month			UNCSX	U1TFS	783.63	198.45	449.91					37.55	37.55	18.03	18.03
	Nonrecurring Currently Combined Network Elements Switch -As-Is Charge			UNCSX	UNCCC		12.97	11.27					45.46	15.72		
2-WIRE ISDN EXTENDED LOOP WITH DS1 INTEROFFICE TRANSPORT (EEL)																
	First 2-Wire ISDN Loop in a DS1 Interoffice Combination Transport - Zone 1		1	UNCNX	U1L2X	21.89	233.38	180.38					18.94	8.42		
	First 2-Wire ISDN Loop in a DS1 Interoffice Combination Transport - Zone 2		2	UNCNX	U1L2X	25.27	233.38	180.38					18.94	8.42		
	First 2-Wire ISDN Loop in a DS1 Interoffice Combination Transport - Zone 3		3	UNCNX	U1L2X	40.17	233.38	180.38					18.94	8.42		
	Interoffice Transport - Dedicated - DS1 combination - Per Mile			UNC1X	1L5XX	0.4523										
	Interoffice Transport - Dedicated - DS1 combintion - Facility Termination per month			UNC1X	U1TF1	78.47	194.63	141.51					33.63	27.49	19.88	11.85
	Channelization - Channel System DS1 to DS0 combination - per month			UNC1X	MQ1	126.22										
	2-wire ISDN COCI (BRITE) - DS1 to DS0 Channel System combination - per month			UNCNX	UC1CA	3.37	12.02	8.66					33.63	27.49	19.88	11.85
	Additional 2-wire ISDN Loop in same DS1Interoffice Transport Combination - Zone 1		1	UNCNX	U1L2X	21.89	233.38	180.38					18.94	8.42		
	Additional 2-wire ISDN Loop in same DS1Interoffice Transport Combination - Zone 2		2	UNCNX	U1L2X	25.27	233.38	180.38					18.94	8.42		

UNBUNDLED NETWORK ELEMENTS - Georgia														Attachment: 2		Exhibit: B	
CATEGORY	RATE ELEMENTS	Interim	Zone	BCS	USOC	RATES($)					Svc Order Submitted Elec per LSR	Svc Order Submitted Manually per LSR	Incremental Charge - Manual Svc Order vs. Electronic-1st	Incremental Charge - Manual Svc Order vs. Electronic-Add'l	Incremental Charge - Manual Svc Order vs. Electronic-Disc 1st	Incremental Charge - Manual Svc Order vs. Electronic-Disc Add'l
						Rec	Nonrecurring		Nonrecurring Disconnect		OSS Rates($)					
							First	Add'l	First	Add'l	SOMEC	SOMAN	SOMAN	SOMAN	SOMAN	SOMAN
	Additional 2-wire ISDN Loop in same DS1Interoffice Transport Combination - Zone 3		3	UNCNX	U1L2X	40.17	233.38	180.38					18.94	8.42		
	2-wire ISDN COCI (BRITE) - DS1 to DS0 Channel System combintaion- per month			UNCNX	UC1CA	3.37	12.02	8.66					33.63	27.49	19.88	11.85
	Nonrecurring Currently Combined Network Elements Switch -As-Is Charge			UNC1X	UNCCC		12.97	11.27					45.46	15.72		
4-WIRE DS1 DIGITAL EXTENDED LOOP WITH DEDICATED STS-1 INTEROFFICE TRANSPORT (EEL)																
	First DS1 Loop in STS1 Interoffice Transport Combination - Zone 1		1	UNC1X	USLXX	55.53	443.20	138.69					18.94	8.42		
	First DS1 Loop in STS1 Interoffice Transport Combination - Zone 2		2	UNC1X	USLXX	64.13	443.20	138.69					18.94	8.42		
	First DS1 Loop in STS1 Interoffice Transport Combination - Zone 3		3	UNC1X	USLXX	101.93	443.20	138.69					18.94	8.42		
	Interoffice Transport - Dedicated - STS1 combination - Per Mile Per Month			UNCSX	1L5XX	2.72										
	Interoffice Transport - Dedicated - STS1 combination - Facility Termination			UNCSX	U1TFS	783.63	198.45	449.91					37.55	37.55	18.08	18.03
	STS1 to DS1 Channel System conbination per month			UNCSX	MQ3	182.04	196.66	204.61					37.55	37.55	18.08	18.03
	DS3 Interface Unit (DS1 COCI) combination per month			UNC1X	UC1D1	11.02	12.02	8.66					37.55	37.55	18.08	18.03
	Additional DS1Loop in STS1 Interoffice Transport Combination - Zone 1		1	UNC1X	USLXX	55.53	443.20	138.69					18.94	8.42		
	Additional DS1Loop in STS1 Interoffice Transport Combination - Zone 2		2	UNC1X	USLXX	64.13	443.20	138.69					18.94	8.42		
	Additional DS1Loop in STS1 Interoffice Transport Combination - Zone 3		3	UNC1X	USLXX	101.93	443.20	138.69					18.94	8.42		
	DS3 Interface Unit (DS1 COCI) combination per month			UNC1X	UC1D1	11.02	12.02	8.66					18.94	8.42		
	Nonrecurring Currently Combined Network Elements Switch -As-Is Charge			UNCSX	UNCCC		12.97	11.27					45.46	15.72		
4-WIRE 56 KBPS DIGITAL EXTENDED LOOP WITH 56 KBPS INTEROFFICE TRANSPORT (EEL)																
	4-wire 56 kbps Loop/4-wire 56 kbps Interoffice Transport Combination - Zone 1		1	UNCDX	UDL56	25.75	384.56	241.20					18.94	8.42		
	4-wire 56 kbps Loop/4-wire 56 kbps Interoffice Transport Combination - Zone 2		2	UNCDX	UDL56	29.74	384.56	241.20					18.94	8.42		
	4-wire 56 kbps Loop/4-wire 56 kbps Interoffice Transport Combination - Zone 3		3	UNCDX	UDL56	47.27	384.56	241.20					18.94	8.42		
	Interoffice Transport - Dedicated - 4-wire 56 kbps combination - Per Mile			UNCDX	1L5XX	0.0222										
	Interoffice Transport - Dedicated - 4-wire 56 kbps combination - Facility Termination			UNCDX	U1TD5	16.45	147.07	111.75					33.63	27.49	19.88	11.85
	Nonrecurring Currently Combined Network Elements Switch -As-Is Charge			UNCDX	UNCCC		12.97	11.27					45.46	15.72		
4-WIRE 64 KBPS DIGITAL EXTENDED LOOP WITH 64 KBPS INTEROFFICE TRANSPORT (EEL)																
	4-wire 64 kbps Loop/4-wire 64 kbps Interoffice Transport Combination - Zone 1		1	UNCDX	UDL64	25.75	348.55	241.20					18.94	8.42		
	4-wire 64 kbps Loop/4-wire 64 kbps Interoffice Transport Combination - Zone 2		2	UNCDX	UDL64	29.74	348.55	241.20					18.94	8.42		
	4-wire 64 kbps Loop/4-wire 64 kbps Interoffice Transport Combination - Zone 3		3	UNCDX	UDL64	47.27	348.55	241.20					18.94	8.42		
	Interoffice Transport - Dedicated - 4-wire 64 kbps combination - Per Mile			UNCDX	1L5XX	0.0222										
	Interoffice Transport - Dedicated - 4-wire 64 kbps combination - Facility Termination			UNCDX	U1TD6	16.45	147.07	111.75					33.63	27.49	19.88	11.85
	Nonrecurring Currently Combined Network Elements Switch -As-Is Charge			UNCDX	UNCCC		12.97	11.27					45.46	15.72		
ADDITIONAL NETWORK ELEMENTS																
	When used as a part of a currently combined facility, the non-recurrng charges do not apply, but a Switch As Is charge does apply.															
	When used as ordinarilty combined network elements in Georgia, the non-recurring charges apply and the Switch As Is Charge does not.															
	Node (SynchroNet)															
	Nonrecurring Currently Combined Network Elements "Switch As Is" Charge (One applies to each combination)															

CATEGORY	RATE ELEMENTS	Interim	Zone	BCS	USOC	RATES($) Rec	Nonrecurring First	Nonrecurring Add'l	Nonrecurring Disconnect First	Nonrecurring Disconnect Add'l	Svc Order Submitted Elec per LSR	Svc Order Submitted Manually per LSR	Incremental Charge - Manual Svc Order vs. Electronic-1st	Incremental Charge - Manual Svc Order vs. Electronic-Add'l	Incremental Charge - Manual Svc Order vs. Electronic-Disc 1st	Incremental Charge - Manual Svc Order vs. Electronic-Disc Add'l
											OSS Rates($)					
											SOMEC	SOMAN	SOMAN	SOMAN	SOMAN	SOMAN
	Nonrecurring Currently Combined Network Elements Switch -As-Is Charge - 2 wire/4-Wire VG			UNCVX	UNCCC		12.97	11.27					18.94	18.94		
	Nonrecurring Currently Combined Network Elements Switch -As-Is Charge - 56/64 kbps			UNCDX	UNCCC		12.97	11.27					18.94	18.94		
	Nonrecurring Currently Combined Network Elements Switch -As-Is Charge - DS1			UNC1X	UNCCC		12.97	11.27					18.94	18.94		
	Nonrecurring Currently Combined Network Elements Switch -As-Is Charge - DS3			UNC3X	UNCCC		12.97	11.27					18.94	18.94		
	Nonrecurring Currently Combined Network Elements Switch -As-Is Charge - STS1			UNCSX	UNCCC		12.97	11.27					18.94	18.94		
	NOTE: Local Channel - Dedicated Transport - minimum billing period - Below DS3=one month, DS3 and above=four months															
	Local Channel - Dedicated - 2-Wire Voice Grade per month			UNCXV	ULDV2	13.91	272.07	60.43					18.94	18.94		
	Local Channel - Dedicated - 4-Wire Voice Grade per month			UNCXV	ULDV4	14.99	272.07	60.43					18.94	18.94		
	Local Channel - Dedicated - DS1 Per Month			UNC1X	ULDF1	38.36	356.15	312.89								
	Local Channel - Dedicated - DS3 - Per Mile per month			UNC3X	1L5NC	6.92										
	Local Channel - Dedicated - DS3 - Facility Termination per month			UNC3X	ULDF3	515.91	639.50	426.31					18.94	18.94		
	Local Channel - Dedicated - STS-1- Per Mile per month			UNCSX	1L5NC	6.92										
	Local Channel - Dedicated - STS-1 - Facility Termination per month			UNCSX	ULDFS	517.56	639.50	426.31					18.94	18.94		
UNBUNDLED LOCAL EXCHANGE SWITCHING(PORTS)																
Exchange Ports																
NOTE: Although the Port Rate includes all available features in GA, KY, LA & TN, the desired features will need to be ordered using retail USOCs																
2-WIRE VOICE GRADE LINE PORT RATES (RES)																
	Exchange Ports - 2-Wire Analog Line Port- Res.			UEPSR	UEPRL	1.85	17.16	17.16					18.94	8.42		
	Exchange Ports - 2-Wire Analog Line Port with Caller ID - Res.			UEPSR	UEPRC	1.85	17.16	17.16					18.94	8.42		
	Exchange Ports - 2-Wire Analog Line Port outgoing only - Res.			UEPSR	UEPRO	1.85	17.16	17.16					18.94	8.42		
	Exchange Ports - 2-Wire VG unbundled res, low usage line port with Caller ID (LUM)			UEPSR	UEPAP	1.85		17.16					18.94	8.42		
	Subsequent Activity			UEPSR	USASC	0.00	0.00	0.00					18.94	8.42		
FEATURES																
	All Available Vertical Features			UEPSR	UEPVF	0.00	0.00	0.00					18.94	8.42		
2-WIRE VOICE GRADE LINE PORT RATES (BUS)																
	Exchange Ports - 2-Wire Analog Line Port without Caller ID - Bus			UEPSB	UEPBL	1.85	17.16	17.16					18.94	8.42		
	Exchange Ports - 2-Wire VG unbundled Line Port with unbundled port with Caller+E484 ID - Bus.			UEPSB	UEPBC	1.85	17.16	17.16					18.94	8.42		
	Exchange Ports - 2-Wire Analog Line Port outgoing only - Bus.			UEPSB	UEPBO	1.85	17.16	17.16					18.94	8.42		
	Exhange Ports - 2-Wire VG unbundled incoming only port with Caller ID - Bus			UEPSB	UEPB1	1.85	17.16	17.16					18.94	8.42		
	Subsequent Activity			UEPSB	USASC	0.00	0.00	0.00					18.94	8.42		
FEATURES																
	All Available Vertical Features			UEPSB	UEPVF	0.00	0.00	0.00					18.94	8.42		
EXCHANGE PORT RATES (DID & PBX)																
	2-Wire VG Unbundled 2-Way PBX Trunk - Res			UEPSE	UEPRD	1.85	17.16	17.16					18.94	8.42		
	2-Wire VG Line Side Unbundled 2-Way PBX Trunk - Bus			UEPSP	UEPPC	1.85	17.16	17.16					18.94	8.42		
	2-Wire VG Line Side Unbundled Outward PBX Trunk - Bus			UEPSP	UEPPO	1.85	17.16	17.16					18.94	8.42		
	2-Wire VG Line Side Unbundled Incoming PBX Trunk - Bus			UEPSP	UEPP1	1.85	17.16	17.16					18.94	8.42		
	2-Wire Analog Long Distance Terminal PBX Trunk - Bus			UEPSP	UEPLD	1.85	17.16	17.16					18.94	8.42		
	2-Wire Voice Unbundled PBX LD Terminal Ports			UEPSP	UEPLD	1.85	17.16	17.16					18.94	8.42		
	2-Wire Vice Unbundled 2-Way PBX Usage Port			UEPSP	UEPXA	1.85	17.16	17.16					18.94	8.42		
	2-Wire Voice Unbundled PBX Toll Terminal Hotel Ports			UEPSP	UEPXB	1.85	17.16	17.16					18.94	8.42		
	2-Wire Voice Unbundled PBX LD DDD Terminals Port			UEPSP	UEPXC	1.85	17.16	17.16					18.94	8.42		
	2-Wire Voice Unbundled PBX LD Terminal Switchboard Port			UEPSP	UEPXD	1.85	17.16	17.16					18.94	8.42		
	2-Wire Voice Unbundled PBX LD Terminal Switchboard IDD Capable Port			UEPSP	UEPXE	1.85	17.16	17.16					18.94	8.42		

CATEGORY	RATE ELEMENTS	Interim	Zone	BCS	USOC	RATES($)					Svc Order Submitted Elec per LSR	Svc Order Submitted Manually per LSR	Incremental Charge - Manual Svc Order vs. Electronic-1st	Incremental Charge - Manual Svc Order vs. Electronic-Add'l	Incremental Charge - Manual Svc Order vs. Electronic-Disc 1st	Incremental Charge - Manual Svc Order vs. Electronic-Disc Add'l
						Rec	Nonrecurring		Nonrecurring Disconnect		OSS Rates($)					
							First	Add'l	First	Add'l	SOMEC	SOMAN	SOMAN	SOMAN	SOMAN	SOMAN
	2-Wire Voice Unbundled 2-Way PBX Hotel/Hospital Economy Administrative Calling Port			UEPSP	UEPXL	1.85	17.16	17.16					18.94	8.42		
	2-Wire Voice Unbundled 2-Way PBX Hotel/Hospital Economy Room Calling Port			UEPSP	UEPXM	1.85	17.16	17.16					18.94	8.42		
	2-Wire Voice Unbundled 1-Way Outgoing PBX Hotel/Hospital Discount Room Calling Port			UEPSP	UEPXO	1.85	17.16	17.16					18.94	8.42		
	2-Wire Voice Unbundled 1-Way Outgoing PBX Measured Port			UEPSP	UEPXS	1.85	17.16	17.16					18.94	8.42		
	Subsequent Activity			UEPSP	USASC	0.00	0.00	0.00					18.94	8.42		
FEATURES																
	All Available Vertical Features			UEPSP UEPSE	UEPVF	0.00	0.00	0.00					18.94	8.42		
EXCHANGE PORT RATES (COIN)																
	Exchange Ports - Coin Port					2.05	17.16	17.16					18.94	8.42		
NOTE: Transmission/usage charges associated with POTS circuit switched usage will also apply to circuit switched voice and/or circuit switched data transmission by B-Channels associated with 2-wire ISDN ports.																
NOTE: Access to B Channel or D Channel Packet capabilities will be available only through BFR/New Business Request Process. Rates for the packet capabilities will be determined via the Bona Fide Request/New Business Request Process.																
UNBUNDLED LOCAL EXCHANGE SWITCHING(PORTS)																
EXCHANGE PORT RATES (DID & PBX)																
	Exchange Ports - 2-Wire DID Port			UEPEX	UEPP2	11.35	61.91	61.91					19.99	19.99	19.99	19.99
	Exchange Ports - DDITS Port - 4-Wire DS1 Port with DID capability			UEPDD	UEPDD	120.80	108.38	60.88					19.99	19.99	19.99	19.99
	Exchange Ports - 2-Wire ISDN Port (See Notes below.)			UEPTX UEPSX	U1PMA	13.47	47.37	47.37					39.98	39.98		
	All Features Offered			UEPTX UEPSX	UEPVF	0.00	0.00	0.00								
NOTE: Transmission/usage charges associated with POTS circuit switched usage will also apply to circuit switched voice and/or circuit switched data transmission by B-Channels associated with 2-wire ISDN ports.																
NOTE: Access to B Channel or D Channel Packet capabilities will be available only through BFR/New Business Request Process. Rates for the packet capabilities will be determined via the Bona Fide Request/New Business Request Process.																
	Exchange Ports - 2-Wire ISDN Port -- Channel Profiles			UEPTX UEPSX	U1UMA	0.00	0.00	0.00								
	Exchange Ports - 4-Wire ISDN DS1 Port			UEPEX	UEPEX	163.16	186.80	186.80					37.88	37.88		
UNBUNDLED LOCAL SWITCHING, PORT USAGE																
End Office Switching (Port Usage)																
	End Office Switching Function, Per MOU					0.0016333										
	End Office Trunk Port - Shared, Per MOU					0.0001564										
Tandem Switching (Port Usage) (Local or Access Tandem)																
	Tandem Switching Function Per MOU					0.0006757										
	Tandem Trunk Port - Shared, Per MOU					0.0002126										
Common Transport																
	Common Transport - Per Mile, Per MOU					0.000008										
	Common Transport - Facilities Termination Per MOU					0.0004152										
UNBUNDLED PORT/LOOP COMBINATIONS - COST BASED RATES																
Cost Based Rates are applied where BellSouth is required by FCC and/or State Commission rule to provide Unbundled Local Switching or Switch Ports.																
Features shall apply to the Unbundled Port/Loop Combination - Cost Based Rate section in the same manner as they are applied to the Stand-Alone Unbundled Port section of this Rate Exhibit.																
End Office and Tandem Switching Usage and Common Transport Usage rates in the Port section of this rate exhibit shall apply to all combinations of loop/port network elements except for UNE Coin Port/Loop Combinations.																
For Georgia, Kentucky, Louisiana, Mississippi, South Carolina and Tennessee, the recurring UNE Port and Loop charges listed apply to Currently Combined and Not Currently Combined Combos. The first and additional Port nonrecurring charges apply to Not Currently Combined Combos for all states. In GA, KY, LA, MS, SC and TN these nonrecurring charges are commission ordered cost based rates and in AL, FL and NC these nonrecurring charges are Market Rates and are also listed in the Market Rate section. For Currently Combined Combos in all other states, the nonrecurring charges shall be those identified in the Nonrecurring - Currently Combined sections.																
2-WIRE VOICE GRADE LOOP WITH 2-WIRE LINE PORT (RES)																
UNE Port/Loop Combination Rates																
	2-Wire VG Loop/Port Combo - Zone 1		1			12.59										
	2-Wire VG Loop/Port Combo - Zone 2		2			14.26										
	2-Wire VG Loop/Port Combo - Zone 3		3			21.62										
UNE Loop Rates																
	2-Wire Voice Grade Loop (SL1) - Zone 1		1	UEPRX	UEPLX	10.80										
	2-Wire Voice Grade Loop (SL1) - Zone 2		2	UEPRX	UEPLX	12.47										
	2-Wire Voice Grade Loop (SL1) - Zone 3		3	UEPRX	UEPLX	19.83										
2-Wire Voice Grade Line Port Rates (Res)																
	2-Wire voice unbundled port - residence			UEPRX	UEPRL	1.79	22.14	15.25	8.45	3.91			33.67	7.88	11.17	3.91
	2-Wire voice unbundled port with Caller ID - res			UEPRX	UEPRC	1.79	22.14	15.25	8.45	3.91			37.06	7.88	11.17	3.91
	2-Wire voice unbundled port outgoing only - res			UEPRX	UEPRO	1.79	22.14	15.25	8.45	3.91			33.67	7.88	11.17	3.91
	2-Wire voice unbundles res, low usage line port with Caller ID (LUM)			UEPRX	UEPAP	1.79	22.14	15.25	8.45	3.91			33.67	7.88	11.17	3.91
FEATURES																
	All Features Offered			UEPRX	UEPVF	0.00	0.00	0.00					33.67	7.88	11.17	3.91

UNBUNDLED NETWORK ELEMENTS - Georgia													Attachment: 2		Exhibit: B	
CATEGORY	RATE ELEMENTS	Interim	Zone	BCS	USOC	RATES($)					Svc Order Submitted Elec per LSR	Svc Order Submitted Manually per LSR	Incremental Charge - Manual Svc Order vs. Electronic-1st	Incremental Charge - Manual Svc Order vs. Electronic-Add'l	Incremental Charge - Manual Svc Order vs. Electronic-Disc 1st	Incremental Charge - Manual Svc Order vs. Electronic-Disc Add'l
						Rec	Nonrecurring		Nonrecurring Disconnect		OSS Rates($)					
							First	Add'l	First	Add'l	SOMEC	SOMAN	SOMAN	SOMAN	SOMAN	SOMAN
	LOCAL NUMBER PORTABILITY															
	Local Number Portability (1 per port)			UEPRX	LNPCX	0.35										
	NONRECURRING CHARGES (NRCs) - CURRENTLY COMBINED															
	2-Wire Voice Grade Loop / Line Port Combination - Conversion - Switch-as-is			UEPRX	USAC2		2.01	0.3108					33.67	7.88	11.17	3.91
	2-Wire Voice Grade Loop / Line Port Combination - Conversion - Switch with change			UEPRX	USACC		2.01	0.3108					33.67	7.88		
	ADDITIONAL NRCs															
	2-Wire Voice Grade Loop/Line Port Combination - Subsequent Activity			UEPRX	USAS2	0.00	0.00	0.00					33.67	7.88	11.17	3.91
	2-WIRE VOICE GRADE LOOP WITH 2-WIRE LINE PORT (BUS)															
	UNE Port/Loop Combination Rates															
	2-Wire VG Loop/Port Combo - Zone 1		1			12.59										
	2-Wire VG Loop/Port Combo - Zone 2		2			14.26										
	2-Wire VG Loop/Port Combo - Zone 3		3			21.62										
	UNE Loop Rates															
	2-Wire Voice Grade Loop (SL1) - Zone 1		1	UEPBX	UEPLX	10.80										
	2-Wire Voice Grade Loop (SL1) - Zone 2		2	UEPBX	UEPLX	12.47										
	2-Wire Voice Grade Loop (SL1) - Zone 3		3	UEPBX	UEPLX	19.83										
	2-Wire Voice Grade Line Port (Bus)															
	2-Wire voice unbundled port without Caller ID - bus			UEPBX	UEPBL	1.79	22.14	15.25	8.45	3.91			33.67	7.88	11.17	3.91
	2-Wire voice unbundled port with Caller + E484 ID - bus			UEPBX	UEPBC	1.79	22.14	15.25	8.45	3.91			33.67	7.88	11.17	3.91
	2-Wire voice unbundled port outgoing only - bus			UEPBX	UEPBO	1.79	22.14	15.25	8.45	3.91			33.67	7.88	11.17	3.91
	2-Wire voice unbundled incoming only port with Caller ID - Bus			UEPBX	UPEB1	1.79	22.14	15.25	8.45	3.91			33.67	7.88	11.17	3.91
	LOCAL NUMBER PORTABILITY															
	Local Number Portability (1 per port)			UEPBX	LNPCX	0.35										
	FEATURES															
	All Features Offered			UEPBX	UEPVF	0.00	0.00	0.00					33.67	7.88	11.17	3.91
	NONRECURRING CHARGES (NRCs) - CURRENTLY COMBINED															
	2-Wire Voice Grade Loop / Line Port Combination - Conversion - Switch-as-is			UEPBX	USAC2		2.01	0.3108					33.67	7.88	11.17	3.91
	2-Wire Voice Grade Loop / Line Port Combination - Conversion - Switch with change			UEPBX	USACC		2.01	0.3108								
	ADDITIONAL NRCs															
	2-Wire Voice Grade Loop/Line Port Combination - Subsequent Activity			UEPBX	USAS2		0.00	0.00					33.67	7.88	11.17	3.91
	2-WIRE VOICE GRADE LOOP WITH 2-WIRE LINE PORT (RES - PBX)															
	UNE Port/Loop Combination Rates															
	2-Wire VG Loop/Port Combo - Zone 1		1			12.59										
	2-Wire VG Loop/Port Combo - Zone 2		2			14.26										
	2-Wire VG Loop/Port Combo - Zone 3		3			21.62										
	UNE Loop Rates															
	2-Wire Voice Grade Loop (SL 1) - Zone 1		1	UEPRG	UEPLX	10.80										
	2-Wire Voice Grade Loop (SL 1) - Zone 2		2	UEPRG	UEPLX	12.47										
	2-Wire Voice Grade Loop (SL 1) - Zone 3		3	UEPRG	UEPLX	19.83										
	2-Wire Voice Grade Line Port Rates (RES - PBX)															
	2-Wire VG Unbundled Combination 2-Way PBX Trunk Port - Res			UEPRG	UEPRD	1.79	22.14	15.25	8.45	3.91			33.67	7.88	11.17	3.91
	LOCAL NUMBER PORTABILITY															
	Local Number Portability (1 per port)			UEPRG	LNPCP	3.15	0.00	0.00					33.67	7.88	11.17	3.91
	FEATURES															
	All Features Offered			UEPRG	UEPVF	0.00	0.00	0.00					33.67	7.88	11.17	3.91
	NONRECURRING CHARGES (NRCs) - CURRENTLY COMBINED															
	2-Wire Voice Grade Loop/ Line Port Combination (PBX) - Conversion - Switch-As-Is			UEPRG	USAC2		2.01	0.3108					33.67	7.88	11.17	3.91
	2-Wire Voice Grade Loop/ Line Port Combination (PBX) - Conversion - Switch with Change			UEPRG	USACC		2.01	0.3108					33.67	7.88	11.17	3.91
	ADDITIONAL NRCs															

CATEGORY	RATE ELEMENTS	Interim	Zone	BCS	USOC	RATES($) Rec	Nonrecurring First	Nonrecurring Add'l	Nonrecurring Disconnect First	Nonrecurring Disconnect Add'l	Svc Order Submitted Elec per LSR	Svc Order Submitted Manually per LSR	Incremental Charge - Manual Svc Order vs. Electronic-1st	Incremental Charge - Manual Svc Order vs. Electronic-Add'l	Incremental Charge - Manual Svc Order vs. Electronic-Disc 1st	Incremental Charge - Manual Svc Order vs. Electronic-Disc Add'l
											OSS Rates($)					
											SOMEC	SOMAN	SOMAN	SOMAN	SOMAN	SOMAN
	2-Wire Voice Grade Loop/ Line Port Combination (PBX) - Subsequent Activity			UEPRG	USAS2	0.00	0.00	0.00					33.67	7.88	11.17	3.91
	PBX Subsequent Activity - Change/Rearrange Multiline Hunt Group						14.64	14.64					19.99	19.99	19.99	19.99
2-WIRE VOICE GRADE LOOP WITH 2-WIRE LINE PORT (BUS - PBX)																
UNE Port/Loop Combination Rates																
	2-Wire VG Loop/Port Combo - Zone 1		1			12.59										
	2-Wire VG Loop/Port Combo - Zone 2		2			14.26										
	2-Wire VG Loop/Port Combo - Zone 3		3			21.62										
UNE Loop Rates																
	2-Wire Voice Grade Loop (SL 1) - Zone 1		1	UEPPX	UEPLX	10.80										
	2-Wire Voice Grade Loop (SL 1) - Zone 2		2	UEPPX	UEPLX	12.47										
	2-Wire Voice Grade Loop (SL 1) - Zone 3		3	UEPPX	UEPLX	19.83										
2-Wire Voice Grade Line Port Rates (BUS - PBX)																
	Line Side Unbundled Combination 2-Way PBX Trunk Port - Bus			UEPPX	UEPPC	1.79	22.14	15.25	8.45	3.91			33.67	7.88	11.17	3.91
	Line Side Unbundled Outward PBX Trunk Port - Bus			UEPPX	UEPPO	1.79	22.14	15.25	8.45	3.91			33.67	7.88	11.17	3.91
	Line Side Unbundled Incoming PBX Trunk Port - Bus			UEPPX	UEPP1	1.79	22.14	15.25	8.45	3.91			33.67	7.88	11.17	3.91
	2-Wire Voice Unbundled PBX LD Terminal Ports			UEPPX	UEPLD	1.79	22.14	15.25	8.45	3.91			33.67	7.88	11.17	3.91
	2-Wire Voice Unbundled 2-Way Combination PBX Usage Port			UEPPX	UEPXA	1.79	22.14	15.25	8.45	3.91			37.06	7.88	11.17	3.91
	2-Wire Voice Unbundled PBX Toll Terminal Hotel Ports			UEPPX	UEPXB	1.79	22.14	15.25	8.45	3.91			33.67	7.88	11.17	3.91
	2-Wire Voice Unbundled PBX LD DDD Terminals Port			UEPPX	UEPXC	1.79	22.14	15.25	8.45	3.91			33.67	7.88	11.17	3.91
	2-Wire Voice Unbundled PBX LD Terminal Switchboard Port			UEPPX	UEPXD	1.79	22.14	15.25	8.45	3.91			33.67	7.88	11.17	3.91
	2-Wire Voice Unbundled PBX LD Terminal Switchboard IDD Capable Port			UEPPX	UEPXE	1.79	22.14	15.25	8.45	3.91			33.67	7.88	11.17	3.91
	2-Wire Voice Unbundled 2-Way PBX Hotel/Hospital Economy Administrative Calling Port			UEPPX	UEPXL	1.79	22.14	15.25	8.45	3.91			33.67	7.88	11.17	3.91
	2-Wire Voice Unbundled 2-Way PBX Hotel/Hospital Economy Room Calling Port			UEPPX	UEPXM	1.79	22.14	15.25	8.45	3.91			33.67	7.88	11.17	3.91
	2-Wire Voice Unbundled 1-Way Outgoing PBX Hotel/Hospital Discount Room Calling Port			UEPPX	UEPXO	1.79	22.14	15.25	8.45	3.91			33.67	7.88	11.17	3.91
	2-Wire Voice Unbundled 1-Way Outgoing PBX Measured Port			UEPPX	UEPXS	1.79	22.14	15.25	8.45	3.91			33.67	7.88	11.17	3.91
LOCAL NUMBER PORTABILITY																
	Local Number Portability (1 per port)			UEPPX	LNPCP	3.15	0.00	0.00					33.67	7.88	11.17	3.91
FEATURES																
	All Features Offered			UEPPX	UEPVF	0.00	0.00	0.00					33.67	7.88	11.17	3.91
NONRECURRING CHARGES (NRCs) - CURRENTLY COMBINED																
	2-Wire Voice Grade Loop/ Line Port Combination (PBX) - Conversion - Switch-As-Is			UEPPX	USAC2		2.01	0.3108					33.67	7.88	11.17	3.91
	2-Wire Voice Grade Loop/ Line Port Combination (PBX) - Conversion - Switch with Change			UEPPX	USACC		2.01	0.3108					33.67	7.88	11.17	3.91
ADDITIONAL NRCs																
	2-Wire Voice Grade Loop/ Line Port Combination (PBX) - Subsequent Activity			UEPPX	USAS2	0.00	0.00	0.00					33.67	7.88	11.17	3.91
	PBX Subsequent Activity - Change/Rearrange Multiline Hunt Group						14.64	14.64					19.99	19.99	19.99	19.99
2-WIRE VOICE GRADE LOOP WITH 2-WIRE ANALOG LINE COIN PORT																
UNE Port/Loop Combination Rates																
	2-Wire VG Coin Port/Loop Combo – Zone 1		1			12.69										
	2-Wire VG Coin Port/Loop Combo – Zone 2		2			14.36										
	2-Wire VG Coin Port/Loop Combo – Zone 3		3			21.72										
UNE Loop Rates																
	2-Wire Voice Grade Loop (SL1) - Zone 1		1	UEPCO	UEPLX	10.80										
	2-Wire Voice Grade Loop (SL1) - Zone 2		2	UEPCO	UEPLX	12.47										
	2-Wire Voice Grade Loop (SL1) - Zone 3		3	UEPCO	UEPLX	19.83										
2-Wire Voice Grade Line Ports (COIN)																
	2-Wire Coin 2-Way with Operator Screening (GA)			UEPCO	UEPGC	1.89	22.14	15.25	8.45	3.91			33.67	7.88	11.17	3.91
	2-Wire Coin 2-Way with Operator Screening and Blocking: 011, 900/976, 1+DDD (GA)			UEPCO	UEP2G	1.89	22.14	15.25	8.45	3.91			33.67	7.88	11.17	3.91

UNBUNDLED NETWORK ELEMENTS - Georgia													Attachment: 2		Exhibit: B	
CATEGORY	RATE ELEMENTS	Interim	Zone	BCS	USOC	RATES($)					Svc Order Submitted Elec per LSR	Svc Order Submitted Manually per LSR	Incremental Charge - Manual Svc Order vs. Electronic-1st	Incremental Charge - Manual Svc Order vs. Electronic-Add'l	Incremental Charge - Manual Svc Order vs. Electronic-Disc 1st	Incremental Charge - Manual Svc Order vs. Electronic-Disc Add'l
						Rec	Nonrecurring		Nonrecurring Disconnect		OSS Rates($)					
							First	Add'l	First	Add'l	SOMEC	SOMAN	SOMAN	SOMAN	SOMAN	SOMAN
	2-Wire Coin 2-Way with Operator Screening and 011 Blocking (GA)			UEPCO	UEPGA	1.89	22.14	15.25	8.45	3.91			33.67	7.88	11.17	3.91
	2-Wire Coin 2-Way with Operator Screening and 900/976 Blocking (GA)			UEPCO	UEPGB	1.89	22.14	15.25	8.45	3.91			33.67	7.88	11.17	3.91
	2-Wire Coin 2-Way with Operator Screening and Blocking: 900/976, 1+DDD, 011+, and Local (GA)			UEPCO	UEPCH	1.89	22.14	15.25	8.45	3.91			33.67	7.88	11.17	3.91
	2-Wire Coin Outward with Operator Screening and 011 Blocking (GA, KY, MS)			UEPCO	UEPRJ	1.89	22.14	15.25	8.45	3.91			33.67	7.88	11.17	3.91
	2-Wire Coin Outward with Operator Screening and Blocking: 900/976, 1+DDD, 011+, and Local (FL, GA)			UEPCO	UEPCQ	1.89	22.14	15.25	8.45	3.91			33.67	7.88	11.17	3.91
	2-Wire 2-Way Smartline with 900/976 (all states except LA)			UEPCO	UEPCK	1.89	22.14	15.25	8.45	3.91			33.67	7.88	11.17	3.91
	2-Wire Coin Outward Smartline with 900/976 (all states except LA)			UEPCO	UEPCR	1.89	22.14	15.25	8.45	3.91			33.67	7.88	11.17	3.91
ADDITIONAL UNE COIN PORT/LOOP (RC)																
	UNE Coin Port/Loop Combo Usage (Flat Rate)			UEPCO	URECU	3.59	0.00	0.00					33.67	7.88	11.17	3.91
LOCAL NUMBER PORTABILITY																
	Local Number Portability (1 per port)			UEPCO	LNPCX	0.35										
NONRECURRING CHARGES - CURRENTLY COMBINED																
	2-Wire Voice Grade Loop / Line Port Combination - Conversion - Switch-as-is			UEPCO	USAC2		2.01	0.3108					33.67	7.88	11.17	3.91
	2-Wire Voice Grade Loop / Line Port Combination - Conversion - Switch with change			UEPCO	USACC		2.01	0.31					33.67	7.88	11.17	3.91
ADDITIONAL NRCs																
	2-Wire Voice Grade Loop/Line Port Combination - Subsequent Activity			UEPCO	USAS2		0.00	0.00					33.67	7.88	11.17	3.91
UNBUNDLED REMOTE CALL FORWARDING - RES																
Non-Recurring																
UNBUNDLED REMOTE CALL FORWARDING - Bus																
	Unbundled Remote Call Forwarding, InterState/Intra LATA-Bus			UEPVB	UEPVJ	1.85	17.16	17.16					18.94	8.42		
Non-Recurring																
2-WIRE VOICE LOOP/ 2WIRE VOICE GRADE IO TRANSPORT/ 2-WIRE LINE PORT (RES)																
2-WIRE VOICE LOOP/ 2WIRE VOICE GRADE IO TRANSPORT/ 2-WIRE LINE PORT (BUS)																
UNBUNDLED PORT/LOOP COMBINATIONS - COST BASED RATES																
2-WIRE VOICE GRADE LOOP- BUS ONLY - WITH 2-WIRE DID TRUNK PORT																
UNE Port/Loop Combination Rates																
	2-Wire VG Loop/2-Wire DID Trunk Port Combo - UNE Zone 1		1			28.19										
	2-Wire VG Loop/2-Wire DID Trunk Port Combo - UNE Zone 2		2			30.80										
	2-Wire VG Loop/2-Wire DID Trunk Port Combo - UNE Zone 3		3			42.27										
UNE Loop Rates																
	2-Wire Analog Voice Grade Loop - (SL2) - UNE Zone 1		1	UEPPX	UECD1	16.84	104.78	78.10								
	2-Wire Analog Voice Grade Loop - (SL2) - UNE Zone 2		2	UEPPX	UECD1	19.45	104.78	78.10								
	2-Wire Analog Voice Grade Loop - (SL2) - UNE Zone 3		3	UEPPX	UECD1	30.92	104.78	104.10								
UNE Port Rate																
	Exchange Ports - 2-Wire DID Port			UEPPX	UEPD1	11.35	61.91	61.91					33.67	7.88		
NONRECURRING CHARGES - CURRENTLY COMBINED																
	2-Wire Voice Grade Loop / 2-Wire DID Trunk Port Combination - Switch-as-is			UEPPX	USAC1		93.38	93.38					33.67	7.88		
	2-Wire Voice Grade Loop / 2-Wire DID Trunk Port Conversion with BellSouth Allowable Changes			UEPPX	USA1C		93.38	93.38					33.67	7.88		
ADDITIONAL NRCs																
Telephone Number/Trunk Group Establisment Charges																
	DID Trunk Termination (One Per Port)			UEPPX	NDT	0.00	0.00	0.00								
	DID Numbers, Establish Trunk Group and Provide First Group of 20 DID Numbers			UEPPX	NDZ	0.00	0.00	0.00								
	Additional DID Numbers for each Group of 20 DID Numbers			UEPPX	ND4	0.00	0.00	0.00								
	DID Numbers, Non- consecutive DID Numbers , Per Number			UEPPX	ND5	0.00	0.00	0.00								
	Reserve Non-Consecutive DID numbers			UEPPX	ND6	0.00	0.00	0.00								
	Reserve DID Numbers			UEPPX	NDV	0.00	0.00	0.00								
LOCAL NUMBER PORTABILITY																

CATEGORY	RATE ELEMENTS	Interim	Zone	BCS	USOC	RATES($) Rec	Nonrecurring First	Nonrecurring Add'l	Nonrecurring Disconnect First	Nonrecurring Disconnect Add'l	Svc Order Submitted Elec per LSR	Svc Order Submitted Manually per LSR	Incremental Charge - Manual Svc Order vs. Electronic-1st	Incremental Charge - Manual Svc Order vs. Electronic-Add'l	Incremental Charge - Manual Svc Order vs. Electronic-Disc 1st	Incremental Charge - Manual Svc Order vs. Electronic-Disc Add'l
											OSS Rates($)					
											SOMEC	SOMAN	SOMAN	SOMAN	SOMAN	SOMAN
	Local Number Portability (1 per port)			UEPPX	LNPCP	3.15	0.00	0.00								
2-WIRE ISDN DIGITAL GRADE LOOP WITH 2-WIRE ISDN DIGITAL LINE SIDE PORT																
UNE Port/Loop Combination Rates																
	2W ISDN Digital Grade Loop/2W ISDN Digital Line Side Port - UNE Zone 1		1	UEPPB UEPPR		35.36										
	2W ISDN Digital Grade Loop/2W ISDN Digital Line Side Port - UNE Zone 2		2	UEPPB UEPPR		38.74										
	2W ISDN Digital Grade Loop/2W ISDN Digital Line Side Port - UNE Zone 3		3	UEPPB UEPPR		53.64										
UNE Loop Rates																
	2-Wire ISDN Digital Grade Loop - UNE Zone 1		1	UEPPB UEPPR	USL2X	21.89	252.32	188.77					19.99	19.99		
	2-Wire ISDN Digital Grade Loop - UNE Zone 2		2	UEPPB UEPPR	USL2X	25.27	252.32	188.77					19.99	19.99		
	2-Wire ISDN Digital Grade Loop - UNE Zone 3		3	UEPPB UEPPR	USL2X	40.17	252.32	188.77					19.99	19.99		
UNE Port Rate																
	Exchange Port - 2-Wire ISDN Line Side Port			UEPPB UEPPR	UEPPB	13.47	47.37	47.37					19.99	19.99		
NONRECURRING CHARGES - CURRENTLY COMBINED																
	2-Wire ISDN Digital Grade Loop / 2-Wire ISDN Line Side Port Combination - Conversion			UEPPB UEPPR	USACB	0.00	93.38	93.38					19.99	19.99		
ADDITIONAL NRCs																
	2-Wire ISDN Loop / 2-Wire ISDN Port Combination - Sub Actvy Non Feature/Add Trunk			UEPPB UEPPR	USASB		165.95						19.99	19.99		
LOCAL NUMBER PORTABILITY																
	Local Number Portability (1 per port)			UEPPB UEPPR	LNPCX	0.35	0.00	0.00								
B-CHANNEL USER PROFILE ACCESS:																
	CVS/CSD (DMS/5ESS)			UEPPB UEPPR	U1UCA	0.00	0.00	0.00								
	CVS (EWSD)			UEPPB UEPPR	U1UCB	0.00	0.00	0.00								
	CSD			UEPPB UEPPR	U1UCC	0.00	0.00	0.00								
B-CHANNEL AREA PLUS USER PROFILE ACCESS: (AL,KY,LA,MS SC,MS, & TN)																
USER TERMINAL PROFILE																
	User Terminal Profile (EWSD only)			UEPPB UEPPR	U1UMA	0.00	0.00	0.00								
VERTICAL FEATURES																
	All Vertical Features - One per Channel B User Profile			UEPPB UEPPR	UEPVF	0.00	0.00	0.00					19.99	19.99		
INTEROFFICE CHANNEL MILEAGE																
	Interoffice Channel mileage each, including first mile and facilities termination			UEPPB UEPPR	M1GNC	16.47	79.61	36.08					19.99	19.99		
	Interoffice Channel mileage each, additional mile			UEPPB UEPPR	M1GNM	0.0222	0.00	0.00				0.00				
4-WIRE DS1 DIGITAL LOOP WITH 4-WIRE ISDN DS1 DIGITAL TRUNK PORT																
UNE Port/Loop Combination Rates																
	4W DS1 Digital Loop/4W ISDN DS1 Digital Trunk Port - UNE Zone 1		1	UEPPP		218.69										
	4W DS1 Digital Loop/4W ISDN DS1 Digital Trunk Port - UNE Zone 2		2	UEPPP		227.29										
	4W DS1 Digital Loop/4W ISDN DS1 Digital Trunk Port - UNE Zone 3		3	UEPPP		265.09										
UNE Loop Rates																
	4-Wire DS1 Digital Loop - UNE Zone 1		1	UEPPP	USL4P	55.53	448.92	276.60					19.99	19.99		
	4-Wire DS1 Digital Loop - UNE Zone 2		2	UEPPP	USL4P	64.13	448.92	276.60					19.99	19.99		
	4-Wire DS1 Digital Loop - UNE Zone 3		3	UEPPP	USL4P	101.93	448.92	276.60					19.99	19.99		
UNE Port Rate																
	Exchange Ports - 4-Wire ISDN DS1 Port			UEPPP	UEPPP	163.16	186.80	186.80					19.99	19.99		
NONRECURRING CHARGES - CURRENTLY COMBINED																
	4-Wire DS1 Digital Loop / 4-Wire ISDN DS1 Digital Trunk Port Combination - Conversion -Switch-as-is			UEPPP	USACP	0.00	269.96	269.96					19.99	19.99		
ADDITIONAL NRCs																
	4-Wire DS1 Loop/4-W ISDN Digtl Trk Port - Subsqt Actvy-Inward/two way tel nos within Std Allowance (except NC)			UEPPP	PR7TF		0.9686									
	4-Wire DS1 Loop / 4-Wire ISDN DS1 Digital Trunk Port - Outward Tel Numbers (All States except NC)			UEPPP	PR7TO		22.75	22.75								

UNBUNDLED NETWORK ELEMENTS - Georgia													Attachment: 2		Exhibit: B	
CATEGORY	RATE ELEMENTS	Interim	Zone	BCS	USOC	RATES($)					Svc Order Submitted Elec per LSR	Svc Order Submitted Manually per LSR	Incremental Charge - Manual Svc Order vs. Electronic-1st	Incremental Charge - Manual Svc Order vs. Electronic-Add'l	Incremental Charge - Manual Svc Order vs. Electronic-Disc 1st	Incremental Charge - Manual Svc Order vs. Electronic-Disc Add'l
						Rec	Nonrecurring		Nonrecurring Disconnect		OSS Rates($)					
							First	Add'l	First	Add'l	SOMEC	SOMAN	SOMAN	SOMAN	SOMAN	SOMAN
	4-Wire DS1 Loop / 4-Wire ISDN DS1 Digital Trk Port - Subsequent Inward Tel Nos Above Std Allowance			UEPPP	PR7ZT		45.49	45.49								
LOCAL NUMBER PORTABILITY																
	Local Number Portability (1 per port)			UEPPP	LNPCN	1.75										
INTERFACE (Provsioning Only)																
	Voice/Data			UEPPP	PR71V	0.00	0.00	0.00								
	Digital Data			UEPPP	PR71D	0.00	0.00	0.00								
	Inward Data			UEPPP	PR71E	0.00	0.00	0.00								
New or Additional "B" Channel																
	New or Additional - Voice/Data B Channel			UEPPP	PR7BV	0.00	28.71						19.99	19.99		
	New or Additional - Digital Data B Channel			UEPPP	PR7BF	0.00	28.71						19.99	19.99		
	New or Additional Inward Data B Channel			UEPPP	PR7BD	0.00	28.71						19.99	19.99		
CALL TYPES																
	Inward			UEPPP	PR7C1	0.00	0.00	0.00								
	Outward			UEPPP	PR7C0	0.00	0.00	0.00								
	Two-way			UEPPP	PR7CC	0.00	0.00	0.00								
Interoffice Channel Mileage																
	Fixed Each Including First Mile			UEPPP	1LN1A	78.9223	147.07	111.75	0.00				19.99	19.99		
	Each Airline-Fractional Additional Mile			UEPPP	1LN1B	0.4523										
4-WIRE DS1 DIGITAL LOOP WITH 4-WIRE DDITS TRUNK PORT																
UNE Port/Loop Combination Rates																
	4W DS1 Digital Loop/4W DDITS Trunk Port - UNE Zone 1		1	UEPDC		176.33										
	4W DS1 Digital Loop/4W DDITS Trunk Port - UNE Zone 2		2	UEPDC		184.93										
	4W DS1 Digital Loop/4W DDITS Trunk Port - UNE Zone 3		3	UEPDC		222.73										
UNE Loop Rates																
	4-Wire DS1 Digital Loop - UNE Zone 1		1	UEPDC	USLDC	55.53	448.92	276.00					19.99	19.99		
	4-Wire DS1 Digital Loop - UNE Zone 2		2	UEPDC	USLDC	64.13	448.92	276.60					19.99	19.99		
	4-Wire DS1 Digital Loop - UNE Zone 3		3	UEPDC	USLDC	101.93	448.92	276.60					19.99	19.99		
UNE Port Rate																
	4-Wire DDITS Digital Trunk Port			UEPDC	UDD1T	120.80	89.44	52.46					19.99	19.99		
NONRECURRING CHARGES - CURRENTLY COMBINED																
	4-Wire DS1 Digital Loop / 4-Wire DDITS Trunk Port Combination - Switch-as-is			UEPDC	USAC4		269.96	269.96					19.99	19.99		
	4-Wire DS1 Digital Loop / 4-Wire DDITS Trunk Port Combination - Conversion with DS1 Changes			UEPDC	USAWA		269.96	269.96					19.99	19.99		
	4-Wire DS1 Digital Loop / 4-Wire DDITS Trunk Port Combination - Conversion with Change - Trunk			UEPDC	USAWB		269.96	269.96					19.99	19.99		
ADDITIONAL NRCs																
	4-Wire DS1 Loop / 4-Wire DDITS Trunk Port - Subsequent Service Activity Per Service Order			UEPDC	USAS4		147.47	147.47								
	4-Wire DS1 Loop / 4-Wire DDITS Trunk Port - NRC - Subsequent Channel Activation/Chan - 2-Way Trunk			UEPDC	UDTTA		28.71	28.71					19.99	19.99		
	4-Wire DS1 Loop / 4-Wire DDITS Trunk Port - Subsequent Channel Activation/Chan - 1-Way Outward Trunk			UEPDC	UDTTB		28.71	28.71					19.99	19.99		
	4-Wire DS1 Loop / 4-Wire DDITS Trunk Port - Subsqnt Channel Activation/Chan Inward Trunk w/out DID			UEPDC	UDTTC		28.71	28.71					19.99	19.99		
	4-Wire DS1 Loop / 4-Wire DDITS Trunk Port - Subsqnt Chan Activation Per Chan - Inward Trunk with DID			UEPDC	UDTTD		28.71	28.71					19.99	19.99		
	4-Wire DS1 Loop / 4-Wire DDITS Trunk Port - Subsqnt Chan Activation / Chan - 2-Way DID w User Trans			UEPDC	UDTTE		28.71	28.71					19.99	19.99		
BIPOLAR 8 ZERO SUBSTITUTION																
	B8ZS -Superframe Format			UEPDC	CCOSF		0.00	600.00								
	B8ZS - Extended Superframe Format			UEPDC	CCOEF		0.00	600.00								
Alternate Mark Inversion																
	AMI -Superframe Format			UEPDC	MCOSF		0.00	0.00								
	AMI - Extended SuperFrame Format			UEPDC	MCOPO		0.00	0.00								
Telephone Number/Trunk Group Establisment Charges																
	Telephone Number for 2-Way Trunk Group			UEPDC	UDTGX	0.00										
	Telephone Number for 1-Way Outward Trunk Group			UEPDC	UDTGY	0.00										

CATEGORY	RATE ELEMENTS	Interim	Zone	BCS	USOC	RATES($) Rec	Nonrecurring First	Nonrecurring Add'l	Nonrecurring Disconnect First	Nonrecurring Disconnect Add'l	Svc Order Submitted Elec per LSR	Svc Order Submitted Manually per LSR	Incremental Charge - Manual Svc Order vs. Electronic-1st	Incremental Charge - Manual Svc Order vs. Electronic-Add'l	Incremental Charge - Manual Svc Order vs. Electronic-Disc 1st	Incremental Charge - Manual Svc Order vs. Electronic-Disc Add'l
											OSS Rates($)					
											SOMEC	SOMAN	SOMAN	SOMAN	SOMAN	SOMAN
	Telephone Number for 1-Way Inward Trunk Group Without DID			UEPDC	UDTGZ	0.00										
	DID Numbers, Establish Trunk Group and Provide First Group of 20 DID Numbers			UEPDC	NDZ	0.00	0.00	0.00								
	DID Numbers for each Group of 20 DID Numbers			UEPDC	ND4	0.00										
	DID Numbers, Non- consecutive DID Numbers , Per Number			UEPDC	ND5	0.00										
	Reserve Non-Consecutive DID Nos.			UEPDC	ND6	0.00	0.00	0.00								
	Reserve DID Numbers			UEPDC	NDV	0.00	0.00	0.00								
	Dedicated DS1 (Interoffice Channel Mileage) - FX/FCO for 4-Wire DS1 Digital Loop with 4-Wire DDITS Trunk Port															
	Interoffice Channel Mileage - Fixed rate 0-8 miles (Facilities Termination)			UEPDC	1LNO1	78.47	147.07	111.75					19.99	19.99		
	Interoffice Channel Mileage - Additional rate per mile - 0-8 miles			UEPDC	1LNOA	0.4523	0.00	0.00								
	Interoffice Channel Mileage - Fixed rate 9-25 miles (Facilities Termination)			UEPDC	1LNO2	0.00	0.00	0.00								
	Interoffice Channel Mileage - Additional rate per mile - 9-25 miles			UEPDC	1LNOB	0.4523	0.00	0.00								
	Interoffice Channel Mileage - Fixed rate 25+ miles (Facilities Termination)			UEPDC	1LNO3	0.00	0.00	0.00								
	Interoffice Channel Mileage - Additional rate per mile - 25+ miles			UEPDC	1LNOC	0.4523	0.00	0.00								
	Local Number Portability, per DS0 Activated			UEPDC	LNPCP	3.15										
	Central Office Termininating Point			UEPDC	CTG	0.00										
	4-WIRE DS1 LOOP WITH CHANNELIZATION WITH PORT															
	System is 1 DS1 Loop, 1 D4 Channel Bank, and up to 24 Feature Activations															
	Each System can have up to 24 combinations of rates depending on type and number of ports used															
	UNE DS1 Loop															
	4-Wire DS1 Loop - UNE Zone 1		1	UEPMG	USLDC	55.53	0.00	0.00								
	4-Wire DS1 Loop - UNE Zone 2		2	UEPMG	USLDC	64.13	0.00	0.00								
	4-Wire DS1 Loop - UNE Zone 3		3	UEPMG	USLDC	101.93	0.00	0.00								
	UNE DSO Channelization Capacities (D4 Channel Bank Configurations)															
	24 DSO Channel Capacity - 1 per DS1			UEPMG	VUM24	102.64	0.00	0.00					19.99	19.99		
	48 DSO Channel Capacity - 1 per 2 DS1s			UEPMG	VUM48	205.28	0.00	0.00					19.99	19.99		
	96 DSO Channel Capacity -1per 4 DS1s			UEPMG	VUM96	410.56	0.00	0.00					19.99	19.99		
	144 DS0 Channel Capacity - 1 per 6 DS1s			UEPMG	VUM14	615.84	0.00	0.00					19.99	19.99		
	192 DS0 Channel Capacity -1 per 8 DS1s			UEPMG	VUM19	821.12	0.00	0.00					19.99	19.99		
	240 DS0 Channel Capacity - 1 per 10 DS1s			UEPMG	VUM20	1,026.40	0.00	0.00					19.99	19.99		
	288 DS0 Channel Capacity - 1 per 12 DS1s			UEPMG	VUM28	1,231.68	0.00	0.00					19.99	19.99		
	384 DS0 Channel Capacity - 1 per 16 DS1s			UEPMG	VUM38	1,642.24	0.00	0.00					19.99	19.99		
	480 DS0 Channel Capacity - 1 per 20 DS1s			UEPMG	VUM40	2,052.80	0.00	0.00					19.99	19.99		
	576 DS0 Channel Capacity -1 per 24 DS1s			UEPMG	VUM57	2,463.36	0.00	0.00					19.99	19.99		
	672 DS0 Channel Capacity - 1 per 28 DS1s			UEPMG	VUM67	2,873.92	0.00	0.00					19.99	19.99		
	Non-Recurring Charges (NRC) Associated with 4-Wire DS1 Loop with Channeliztion with Port - Conversion Charge Based on a System															
	A Minimum System configuration is One (1) DS1, One (1) D4 Channel Bank, and Up To 24 DSO Ports with Feature Activations.															
	Multiples of this configuration functioning as one are considered Add'l after the minimum system configuration is counted.															
	NRC - Conversion (Currently Combined) with or without BellSouth Allowed Changes			UEPMG	USAC4	0.00	328.35	16.52					19.99	19.99		
	System Additions at End User Locations Where 4-Wire DS1 Loop with Channelization with Port Combination Currently Exists and															
	New (Not Currently Combined) In GA, KY, LA, MS & TN Only															
	1 DS1/D4 Channel Bank - Add NRC for each Port and Assoc Fea Activation - New GA, LA, KY, MS, &TN Only			UEPMG	VUMD4	0.00	738.61	462.53	144.05	17.09			19.99	19.99		
	Bipolar 8 Zero Substitution															
	Clear Channel Capability Format, superframe - Subsequent Activity Only			UEPMG	CCOSF	0.00	0.00	600.00								
	Clear Channel Capability Format - Extended Superframe - Subsequent Activity Only			UEPMG	CCOEF	0.00	0.00	600.00								
	Alternate Mark Inversion (AMI)															
	Superframe Format			UEPMG	MCOSF	0.00	0.00	0.00								
	Extended Superframe Format			UEPMG	MCOPO	0.00	0.00	0.00								
	Exchange Ports Associated with 4-Wire DS1 Loop with Channelization with Port															

CATEGORY	RATE ELEMENTS	Interim	Zone	BCS	USOC	RATES($)					Svc Order Submitted Elec per LSR	Svc Order Submitted Manually per LSR	Incremental Charge - Manual Svc Order vs. Electronic-1st	Incremental Charge - Manual Svc Order vs. Electronic-Add'l	Incremental Charge - Manual Svc Order vs. Electronic-Disc 1st	Incremental Charge - Manual Svc Order vs. Electronic-Disc Add'l
						Rec	Nonrecurring		Nonrecurring Disconnect		OSS Rates($)					
							First	Add'l	First	Add'l	SOMEC	SOMAN	SOMAN	SOMAN	SOMAN	SOMAN
	Exchange Ports															
	Line Side Combination Channelized PBX Trunk Port - Business			UEPPX	UEPCX	1.79	0.00	0.00	0.00	0.00			33.67	7.88		
	Line Side Outward Channelized PBX Trunk Port - Business			UEPPX	UEPOX	1.79	0.00	0.00	0.00	0.00			33.67	7.88		
	Line Side Inward Only Channelized PBX Trunk Port without DID			UEPPX	UEP1X	1.79	0.00	0.00	0.00	0.00			33.67	7.88		
	2-Wire Trunk Side Unbundled Channelized DID Trunk Port			UEPPX	UEPDM	11.35	0.00	0.00	0.00	0.00			33.67	7.88		
	Feature Activations - Unbundled Loop Concentration															
	Feature (Service) Activation for each Line Side Port Terminated in D4 Bank			UEPPX	1PQWM	0.62	25.09	13.25	3.99	3.97			33.67	7.88		
	Feature (Service) Activation for each Trunk Side Port Terminated in D4 Bank			UEPPX	1PQWU	0.62	77.21	18.20	56.49	11.04			33.67	7.88		
	Telephone Number/ Group Establishment Charges for DID Service															
	DID Trunk Termination (1 per Port)			UEPPX	NDT	0.00	0.00	0.00								
	Estab Trk Grp and Provide 1st 20 DID Nos. (FL,GA, NC,& SC)			UEPPX	NDZ	0.00	0.00	0.00								
	DID Numbers - groups of 20 - Valid all States			UEPPX	ND4	0.00	0.00	0.00								
	Non-Consecutive DID Numbers - per number			UEPPX	ND5	0.00	0.00	0.00								
	Reserve Non-Consecutive DID Numbers			UEPPX	ND6	0.00	0.00	0.00								
	Reserve DID Numbers			UEPPX	NDV	0.00	0.00	0.00								
	Local Number Portability															
	Local Number Portability - 1 per port			UEPPX	LNPCP	3.15	0.00	0.00								
	FEATURES - Vertical and Optional															
	Local Switching Features Offered with Line Side Ports Only															
	All Features Available			UEPPX	UEPVF	0.00	0.00	0.00								
UNBUNDLED PORT LOOP COMBINATIONS - MARKET RATES																
	Market Rates shall apply where BellSouth is not required to provide unbundled local switching or switch ports per FCC and/or State Commission rules.															
	These scenarios include:															
	1. Unbundled port/loop combinations that are Not Currently Combined in Alabama, Florida and North Carolina.															
	2. Unbundled port/loop combinations that are Currently Combined or Not Currently Combined in Zone 1 of the Top 8 MSAS in BellSouth's region for end users with 4 or more DS0 equivalent lines.															
	The Top 8 MSAs in BellSouth's region are: FL (Orlando, Ft. Lauderdale, Miami); GA (Atlanta); LA (New Orleans); NC (Greensboro-Winston Salem-Highpoint/Charlotte-Gastonia-Rock Hill); TN (Nashville).															
	BellSouth currently is developing the billing capability to mechanically bill the recurring and non-recurring Market Rates in this section except for nonrecurring charges for not currently combined in AL, FL and NC. In the interim where BellSouth cannot bill Market Rates, BellSouth shall bill the rates in the Cost-Based section preceding in lieu of the Market Rates and reserves the right to true-up the billing difference.															
	The Market Rate for unbundled ports includes all available features in all states.															
	End Office and Tandem Switching Usage and Common Transport Usage rates in the Port section of this rate exhibit shall apply to all combinations of loop/port network elements except for UNE Coin Port/Loop Combinations which have a flat rate usage charge (USOC: URECU).															
	For Not Currently Combined scenarios where Market Rates apply, the Nonrecurring charges are listed in the First and Additional NRC columns for each Port USOC. For Currently Combined scenarios, the Nonrecurring charges are listed in the NRC - Currently Combined section. Additional NRCs may apply also and are categorized accordingly.															
	2-WIRE VOICE GRADE LOOP WITH 2-WIRE LINE PORT (RES)															
	UNE Port/Loop Combination Rates															
	2-Wire VG Loop/Port Combo - Zone 1		1			24.80										
	2-Wire VG Loop/Port Combo - Zone 2		2			26.47										
	2-Wire VG Loop/Port Combo - Zone 3		3			33.83										
	UNE Loop Rates															
	2-Wire Voice Grade Loop (SL1) - Zone 1		1	UEPRX	UEPLX	10.80										
	2-Wire Voice Grade Loop (SL1) - Zone 2		2	UEPRX	UEPLX	12.47										
	2-Wire Voice Grade Loop (SL1) - Zone 3		3	UEPRX	UEPLX	19.83										
	2-Wire Voice Grade Line Port (Res)															
	2-Wire voice unbundled port - residence			UEPRX	UEPRL	14.00	90.00	90.00					33.67	7.88	11.17	3.91
	2-Wire voice unbundled port with Caller ID - res			UEPRX	UEPRC	14.00	90.00	90.00					33.67	7.88	11.17	3.91
	2-Wire voice unbundled port outgoing only - res			UEPRX	UEPRO	14.00	90.00	90.00					33.67	7.88	11.17	3.91
	2-Wire voice unbundles res, low usage line port with Caller ID (LUM)			UEPRX	UEPAP	14.00	90.00	90.00					33.67	7.88	11.17	3.91
	LOCAL NUMBER PORTABILITY															
	Local Number Portability (1 per port)			UEPRX	LNPCX	0.35										
	FEATURES															
	All Features Offered			UEPRX	UEPVF	0.00	0.00	0.00					33.67	7.88	11.17	3.91
	2-Wire Voice Grade Loop / Line Port Combination - Switch-as-is			UEPRX	USAC2		41.50	41.50					33.67	7.88	11.17	3.91

CATEGORY	RATE ELEMENTS	Interim	Zone	BCS	USOC	RATES($) Rec	Nonrecurring First	Nonrecurring Add'l	Nonrecurring Disconnect First	Nonrecurring Disconnect Add'l	Svc Order Submitted Elec per LSR	Svc Order Submitted Manually per LSR	Incremental Charge - Manual Svc Order vs. Electronic- 1st	Incremental Charge - Manual Svc Order vs. Electronic- Add'l	Incremental Charge - Manual Svc Order vs. Electronic- Disc 1st	Incremental Charge - Manual Svc Order vs. Electronic- Disc Add'l
											OSS Rates($)					
											SOMEC	SOMAN	SOMAN	SOMAN	SOMAN	SOMAN
	2-Wire Voice Grade Loop / Line Port Combination - Switch with change			UEPRX	USACC		41.50	41.50					33.67	7.88	11.17	3.91
	ADDITIONAL NRCs															
	NRC - 2-Wire Voice Grade Loop/Line Port Combination - Subsequent			UEPRX	USAS2	0.00	0.00	0.00					33.67	7.88	11.17	3.91
	2-WIRE VOICE GRADE LOOP WITH 2-WIRE LINE PORT (BUS)															
	UNE Port/Loop Combination Rates															
	2-Wire VG Loop/Port Combo - Zone 1		1			24.80										
	2-Wire VG Loop/Port Combo - Zone 2		2			26.47										
	2-Wire VG Loop/Port Combo - Zone 3		3			33.83										
	UNE Loop Rates															
	2-Wire Voice Grade Loop (SL1) - Zone 1		1	UEPBX	UEPLX	10.80										
	2-Wire Voice Grade Loop (SL1) - Zone 2		2	UEPBX	UEPLX	12.47										
	2-Wire Voice Grade Loop (SL1) - Zone 3		3	UEPBX	UEPLX	19.83										
	2-Wire Voice Grade Line Port (Bus)															
	2-Wire voice unbundled port without Caller ID - bus			UEPBX	UEPBL	14.00	90.00	90.00					33.67	7.88	11.17	3.91
	2-Wire voice unbundled port with Caller + E484 ID - bus			UEPBX	UEPBC	14.00	90.00	90.00					33.67	7.88	11.17	3.91
	2-Wire voice unbundled port outgoing only - bus			UEPBX	UEPBO	14.00	90.00	90.00					33.67	7.88	11.17	3.91
	LOCAL NUMBER PORTABILITY															
	Local Number Portability (1 per port)			UEPBX	LNPCX	0.35										
	FEATURES															
	All Features Offered			UEPBX	UEPVF	0.00	0.00	0.00					33.67	7.88	11.17	3.91
	NONRECURRING CHARGES - CURRENTLY COMBINED															
	2-Wire Voice Grade Loop / Line Port Combination - Switch-as-is			UEPBX	USAC2		41.50	41.50					33.67	7.88	11.17	3.91
	2-Wire Voice Grade Loop / Line Port Combination - Switch with change			UEPBX	USACC		41.50	41.50					33.67	7.88	11.17	3.91
	ADDITIONAL NRCs															
	NRC - 2-Wire Voice Grade Loop/Line Port Combination - Subsequent			UEPBX	USAS2		0.00	0.00					33.67	7.88	11.17	3.91
	2-WIRE VOICE GRADE LOOP WITH 2-WIRE LINE PORT (RES - PBX)															
	UNE Port/Loop Combination Rates															
	2-Wire VG Loop/Port Combo - Zone 1		1			24.80										
	2-Wire VG Loop/Port Combo - Zone 2		2			26.47										
	2-Wire VG Loop/Port Combo - Zone 3		3			33.83										
	UNE Loop Rates															
	2-Wire Voice Grade Loop (SL1) - Zone 1		1	UEPRG	UEPLX	10.80										
	2-Wire Voice Grade Loop (SL1) - Zone 2		2	UEPRG	UEPLX	12.47										
	2-Wire Voice Grade Loop (SL1) - Zone 3		3	UEPRG	UEPLX	19.83										
	2-Wire Voice Grade Line Port Rates (RES - PBX)															
	2-Wire VG Unbundled Combination 2-Way PBX Trunk Port - Res			UEPRG	UEPRD	14.00	90.00	90.00					33.67	7.88	11.17	3.91
	LOCAL NUMBER PORTABILITY															
	Local Number Portability (1 per port)			UEPRG	LNPCP	3.15	0.00	0.00								
	FEATURES															
	All Features Offered			UEPRG	UEPVF	0.00	0.00	0.00					33.67	7.88	11.17	3.91
	NONRECURRING CHARGES - CURRENTLY COMBINED															
	2-Wire Voice Grade Loop/ Line Port Combination - Switch-As-Is			UEPRG	USAC2		41.50	41.50					33.67	7.88	11.17	3.91
	2-Wire Voice Grade Loop/ Line Port Combination - Switch with Change			UEPRG	USACC		41.50	41.50					33.67	7.88	11.17	3.91
	ADDITIONAL NRCs															
	2 Wire Loop/Line Side Port Combination - Non feature - Subsequent Activity- Nonrecurring						0.00	0.00					33.67	7.88	11.17	3.91
	PBX Subsequent Activity - Change/Rearrange Multiline Hunt Group						14.64	14.64					19.99	19.99	19.99	19.99
	2-WIRE VOICE GRADE LOOP WITH 2-WIRE LINE PORT (BUS - PBX)															
	UNE Port/Loop Combination Rates															
	2-Wire VG Loop/Port Combo - Zone 1		1			24.80										

CATEGORY	RATE ELEMENTS	Interim	Zone	BCS	USOC	RATES($) Rec	Nonrecurring First	Nonrecurring Add'l	Nonrecurring Disconnect First	Nonrecurring Disconnect Add'l	Svc Order Submitted Elec per LSR	Svc Order Submitted Manually per LSR	Incremental Charge - Manual Svc Order vs. Electronic-1st	Incremental Charge - Manual Svc Order vs. Electronic-Add'l	Incremental Charge - Manual Svc Order vs. Electronic-Disc 1st	Incremental Charge - Manual Svc Order vs. Electronic-Disc Add'l
											OSS Rates($)					
											SOMEC	SOMAN	SOMAN	SOMAN	SOMAN	SOMAN
	2-Wire VG Loop/Port Combo - Zone 2		2			26.47										
	2-Wire VG Loop/Port Combo - Zone 3		3			33.83										
UNE Loop Rates																
	2-Wire Voice Grade Loop (SL1) - Zone 1		1	UEPPX	UEPLX	10.80										
	2-Wire Voice Grade Loop (SL1) - Zone 2		2	UEPPX	UEPLX	12.47										
	2-Wire Voice Grade Loop (SL1) - Zone 3		3	UEPPX	UEPLX	19.83										
2-Wire Voice Grade Line Port Rates (BUS - PBX)																
	Line Side Unbundled Combination 2-Way PBX Trunk Port - Bus			UEPPX	UEPPC	14.00	90.00	90.00					33.67	7.88	11.17	3.91
	Line Side Unbundled Outward PBX Trunk Port - Bus			UEPPX	UEPPO	14.00	90.00	90.00					33.67	7.88	11.17	3.91
	Line Side Unbundled Incoming PBX Trunk Port - Bus			UEPPX	UEPP1	14.00	90.00	90.00					33.67	7.88	11.17	3.91
	2-Wire Voice Unbundled PBX LD Terminal Ports			UEPPX	UEPLD	14.00	90.00	90.00					33.67	7.88	11.17	3.91
	2-Wire Voice Unbundled 2-Way Combination PBX Usage Port			UEPPX	UEPXA	14.00	90.00	90.00					33.67	7.88	11.17	3.91
	2-Wire Voice Unbundled PBX Toll Terminal Hotel Ports			UEPPX	UEPXB	14.00	90.00	90.00					33.67	7.88	11.17	3.91
	2-Wire Voice Unbundled PBX LD DDD Terminals Port			UEPPX	UEPXC	14.00	90.00	90.00					33.67	7.88	11.17	3.91
	2-Wire Voice Unbundled PBX LD Terminal Switchboard Port			UEPPX	UEPXD	14.00	90.00	90.00					33.67	7.88	11.17	3.91
	2-Wire Voice Unbundled PBX LD Terminal Switchboard IDD Capable Port			UEPPX	UEPXE	14.00	90.00	90.00					33.67	7.88	11.17	3.91
	2-Wire Voice Unbundled 2-Way PBX Hotel/Hospital Economy Administrative Calling Port			UEPPX	UEPXL	14.00	90.00	90.00					33.67	7.88	11.17	3.91
	2-Wire Voice Unbundled 2-Way PBX Hotel/Hospital Economy Room Calling Port			UEPPX	UEPXM	14.00	90.00	90.00					33.67	7.88	11.17	3.91
	2-Wire Voice Unbundled 1-Way Outgoing PBX Hotel/Hospital Discount Room Calling Port			UEPPX	UEPXO	14.00	90.00	90.00					33.67	7.88	11.17	3.91
	2-Wire Voice Unbundled 1-Way Outgoing PBX Measured Port			UEPPX	UEPXS	14.00	90.00	90.00					33.67	7.88	11.17	3.91
LOCAL NUMBER PORTABILITY																
	Local Number Portability (1 per port)			UEPPX	LNPCP	3.15	0.00	0.00								
FEATURES																
	All Features Offered			UEPPX	UEPVF	0.00	0.00	0.00					33.67	7.88	11.17	3.91
NONRECURRING CHARGES - CURRENTLY COMBINED																
	2-Wire Voice Grade Loop/ Line Port Combination - Switch-As-Is			UEPPX	USAC2		41.50	41.50					33.67	7.88	11.17	3.91
	2-Wire Voice Grade Loop/ Line Port Combination - Switch with Change			UEPPX	USACC		41.50	41.50					33.67	7.88	11.17	3.91
ADDITIONAL NRCs																
	2-Wire Voice Grade Loop/ Line Port Combination - Subsequent			UEPPX	USAS2	0.00	0.00	0.00					33.67	7.88	11.17	3.91
	2 Wire Loop/Line Side Port Combination - Non feature - Subsequent Activity- Nonrecurring						0.00	0.00					33.67	7.88	11.17	3.91
	PBX Subsequent Activity - Change/Rearrange Multiline Hunt Group						14.64	14.64					19.99	19.99	19.99	19.99
2-WIRE VOICE GRADE LOOP WITH 2-WIRE ANALOG LINE COIN PORT																
UNE Port/Loop Combination Rates																
	2-Wire VG Coin Port/Loop Combo – Zone 1		1			24.80										
	2-Wire VG Coin Port/Loop Combo – Zone 2		2			26.47										
	2-Wire VG Coin Port/Loop Combo – Zone 3		3			33.83										
UNE Loop Rates																
	2-Wire Voice Grade Loop (SL1) - Zone 1		1	UEPCO	UEPLX	10.80										
	2-Wire Voice Grade Loop (SL1) - Zone 2		2	UEPCO	UEPLX	12.47										
	2-Wire Voice Grade Loop (SL1) - Zone 3		3	UEPCO	UEPLX	19.83										
2-Wire Voice Grade Line Port Rates (Coin)																
	2-Wire Coin 2-Way with Operator Screening (GA)			UEPCO	UEPGC	14.00	90.00	90.00					33.67	7.88	11.17	3.91
	2-Wire Coin 2-Way with Operator Screening and Blocking: 011, 900/976, 1+DDD (GA)			UEPCO	UEP2G	14.00	90.00	90.00					33.67	7.88	11.17	3.91
	2-Wire Coin 2-Way with Operator Screening and 011 Blocking (GA)			UEPCO	UEPGA	14.00	90.00	90.00					33.67	7.88	11.17	3.91
	2-Wire Coin 2-Way with Operator Screening and 900/976 Blocking (GA)			UEPCO	UEPGB	14.00	90.00	90.00					33.67	7.88	11.17	3.91

UNBUNDLED NETWORK ELEMENTS - Georgia													Attachment: 2		Exhibit: B	
CATEGORY	RATE ELEMENTS	Interim	Zone	BCS	USOC	RATES($)					Svc Order Submitted Elec per LSR	Svc Order Submitted Manually per LSR	Incremental Charge - Manual Svc Order vs. Electronic-1st	Incremental Charge - Manual Svc Order vs. Electronic-Add'l	Incremental Charge - Manual Svc Order vs. Electronic-Disc 1st	Incremental Charge - Manual Svc Order vs. Electronic-Disc Add'l
						Rec	Nonrecurring		Nonrecurring Disconnect		OSS Rates($)					
							First	Add'l	First	Add'l	SOMEC	SOMAN	SOMAN	SOMAN	SOMAN	SOMAN
	2-Wire Coin 2-Way with Operator Screening and Blocking: 900/976, 1+DDD, 011+,and Local (GA)			UEPCO	UEPCH	14.00	90.00	90.00					33.67	7.88	11.17	3.91
	2-Wire Coin Outward with Operator Screening and 011Blocking (GA, KY, MS)			UEPCO	UEPRJ	14.00	90.00	90.00					33.67	7.88	11.17	3.91
	2-Wire Coin Outward with Operator Screening and Blocking: 900/976, 1+DDD, 011+, and Local (FL, GA)			UEPCO	UEPCQ	14.00	90.00	90.00					33.67	7.88	11.17	3.91
LOCAL NUMBER PORTABILITY																
	Local Number Portability (1 per port)			UEPCO	LNPCX	0.35										
NONRECURRING CHARGES - CURRENTLY COMBINED																
	2-Wire Voice Grade Loop/ Line Port Combination - Switch-As-Is			UEPCO	USAC2		41.50	41.50					33.67	7.88	11.17	3.91
	2-Wire Voice Grade Loop/ Line Port Combination - Switch with Change			UEPCO	USACC		41.50	41.50					33.67	7.88	11.17	3.91
ADDITIONAL NRCs																
	2-Wire Voice Grade Loop/ Line Port Combination - Subsequent			UEPCO	USAS2		0.00	0.00					33.67	7.88	11.17	3.91
UNBUNDLED PORT/LOOP COMBINATIONS - MARKET BASED RATES																
2-WIRE VOICE GRADE LOOP- BUS ONLY - WITH 2-WIRE DID TRUNK PORT																
UNE Port/Loop Combination Rates																
	2-Wire VG Loop/2-Wire DID Trunk Port Combo - UNE Zone 1		1			99.84										
	2-Wire VG Loop/2-Wire DID Trunk Port Combo - UNE Zone 2		2			102.45										
	2-Wire VG Loop/2-Wire DID Trunk Port Combo - UNE Zone 3		3			113.92										
UNE Loop Rates																
	2-Wire Analog Voice Grade Loop - (SL2) - UNE Zone 1		1	UEPPX	UECD1	16.84	104.78	78.10								
	2-Wire Analog Voice Grade Loop - (SL2) - UNE Zone 2		2	UEPPX	UECD1	19.45	104.78	78.10								
	2-Wire Analog Voice Grade Loop - (SL2) - UNE Zone 3		3	UEPPX	UECD1	30.92	104.78	104.10								
UNE Port Rate																
	Exchange Ports - 2-Wire DID Port			UEPPX	UEPD1	83.00	850.00	75.00					33.67	7.88		
NONRECURRING CHARGES - CURRENTLY COMBINED																
	2-Wire Voice Grade Loop / 2-Wire DID Trunk Port Combination - Switch-As-Is Top 8 MSAs only			UEPPX	USAC1		850.00	75.00					33.67	7.88		
	2-Wire Voice Grade Loop / 2-Wire DID Trunk Port Conversion with BellSouth Allowable Changes Top 8 MSAs only			UEPPX	USA1C		850.00	75.00					33.67	7.88		
ADDITIONAL NRCs																
Telephone Number/Trunk Group Establisment Charges																
	DID Trunk Termination (One Per Port)			UEPPX	NDT	0.00	0.00	0.00								
	DID Numbers, Establish Trunk Group and Provide First Group of 20 DID Numbers			UEPPX	NDZ	0.00	0.00	0.00								
	Additional DID Numbers for each Group of 20 DID Numbers			UEPPX	ND4	0.00	0.00	0.00								
	DID Numbers, Non- consecutive DID Numbers , Per Number			UEPPX	ND5	0.00	0.00	0.00								
	Reserve Non-Consecutive DID numbers			UEPPX	ND6	0.00	0.00	0.00								
	Reserve DID Numbers			UEPPX	NDV	0.00	0.00	0.00								
LOCAL NUMBER PORTABILITY																
	Local Number Portability (1 per port)			UEPPX	LNPCP	3.15	0.00	0.00								
2-WIRE ISDN DIGITAL GRADE LOOP WITH 2-WIRE ISDN DIGITAL LINE SIDE PORT																
UNE Port/Loop Combination Rates																
	2W ISDN Digital Grade Loop/2W ISDN Digital Line Side Port - UNE Zone 1		1	UEPPB UEPPR		81.89										
	2W ISDN Digital Grade Loop/2W ISDN Digital Line Side Port - UNE Zone 2		2	UEPPB UEPPR		85.27										
	2W ISDN Digital Grade Loop/2W ISDN Digital Line Side Port - UNE Zone 3		3	UEPPB UEPPR		100.17										
UNE Loop Rates																
	2-Wire ISDN Digital Grade Loop - UNE Zone 1		1	UEPPB UEPPR	USL2X	21.89	252.32	188.77					19.99	19.99		
	2-Wire ISDN Digital Grade Loop - UNE Zone 2		2	UEPPB UEPPR	USL2X	25.27	252.32	188.77					19.99	19.99		
	2-Wire ISDN Digital Grade Loop - UNE Zone 3		3	UEPPB UEPPR	USL2X	40.17	252.32	188.77					19.99	19.99		
UNE Port Rate																
	Exchange Port - 2-Wire ISDN Line Side Port			UEPPB UEPPR	UEPPB	60.00	525.00	400.00					19.99	19.99		

CATEGORY	RATE ELEMENTS	Interim	Zone	BCS	USOC	RATES($) Rec	Nonrecurring First	Nonrecurring Add'l	Nonrecurring Disconnect First	Nonrecurring Disconnect Add'l	Svc Order Submitted Elec per LSR	Svc Order Submitted Manually per LSR	Incremental Charge - Manual Svc Order vs. Electronic-1st	Incremental Charge - Manual Svc Order vs. Electronic-Add'l	Incremental Charge - Manual Svc Order vs. Electronic-Disc 1st	Incremental Charge - Manual Svc Order vs. Electronic-Disc Add'l
											OSS Rates($)					
											SOMEC	SOMAN	SOMAN	SOMAN	SOMAN	SOMAN
NONRECURRING CHARGES - CURRENTLY COMBINED																
	2-Wire ISDN Digital Grade Loop / 2-Wire ISDN Line Side Port Combination - Conversion - Top 8 MSAs only			UEPPB UEPPR	USACB	0.00	215.00	215.00					19.99	19.99		
ADDITIONAL NRCs																
	2-Wire ISDN Loop / 2-Wire ISDN Port Combination - Sub Actvy - Non Feature/Add Trunk			UEPPB UEPPR	USASB		165.95						19.99	19.99		
LOCAL NUMBER PORTABILITY																
	Local Number Portability (1 per port)			UEPPB UEPPR	LNPCX	0.35	0.00	0.00								
B-CHANNEL USER PROFILE ACCESS:																
	CVS/CSD (DMS/5ESS)			UEPPB UEPPR	U1UCA	0.00	0.00	0.00								
	CVS (EWSD)			UEPPB UEPPR	U1UCB	0.00	0.00	0.00								
	CSD			UEPPB UEPPR	U1UCC	0.00	0.00	0.00								
B-CHANNEL AREA PLUS USER PROFILE ACCESS: (AL,KY,LA,MS SC,MS, & TN)																
USER TERMINAL PROFILE																
	User Terminal Profile (EWSD only)			UEPPB UEPPR	U1UMA	0.00	0.00	0.00								
VERTICAL FEATURES																
	All Vertical Features - One per Channel B User Profile			UEPPB UEPPR	UEPVF	0.00	0.00	0.00					19.99	19.99		
INTEROFFICE CHANNEL MILEAGE																
	Interoffice Channel mileage each, including first mile and facilities termination			UEPPB UEPPR	M1GNC	16.47	79.61	36.08					19.99	19.99		
	Interoffice Channel mileage each, additional mile			UEPPB UEPPR	M1GNM	0.0222	0.00	0.00								
4-WIRE DS1 DIGITAL LOOP WITH 4-WIRE ISDN DS1 DIGITAL TRUNK PORT																
UNE Port/Loop Combination Rates																
	4W DS1 Digital Loop/4W ISDN DS1 Digital Trunk Port - UNE Zone 1		1	UEPPP		955.53										
	4W DS1 Digital Loop/4W ISDN DS1 Digital Trunk Port - UNE Zone 2		2	UEPPP		964.13										
	4W DS1 Digital Loop/4W ISDN DS1 Digital Trunk Port - UNE Zone 3		3	UEPPP		1,001.93										
UNE Loop Rates																
	4-Wire DS1 Digital Loop - UNE Zone 1		1	UEPPP	USL4P	55.53	448.92	276.60					19.99	19.99		
	4-Wire DS1 Digital Loop - UNE Zone 2		2	UEPPP	USL4P	64.13	448.92	276.60					19.99	19.99		
	4-Wire DS1 Digital Loop - UNE Zone 3		3	UEPPP	USL4P	101.93	448.92	276.60					19.99	19.99		
UNE Port Rate																
	Exchange Ports - 4-Wire ISDN DS1 Port			UEPPP	UEPPP	900.00	1,200.00	1,200.00					19.99	19.99		
NONRECURRING CHARGES - CURRENTLY COMBINED																
	4-Wire DS1 Digital Loop / 4-Wire ISDN DS1 Digital Trunk Port Combination - Conversion -Switch-As-Is Top 8 MSAs only			UEPPP	USACP	0.00	925.00	925.00					19.99	19.99		
ADDITIONAL NRCs																
	4-Wire DS1 Loop/4-W ISDN Digtl Trk Port - Subsqt Actvy-Inward/two way tel nos within Std Allowance (except NC)			UEPPP	PR7TF		0.9686									
	4-Wire DS1 Loop / 4-Wire ISDN DS1 Digital Trunk Port - Outward Tel Numbers (All States except NC)			UEPPP	PR7TO		22.75	22.75								
	4-Wire DS1 Loop / 4-Wire ISDN DS1 Digital Trk Port - Subsequent Inward Tel Nos Above Std Allowance			UEPPP	PR7ZT		45.49	45.49								
LOCAL NUMBER PORTABILITY																
	Local Number Portability (1 per port)			UEPPP	LNPCN	1.75										
INTERFACE (Provsioning Only)																
	Voice/Data			UEPPP	PR71V	0.00	0.00	0.00								
	Digital Data			UEPPP	PR71D	0.00	0.00	0.00								
	Inward Data			UEPPP	PR71E	0.00	0.00	0.00								
New or Additional "B" Channel																
	New or Additional - Voice/Data B Channel			UEPPP	PR7BV	0.00	28.71						19.99	19.99		
	New or Additional - Digital Data B Channel			UEPPP	PR7BF	0.00	28.71						19.99	19.99		
	New or Additional Inward Data B Channel			UEPPP	PR7BD	0.00	28.71						19.99	19.99		
CALL TYPES																
	Inward			UEPPP	PR7C1	0.00	0.00	0.00								
	Outward			UEPPP	PR7C0	0.00	0.00	0.00								
	Two-way			UEPPP	PR7CC	0.00	0.00	0.00								

UNBUNDLED NETWORK ELEMENTS - Georgia													Attachment: 2		Exhibit: B	
CATEGORY	RATE ELEMENTS	Interim	Zone	BCS	USOC	RATES($)					Svc Order Submitted Elec per LSR	Svc Order Submitted Manually per LSR	Incremental Charge - Manual Svc Order vs. Electronic-1st	Incremental Charge - Manual Svc Order vs. Electronic-Add'l	Incremental Charge - Manual Svc Order vs. Electronic-Disc 1st	Incremental Charge - Manual Svc Order vs. Electronic-Disc Add'l
						Rec	Nonrecurring		Nonrecurring Disconnect		OSS Rates($)					
							First	Add'l	First	Add'l	SOMEC	SOMAN	SOMAN	SOMAN	SOMAN	SOMAN
	Interoffice Channel Mileage															
	Fixed Each Including First Mile			UEPPP	1LN1A	78.9223	147.07	111.75	0.00				19.99	19.99		
	Each Airline-Fractional Additional Mile			UEPPP	1LN1B	0.4523										
	4-WIRE DS1 DIGITAL LOOP WITH 4-WIRE DDITS TRUNK PORT															
	UNE Port/Loop Combination Rates															
	4W DS1 Digital Loop/4W DDITS Trunk Port - Statewide		sw	UEPDC												
	4W DS1 Digital Loop/4W DDITS Trunk Port - UNE Zone 1		1	UEPDC		176.33										
	4W DS1 Digital Loop/4W DDITS Trunk Port - UNE Zone 2		2	UEPDC		184.93										
	4W DS1 Digital Loop/4W DDITS Trunk Port - UNE Zone 3		3	UEPDC		222.73										
	4W DS1 Digital Loop/4W DDITS Trunk Port - UNE Zone 4		4	UEPDC												
	UNE Loop Rates															
	4-Wire DS1 Digital Loop - Statewide		sw	UEPDC	USLDC											
	4-Wire DS1 Digital Loop - UNE Zone 1		1	UEPDC	USLDC	55.53	448.92	276.00					19.99	19.99		
	4-Wire DS1 Digital Loop - UNE Zone 2		2	UEPDC	USLDC	64.13	448.92	276.60					19.99	19.99		
	4-Wire DS1 Digital Loop - UNE Zone 3		3	UEPDC	USLDC	101.93	448.92	276.60					19.99	19.99		
	4-Wire DS1 Digital Loop - UNE Zone 4		4	UEPDC	USLDC											
	UNE Port Rate															
	4-Wire DDITS Digital Trunk Port			UEPDC	UDD1T	750.00	1,011.43	477.87	206.70	20.70			19.99	19.99		
	NONRECURRING CHARGES - CURRENTLY COMBINED															
	4-Wire DS1 Digital Loop / 4-Wire DDITS Trunk Port Combination - Switch-As-Is Top 8 MSAs only			UEPDC	USAC4		269.96	269.96					19.99	19.99		
	4-Wire DS1 Digital Loop / 4-Wire DDITS Trunk Port Combination - Conversion with DS1 Changes Top 8 MSAs only			UEPDC	USAWA		269.96	269.96					19.99	19.99		
	4-Wire DS1 Digital Loop / 4-Wire DDITS Trunk Port Combination - Conversion with Change - Trunk Top 8 MSAs only			UEPDC	USAWB		269.96	269.96					19.99	19.99		
	ADDITIONAL NRCs															
	4-Wire DS1 Loop / 4-Wire DDITS Trunk Port - Subsequent Service Activity Per Service Order			UEPDC	USAS4		147.47	147.47								
	4-Wire DS1 Loop / 4-Wire DDITS Trunk Port - NRC - Subsequent Channel Activation/Chan - 2-Way Trunk			UEPDC	UDTTA		28.71	28.71					19.99	19.99		
	4-Wire DS1 Loop / 4-Wire DDITS Trunk Port - Subsequent Channel Activation/Chan - 1-Way Outward Trunk			UEPDC	UDTTB		28.71	28.71					19.99	19.99		
	4-Wire DS1 Loop / 4-Wire DDITS Trunk Port - Subsqnt Channel Activation/Chan Inward Trunk w/out DID			UEPDC	UDTTC		28.71	28.71					19.99	19.99		
	4-Wire DS1 Loop / 4-Wire DDITS Trunk Port - Subsqnt Chan Activation Per Chan - Inward Trunk with DID			UEPDC	UDTTD		28.71	28.71					19.99	19.99		
	4-Wire DS1 Loop / 4-Wire DDITS Trunk Port - Subsqnt Chan Activation / Chan - 2-Way DID w User Trans			UEPDC	UDTTE		28.71	28.71					19.99	19.99		
	BIPOLAR 8 ZERO SUBSTITUTION															
	B8ZS -Superframe Format			UEPDC	CCOSF		0.00	600.00								
	B8ZS - Extended Superframe Format			UEPDC	CCOEF		0.00	600.00								
	Alternate Mark Inversion															
	AMI -Superframe Format			UEPDC	MCOSF		0.00	0.00								
	AMI - Extended SuperFrame Format			UEPDC	MCOPO		0.00	0.00								
	Telephone Number/Trunk Group Establisment Charges															
	Telephone Number for 2-Way Trunk Group			UEPDC	UDTGX	0.00										
	Telephone Number for 1-Way Outward Trunk Group			UEPDC	UDTGY	0.00										
	Telephone Number for 1-Way Inward Trunk Group Without DID			UEPDC	UDTGZ	0.00										
	DID Numbers, Establish Trunk Group and Provide First Group of 20 DID Numbers			UEPDC	NDZ	0.00	0.00	0.00								
	DID Numbers for each Group of 20 DID Numbers			UEPDC	ND4	0.00										
	DID Numbers, Non- consecutive DID Numbers , Per Number			UEPDC	ND5	0.00										
	Reserve Non-Consecutive DID Nos.			UEPDC	ND6	0.00	0.00	0.00								
	Reserve DID Numbers			UEPDC	NDV	0.00	0.00	0.00								
	Dedicated DS1 (Interoffice Channel Mileage) -															
	FX/FCO for 4-Wire DS1 Digital Loop with 4-Wire DDITS Trunk Port															

CATEGORY	RATE ELEMENTS	Interim	Zone	BCS	USOC	RATES($) Rec	Nonrecurring First	Nonrecurring Add'l	Nonrecurring Disconnect First	Nonrecurring Disconnect Add'l	Svc Order Submitted Elec per LSR	Svc Order Submitted Manually per LSR	Incremental Charge - Manual Svc Order vs. Electronic-1st	Incremental Charge - Manual Svc Order vs. Electronic-Add'l	Incremental Charge - Manual Svc Order vs. Electronic-Disc 1st	Incremental Charge - Manual Svc Order vs. Electronic-Disc Add'l
											OSS Rates($)					
											SOMEC	SOMAN	SOMAN	SOMAN	SOMAN	SOMAN
	Interoffice Channel Mileage - Fixed rate 0-8 miles (Facilities Termination)			UEPDC	1LNO1	78.47	147.07	111.75					19.99	19.99		
	Interoffice Channel Mileage - Additional rate per mile - 0-8 miles			UEPDC	1LNOA	0.4523	0.00	0.00								
	Interoffice Channel Mileage - Fixed rate 9-25 miles (Facilities Termination)			UEPDC	1LNO2	0.00	0.00	0.00								
	Interoffice Channel Mileage - Additional rate per mile - 9-25 miles			UEPDC	1LNOB	0.4523	0.00	0.00								
	Interoffice Channel Mileage - Fixed rate 25+ miles (Facilities Termination)			UEPDC	1LNO3	0.00	0.00	0.00								
	Interoffice Channel Mileage - Additional rate per mile - 25+ miles			UEPDC	1LNOC	0.4523	0.00	0.00								
	Local Number Portability, per DS0 Activated			UEPDC	LNPCP	3.15										
	Central Office Termininating Point			UEPDC	CTG	0.00										
4-WIRE DS1 LOOP WITH CHANNELIZATION WITH PORT																
System is 1 DS1 Loop, 1 D4 Channel Bank, and up to 24 Feature Activations																
A system can have various rate combinations based on type and number of ports used																
UNE DS1 Loop																
	4-Wire DS1 Loop - UNE Zone 1		1	UEPMG	USLDC	55.53	0.00	0.00								
	4-Wire DS1 Loop - UNE Zone 2		2	UEPMG	USLDC	64.13	0.00	0.00								
	4-Wire DS1 Loop - UNE Zone 3		3	UEPMG	USLDC	101.93	0.00	0.00								
UNE DSO Channelization Capacities (D4 Channel Bank Configurations)																
	24 DSO Channel Capacity - 1 per DS1			UEPMG	VUM24	102.64	0.00	0.00					19.99	19.99		
	48 DSO Channel Capacity - 1 per 2 DS1s			UEPMG	VUM48	205.28	0.00	0.00					19.99	19.99		
	96 DSO Channel Capacity -1per 4 DS1s			UEPMG	VUM96	410.56	0.00	0.00					19.99	19.99		
	144 DS0 Channel Capacity - 1 per 6 DS1s			UEPMG	VUM14	615.84	0.00	0.00					19.99	19.99		
	192 DS0 Channel Capacity -1 per 8 DS1s			UEPMG	VUM19	821.12	0.00	0.00					19.99	19.99		
	240 DS0 Channel Capacity - 1 per 10 DS1s			UEPMG	VUM20	1,026.40	0.00	0.00					19.99	19.99		
	288 DS0 Channel Capacity - 1 per 12 DS1s			UEPMG	VUM28	1,231.68	0.00	0.00					19.99	19.99		
	384 DS0 Channel Capacity - 1 per 16 DS1s			UEPMG	VUM38	1,642.24	0.00	0.00					19.99	19.99		
	480 DS0 Channel Capacity - 1 per 20 DS1s			UEPMG	VUM40	2,052.80	0.00	0.00					19.99	19.99		
	576 DS0 Channel Capacity -1 per 24 DS1s			UEPMG	VUM57	2,463.36	0.00	0.00					19.99	19.99		
	672 DS0 Channel Capacity - 1 per 28 DS1s			UEPMG	VUM67	2,873.92	0.00	0.00					19.99	19.99		
Non-Recurring Charges (NRC) Associated with 4-Wire DS1 Loop with Channeliztion with Port - Conversion Charge Based on a System																
A Minimum System configuration is One (1) DS1, One (1) D4 Channel Bank, and Up To 24 DSO Ports with Feature Activations.																
Multiples of this configuration functioning as one are considered Add'l after the minimum system configuration is counted.																
	NRC - Conversion (Currently Combined) with or without BellSouth Allowed Changes - Top 8 MSAs Only			UEPMG	USAC4	0.00	450.00	50.00					19.99	19.99		
System Additions Where Currently Combined and New (Not Currently Combined)																
In Top 8 MSAs and AL, FL, and NC Only																
	1 DS1/D4 Channel Bank - Add NRC for each Port and Assoc Fea Activation -			UEPMG	VUMD4	0.00	950.00	600.00	200.00	30.00			19.99	19.99		
Bipolar 8 Zero Substitution																
	Clear Channel Capability Format, superframe - Subsequent Activity Only			UEPMG	CCOSF	0.00	0.00	600.00								
	Clear Channel Capability Format - Extended Superframe - Subsequent Activity Only			UEPMG	CCOEF	0.00	0.00	600.00								
Alternate Mark Inversion (AMI)																
	Superframe Format			UEPMG	MCOSF	0.00	0.00	0.00								
	Extended Superframe Format			UEPMG	MCOPO	0.00	0.00	0.00								
Exchange Ports Associated with 4-Wire DS1 Loop with Channelization with Port																
Exchange Ports																
	Line Side Combination Channelized PBX Trunk Port - Business			UEPPX	UEPCX	14.00	0.00	0.00	0.00	0.00			33.67	7.88		
	Line Side Outward Channelized PBX Trunk Port - Business			UEPPX	UEPOX	14.00	0.00	0.00	0.00	0.00			33.67	7.88		
	Line Side Inward Only Channelized PBX Trunk Port without DID			UEPPX	UEP1X	14.00	0.00	0.00	0.00	0.00			33.67	7.88		
	2-Wire Trunk Side Unbundled Channelized DID Trunk Port			UEPPX	UEPDM	83.00	0.00	0.00	0.00	0.00			33.67	7.88		
Feature Activations - Unbundled Loop Concentration																

CATEGORY	RATE ELEMENTS	Interim	Zone	BCS	USOC	RATES($) Rec	Nonrecurring First	Nonrecurring Add'l	Nonrecurring Disconnect First	Nonrecurring Disconnect Add'l	Svc Order Submitted Elec per LSR	Svc Order Submitted Manually per LSR	Incremental Charge - Manual Svc Order vs. Electronic-1st	Incremental Charge - Manual Svc Order vs. Electronic-Add'l	Incremental Charge - Manual Svc Order vs. Electronic-Disc 1st	Incremental Charge - Manual Svc Order vs. Electronic-Disc Add'l
											OSS Rates($)					
											SOMEC	SOMAN	SOMAN	SOMAN	SOMAN	SOMAN
	Feature (Service) Activation for each Line Side Port Terminated in D4 Bank			UEPPX	1PQWM	0.62	40.00	20.00	6.00	5.00			33.67	7.88		
	Feature (Service) Activation for each Trunk Side Port Terminated in D4 Bank			UEPPX	1PQWU	0.62	110.00	30.00	65.00	20.00			33.67	7.88		
	Telephone Number/ Group Establishment Charges for DID Service															
	DID Trunk Termination (1 per Port)			UEPPX	NDT	0.00	0.00	0.00								
	Estab Trk Grp and Provide 1st 20 DID Nos. (FL,GA, NC,& SC)			UEPPX	NDZ	0.00	0.00	0.00								
	DID Numbers - groups of 20 - Valid all States			UEPPX	ND4	0.00	0.00	0.00								
	Non-Consecutive DID Numbers - per number			UEPPX	ND5	0.00	0.00	0.00								
	Reserve Non-Consecutive DID Numbers			UEPPX	ND6	0.00	0.00	0.00								
	Reserve DID Numbers			UEPPX	NDV	0.00	0.00	0.00								
	Local Number Portability															
	Local Number Portability - 1 per port			UEPPX	LNPCP	3.15	0.00	0.00								
	FEATURES - Vertical and Optional															
	Local Switching Features Offered with Line Side Ports Only															
	All Features Available			UEPPX	UEPVF	0.00	0.00	0.00								
UNBUNDLED CENTREX PORT/LOOP COMBINATIONS - COST BASED RATES																
	1. Cost Based Rates are applied where BellSouth is required by FCC and/or State Commission rule to provide Unbundled Local Switching or Switch Ports.															
	2. Features shall apply to the Unbundled Port/Loop Combination - Cost Based Rate section in the same manner as they are applied to the Stand-Alone Unbundled Port section of this Rate Exhibit.															
	3. End Office and Tandem Switching Usage and Common Transport Usage rates in the Port section of this rate exhibit shall apply to all combinations of loop/port network elements except for UNE Coin Port/Loop Combinations.															
	For Georgia, Kentucky, Louisiana, MIssissippi and Tennessee, the recurring UNE Port and Loop charges listed apply to Currently Combined and Not Currently Combined Combos. The the first and additional Port nonrecurring charges apply to Not Currently Combined Combos for all states. In GA, KY, LA, MS and TN these nonrecurring charges are commission ordered cost based rates and in AL, FL, NC and SC these nonrecurring charges are Market Rates and are listed in the Market Rate section. For Currently Combined Combos in all other states, the nonrecurring charges shall be those identified in the Nonrecurring - Currently Combined sections.															
	5. Market Rates for Unbundled Centrex Port/Loop Combination will be negotiated on an Individual Case Basis, until further notice.															
	UNE-P CENTREX - 1AESS - (Valid in AL,FL,GA,KY,LA,MS,&TN only)															
	2-Wire VG Loop/2-Wire Voice Grade Port (Centrex) Combo															
	UNE Port/Loop Combination Rates (Non-Design)															
	2-Wire VG Loop/2-Wire Voice Grade Port (Centrex) Port Combo - Non-Design		1	UEP91		12.59										
	2-Wire VG Loop/2-Wire Voice Grade Port (Centrex)Port Combo - Non-Design		2	UEP91		14.26										
	2-Wire VG Loop/2-Wire Voice Grade Port (Centrex)Port Combo - Non-Design		3	UEP91		21.62										
	UNE Port/Loop Combination Rates (Design)															
	2-Wire VG Loop/2-Wire Voice Grade Port (Centrex) Port Combo - Design		1	UEP91		18.63										
	2-Wire VG Loop/2-Wire Voice Grade Port (Centrex)Port Combo - Design		2	UEP91		21.24										
	2-Wire VG Loop/2-Wire Voice Grade Port (Centrex)Port Combo - Design		3	UEP91		32.71										
	UNE Loop Rate															
	2-Wire Voice Grade Loop (SL 1) - Zone 1		1	UEP91	UECS1	10.80										
	2-Wire Voice Grade Loop (SL 1) - Zone 2		2	UEP91	UECS1	12.47										
	2-Wire Voice Grade Loop (SL 1) - Zone 3		3	UEP91	UECS1	19.83										
	2-Wire Voice Grade Loop (SL 2) - Zone 1		1	UEP91	UECS2	16.84										
	2-Wire Voice Grade Loop (SL 2) - Zone 2		2	UEP91	UECS2	19.45										
	2-Wire Voice Grade Loop (SL 2) - Zone 3		3	UEP91	UECS2	30.92										
	UNE Ports															
	All States (Except North Carolina and Sout Carolina)															
	2-Wire Voice Grade Port (Centrex) Basic Local Area			UEP91	UEPYA	1.79	22.14	15.25	8.45	3.91			33.67	7.88		
	2-Wire Voice Grade Port (Centrex 800 termination)Basic Local Area			UEP91	UEPYB	1.79	22.14	15.25	8.45	3.91			33.67	7.88		
	2-Wire Voice Grade Port (Centrex with Caller ID)1Basic Local Area			UEP91	UEPYH	1.79	22.14	15.25	8.45	3.91			33.67	7.88		
	2-Wire Voice Grade Port (Centrex from diff Serving Wire Center)2 Basic Local Area			UEP91	UEPYM	1.79	22.14	15.25	8.45	3.91			33.67	7.88		
	2-Wire Voice Grade Port, Diff Serving Wire Center - 800 Service Term - Basic Local Area			UEP91	UEPYZ	1.79	22.14	15.25	8.45	3.91			33.67	7.88		

CATEGORY	RATE ELEMENTS	Interim	Zone	BCS	USOC	RATES($) Rec	Nonrecurring First	Nonrecurring Add'l	Nonrecurring Disconnect First	Nonrecurring Disconnect Add'l	Svc Order Submitted Elec per LSR	Svc Order Submitted Manually per LSR	Incremental Charge - Manual Svc Order vs. Electronic-1st	Incremental Charge - Manual Svc Order vs. Electronic-Add'l	Incremental Charge - Manual Svc Order vs. Electronic-Disc 1st	Incremental Charge - Manual Svc Order vs. Electronic-Disc Add'l
											OSS Rates($)					
											SOMEC	SOMAN	SOMAN	SOMAN	SOMAN	SOMAN
	2-Wire Voice Grade Port terminated in on Megalink or equivalent - Basic Local Area			UEP91	UEPY9	1.79	22.14	15.25	8.45	3.91			33.67	7.88		
	2-Wire Voice Grade Port Terminated on 800 Service Term - Basic Local Area			UEP91	UEPY2	1.79	22.14	15.25	8.45	3.91			33.67	7.88		
Georgia and Florida Only																
	2-Wire Voice Grade Port (Centrex)			UEP91	UEPHA	1.79	22.14	15.25	8.45	3.91			33.67	7.88		
	2-Wire Voice Grade Port (Centrex 800 termination)			UEP91	UEPHB	1.79	22.14	15.25	8.45	3.91			33.67	7.88		
	2-Wire Voice Grade Port (Centrex with Caller ID)1			UEP91	UEPHH	1.79	22.14	15.25	8.45	3.91			33.67	7.88		
	2-Wire Voice Grade Port (Centrex from diff Serving Wire Center)2			UEP91	UEPHM	1.79	22.14	15.25	8.45	3.91			33.67	7.88		
	2-Wire Voice Grade Port, Diff Serving Wire Center - 800 Service Term			UEP91	UEPHZ	1.79	22.14	15.25	8.45	3.91			33.67	7.88		
	2-Wire Voice Grade Port terminated in on Megalink or equivalent			UEP91	UEPH9	1.79	22.14	15.25	8.45	3.91			33.67	7.88		
	2-Wire Voice Grade Port Terminated on 800 Service Term			UEP91	UEPH2	1.79	22.14	15.25	8.45	3.91			33.67	7.88		
Local Switching																
	Centrex Intercom Funtionality, per port			UEP91	URECS	0.5554										
Local Number Portability																
	Local Number Portability (1 per port)			UEP91	LNPCC	0.35										
Features																
	All Standard Features Offered, per port			UEP91	UEPVF	0.00										
	All Select Features Offered, per port			UEP91	UEPVS	0.00	454.69									
	All Centrex Control Features Offered, per port			UEP91	UEPVC	0.00										
NARS																
	Unbundled Network Access Register - Combination			UEP91	UARCX	0.00	0.00	0.00					33.67	7.88		
	Unbundled Network Access Register - Indial			UEP91	UAR1X	0.00	0.00	0.00					33.67	7.88		
	Unbundled Network Access Register - Outdial			UEP91	UAROX	0.00	0.00	0.00					33.67	7.88		
Miscellaneous Terminations																
2-Wire Trunk Side																
	Trunk Side Terminations, each			UEP91	CENA6	11.35	61.91	61.91					33.67	7.88		
Interoffice Channel Mileage - 2-Wire																
	Interoffice Channel Facilities Termination - Voice Grade			UEP91	MIGBC	17.07										
	Interoffice Channel mileage, per mile or fraction of mile			UEP91	MIGBM	0.0222										
Feature Activations (DS0) Centrex Loops on Channelized DS1 Service																
D4 Channel Bank Feature Activations																
	Feature Activation on D-4 Channel Bank Centrex Loop Slot			UEP91	1PQWS	0.62										
	Feature Activation on D-4 Channel Bank FX line Side Loop Slot			UEP91	1PQW6	0.62										
	Feature Activation on D-4 Channel Bank FX Trunk Side Loop Slot			UEP91	1PQW7	0.62										
	Feature Activation on D-4 Channel Bank Centrex Loop Slot - Different Wire Center			UEP91	1PQWP	0.62										
	Feature Activation on D-4 Channel Bank Private Line Loop Slot			UEP91	1PQWV	0.62										
	Feature Activation on D-4 Channel Bank Tjie Line/Trunk Loop Slot			UEP91	1PQWQ	0.62										
	Feature Activation on D-4 Channel Bank WATS Loop Slot			UEP91	1PQWA	0.62										
Non-Recurring Charges (NRC) Associated with UNE-P Centrex																
	Conversion - Currently Combined Switch-As-Is with allowed changes, per port			UEP91	USAC2		2.01	0.3108					33.67	7.88		
	New Centrex Standard Common Block			UEP91	M1ACS	0.00	659.41						33.67	7.88		
	New Centrex Customized Common Block			UEP91	M1ACC	0.00	659.41						33.67	7.88		
	Secondary Block, per Block			UEP91	M2CC1	0.00	77.10						33.67	7.88		
	NAR Establishment Charge, Per Occasion			UEP91	URECA	0.00	71.88						33.67	7.88		
UNE-P CENTREX - 5ESS (Valid in All States)																
2-Wire VG Loop/2-Wire Voice Grade Port (Centrex) Combo																
UNE Port/Loop Combination Rates (Non-Design)																
	2-Wire VG Loop/2-Wire Voice Grade Port (Centrex) Port Combo - Non-Design		1	UEP95		12.59										

CATEGORY	RATE ELEMENTS	Interim	Zone	BCS	USOC	RATES($) Rec	Nonrecurring First	Nonrecurring Add'l	Nonrecurring Disconnect First	Nonrecurring Disconnect Add'l	Svc Order Submitted Elec per LSR	Svc Order Submitted Manually per LSR	Incremental Charge - Manual Svc Order vs. Electronic-1st	Incremental Charge - Manual Svc Order vs. Electronic-Add'l	Incremental Charge - Manual Svc Order vs. Electronic-Disc 1st	Incremental Charge - Manual Svc Order vs. Electronic-Disc Add'l
											OSS Rates($)					
							First	Add'l	First	Add'l	SOMEC	SOMAN	SOMAN	SOMAN	SOMAN	SOMAN
	2-Wire VG Loop/2-Wire Voice Grade Port (Centrex)Port Combo - Non-Design		2	UEP95		14.26										
	2-Wire VG Loop/2-Wire Voice Grade Port (Centrex)Port Combo - Non-Design		3	UEP95		21.62										
UNE Port/Loop Combination Rates (Design)																
	2-Wire VG Loop/2-Wire Voice Grade Port (Centrex) Port Combo - Design		1	UEP95		18.63										
	2-Wire VG Loop/2-Wire Voice Grade Port (Centrex)Port Combo - Design		2	UEP95		21.24										
	2-Wire VG Loop/2-Wire Voice Grade Port (Centrex)Port Combo - Design		3	UEP95		32.71										
UNE Loop Rate																
	2-Wire Voice Grade Loop (SL 1) - Zone 1		1	UEP95	UECS1	10.80										
	2-Wire Voice Grade Loop (SL 1) - Zone 2		2	UEP95	UECS1	12.47										
	2-Wire Voice Grade Loop (SL 1) - Zone 3		3	UEP95	UECS1	19.83										
	2-Wire Voice Grade Loop (SL 2) - Zone 1		1	UEP95	UECS2	16.84										
	2-Wire Voice Grade Loop (SL 2) - Zone 2		2	UEP95	UECS2	19.45										
	2-Wire Voice Grade Loop (SL 2) - Zone 3		3	UEP95	UECS2	30.92										
UNE Port Rate																
All States																
	2-Wire Voice Grade Port (Centrex) Basic Local Area			UEP95	UEPYA	1.79	22.14	15.25	8.45	3.91			33.67	7.88		
	2-Wire Voice Grade Port (Centrex 800 termination)			UEP95	UEPYB	1.79	22.14	15.25	8.45	3.91			33.67	7.88		
	2-Wire Voice Grade Port (Centrex with Caller ID)1Basic Local Area			UEP95	UEPYH	1.79	22.14	15.25	8.45	3.91			33.67	7.88		
	2-Wire Voice Grade Port (Centrex from diff Serving Wire Center)2 Basic Local Area			UEP95	UEPYM	1.79	22.14	15.25	8.45	3.91			33.67	7.88		
	2-Wire Voice Grade Port, Diff Serving Wire Center - 800 Service Term - Basic Local Area			UEP95	UEPYZ	1.79	22.14	15.25	8.45	3.91			33.67	7.88		
	2-Wire Voice Grade Port terminated in on Megalink or equivalent - Basic Local Area			UEP95	UEPY9	1.79	22.14	15.25	8.45	3.91			33.67	7.88		
	2-Wire Voice Grade Port Terminated on 800 Service Term - Basic Local Area			UEP95	UEPY2	1.79	22.14	15.25	8.45	3.91			33.67	7.88		
FL & GA Only																
	2-Wire Voice Grade Port (Centrex)			UEP95	UEPHA	1.79	22.14	15.25	8.45	3.91			33.67	7.88		
	2-Wire Voice Grade Port (Centrex 800 termination)			UEP95	UEPHB	1.79	22.14	15.25	8.45	3.91			33.67	7.88		
	2-Wire Voice Grade Port (Centrex with Caller ID)1			UEP95	UEPHH	1.79	22.14	15.25	8.45	3.91			33.67	7.88		
	2-Wire Voice Grade Port (Centrex from diff Serving Wire Center)2			UEP95	UEPHM	1.79	22.14	15.25	8.45	3.91			33.67	7.88		
	2-Wire Voice Grade Port, Diff Serving Wire Center - 800 Service Term			UEP95	UEPHZ	1.79	22.14	15.25	8.45	3.91			33.67	7.88		
	2-Wire Voice Grade Port terminated in on Megalink or equivalent			UEP95	UEPH9	1.79	22.14	15.25	8.45	3.91			33.67	7.88		
	2-Wire Voice Grade Port Terminated on 800 Service Term			UEP95	UEPH2	1.79	22.14	15.25	8.45	3.91			33.67	7.88		
Local Switching																
	Centrex Intercom Funtionality, per port			UEP95	URECS	0.5554										
Local Number Portability																
	Local Number Portability (1 per port)			UEP95	LNPCC	0.35										
Features																
	All Standard Features Offered, per port			UEP95	UEPVF	0.00							33.67	7.88		
	All Select Features Offered, per port			UEP95	UEPVS	0.00	454.69						33.67	7.88		
	All Centrex Control Features Offered, per port			UEP95	UEPVC	0.00							33.67	7.88		
NARS																
	Unbundled Network Access Register - Combination			UEP95	UARCX	0.00	0.00	0.00					33.67	7.88		
	Unbundled Network Access Register - Indial			UEP95	UAR1X	0.00	0.00	0.00					33.67	7.88		
	Unbundled Network Access Register - Outdial			UEP95	UAROX	0.00	0.00	0.00					33.67	7.88		
Miscellaneous Terminations																
2-Wire Trunk Side																
	Trunk Side Terminations, each			UEP95	CEND6	11.35	61.91	61.91					33.67	7.88		
4-Wire Digital (1.544 Megabits)																

CATEGORY	RATE ELEMENTS	Interim	Zone	BCS	USOC	RATES($) Rec	Nonrecurring First	Nonrecurring Add'l	Nonrecurring Disconnect First	Nonrecurring Disconnect Add'l	Svc Order Submitted Elec per LSR	Svc Order Submitted Manually per LSR	OSS Rates($) Incremental Charge - Manual Svc Order vs. Electronic-1st	OSS Rates($) Incremental Charge - Manual Svc Order vs. Electronic-Add'l	OSS Rates($) Incremental Charge - Manual Svc Order vs. Electronic-Disc 1st	OSS Rates($) Incremental Charge - Manual Svc Order vs. Electronic-Disc Add'l
											SOMEC	SOMAN	SOMAN	SOMAN	SOMAN	SOMAN
	DS1 Circuit Terminations, each			UEP95	M1HD1	120.80	89.44	52.46					33.67	7.88		
	DS0 Channels Activated, each			UEP95	M1HDO	0.00	28.71						33.67	7.88		
Interoffice Channel Mileage - 2-Wire																
	Interoffice Channel Facilities Termination			UEP95	MIGBC	17.07										
	Interoffice Channel mileage, per mile or fraction of mile			UEP95	MIGBM	0.0222										
Feature Activations (DS0) Centrex Loops on Channelized DS1 Service																
D4 Channel Bank Feature Activations																
	Feature Activation on D-4 Channel Bank Centrex Loop Slot			UEP95	1PQWS	0.62										
	Feature Activation on D-4 Channel Bank FX line Side Loop Slot			UEP95	1PQW6	0.62										
	Feature Activation on D-4 Channel Bank FX Trunk Side Loop Slot			UEP95	1PQW7	0.62										
	Feature Activation on D-4 Channel Bank Centrex Loop Slot - Different Wire Center			UEP95	1PQWP	0.62										
	Feature Activation on D-4 Channel Bank Private Line Loop Slot			UEP95	1PQWV	0.62										
	Feature Activation on D-4 Channel Bank Tjie Line/Trunk Loop Slot			UEP95	1PQWQ	0.62										
	Feature Activation on D-4 Channel Bank WATS Loop Slot			UEP95	1PQWA	0.62										
Non-Recurring Charges (NRC) Associated with UNE-P Centrex																
	NRC Conversion Currently Combined Switch-As-Is with allowed changes, per port			UEP95	USAC2		2.01	0.3108					33.67	7.88		
	New Centrex Standard Common Block			UEP95	M1ACS	0.00	659.41						33.67	7.88		
	New Centrex Customized Common Block			UEP95	M1ACC	0.00	659.41						33.67	7.88		
	NAR Establishment Charge, Per Occasion			UEP95	URECA	0.00	71.88						33.67	7.88		
UNE-P CENTREX - DMS100 (Valid in All States)																
2-Wire VG Loop/2-Wire Voice Grade Port (Centrex) Combo																
UNE Port/Loop Combination Rates (Non-Design)																
	2-Wire VG Loop/2-Wire Voice Grade Port (Centrex) Port Combo - Non-Design		1	UEP9D		12.59										
	2-Wire VG Loop/2-Wire Voice Grade Port (Centrex)Port Combo - Non-Design		2	UEP9D		14.26										
	2-Wire VG Loop/2-Wire Voice Grade Port (Centrex)Port Combo - Non-Design		3	UEP9D		21.62										
UNE Port/Loop Combination Rates (Design)																
	2-Wire VG Loop/2-Wire Voice Grade Port (Centrex) Port Combo - Design		1	UEP9D		18.63										
	2-Wire VG Loop/2-Wire Voice Grade Port (Centrex)Port Combo - Design		2	UEP9D		21.24										
	2-Wire VG Loop/2-Wire Voice Grade Port (Centrex)Port Combo - Design		3	UEP9D		32.71										
UNE Loop Rate																
	2-Wire Voice Grade Loop (SL 1) - Zone 1		1	UEP9D	UECS1	10.80										
	2-Wire Voice Grade Loop (SL 1) - Zone 2		2	UEP9D	UECS1	12.47										
	2-Wire Voice Grade Loop (SL 1) - Zone 3		3	UEP9D	UECS1	19.83										
	2-Wire Voice Grade Loop (SL 2) - Zone 1		1	UEP9D	UECS2	16.84										
	2-Wire Voice Grade Loop (SL 2) - Zone 2		2	UEP9D	UECS2	19.45										
	2-Wire Voice Grade Loop (SL 2) - Zone 3		3	UEP9D	UECS2	30.92										
UNE Port Rate																
ALL STATES																
	2-Wire Voice Grade Port (Centrex) Basic Local Area			UEP9D	UEPYA	1.79	22.14	15.25	8.45	3.91			33.67	7.88		
	2-Wire Voice Grade Port (Centrex 800 termination)Basic Local Area			UEP9D	UEPYB	1.79	22.14	15.25	8.45	3.91			33.67	7.88		
	2-Wire Voice Grade Port (Centrex / EBS-PSET)3Basic Local Area			UEP9D	UEPYC	1.79	22.14	15.25	8.45	3.91			33.67	7.88		
	2-Wire Voice Grade Port (Centrex / EBS-M5009)3Basic Local Area			UEP9D	UEPYD	1.79	22.14	15.25	8.45	3.91			33.67	7.88		
	2-Wire Voice Grade Port (Centrex / EBS-M5209))3 Basic Local Area			UEP9D	UEPYE	1.79	22.14	15.25	8.45	3.91			33.67	7.88		

CATEGORY		RATE ELEMENTS	Interim	Zone	BCS	USOC	RATES($)					Svc Order Submitted Elec per LSR	Svc Order Submitted Manually per LSR	Incremental Charge - Manual Svc Order vs. Electronic-1st	Incremental Charge - Manual Svc Order vs. Electronic-Add'l	Incremental Charge - Manual Svc Order vs. Electronic-Disc 1st	Incremental Charge - Manual Svc Order vs. Electronic-Disc Add'l
							Rec	Nonrecurring		Nonrecurring Disconnect		OSS Rates($)					
								First	Add'l	First	Add'l	SOMEC	SOMAN	SOMAN	SOMAN	SOMAN	SOMAN
		2-Wire Voice Grade Port (Centrex / EBS-M5112))3 Basic Local Area			UEP9D	UEPYF	1.79	22.14	15.25	8.45	3.91			33.67	7.88		
		2-Wire Voice Grade Port (Centrex / EBS-M5312))3Basic Local Area			UEP9D	UEPYG	1.79	22.14	15.25	8.45	3.91			33.67	7.88		
		2-Wire Voice Grade Port (Centrex / EBS-M5008))3 Basic Local Area			UEP9D	UEPYT	1.79	22.14	15.25	8.45	3.91			33.67	7.88		
		2-Wire Voice Grade Port (Centrex / EBS-M5208))3 Basic Local Area			UEP9D	UEPYU	1.79	22.14	15.25	8.45	3.91			33.67	7.88		
		2-Wire Voice Grade Port (Centrex / EBS-M5216))3 Basic Local Area			UEP9D	UEPYV	1.79	22.14	15.25	8.45	3.91			33.67	7.88		
		2-Wire Voice Grade Port (Centrex / EBS-M5316))3 Basic Local Area			UEP9D	UEPY3	1.79	22.14	15.25	8.45	3.91			33.67	7.88		
		2-Wire Voice Grade Port (Centrex with Caller ID) Basic Local Area			UEP9D	UEPYH	1.79	22.14	15.25	8.45	3.91			33.67	7.88		
		2-Wire Voice Grade Port (Centrex/Caller ID/Msg Wtg Lamp Indication))3 Basic Local Area			UEP9D	UEPYW	1.79	22.14	15.25	8.45	3.91			33.67	7.88		
		2-Wire Voice Grade Port (Centrex/Msg Wtg Lamp Indication))3 Basic Local Area			UEP9D	UEPYJ	1.79	22.14	15.25	8.45	3.91			33.67	7.88		
		2-Wire Voice Grade Port (Centrex from diff Serving Wire Center) 2 Basic Local Area			UEP9D	UEPYM	1.79	22.14	15.25	8.45	3.91			33.67	7.88		
		2-Wire Voice Grade Port (Centrex/differ SWC /EBS-PSET)2, 3 Basic Local Area			UEP9D	UEPYO	1.79	22.14	15.25	8.45	3.91			33.67	7.88		
		2-Wire Voice Grade Port (Centrex/differ SWC /EBS-M5009)2, 3 Basic Local Area			UEP9D	UEPYP	1.79	22.14	15.25	8.45	3.91			33.67	7.88		
		2-Wire Voice Grade Port (Centrex/differ SWC /EBS-5209)2, 3 Basic Local Area			UEP9D	UEPYQ	1.79	22.14	15.25	8.45	3.91			33.67	7.88		
		2-Wire Voice Grade Port (Centrex/differ SWC /EBS-M5112)2, 3 Basic Local Area			UEP9D	UEPYR	1.79	22.14	15.25	8.45	3.91			33.67	7.88		
		2-Wire Voice Grade Port (Centrex/differ SWC /EBS-M5312)2, 3 Basic Local Area			UEP9D	UEPYS	1.79	22.14	15.25	8.45	3.91			33.67	7.88		
		2-Wire Voice Grade Port (Centrex/differ SWC /EBS-M5008)2, 3 Basic Local Area			UEP9D	UEPY4	1.79	22.14	15.25	8.45	3.91			33.67	7.88		
		2-Wire Voice Grade Port (Centrex/differ SWC /EBS-M5208)2, 3 Basic Local Area			UEP9D	UEPY5	1.79	22.14	15.25	8.45	3.91			33.67	7.88		
		2-Wire Voice Grade Port (Centrex/differ SWC /EBS-M5216)2, 3 Basic Local Area			UEP9D	UEPY6	1.79	22.14	15.25	8.45	3.91			33.67	7.88		
		2-Wire Voice Grade Port (Centrex/differ SWC /EBS-M5316)2, 3 Basic Local Area			UEP9D	UEPY7	1.79	22.14	15.25	8.45	3.91			33.67	7.88		
		2-Wire Voice Grade Port, Diff Serving Wire Center - 800 Service Term			UEP9D	UEPYZ	1.79	22.14	15.25	8.45	3.91			33.67	7.88		
		2-Wire Voice Grade Port terminated in on Megalink or equivalent Basic Local Area			UEP9D	UEPY9	1.79	22.14	15.25	8.45	3.91			33.67	7.88		
		2-Wire Voice Grade Port Terminated on 800 Service Term Basic Local Area			UEP9D	UEPY2	1.79	22.14	15.25	8.45	3.91			33.67	7.88		
	FL & GA Only																
		2-Wire Voice Grade Port (Centrex)			UEP9D	UEPHA	1.79	22.14	15.25	8.45	3.91			33.67	7.88		
		2-Wire Voice Grade Port (Centrex 800 termination)			UEP9D	UEPHB	1.79	22.14	15.25	8.45	3.91			33.67	7.88		
		2-Wire Voice Grade Port (Centrex / EBS-PSET)3			UEP9D	UEPHC	1.79	22.14	15.25	8.45	3.91			33.67	7.88		
		2-Wire Voice Grade Port (Centrex / EBS-M5009)3			UEP9D	UEPHD	1.79	22.14	15.25	8.45	3.91			33.67	7.88		
		2-Wire Voice Grade Port (Centrex / EBS-M5209)3			UEP9D	UEPHE	1.79	22.14	15.25	8.45	3.91			33.67	7.88		
		2-Wire Voice Grade Port (Centrex / EBS-M5112)3			UEP9D	UEPHF	1.79	22.14	15.25	8.45	3.91			33.67	7.88		
		2-Wire Voice Grade Port (Centrex / EBS-M5312)3			UEP9D	UEPHG	1.79	22.14	15.25	8.45	3.91			33.67	7.88		
		2-Wire Voice Grade Port (Centrex / EBS-M5008)3			UEP9D	UEPHT	1.79	22.14	15.25	8.45	3.91			33.67	7.88		
		2-Wire Voice Grade Port (Centrex / EBS-M5208)3			UEP9D	UEPHU	1.79	22.14	15.25	8.45	3.91			33.67	7.88		
		2-Wire Voice Grade Port (Centrex / EBS-M5216)3			UEP9D	UEPHV	1.79	22.14	15.25	8.45	3.91			33.67	7.88		
		2-Wire Voice Grade Port (Centrex / EBS-M5316)3			UEP9D	UEPH3	1.79	22.14	15.25	8.45	3.91			33.67	7.88		
		2-Wire Voice Grade Port (Centrex with Caller ID)			UEP9D	UEPHH	1.79	22.14	15.25	8.45	3.91			33.67	7.88		
		2-Wire Voice Grade Port (Centrex/Caller ID/Msg Wtg Lamp Indication)3			UEP9D	UEPHW	1.79	22.14	15.25	8.45	3.91			33.67	7.88		

CATEGORY	RATE ELEMENTS	Interim	Zone	BCS	USOC	RATES($)					Svc Order Submitted Elec per LSR	Svc Order Submitted Manually per LSR	Incremental Charge - Manual Svc Order vs. Electronic-1st	Incremental Charge - Manual Svc Order vs. Electronic-Add'l	Incremental Charge - Manual Svc Order vs. Electronic-Disc 1st	Incremental Charge - Manual Svc Order vs. Electronic-Disc Add'l
						Rec	Nonrecurring		Nonrecurring Disconnect		OSS Rates($)					
							First	Add'l	First	Add'l	SOMEC	SOMAN	SOMAN	SOMAN	SOMAN	SOMAN
	2-Wire Voice Grade Port (Centrex/Msg Wtg Lamp Indication)3			UEP9D	UEPHJ	1.79	22.14	15.25	8.45	3.91			33.67	7.88		
	2-Wire Voice Grade Port (Centrex from diff Serving Wire Center) 2			UEP9D	UEPHM	1.79	22.14	15.25	8.45	3.91			33.67	7.88		
	2-Wire Voice Grade Port (Centrex/differ SWC /EBS-PSET)2, 3			UEP9D	UEPHO	1.79	22.14	15.25	8.45	3.91			33.67	7.88		
	2-Wire Voice Grade Port (Centrex/differ SWC /EBS-M5009)2, 3			UEP9D	UEPHP	1.79	22.14	15.25	8.45	3.91			33.67	7.88		
	2-Wire Voice Grade Port (Centrex/differ SWC /EBS-5209)2, 3			UEP9D	UEPHQ	1.79	22.14	15.25	8.45	3.91			33.67	7.88		
	2-Wire Voice Grade Port (Centrex/differ SWC /EBS-M5112)2, 3			UEP9D	UEPHR	1.79	22.14	15.25	8.45	3.91			33.67	7.88		
	2-Wire Voice Grade Port (Centrex/differ SWC /EBS-M5312)2, 3			UEP9D	UEPHS	1.79	22.14	15.25	8.45	3.91			33.67	7.88		
	2-Wire Voice Grade Port (Centrex/differ SWC /EBS-M5008)2, 3			UEP9D	UEPH4	1.79	22.14	15.25	8.45	3.91			33.67	7.88		
	2-Wire Voice Grade Port (Centrex/differ SWC /EBS-M5208)2, 3			UEP9D	UEPH5	1.79	22.14	15.25	8.45	3.91			33.67	7.88		
	2-Wire Voice Grade Port (Centrex/differ SWC /EBS-M5216)2, 3			UEP9D	UEPH6	1.79	22.14	15.25	8.45	3.91			33.67	7.88		
	2-Wire Voice Grade Port (Centrex/differ SWC /EBS-M5316)2, 3			UEP9D	UEPH7	1.79	22.14	15.25	8.45	3.91			33.67	7.88		
	2-Wire Voice Grade Port, Diff Serving Wire Center - 800 Service Term			UEP9D	UEPHZ	1.79	22.14	15.25	8.45	3.91			33.67	7.88		
	2-Wire Voice Grade Port terminated in on Megalink or equivalent			UEP9D	UEPH9	1.79	22.14	15.25	8.45	3.91			33.67	7.88		
	2-Wire Voice Grade Port Terminated on 800 Service Term			UEP9D	UEPH2	1.79	22.14	15.25	8.45	3.91			33.67	7.88		
Local Switching																
	Centrex Intercom Funtionality, per port			UEP9D	URECS	0.5554										
Local Number Portability																
	Local Number Portability (1 per port)			UEP9D	LNPCC	0.35										
Features																
	All Standard Features Offered, per port			UEP9D	UEPVF	0.00										
	All Select Features Offered, per port			UEP9D	UEPVS	0.00	454.69						33.67	7.88		
	All Centrex Control Features Offered, per port			UEP9D	UEPVC	0.00										
NARS																
	Unbundled Network Access Register - Combination			UEP9D	UARCX	0.00	0.00	0.00					33.67	7.88		
	Unbundled Network Access Register - Inward			UEP9D	UAR1X	0.00	0.00	0.00					33.67	7.88		
	Unbundled Network Access Register - Outdial			UEP9D	UAROX	0.00	0.00	0.00					33.67	7.88		
Miscellaneous Terminations																
2-Wire Trunk Side																
	Trunk Side Terminations, each			UEP9D	CEND6	11.35										
4-Wire Digital (1.544 Megabits)																
	DS1 Circuit Terminations, each			UEP9D	M1HD1	120.80	89.44	52.46					33.67	7.88		
	DS0 Channels Activiated per Channel			UEP9D	M1HDO	0.00	28.71						33.67	7.88		
Interoffice Channel Mileage - 2-Wire																
	Interoffice Channel Facilities Termination			UEP9D	MIGBC	17.07										
	Interoffice Channel mileage, per mile or fraction of mile			UEP9D	MIGBM	0.0222										
Feature Activations (DS0) Centrex Loops on Channelized DS1 Service																
D4 Channel Bank Feature Activations																
	Feature Activation on D-4 Channel Bank Centrex Loop Slot			UEP9D	1PQWS	0.62										
	Feature Activation on D-4 Channel Bank FX line Side Loop Slot			UEP9D	1PQW6	0.62										
	Feature Activation on D-4 Channel Bank FX Trunk Side Loop Slot			UEP9D	1PQW7	0.62										
	Feature Activation on D-4 Channel Bank Centrex Loop Slot - Different Wire Center			UEP9D	1PQWP	0.62										
	Feature Activation on D-4 Channel Bank Private Line Loop Slot			UEP9D	1PQWV	0.62										
	Feature Activation on D-4 Channel Bank Tjie Line/Trunk Loop Slot			UEP9D	1PQWQ	0.62										
	Feature Activation on D-4 Channel Bank WATS Loop Slot			UEP9D	1PQWA	0.62										

UNBUNDLED NETWORK ELEMENTS - Georgia													Attachment: 2		Exhibit: B	
CATEGORY	RATE ELEMENTS	Interim	Zone	BCS	USOC	RATES($)					Svc Order Submitted Elec per LSR	Svc Order Submitted Manually per LSR	Incremental Charge - Manual Svc Order vs. Electronic-1st	Incremental Charge - Manual Svc Order vs. Electronic-Add'l	Incremental Charge - Manual Svc Order vs. Electronic-Disc 1st	Incremental Charge - Manual Svc Order vs. Electronic-Disc Add'l
						Rec	Nonrecurring		Nonrecurring Disconnect		OSS Rates($)					
							First	Add'l	First	Add'l	SOMEC	SOMAN	SOMAN	SOMAN	SOMAN	SOMAN
	Non-Recurring Charges (NRC) Associated with UNE-P Centrex															
	NRC Conversion Currently Combined Switch-As-Is with allowed changes, per port			UEP9D	USAC2		2.01	0.3108					33.67	7.88		
	New Centrex Standard Common Block			UEP9D	M1ACS	0.00	659.41						33.67	7.88		
	New Centrex Customized Common Block			UEP9D	M1ACC	0.00	659.41						33.67	7.88		
	NAR Establishment Charge, Per Occasion			UEP9D	URECA	0.00	71.88						33.67	7.88		
	Centrex Intercom Funtionality, per port			UEP9E	URECS											
	4-Wire Digital (1.544 Megabits)															
	Note 1 - Required Port for Centrex Control in 1AESS, 5ESS & EWSD															
	Note 2 - Requres Interoffice Channel Mileage															
	Note 3 - Requires Specific Customer Premises Equipment															
	NOTE: Rates displaying an "R" in Interim column are interim and subject to rate true-up as set forth in General Terms and Conditions.															

CATEGORY	RATE ELEMENTS	Interim	Zone	BCS	USOC	RATES($) Rec	Nonrecurring First	Nonrecurring Add'l	Nonrecurring Disconnect First	Nonrecurring Disconnect Add'l	Svc Order Submitted Elec per LSR	Svc Order Submitted Manually per LSR	Incremental Charge - Manual Svc Order vs. Electronic- 1st	Incremental Charge - Manual Svc Order vs. Electronic- Add'l	Incremental Charge - Manual Svc Order vs. Electronic- Disc 1st	Incremental Charge - Manual Svc Order vs. Electronic- Disc Add'l
											OSS Rates($)					
											SOMEC	SOMAN	SOMAN	SOMAN	SOMAN	SOMAN
OPERATIONAL SUPPORT SYSTEMS																
	NOTE: (1) Electronic Service Order: CLEC should contact its contract negotiator if it prefers the state specific electronic service ordering charges as ordered by the State Commissions. The electronic service ordering charge currently contained in this rate exhibit is the BellSouth regional electronic service ordering charge. CLEC may elect either the state specific Commission ordered rates for the electronic service ordering charges, or CLEC may elect the regional electronic service ordering charge.															
	NOTE: (2) Any element that can be ordered electronically will be billed according to the SOMEC rate listed in this category. Please refer to BellSouth's Business Rules for Local Ordering (BBR-LO) to determine if a product can be ordered electronically. For those elements that cannot be ordered electronically at present per the BBR-LO, the listed SOMEC rate in this category reflects the charge that would be billed to a CLEC once electronic ordering capabilities come on-line for that element. Otherwise, the manual ordering charge, SOMAN, will be applied to a CLECs bill when it submits an LSR to BellSouth.															
	Manual Service Order Charge, per LSR, Disconnect Only (KY)				SOMAN				0.99							
	Electronic OSS Charge, per LSR, submitted via BST's OSS interactive interfaces (Regional)				SOMEC		3.50									
UNBUNDLED EXCHANGE ACCESS LOOP																
	2-WIRE ANALOG VOICE GRADE LOOP															
	2-Wire Analog Voice Grade Loop - Service Level 1- Zone 1		1	UEANL	UEAL2	10.56	46.66	22.57	26.65	7.65		7.86				
	2-Wire Analog Voice Grade Loop - Service Level 1- Zone 2		2	UEANL	UEAL2	15.34	46.66	22.57	26.65	7.65		7.86				
	2-Wire Analog Voice Grade Loop - Service Level 1- Zone 3		3	UEANL	UEAL2	31.11	46.66	22.57	26.65	7.65		7.86				
	Loop Testing - Basic 1st Half Hour			UEANL	URET1		46.88	46.88				7.86				
	Loop Testing - Basic Additional Half Hour			UEANL	URETA		24.16	24.16				7.86				
	CLEC to CLEC Conversion Charge Without Outside Dispatch (UVL-SL1)			UEANL	UREWO		15.78	8.94				7.86				
	Engineering Information Document (EI)			UEANL			13.49	13.49								
	Manual Order Coordination for UVL-SL1s (per loop)			UEANL	UEAMC		9.00	9.00								
	Order Coordination for Specified Conversion Time for UVL-SL1 (per LSR)			UEANL	OCOSL		23.01	23.01								
	2-WIRE Unbundled COPPER LOOP															
	2-Wire Unbundled Copper Loop - Non-Designed Zone 1	I	1	UEQ	UEQ2X	10.58	44.97	20.89	25.64	6.65		7.86				
	2 Wire Unbundled Copper Loop - Non-Designed - Zone 2	I	2	UEQ	UEQ2X	11.51	44.97	20.89	25.64	6.65		7.86				
	2 Wire Unbundled Copper Loop - Non-Designed - Zone 3	I	3	UEQ	UEQ2X	13.19	44.97	20.89	25.64	6.65		7.86				
	Order Coordination 2 Wire Unbundled Copper Loop - Non-Designed (per loop)			UEQ	USBMC		9.00	9.00								
	Engineering Information Document			UEQ			13.49	13.49								
	Loop Testing - Basic 1st Half Hour			UEQ	URET1		46.88	46.88				7.86				
	Loop Testing - Basic Additional Half Hour			UEQ	URETA		24.16	24.16				7.86				
	CLEC to CLEC Conversion Charge Without Outside Dispatch (UCL-ND)			UEQ	UREWO		14.27	7.43				7.86				
UNBUNDLED EXCHANGE ACCESS LOOP																
	2-WIRE ANALOG VOICE GRADE LOOP															
	2 Wire Analog Voice Grade Loop-Service Level 1-Line Splitting-Zone 1		1	UEPSR UEPSB	UEALS	10.56	46.66	22.57	26.65	7.65		7.86				
	2 Wire Analog Voice Grade Loop-Service Level 1-Line Splitting-Zone 1		1	UEPSR UEPSB	UEABS	10.56	46.66	22.57	26.65	7.65		7.86				
	2 Wire Analog Voice Grade Loop- Service Level 1-Line Splitting-Zone 2		2	UEPSR UEPSB	UEALS	15.34	46.66	22.57	26.65	7.65		7.86				
	2 Wire Analog Voice Grade Loop- Service Level 1-Line Splitting-Zone 2		2	UEPSR UEPSB	UEABS	15.34	46.66	22.57	26.65	7.65		7.86				
	2 Wire Analog Voice Grade Loop-Service Level 1-Line Splitting-Zone 3		3	UEPSR UEPSB	UEALS	31.11	46.66	22.57	26.65	7.65		7.86				
	2 Wire Analog Voice Grade Loop-Service Level 1-Line Splitting-Zone 3		3	UEPSR UEPSB	UEABS	31.11	46.66	22.57	26.65	7.65		7.86				
UNBUNDLED EXCHANGE ACCESS LOOP																
	2-WIRE ANALOG VOICE GRADE LOOP															
	2-Wire Analog Voice Grade Loop - Service Level 2 w/Loop or Ground Start Signaling - Zone 1		1	UEA	UEAL2	12.67	134.89	81.87	73.65	14.88		7.86				
	2-Wire Analog Voice Grade Loop - Service Level 2 w/Loop or Ground Start Signaling - Zone 2		2	UEA	UEAL2	17.45	134.89	81.87	73.65	14.88		7.86				
	2-Wire Analog Voice Grade Loop - Service Level 2 w/Loop or Ground Start Signaling - Zone 3		3	UEA	UEAL2	33.22	134.89	81.87	73.65	14.88		7.86				
	Order Coordination for Specified Conversion Time (per LSR)			UEA	OCOSL		23.01									
	2-Wire Analog Voice Grade Loop - Service Level 2 w/Reverse Battery Signaling - Zone 1		1	UEA	UEAR2	12.67	134.89	81.87	73.65	14.88		7.86				

CATEGORY	RATE ELEMENTS	Interim	Zone	BCS	USOC	RATES($) Rec	Nonrecurring First	Nonrecurring Add'l	Nonrecurring Disconnect First	Nonrecurring Disconnect Add'l	Svc Order Submitted Elec per LSR	Svc Order Submitted Manually per LSR	Incremental Charge - Manual Svc Order vs. Electronic-1st	Incremental Charge - Manual Svc Order vs. Electronic-Add'l	Incremental Charge - Manual Svc Order vs. Electronic-Disc 1st	Incremental Charge - Manual Svc Order vs. Electronic-Disc Add'l
											OSS Rates($)					
							First	Add'l	First	Add'l	SOMEC	SOMAN	SOMAN	SOMAN	SOMAN	SOMAN
	2-Wire Analog Voice Grade Loop - Service Level 2 w/Reverse Battery Signaling - Zone 2		2	UEA	UEAR2	17.45	134.89	81.87	73.65	14.88		7.86				
	2-Wire Analog Voice Grade Loop - Service Level 2 w/Reverse Battery Signaling - Zone 3		3	UEA	UEAR2	33.22	134.89	81.87	73.65	14.88		7.86				
	Order Coordination for Specified Conversion Time (per LSR)			UEA	OCOSL		23.01									
	CLEC to CLEC Conversion Charge without outside dispatch			UEA	UREWO		87.72	36.36				7.86				
4-WIRE ANALOG VOICE GRADE LOOP																
	4-Wire Analog Voice Grade Loop - Zone 1		1	UEA	UEAL4	29.26	164.11	112.36	78.91	18.66		7.86				
	4-Wire Analog Voice Grade Loop - Zone 2		2	UEA	UEAL4	34.25	164.11	112.36	78.91	18.66		7.86				
	4-Wire Analog Voice Grade Loop - Zone 3		3	UEA	UEAL4	85.06	164.11	112.36	78.91	18.66		7.86				
	Order Coordination for Specified Conversion Time (per LSR)			UEA	OCOSL		23.01									
	CLEC to CLEC Conversion Charge without outside dispatch			UEA	UREWO		87.72	36.36				7.86				
2-WIRE ISDN DIGITAL GRADE LOOP																
	2-Wire ISDN Digital Grade Loop - Zone 1		1	UDN	U1L2X	18.44	146.77	95.02	71.38	13.83		7.86				
	2-Wire ISDN Digital Grade Loop - Zone 2		2	UDN	U1L2X	25.08	146.77	95.02	71.38	13.83		7.86				
	2-Wire ISDN Digital Grade Loop - Zone 3		3	UDN	U1L2X	42.87	146.77	95.02	71.38	13.83		7.86				
	Order Coordination For Specified Conversion Time (per LSR)			UDN	OCOSL		23.01									
	CLEC to CLEC Conversion Charge without outside dispatch			UDN	UREWO		91.63	44.16				7.86				
2-WIRE Universal Digital Channel (UDC) COMPATIBLE LOOP																
	2-Wire Universal Digital Channel (UDC) Compatible Loop - Zone 1		1	UDC	UDC2X	18.44	146.77	95.02	71.38	13.83		7.86				
	2-Wire Universal Digital Channel (UDC) Compatible Loop - Zone 2		2	UDC	UDC2X	25.08	146.77	95.02	71.38	13.83		7.86				
	2-Wire Universal Digital Channel (UDC) Compatible Loop - Zone 3		3	UDC	UDC2X	42.87	146.77	95.02	71.38	13.83		7.86				
	CLEC to CLEC Conversion Charge without outside dispatch			UDC	UREWO		91.63	44.16				7.86				
2-WIRE ASYMMETRICAL DIGITAL SUBSCRIBER LINE (ADSL) COMPATIBLE LOOP																
	2 Wire Unbundled ADSL Loop including manual service inquiry & facility reservation - Zone 1		1	UAL	UAL2X	10.82	141.98	79.73	69.02	11.47		7.86				
	2 Wire Unbundled ADSL Loop including manual service inquiry & facility reservation - Zone 2		2	UAL	UAL2X	11.79	141.98	79.73	69.02	11.47		7.86				
	2 Wire Unbundled ADSL Loop including manual service inquiry & facility reservation - Zone 3		3	UAL	UAL2X	12.87	141.98	79.73	69.02	11.47		7.86				
	Order Coordination for Specified Conversion Time (per LSR)			UAL	OCOSL		23.01									
	2 Wire Unbundled ADSL Loop without manual service inquiry & facility reservaton - Zone 1		1	UAL	UAL2W	10.82	121.18	69.00	69.09	11.54		7.86				
	2 Wire Unbundled ADSL Loop without manual service inquiry & facility reservaton - Zone 2		2	UAL	UAL2W	11.79	121.18	69.00	69.09	11.54		7.86				
	2 Wire Unbundled ADSL Loop without manual service inquiry & facility reservaton - Zone 3		3	UAL	UAL2W	12.87	121.18	69.00	69.09	11.54		7.86				
	Order Coordination for Specified Conversion Time (per LSR)			UAL	OCOSL		23.01									
	CLEC to CLEC Conversion Charge without outside dispatch			UAL	UREWO		86.20	40.40				7.86				
2-WIRE HIGH BIT RATE DIGITAL SUBSCRIBER LINE (HDSL) COMPATIBLE LOOP																
	2 Wire Unbundled HDSL Loop including manual service inquiry & facility reservation - Zone 1		1	UHL	UHL2X	8.75	151.54	89.29	69.09	11.54		7.86				
	2 Wire Unbundled HDSL Loop including manual service inquiry & facility reservation - Zone 2		2	UHL	UHL2X	9.56	151.54	89.29	69.09	11.54		7.86				
	2 Wire Unbundled HDSL Loop including manual service inquiry & facility reservation - Zone 3		3	UHL	UHL2X	10.61	151.54	89.29	69.09	11.54		7.86				
	Order Coordination for Specified Conversion Time (per LSR)			UHL	OCOSL		23.01									
	2 Wire Unbundled HDSL Loop without manual service inquiry and facility reservation - Zone 1		1	UHL	UHL2W	8.75	130.74	78.56	69.09	11.54		7.86				
	2 Wire Unbundled HDSL Loop without manual service inquiry and facility reservation - Zone 2		2	UHL	UHL2W	9.56	130.74	78.56	69.09	11.54		7.86				
	2 Wire Unbundled HDSL Loop without manual service inquiry and facility reservation - Zone 3		3	UHL	UHL2W	10.61	130.74	78.56	69.09	11.54		7.86				
	Order Coordination for Specified Conversion Time (per LSR)			UHL	OCOSL		23.01									
	CLEC to CLEC Conversion Charge without outside dispatch			UHL	UREWO		86.14	40.40				7.86				
4-WIRE HIGH BIT RATE DIGITAL SUBSCRIBER LINE (HDSL) COMPATIBLE LOOP																

CATEGORY	RATE ELEMENTS	Interim	Zone	BCS	USOC	RATES($)					Svc Order Submitted Elec per LSR	Svc Order Submitted Manually per LSR	Incremental Charge - Manual Svc Order vs. Electronic-1st	Incremental Charge - Manual Svc Order vs. Electronic-Add'l	Incremental Charge - Manual Svc Order vs. Electronic-Disc 1st	Incremental Charge - Manual Svc Order vs. Electronic-Disc Add'l
						Rec	Nonrecurring		Nonrecurring Disconnect		OSS Rates($)					
							First	Add'l	First	Add'l	SOMEC	SOMAN	SOMAN	SOMAN	SOMAN	SOMAN
	4 Wire Unbundled HDSL Loop including manual service inquiry and facility reservation - Zone 1		1	UHL	UHL4X	13.95	185.75	123.50	74.95	14.69		7.86				
	4-Wire Unbundled HDSL Loop including manual service inquiry and facility reservation - Zone 2	I	2	UHL	UHL4X	15.68	185.75	123.50	74.95	14.69		7.86				
	4-Wire Unbundled HDSL Loop including manual service inquiry and facility reservation - Zone 3		3	UHL	UHL4X	16.98	185.75	123.50	74.95	14.69		7.86				
	Order Coordination for Specified Conversion Time (per LSR)			UHL	OCOSL		23.01									
	4-Wire Unbundled HDSL Loop without manual service inquiry and facility reservation - Zone 1		1	UHL	UHL4W	13.95	164.95	114.04	77.32	15.80		7.86				
	4-Wire Unbundled HDSL Loop without manual service inquiry and facility reservation - Zone 2		2	UHL	UHL4W	15.68	164.95	114.04	77.32	15.80		7.86				
	4-Wire Unbundled HDSL Loop without manual service inquiry and facility reservation - Zone 3		3	UHL	UHL4W	16.98	164.95	114.04	77.32	15.80		7.86				
	Order Coordination for Specified Conversion Time (per LSR)			UHL	OCOSL		23.01									
	CLEC to CLEC Conversion Charge without outside dispatch			UHL	UREWO		86.14	40.40				7.86				
4-WIRE DS1 DIGITAL LOOP																
	4-Wire DS1 Digital Loop - Zone 1		1	USL	USLXX	86.47	306.69	174.44	65.83	14.55		7.86				
	4-Wire DS1 Digital Loop - Zone 2		2	USL	USLXX	114.10	306.69	174.44	65.83	14.55		7.86				
	4-Wire DS1 Digital Loop - Zone 3		3	USL	USLXX	297.76	306.69	174.44	65.83	14.55		7.86				
	Order Coordination for Specified Conversion Time (per LSR)			USL	OCOSL		23.01									
	CLEC to CLEC Conversion Charge without outside dispatch			USL	UREWO		101.09	43.04								
4-WIRE 19.2, 56 OR 64 KBPS DIGITAL GRADE LOOP																
	4 Wire Unbundled Digital 19.2 Kbps		1	UDL	UDL19	27.59	157.81	106.06	78.91	18.66		7.86				
	4 Wire Unbundled Digital 19.2 Kbps		2	UDL	UDL19	32.48	157.81	106.06	78.91	18.66		7.86				
	4 Wire Unbundled Digital 19.2 Kbps		3	UDL	UDL19	36.37	157.81	106.06	78.91	18.66		7.86				
	4 Wire Unbundled Digital Loop 56 Kbps - Zone 1		1	UDL	UDL56	27.59	157.81	106.06	78.91	18.66		7.86				
	4 Wire Unbundled Digital Loop 56 Kbps - Zone 2		2	UDL	UDL56	32.48	157.81	106.06	78.91	18.66		7.86				
	4 Wire Unbundled Digital Loop 56 Kbps - Zone 3		3	UDL	UDL56	36.37	157.81	106.06	78.91	18.66		7.86				
	Order Coordination for Specified Conversion Time (per LSR)			UDL	OCOSL		23.01									
	4 Wire Unbundled Digital Loop 64 Kbps - Zone 1		1	UDL	UDL64	27.59	157.81	106.06	78.91	18.66		7.86				
	4 Wire Unbundled Digital Loop 64 Kbps - Zone 2		2	UDL	UDL64	32.48	157.81	106.06	78.91	18.66		7.86				
	4 Wire Unbundled Digital Loop 64 Kbps - Zone 3		3	UDL	UDL64	36.37	157.81	106.06	78.91	18.66		7.86				
	Order Coordination for Specified Conversion Time (per LSR)			UDL	OCOSL		23.01									
	CLEC to CLEC Conversion Charge without outside dispatch			UDL	UREWO		102.13	49.75				7.86				
2-WIRE Unbundled COPPER LOOP																
	2-Wire Unbundled Copper Loop/Short including manual service inquiry & facility reservation - Zone 1		1	UCL	UCLPB	10.82	140.95	78.70	69.09	11.54		7.86				
	2-Wire Unbundled Copper Loop/Short including manual service inquiry & facility reservation - Zone 2		2	UCL	UCLPB	11.79	140.95	78.70	69.09	11.54		7.86				
	2 Wire Unbundled Copper Loop/Short including manual service inquiry & facility reservation - Zone 3		3	UCL	UCLPB	12.87	140.95	78.70	69.09	11.54		7.86				
	Order Coordination for Unbundled Copper Loops (per loop)			UCL	UCLMC		9.00	9.00								
	2-Wire Unbundled Copper Loop/Short without manual service inquiry and facility reservation - Zone 1		1	UCL	UCLPW	10.82	120.15	67.97	69.09	11.54		7.86				
	2-Wire Unbundled Copper Loop/Short without manual service inquiry and facility reservation - Zone 2		2	UCL	UCLPW	11.79	120.15	67.97	69.09	11.54		7.86				
	2-Wire Unbundled Copper Loop/Short without manual service inquiry and facility reservation - Zone 3		3	UCL	UCLPW	12.87	120.15	67.97	69.09	11.54		7.86				
	Order Coordination for Unbundled Copper Loops (per loop)			UCL	UCLMC		9.00	9.00								
	2-Wire Unbundled Copper Loop/Long - includes manual srvc. inquiry and facility reservation - Zone 1		1	UCL	UCL2L	24.91	140.95	78.70	69.09	11.54		7.86				
	2-Wire Unbundled Copper Loop/Long - includes manual svc. inquiry and facility reservation - Zone 2		2	UCL	UCL2L	36.94	140.95	78.70	69.09	11.54		7.86				
	2-Wire Unbundled Copper Loop/Long - includes manual svc. inquiry and facility reservation - Zone 3		3	UCL	UCL2L	69.95	140.95	78.70	69.09	11.54		7.86				
	Order Coordination for Unbundled Copper Loops (per loop)			UCL	UCLMC		9.00	9.00								
	2-Wire Unbundled Copper Loop/Long - without manual service inquiry and facility reservation - Zone 1		1	UCL	UCL2W	24.91	120.15	67.97	69.09	11.54		7.86				

UNBUNDLED NETWORK ELEMENTS - Kentucky														Attachment: 2		Exhibit: B	
CATEGORY		RATE ELEMENTS	Interim	Zone	BCS	USOC	RATES($)					Svc Order Submitted Elec per LSR	Svc Order Submitted Manually per LSR	Incremental Charge - Manual Svc Order vs. Electronic-1st	Incremental Charge - Manual Svc Order vs. Electronic-Add'l	Incremental Charge - Manual Svc Order vs. Electronic-Disc 1st	Incremental Charge - Manual Svc Order vs. Electronic-Disc Add'l
							Rec	Nonrecurring		Nonrecurring Disconnect		OSS Rates($)					
								First	Add'l	First	Add'l	SOMEC	SOMAN	SOMAN	SOMAN	SOMAN	SOMAN
		2-Wire Unbundled Copper Loop/Long - without manual service inquiry and facility reservation - Zone 2		2	UCL	UCL2W	36.94	120.15	67.97	69.09	11.54		7.86				
		2-Wire Unbundled Copper Loop/Long - without manual service inquiry and facility reservation - Zone 3		3	UCL	UCL2W	69.95	120.15	67.97	69.09	11.54		7.86				
		Order Coordination for Unbundled Copper Loops (per loop)			UCL	UCLMC		9.00	9.00								
		CLEC to CLEC Conversion Charge without outside dispatch (UCL-Des)			UCL	UREWO		97.23	42.48				7.86				
	4-WIRE COPPER LOOP																
		4-Wire Copper Loop/Short - including manual service inquiry and facility reservation - Zone 1		1	UCL	UCL4S	16.92	170.31	108.06	74.95	14.69		7.86				
		4-Wire Copper Loop/Short - including manual service inquiry and facility reservation - Zone 2		2	UCL	UCL4S	17.36	170.31	108.06	74.95	14.69		7.86				
		4-Wire Copper Loop/Short - including manual service inquiry and facility reservation - Zone 3		3	UCL	UCL4S	28.10	170.31	108.06	74.95	14.69		7.86				
		Order Coordination for Unbundled Copper Loops (per loop)			UCL	UCLMC		9.00	9.00								
		4-Wire Copper Loop/Short - without manual service inquiry and facility reservation - Zone 1		1	UCL	UCL4W	16.92	149.52	97.33	74.95	14.69		7.86				
		4-Wire Copper Loop/Short - without manual service inquiry and facility reservation - Zone 2		2	UCL	UCL4W	17.36	149.52	97.33	74.95	14.69		7.86				
		4-Wire Copper Loop/Short - without manual service inquiry and facility reservation - Zone 3		3	UCL	UCL4W	28.10	149.52	97.33	74.95	14.69		7.86				
		Order Coordination for Unbundled Copper Loops (per loop)			UCL	UCLMC		9.00	9.00								
		4-Wire Unbundled Copper Loop/Long - includes manual svc. inquiry and facility reservation - Zone 1		1	UCL	UCL4L	46.91	170.31	108.06	74.95	14.69		7.86				
		4-Wire Unbundled Copper Loop/Long - includes manual svc. inquiry and facility reservation - Zone 2		2	UCL	UCL4L	45.78	170.31	108.06	74.95	14.69		7.86				
		4-Wire Unbundled Copper Loop/Long - includes manual svc. inquiry and facility reservation - Zone 3		3	UCL	UCL4L	171.34	170.31	108.06	74.95	14.69		7.86				
		Order Coordination for Unbundled Copper Loops (per loop)			UCL	UCLMC		9.00	9.00								
		4-Wire Unbundled Copper Loop/Long - without manual svc. inquiry and facility reservation - Zone 1		1	UCL	UCL4O	46.91	149.52	97.33	74.95	14.69		7.86				
		4-Wire Unbundled Copper Loop/Long - without manual svc. inquiry and facility reservation - Zone 2		2	UCL	UCL4O	45.78	149.52	97.33	74.95	14.69		7.86				
		4-Wire Unbundled Copper Loop/Long - without manual svc. inquiry and facility reservation - Zone 3		3	UCL	UCL4O	171.34	149.52	97.33	74.95	14.69		7.86				
		Order Coordination for Unbundled Copper Loops (per loop)			UCL	UCLMC		9.00	9.00								
		CLEC to CLEC Conversion Charge without outside dispatch (UCL-Des)			UCL	UREWO		97.23	42.48				7.86				
LOOP MODIFICATION																	
		Unbundled Loop Modification, Removal of Load Coils - 2 Wire pair less than or equal to 18k ft			UAL, UHL, UCL, UEQ, ULS, UEA, UEANL, UDL, UDC, UDN, UDL, USL	ULM2L		9.24	9.24				7.86				
		Unbundled Loop Modification, Removal of Load Coils - 2 wire greater than 18k ft			UCL, ULS	ULM2G		342.24	342.24				7.86				
		Unbundled Loop Modification Removal of Load Coils - 4 Wire less than or equal to 18K ft			UHL, UCL	ULM4L		9.24	9.24				7.86				
		Unbundled Loop Modification Removal of Load Coils - 4 Wire pair greater than 18k ft			UCL	ULM4G		342.24	342.24				7.86				
		Unbundled Loop Modification Removal of Bridged Tap Removal, per unbundled loop			UAL, UHL, UCL, UEQ, UEF, ULS, UEA, UEANL, UDL, UDC, UDN, UDL, USL	ULMBT		10.47	10.47				7.86				
SUB-LOOPS																	
	Sub-Loop Distribution																
		Sub-Loop - Per Cross Box Location - CLEC Feeder Facility Set-Up	I		UEANL	USBSA		207.91	207.91				7.86				

CATEGORY	RATE ELEMENTS	Interim	Zone	BCS	USOC	RATES($)					Svc Order Submitted Elec per LSR	Svc Order Submitted Manually per LSR	Incremental Charge - Manual Svc Order vs. Electronic-1st	Incremental Charge - Manual Svc Order vs. Electronic-Add'l	Incremental Charge - Manual Svc Order vs. Electronic-Disc 1st	Incremental Charge - Manual Svc Order vs. Electronic-Disc Add'l
						Rec	Nonrecurring		Nonrecurring Disconnect		OSS Rates($)					
							First	Add'l	First	Add'l	SOMEC	SOMAN	SOMAN	SOMAN	SOMAN	SOMAN
	Sub-Loop - Per Cross Box Location - Per 25 Pair Panel Set-Up	I		UEANL	USBSB		12.50	12.50				7.86				
	Sub-Loop - Per Building Equipment Room - CLEC Feeder Facility Set-Up	I		UEANL	USBSC		80.87	80.87				7.86				
	Sub-Loop - Per Building Equipment Room - Per 25 Pair Panel Set-Up	I		UEANL	USBSD		45.04	45.04				7.86				
	Sub-Loop Distribution Per 2-Wire Analog Voice Grade Loop - Zone 1	I	1	UEANL	USBN2	6.34	85.03	39.05	59.81	7.90		7.86				
	Sub-Loop Distribution Per 2-Wire Analog Voice Grade Loop - Zone 2	I	2	UEANL	USBN2	9.06	85.03	39.05	59.81	7.90		7.86				
	Sub-Loop Distribution Per 2-Wire Analog Voice Grade Loop - Zone 3	I	3	UEANL	USBN2	14.82	85.03	39.05	59.81	7.90		7.86				
	Order Coordination for Unbundled Sub-Loops, per sub-loop pair			UEANL	USBMC		9.00	9.00								
	Sub-Loop Distribution Per 4-Wire Analog Voice Grade Loop - Zone 1		1	UEANL	USBN4	8.14	102.31	56.32	65.24	10.88		7.86				
	Sub-Loop Distribution Per 4-Wire Analog Voice Grade Loop - Zone 2		2	UEANL	USBN4	8.63	102.31	56.32	65.24	10.88		7.86				
	Sub-Loop Distribution Per 4-Wire Analog Voice Grade Loop - Zone 3		3	UEANL	USBN4	25.60	102.31	56.32	65.24	10.88		7.86				
	Order Coordination for Unbundled Sub-Loops, per sub-loop pair			UEANL	USBMC		9.00	9.00								
	Sub-Loop 2-Wire Intrabuilding Network Cable (INC)	I		UEANL	USBR2	2.57	68.35	22.36	59.81	7.90		7.86				
	Order Coordination for Unbundled Sub-Loops, per sub-loop pair			UEANL	USBMC		9.00	9.00								
	Sub-Loop 4-Wire Intrabuilding Network Cable (INC)	I		UEANL	USBR4	4.98	76.49	30.51	65.24	10.88		7.86				
	Order Coordination for Unbundled Sub-Loops, per sub-loop pair			UEANL	USBMC		9.00	9.00								
	2 Wire Copper Unbundled Sub-Loop Distribution - Zone 1	I	1	UEF	UCS2X	5.45	85.03	39.05	59.81	7.90		7.86				
	2 Wire Copper Unbundled Sub-Loop Distribution - Zone 2	I	2	UEF	UCS2X	7.06	85.03	39.05	59.81	7.90		7.86				
	2 Wire Copper Unbundled Sub-Loop Distribution - Zone 3	I	3	UEF	UCS2X	9.67	85.03	39.05	59.81	7.90		7.86				
	Order Coordination for Unbundled Sub-Loops, per sub-loop pair			UEF	USBMC		9.00	9.00								
	4 Wire Copper Unbundled Sub-Loop Distribution - Zone 1	I	1	UEF	UCS4X	7.09	102.31	56.32	65.24	10.88		7.86				
	4 Wire Copper Unbundled Sub-Loop Distribution - Zone 2	I	2	UEF	UCS4X	8.66	102.31	56.32	65.24	10.88		7.86				
	4 Wire Copper Unbundled Sub-Loop Distribution - Zone 3	I	3	UEF	UCS4X	19.40	102.31	56.32	65.24	10.88		7.86				
	Order Coordination for Unbundled Sub-Loops, per sub-loop pair			UEF	USBMC		9.00	9.00								
Unbundled Sub-Loop Modification																
	Unbundled Sub-Loop Modification - 2-W Copper Dist Load Coil/Equip Removal per 2-W PR			UEF	ULM2X		5.23	5.23				7.86				
	Unbundled Sub-loop Modification - 4-W Copper Dist Load Coil/Equip Removal per 4-W PR			UEF	ULM4X		5.23	5.23				7.86				
	Unbundled Sub-loop Modification - 2-w/4-w Copper Dist Bridged Tap Removal, per PR unloaded			UEF	ULM4T		7.97	7.97				7.86				
Unbundled Network Terminating Wire (UNTW)																
	Unbundled Network Terminating Wire (UNTW) per Pair			UENTW	UENPP	0.53	23.51	23.51				7.86				
Network Interface Device (NID)																
	Network Interface Device (NID) - 1-2 lines			UENTW	UND12		73.53	49.47				7.86				
	Network Interface Device (NID) - 1-6 lines			UENTW	UND16		115.96	91.91				7.86				
	Network Interface Device Cross Connect - 2 W			UENTW	UNDC2		8.56	8.56				7.86				
	Network Interface Device Cross Connect - 4W			UENTW	UNDC4		8.56	8.56				7.86				
SUB-LOOPS																
Sub-Loop Feeder																
	USL-Feeder, DS0 Set-up per Cross Box location - CLEC Distribution Facility set-up			UEA, UDN,UCL,UDL,UDC	USBFW		207.91					7.86				
	USL Feeder - DS0 Set-up per Cross Box location - per 25 pair set-up			UEA, UDN,UCL,UDL,UDC	USBFX		12.50	12.50				7.86				
	USL Feeder DS1 Set-up at DSX location, per DS1 termination			USL	USBFZ		527.98	11.32				7.86				

CATEGORY		RATE ELEMENTS	Interim	Zone	BCS	USOC	RATES($)					Svc Order Submitted Elec per LSR	Svc Order Submitted Manually per LSR	Incremental Charge - Manual Svc Order vs. Electronic-1st	Incremental Charge - Manual Svc Order vs. Electronic-Add'l	Incremental Charge - Manual Svc Order vs. Electronic-Disc 1st	Incremental Charge - Manual Svc Order vs. Electronic-Disc Add'l
							Rec	Nonrecurring		Nonrecurring Disconnect		OSS Rates($)					
								First	Add'l	First	Add'l	SOMEC	SOMAN	SOMAN	SOMAN	SOMAN	SOMAN
		Unbundled Sub-Loop Feeder Loop, 2 Wire Ground Start, Voice Grade - Zone 1		1	UEA	USBFA	7.67	114.83	64.61	72.34	17.21		7.86				
		Unbundled Sub-Loop Feeder Loop, 2 Wire Ground-Start, Voice Grade - Zone 2		2	UEA	USBFA	9.70	114.83	64.61	72.34	17.21		7.86				
		Unbundled Sub-Loop Feeder Loop, Per 2 Wire Ground-Start, Voice Grade - Zone 3		3	UEA	USBFA	19.53	114.83	64.61	72.34	17.21		7.86				
		Order Coordination for Specified Conversion Time, per LSR			UEA	OCOSL		23.01									
		Unbundlde Sub-Loop Feeder Loop, 2 Wire Loop-Start, Voice Grade - Zone 1		1	UEA	USBFB	7.67	114.83	64.61	72.34	17.21		7.86				
		Unbundled Sub-Loop Feeder Loop, 2 Wire Loop-Start, Voice Grade - Zone 2		2	UEA	USBFB	9.70	114.83	64.61	72.34	17.21		7.86				
		Unbundled Sub-Loop Feeder Loop, 2 Wire Start Loop, Voice Grade - Zone 3		3	UEA	USBFB	19.53	114.83	64.61	72.34	17.21		7.86				
		Order Coordination for Specified Time Conversion, per LSR			UEA	OCOSL		23.01									
		Unbundled Sub-Loop Feeder Loop, 2 Wire Reverse Battery, Voice Grade - Zone 1		1	UEA	USBFC	7.67	114.83	64.61	72.34	17.21		7.86				
		Unbundled Sub-Loop Feeder Loop, 2 Wire Reverse Battery, Voice Grade - Zone 2		2	UEA	USBFC	9.70	114.83	64.61	72.34	17.21		7.86				
		Unbundled Sub-Loop Feeder Loop, 2 Wire Analog Reverse Battery, Voice Grade - Zone 3		3	UEA	USBFC	19.53	114.83	64.61	72.34	17.21		7.86				
		Order Coordination For Specified Conversion Time, per LSR			UEA	OCOSL		23.01									
		Unbundled Sub-Loop Feeder Loop, 4 Wire Ground-Start, Voice Grade - Zone 1		1	UEA	USBFD	22.82	131.73	79.98	81.82	51.56		7.86				
		Unbundled Sub-Loop Feeder Loop, 4 Wire Ground-Start, Voice Grade - Zone 2		2	UEA	USBFD	27.24	131.73	79.98	81.82	51.56		7.86				
		Unbundled Sub-Loop Feeder Loop, 4 Wire Ground Start, Voice Grade - Zone 3		3	UEA	USBFD	61.41	131.73	79.98	81.82	51.56		7.86				
		Order Coordination For Specified Conversion Time, Per LSR			UEA	OCOSL		23.01									
		Unbundled Sub-Loop Feeder Loop, 4 Wire Loop-Start, Voice Grade - Zone 1		1	UEA	USBFE	22.82	131.73	79.98	81.82	51.56		7.86				
		Unbundled Sub-Loop Feeder Loop, 4 Wire Loop-Start, Voice Grade - Zone 2		2	UEA	USBFE	27.24	131.73	79.98	81.82	51.56		7.86				
		Unbundled Sub-Loop Feeder Loop, 4 Wire Loop-Start, Voice Grade - Zone 3		3	UEA	USBFE	61.41	131.73	79.98	81.82	51.56		7.86				
		Order Coordination For Specified Conversion Time, Per LSR			UEA	OCOSL		23.01									
		Unbundled Sub-Loop Feeder Loop, 2 Wire ISDN BRI - Zone 1		1	UDN	USBFF	13.00	131.79	80.04	74.16	16.60		7.86				
		Unbundled Sub-Loop Feeder Loop, 2-Wire ISDN BRI - Zone 2		2	UDN	USBFF	16.95	131.79	80.04	74.16	16.60		7.86				
		Unbundled Sub-Loop Feeder Loop, 2-Wire ISDN BRI - Zone 3		3	UDN	USBFF	28.95	131.79	80.04	74.16	16.60		7.86				
		Order Coordination For Specified Conversion Time, Per LSR			UDN	OCOSL		23.01									
		Unbundled Sub-Loop Feeder, 2 Wire UDC (IDSL compatible)		1	UDC	USBFS	13.00	131.79	80.04	74.16	16.60		7.86				
		Unbundled Sub-Loop Feeder, 2 Wire UDC (IDSL compatible)		2	UDC	USBFS	16.95	131.79	80.04	74.16	16.60		7.86				
		Unbundled Sub-Loop Feeder, 2 Wire UDC (IDSL compatible)		3	UDC	USBFS	28.95	131.79	80.04	74.16	16.60		7.86				
		Unbundled Sub-Loop Feeder Loop, 4-Wire DS1 - Zone 1		1	USL	USBFG	62.57	125.43	73.68	81.82	21.56		7.86				
		Unbundled Sub-Loop Feeder Loop, 4-Wire DS1 - Zone 2		2	USL	USBFG	87.71	125.43	73.68	81.82	21.56		7.86				
		Unbundled Sub-Loop Feeder Loop, 4-Wire DS1 - Zone 3		3	USL	USBFG	273.33	125.43	73.68	81.82	21.56		7.86				
		Order Coordination For Specified Conversion Time, Per LSR			USL	OCOSL		23.01									
		Unbundled Sub-Loop Feeder, 2-Wire Copper Loop - Zone 1		1	UCL	USBFH	6.44	105.31	53.57	71.16	13.61		7.86				
		Unbundled Sub-Loop Feeder Loop, 2-Wire Copper Loop - Zone 2		2	UCL	USBFH	5.78	105.31	53.57	71.16	13.61		7.86				
		Unbundled Sub-Loop Feeder Loop, 2-Wire Copper Loop - Zone 3		3	UCL	USBFH	4.25	105.31	53.57	71.16	13.61		7.86				
		Order Coordination For Specified Conversion Time, per LSR			UCL	OCOSL		23.01									
		Sub-Loop Feeder - Per 4-Wire Copper Loop - Zone 1		1	UCL	USBFJ	11.33	125.55	73.80	77.12	16.86		7.86				
		Sub-Loop Feeder - Per 4-Wire Copper Loop - Zone 2		2	UCL	USBFJ	10.18	125.55	73.80	77.12	16.86		7.86				
		Sub-Loop Feeder - Per 4-Wire Copper Loop - Zone 3		3	UCL	USBFJ	10.32	125.55	73.80	77.12	16.86		7.86				
		Order Coordination For Specified Conversion Time, per LSR			UCL	OCOSL		23.01									
		Sub-Loop Feeder - Per 4-Wire 19.2 Kbps Digital Grade Loop		1	UDL	USBFN	20.78	125.43	73.68	81.82	21.56		7.86				
		Sub-Loop Feeder - Per 4-Wire 19.2 Kbps Digital Grade Loop		2	UDL	USBFN	26.41	125.43	73.68	81.82	21.56		7.86				
		Sub-Loop Feeder - Per 4-Wire 19.2 Kbps Digital Grade Loop		3	UDL	USBFN	23.10	125.43	73.68	81.82	21.56		7.86				

UNBUNDLED NETWORK ELEMENTS - Kentucky														Attachment: 2		Exhibit: B	
CATEGORY		RATE ELEMENTS	Interim	Zone	BCS	USOC	RATES($)					Svc Order Submitted Elec per LSR	Svc Order Submitted Manually per LSR	Incremental Charge - Manual Svc Order vs. Electronic-1st	Incremental Charge - Manual Svc Order vs. Electronic-Add'l	Incremental Charge - Manual Svc Order vs. Electronic-Disc 1st	Incremental Charge - Manual Svc Order vs. Electronic-Disc Add'l
							Rec	Nonrecurring		Nonrecurring Disconnect		OSS Rates($)					
								First	Add'l	First	Add'l	SOMEC	SOMAN	SOMAN	SOMAN	SOMAN	SOMAN
		Sub-Loop Feeder - Per 4-Wire 56 Kbps Digital Grade Loop - Zone 1		1	UDL	USBFO	20.78	125.43	73.68	81.82	21.56		7.86				
		Sub-Loop Feeder - Per 4-Wire 56 Kbps Digital Grade Loop - Zone 2		2	UDL	USBFO	26.41	125.43	73.68	81.82	21.56		7.86				
		Sub-Loop Feeder - Per 4-Wire 56 Kbps Digital Grade Loop - Zone 3		3	UDL	USBFO	23.10	125.43	73.68	81.82	21.56		7.86				
		Order Coordination For Specified Time Conversion, per LSR			UDL	OCOSL		23.01									
		Sub-Loop Feeder - Per 4-Wire 64 Kbps Digital Grade Loop - Zone 1		1	UDL	USBFP	20.78	125.43	73.68	81.82	21.56		7.86				
		Sub-Loop Feeder - Per 4-Wire 64 Kbps Digital Grade Loop - Zone 2		2	UDL	USBFP	26.41	125.43	73.68	81.82	21.56		7.86				
		Sub-Loop Feeder - Per 4-Wire 64 Kbps Digital Grade Loop - Zone 3		3	UDL	USBFP	23.10	125.43	73.68	81.82	21.56		7.86				
		Order Coordination For Specified Conversion Time, per LSR			UDL	OCOSL		23.01									
SUB-LOOPS																	
	Sub-Loop Feeder																
		Sub Loop Feeder - DS3 - Per Mile Per Month	I		UE3	1L5SL	15.38										
		Sub Loop Feeder - DS3 - Facility Termination Per Month	I		UE3	USBF1	346.30	3,386.00	407.14	160.86	91.19		7.86				
		Sub Loop Feeder – STS-1 – Per Mile Per Month	I		UDLSX	1L5SL	15.38										
		Sub Loop Feeder - STS-1 - Facility Termination Per Month	I		UDLSX	USBF7	372.80	3,386.00	407.14	160.86	91.19		7.86				
		Sub Loop Feeder – OC-3 – Per Mile Per Month	I		UDLO3	1L5SL	11.67										
		Sub Loop Feeder - OC-3 - Facility Termination Protection Per Month	I		UDLO3	USBF5	58.27										
		Sub Loop Feeder - OC-3 - Facility Termination Per Month	I		UDLO3	USBF2	564.68	3,386.00	407.14	160.86	91.19		7.86				
		Sub Loop Feeder - OC-12 - Per Mile Per Month	I		UDL12	1L5SL	14.36										
		Sub Loop Feeder - OC-12 - Facility Termination Protection Per Month	I		UDL12	USBF6	658.35										
		Sub Loop Feeder - OC-12 - Facility Termination Per Month	I		UDL12	USBF3	1,778.00	3,386.00	407.14	160.86	91.19		7.86				
		Sub Loop Feeder - OC-48 - Per Mile Per Month	I		UDL48	1L5SL	47.11										
		Sub Loop Feeder - OC-48 - Facility Termination Protection Per Month	I		UDL48	USBF9	330.39										
		Sub Loop Feeder - OC-48 - Facility Termination Per Month	I		UDL48	USBF4	1,533.00	3,571.00	407.14	160.86	91.19		7.86				
		Sub Loop Feeder - OC-12 Interface On OC-48	I		UDL48	USBF8	372.76	788.37	407.14	160.86	91.19		7.86				
UNBUNDLED LOOP CONCENTRATION																	
		Unbundled Loop Concentration - System A (TR008)			ULC	UCT8A	423.72	359.34	359.34				7.86				
		Unbundled Loop Concentration - System B (TR008)			ULC	UCT8B	51.60	149.72	149.72				7.86				
		Unbundled Loop Concentration - System A (TR303)			ULC	UCT3A	460.27	359.34	359.34				7.86				
		Unbundled Loop Concentration - System B (TR303)			ULC	UCT3B	86.95	149.72	149.72				7.86				
		Unbundled Loop Concentration - DS1 Loop Interface Card			ULC	UCTCO	4.90	71.69	51.51	22.99	6.00		7.86				
		Unbundled Loop Concentration - ISDN Loop Interface (Brite Card)			UDN	ULCC1	7.78	16.59	16.50	8.42	8.37		7.86				
		Unbundled Loop Concentration - UDC Loop Interface (Brite Card)			UDC	ULCCU	7.78	16.59	16.50	8.42	8.37		7.86				
		Unbundled Loop Concentration - -2 Wire Voice-Loop Start or Ground Start Loop Interface (POTS Card)			UEA	ULCC2	1.95	16.59	16.50	8.42	8.37		7.86				
		Unbundled Loop Concentration - 2 Wire Voice - Reverse Battery Loop Interface (SPOTS Card)			UEA	ULCCR	11.58	16.59	16.50	8.42	8.37		7.86				
		Unbundled Loop Concentration - 4 Wire Voice Loop Interface (Specials Card)			UEA	ULCC4	6.90	16.59	16.50	8.42	8.37		7.86				
		Unbundled Loop Concentration - TEST CIRCUIT Card			ULC	UCTTC	33.74	16.59	16.50	8.42	8.37		7.86				
		Unbundled Loop Concentration - Digital 19.2 Kbps Data Loop Interface			UDL	ULCC7	10.23	16.59	16.50	8.42	8.37		7.86				
		Unbundled Loop Concentration - Digital 56 Kbps Data Loop Interface			UDL	ULCC5	10.23	16.59	16.50	8.42	8.37		7.86				
		Unbundled Loop Concentration - Digital 64 Kbps Data Loop Interface			UDL	ULCC6	10.23	16.59	16.50	8.42	8.37		7.86				
UNE OTHER, PROVISIONING ONLY - NO RATE																	
		NID - Dispatch and Service Order for NID installation			UENTW	UNDBX											
		UNTW Circuit Id Establishment, Provisioning Only - No Rate			UENTW	UENCE											

UNBUNDLED NETWORK ELEMENTS - Kentucky														Attachment: 2		Exhibit: B	
CATEGORY		RATE ELEMENTS	Interim	Zone	BCS	USOC	RATES($)					Svc Order Submitted Elec per LSR	Svc Order Submitted Manually per LSR	Incremental Charge - Manual Svc Order vs. Electronic-1st	Incremental Charge - Manual Svc Order vs. Electronic-Add'l	Incremental Charge - Manual Svc Order vs. Electronic-Disc 1st	Incremental Charge - Manual Svc Order vs. Electronic-Disc Add'l
							Rec	Nonrecurring		Nonrecurring Disconnect		OSS Rates($)					
								First	Add'l	First	Add'l	SOMEC	SOMAN	SOMAN	SOMAN	SOMAN	SOMAN
		Unbundled Contract Name, Provisioning Only - No Rate			UEANL,UEF,UEQ,UENTW	UNECN											
UNE OTHER, PROVISIONING ONLY - NO RATE																	
		Unbundled Contact Name, Provisioning Only - no rate			UAL,UCL,UDC,UDL,UDN,UEA,UHL,ULC	UNECN	0.00	0.00									
		Unbundled Sub-Loop Feeder-2 Wire Cross Box Jumper - no rate			UEA,UDN,UCL,UDC	USBFQ	0.00	0.00									
		Unbundled Sub-Loop Feeder-4 Wire Cross Box Jumper - no rate			UEA,USL,UCL,UDL	USBFR	0.00	0.00									
		Unbundled DS1 Loop - Superframe Format Option - no rate			USL	CCOSF	0.00	0.00									
		Unbundled DS1 Loop - Expanded Superframe Format option - no rate			USL	CCOEF	0.00	0.00									
HIGH CAPACITY UNBUNDLED LOCAL LOOP																	
		High Capacity Unbundled Local Loop - DS3 - Per Mile per month			UE3	1L5ND	9.25										
		High Capacity Unbundled Local Loop - DS3 - Facility Termination per month			UE3	UE3PX	308.31	551.38	338.08	173.00	120.42		7.86				
		High Capacity Unbundled Local Loop - STS-1 - Per Mile per month			UDLSX	1L5ND	9.25										
		High Capacity Unbundled Local Loop - STS-1 - Facility Termination per month			UDLSX	UDLS1	320.51	551.38	338.08	173.00	120.42		7.86				
LOOP MAKE-UP																	
		Loop Makeup - Preordering Without Reservation, per working or spare facility queried (Manual).			UMK	UMKLW		23.40	23.40								
		Loop Makeup - Preordering With Reservation, per spare facility queried (Manual).			UMK	UMKLP		24.85	24.85								
		Loop Makeup--With or Without Reservation, per working or spare facility queried (Mechanized)			UMK	PSUMK		0.67	0.67								
HIGH FREQUENCY SPECTRUM																	
	SPLITTERS-CENTRAL OFFICE BASED																
		Line Sharing Splitter, per System 96 Line Capacity			ULS	ULSDA	198.83	379.05	0.00	358.55	0.00		7.86				
		Line Sharing Splitter, per System 24 Line Capacity			ULS	ULSDB	49.71	379.05	0.00	358.55	0.00		7.86				
		Line Sharing Splitter, Per System, 8 Line Capacity	I		ULS	ULSD8	16.94	377.71	0.00	357.29	0.00		7.86				
		Line Sharing-DLEC Owned Splitter in CO-CFA activaton-deactivation (per LSOD)			ULS	ULSDG		173.62		100.40			7.86				
	END USER ORDERING-CENTRAL OFFICE BASED-HIGH FREQUENCY SPECTRUM AKA LINE SHARING																
		Line Sharing - per Line Activation (BST Owned Splitter)			ULS	ULSDC	0.61	37.16	21.28	20.17	9.90		7.86				
		Line Sharing - per Subsequent Activity per Line Rearrangement(BST Owned Splitter)			ULS	ULSDS		32.90	16.43				7.86				
		Line Sharing - per Subsequent Activity per Line Rearrangement(DLEC Owned Splitter)			ULS	ULSCS		32.90	16.43				7.86				
		Line Sharing - per Line Activation (DLEC owned Splitter)	I		ULS	ULSCC	0.61	47.44	19.31	20.67	12.74		7.86				
		Line Splitting - per line activation DLEC owned splitter	I		UEPSR UEPSB	UREOS	0.61										
		Line Splitting - per line activation BST owned - physical	I		UEPSR UEPSB	UREBP	0.647	37.02	21.20	21.10	9.87		7.86				
		Line Splitting - per line activation BST owned - virtual	I		UEPSR UEPSB	UREBV	0.645	37.02	21.20	21.10	9.87		7.86				
UNBUNDLED DEDICATED TRANSPORT																	
	NOTE: INTEROFFICE CHANNEL DEDICATED TRANSPORT - minimum billing period - below DS3=one month, DS3/STS-1=four months																
	INTEROFFICE CHANNEL - DEDICATED TRANSPORT																
		Interoffice Channel - Dedicated Transport - 2-Wire Voice Grade - Per Mile per month			U1TVX	1L5XX	0.01										
		Interoffice Channel - Dedicated Transport- 2- Wire Voice Grade - Facility Termination per month			U1TVX	U1TV2	29.11	47.34	31.78	22.77	8.75		7.86				
		Interoffice Channel - Dedicated Transpor t- 2-Wire Voice Grade Rev Bat. - Per Mile per month			U1TVX	1L5XX	0.01										
		Interoffice Channel - Dedicated Transport- 2- Wire VG Rev Bat. - Facility Termination per month			U1TVX	U1TR2	29.11	47.34	31.78	22.77	8.75		7.86				
		Interoffice Channel - Dedicated Transport - 4-Wire Voice Grade - Per Mile per month			U1TVX	1L5XX	0.01										

UNBUNDLED NETWORK ELEMENTS - Kentucky														Attachment: 2		Exhibit: B	
CATEGORY		RATE ELEMENTS	Interim	Zone	BCS	USOC	RATES($)					Svc Order Submitted Elec per LSR	Svc Order Submitted Manually per LSR	Incremental Charge - Manual Svc Order vs. Electronic-1st	Incremental Charge - Manual Svc Order vs. Electronic-Add'l	Incremental Charge - Manual Svc Order vs. Electronic-Disc 1st	Incremental Charge - Manual Svc Order vs. Electronic-Disc Add'l
							Rec	Nonrecurring		Nonrecurring Disconnect		OSS Rates($)					
								First	Add'l	First	Add'l	SOMEC	SOMAN	SOMAN	SOMAN	SOMAN	SOMAN
		Interoffice Channel - Dedicated Transport - 4- Wire Voice Grade - Facility Termination per month			U1TVX	U1TV4	25.86	47.34	31.78	22.77	8.75		7.86				
		Interoffice Channel - Dedicated Transport - 56 kbps - per mile per month			U1TDX	1L5XX	0.0115										
		Interoffice Channel - Dedicated Transport - 56 kbps - Facility Termination per month			U1TDX	U1TD5	20.97	47.35	31.78	22.77	8.75		7.86				
		Interoffice Channel - Dedicated Transport - 64 kbps - per mile per month			U1TDX	1L5XX	0.0115										
		Interoffice Channel - Dedicated Transport - 64 kbps - Facility Termination per month			U1TDX	U1TD6	20.97	47.35	31.78	22.77	8.75		7.86				
		Interoffice Channel - Dedicated Channel - DS1 - Per Mile per month			U1TD1	1L5XX	0.23										
		Interoffice Channel - Dedicated Tranport - DS1 - Facility Termination per month			U1TD1	U1TF1	96.04	105.52	98.46	23.09	20.49		7.86				
		Interoffice Channel - Dedicated Transport - DS3 - Per Mile per month			U1TD3	1L5XX	4.97										
		Interoffice Channel - Dedicated Transport - DS3 - Facility Termination per month			U1TD3	U1TF3	1,175.15	335.40	219.24	89.57	87.75		7.86				
		Interoffice Channel - Dedicated Transport - STS-1 - Per Mile per month			U1TS1	1L5XX	4.97										
		Interoffice Channel - Dedicated Transport - STS-1 - Facility Termination per month			U1TS1	U1TFS	1,149.51	335.40	219.24	89.57	87.75		7.86				
	LOCAL CHANNEL - DEDICATED TRANSPORT																
	NOTE: LOCAL CHANNEL DEDICATED TRANSPORT - minimum billing period - below DS3=one month, DS3/STS-1=four months																
		Local Channel - Dedicated - 2-Wire Voice Grade Per Month			ULDVX	ULDV2	18.57	265.78	46.96	46.79	4.98		7.86				
		Local Channel - Dedicated - 2-Wire Voice Grade Rev Bat per month			ULDVX	ULDR2	18.57	265.78	46.96	46.79	4.98		7.86				
		Local Channel - Dedicated - 4-Wire Voice Grade per month			UNDVX	ULDV4	19.86	266.48	47.65	47.54	5.73		7.86				
		Local Channel - Dedicated - DS1 per month - Zone 1		1	ULDD1	ULDF1	40.46	209.60	176.51	30.21	21.07		7.86				
		Local Channel - Dedicated - DS1 per month - Zone 2		2	ULDD1	ULDF1	43.39	209.60	176.51	30.21	21.07		7.86				
		Local Channel - Dedicated - DS1 per month - Zone 3		3	ULDD1	ULDF1	164.50	209.60	176.51	30.21	21.07		7.86				
		Local Channel - Dedicated - DS3 - Per Mile per month			ULDD3	1L5NC	8.74										
		Local Channel - Dedicated - DS3 - Facility Termination per month			ULDD3	ULDF3	576.05	551.38	338.08	173.00	120.42		7.86				
		Local Channel - Dedicated - STS-1- Per Mile per month			ULDS1	1L5NC	8.74										
		Local Channel - Dedicated - STS-1 - Facility Termination per month			ULDS1	ULDFS	543.24	551.38	338.08	173.00	120.42		7.86				
MULTIPLEXERS																	
		Channelization - DS1 to DS0 Channel System			UXTD1	MQ1	113.33	101.40	71.60	13.79	13.04		7.86				
		OCU-DP COCI (data) - DS1 to DS0 Channel System - per month (2.4-64kbs)			UDL	1D1DD	1.32	10.07	7.08				7.86				
		2-wire ISDN COCI (BRITE) - DS1 to DS0 Channel Systsem - per month			UDN	UC1CA	2.84	10.07	7.08				7.86				
		Voice Grade COCI - DS1 to DS0 Channel System - per month			UEA	1D1VG	0.6228	10.07	7.08				7.86				
		DS3 to DS1 Channel System per month			UXTD3	MQ3	158.20	199.23	118.62	50.16	48.59		7.86				
		STS1 to DS1 Channel System per month			UXTS1	MQ3	158.20	199.23	118.62	50.16	48.59		7.86				
		DS3 Interface Unit (DS1 COCI) used with Loop per month			USL	UC1D1	11.80	10.07	7.08				7.86				
		DS3 Interface Unit (DS1 COCI) used with Local Channel per month			ULDD1	UC1D1	11.80	10.07	7.08				7.86				
		DS3 Interface Unit (DS1 COCI) used with Interoffice Channel per month			U1TD1	UC1D1	11.80	10.07	7.08				7.86				
DARK FIBER																	
		Dark Fiber, Four Fiber Strands, Per Route Mile or Fraction Thereof per month - Local Channel			UDF	1L5DC	47.01										
		NRC Dark Fiber - Local Channel			UDF	UDFC4		732.53	192.67	377.27	241.67		7.86				
		Dark Fiber, Four Fiber Strands, Per Route Mile or Fraction Thereof per month - Interoffice Channel			UDF	1L5DF	30.74										
		NRC Dark Fiber - Interoffice Channel			UDF	UDF14		732.53	192.67	377.27	241.67		7.86				

UNBUNDLED NETWORK ELEMENTS - Kentucky														Attachment: 2		Exhibit: B	
CATEGORY		RATE ELEMENTS	Interim	Zone	BCS	USOC	RATES($)					Svc Order Submitted Elec per LSR	Svc Order Submitted Manually per LSR	Incremental Charge - Manual Svc Order vs. Electronic-1st	Incremental Charge - Manual Svc Order vs. Electronic-Add'l	Incremental Charge - Manual Svc Order vs. Electronic-Disc 1st	Incremental Charge - Manual Svc Order vs. Electronic-Disc Add'l
							Rec	Nonrecurring		Nonrecurring Disconnect		OSS Rates($)					
								First	Add'l	First	Add'l	SOMEC	SOMAN	SOMAN	SOMAN	SOMAN	SOMAN
		Dark Fiber, Four Fiber Strands, Per Route Mile or Fraction Thereof per month - Local Loop			UDF	1L5DL	47.01										
		NRC Dark Fiber - Local Loop			UDF	UDFL4		732.53	192.67	377.27	241.67		7.86				
TRANSPORT OTHER																	
8XX ACCESS TEN DIGIT SCREENING																	
		8XX Access Ten Digit Screening, Per Call			OHD		0.0006478										
		8XX Access Ten Digit Screening, Reservation Charge Per 8XX Number Reserved			OHD	N8R1X		4.14	0.70				7.86				
		8XX Access Ten Digit Screening, Per 8XX No. Established W/O POTS Translations			OHD			8.78	1.18	7.08	0.86		7.86				
		8XX Access Ten Digit Screening, Per 8XX No. Established With POTS Translations			OHD	N8FTX		8.78	1.18	7.08	0.86		7.86				
		8XX Access Ten Digit Screening, Customized Area of Service Per 8XX Number			OHD	N8FCX		4.14	2.07				7.86				
		8XX Access Ten Digit Screening, Multiple InterLATA CXR Routing Per CXR Requested Per 8XX No.			OHD	N8FMX		4.85	2.78				7.86				
		8XX Access Ten Digit Screening, Change Charge Per Request			OHD	N8FAX		4.85	0.70				7.86				
		8XX Access Ten Digit Screening, Call Handling and Destination Features			OHD	N8FDX		4.14	4.14				7.86				
		8XX Access Ten Digit Screening w/ 8FL No. Delivery,			OHD		0.0006478										
		8XX Access Ten Digit Screening, w/ POTS No. Delivery,			OHD		0.0006478										
LINE INFORMATION DATA BASE ACCESS (LIDB)																	
		LIDB Common Transport Per Query			OQT		0.000023										
		LIDB Validation Per Query			OQU		0.0137322										
		LIDB Originating Point Code Establishment or Change			OQT, OQU	NRPBX		55.12		67.59			7.86				
SIGNALING (CCS7)																	
		CCS7 Signaling Connection, Per 56 Kbps Facility			UDB	TPP++	20.71	43.56	43.56	22.45	22.45						
		CCS7 Signaling Termination, Per STP Port			UDB	PT8SX	151.39										
		CCS7 Signaling Usage, Per TCAP Message			UDB		0.0000656										
		CCS7 Signaling Connection, Per link (A link)			UDB	TPP++	20.71	43.56	43.56	22.45	22.45		7.86				
		CCS7 Signaling Connection, Per link (B link) (also known as D link)			UDB	TPP++	20.71	43.56	43.56	22.45	22.45		7.86				
		CCS7 Signaling Usage, Per ISUP Message			UDB		0.0000164										
		CCS7 Signaling Usage Surrogate, per link per LATA			UDB	STU56	751.08										
		CCS7 Signaling Point Code, per Originating Point Code Establishment or Change, per STP affected			UDB	CCAPO		46.02	46.02	56.43	56.43		7.86				
		CCS7 Signaling Point Code, per Destination Point Code Establishment or Change, Per Stp Affected			UDB	CCAPD		46.02	46.02	56.43	56.43		7.86				
E911 SERVICE																	
		Local Channel - Dedicated - 2-wr Voice Grade					18.57	265.78	46.96	46.79	4.98			18.94	18.94		
		Interoffice Transport - Dedicated - 2-wr Voice Grade Per Mile					0.0115										
		Interoffice Transport - Dedicated - 2-wr Voice Grade Per Facility Termination					29.11	47.34	31.78	22.77	8.75			18.94	18.94		
		Local Channel - Dedicated - DS1 - Zone 1					40.46	209.60	176.51	30.21	21.07			18.94	18.94		
		Local Channel - Dedicated - DS1 - Zone 2					43.39	209.60	176.51	30.21	21.07			18.94	18.94		
		Local Channel - Dedicated - DS1 - Zone 3					164.50	209.60	176.51	30.21	21.07			18.94	18.94		
		Interoffice Transport - Dedicated - DS1 Per Mile					0.23										
		Interoffice Transport - Dedicated - DS1 Per Facility Termination					96.04	105.52	98.46	23.09	20.49			18.94	18.94		
CALLING NAME (CNAM) SERVICE																	
		CNAM For DB Owners - Service Establishment			OQV			25.34	25.34	23.30	23.30		7.86				
		CNAM For Non DB Owners - Service Establishment			OQV			25.34	25.34	23.30	23.30		7.86				
		CNAM For DB Owners - Service Provisioning With Point Code Establishment			OQV			1,591.54	1,177.08	431.95	317.61		7.86				
		CNAM For Non DB Owners - Service Provisioning With Point Code Establishment			OQV			546.40	393.74	438.93	317.61		7.86				
		CNAM for DB Owners, Per Query			OQV		0.0010348										
		CNAM for Non DB Owners, Per Query			OQV		0.0010348										

UNBUNDLED NETWORK ELEMENTS - Kentucky														Attachment: 2		Exhibit: B	
CATEGORY		RATE ELEMENTS	Interim	Zone	BCS	USOC	RATES($)					Svc Order Submitted Elec per LSR	Svc Order Submitted Manually per LSR	Incremental Charge - Manual Svc Order vs. Electronic-1st	Incremental Charge - Manual Svc Order vs. Electronic-Add'l	Incremental Charge - Manual Svc Order vs. Electronic-Disc 1st	Incremental Charge - Manual Svc Order vs. Electronic-Disc Add'l
							Rec	Nonrecurring		Nonrecurring Disconnect		OSS Rates($)					
								First	Add'l	First	Add'l	SOMEC	SOMAN	SOMAN	SOMAN	SOMAN	SOMAN
		CNAM (Non-Databs Owner), NRC, applies when using the Character Based User Interface (CHUI)			OQV	CDDCH		595.00	595.00				7.86				
LNP Query Service																	
		LNP Charge Per query					0.0008695										
		LNP Service Establishment Manual						13.82	13.82	12.71	12.71		7.86				
		LNP Service Provisioning with Point Code Establishment						953.27	487.00	431.95	317.61		7.86				
OPERATOR CALL PROCESSING																	
		Oper. Call Processing - Oper. Provided, Per Min. - Using BST LIDB					1.20										
		Oper. Call Processing - Oper. Provided, Per Min. - Using Foreign LIDB					1.24										
		Oper. Call Processing - Fully Automated, per Call - Using BST LIDB					0.20										
		Oper. Call Processing - Fully Automated, per Call - Using Foreign LIDB					0.20										
INWARD OPERATOR SERVICES																	
		Inward Operator Services - Verification, Per Call					1.00										
		Inward Operator Services - Verification and Emergency Interrupt - Per Call					1.95										
BRANDING - OPERATOR CALL PROCESSING																	
		Recording of Custom Branded OA Announcement				CBAOS		7,000.00	7,000.00				7.86				
		Loading of Custom Branded OA Announcement per shelf/NAV				CBAOL		500.00	500.00				7.86				
	Unbranding via OLNS for UNEP CLEC																
		Loading of OA per OCN (Regional)						1,200.00	1,200.00				7.86				
DIRECTORY ASSISTANCE SERVICES																	
	DIRECTORY ASSISTANCE ACCESS SERVICE																
		Directory Assistance Access Service Calls, Charge Per Call					0.275										
	DIRECTORY ASSISTANCE CALL COMPLETION ACCESS SERVICE (DACC)																
		Directory Assistance Call Completion Access Service (DACC), Per Call Attempt					0.10										
	DIRECTORY TRANSPORT																
DIRECTORY ASSISTANCE SERVICES																	
	DIRECTORY ASSISTANCE DATA BASE SERVICE (DADS)																
		Directory Assistance Data Base Service Charge Per Listing					0.04										
		Directory Assistance Data Base Service, per month				DBSOF	150.00										
BRANDING - DIRECTORY ASSISTANCE																	
	Facility Based CLEC																
		Recording and Provisioning of DA Custom Branded Announcement			AMT	CBADA		6,000.00	6,000.00								
		Loading of Custom Branded Announcement per DRAM Card/Switch			AMT	CBADC		1,170.00	1,170.00								
	UNEP CLEC																
		Recording of DA Custom Branded Announcement						3,000.00	3,000.00								
		Loading of DA Custom Branded Announcement per DRAM Card/Switch per OCN						1,170.00	1,170.00								
	Unbranding via OLNS for UNEP CLEC																
		Loading of DA per OCN (1 OCN per Order)						420.00	420.00								
		Loading of DA per Switch per OCN						16.00	16.00								
SELECTIVE ROUTING																	
		Selective Routing Per Unique Line Class Code Per Request Per Switch				USRCR		93.53	93.53	15.58	15.58		7.86				
VIRTUAL COLLOCATION																	
		Virtual Collocation - Application Cost			AMTFS	EAF		2,419.86	2,419.86	1.01	1.01						
		Virtual Collocation - Cable Installation Cost, per cable			AMTFS	ESPCX		1,729.11	1,729.11	45.16	45.16						
		Virtual Collocation - Floor Space, per sq. ft.			AMTFS	ESPVX	7.99										
		Virtual Collocation - Power, per breaker amp			AMTFS	ESPAX	8.06										
		Virtual Collocation - Cable Support Structure, per entrance cable			AMTFS	ESPSX	17.38										

UNBUNDLED NETWORK ELEMENTS - Kentucky														Attachment: 2		Exhibit: B	
CATEGORY		RATE ELEMENTS	Interim	Zone	BCS	USOC	RATES($)					Svc Order Submitted Elec per LSR	Svc Order Submitted Manually per LSR	Incremental Charge - Manual Svc Order vs. Electronic-1st	Incremental Charge - Manual Svc Order vs. Electronic-Add'l	Incremental Charge - Manual Svc Order vs. Electronic-Disc 1st	Incremental Charge - Manual Svc Order vs. Electronic-Disc Add'l
							Rec	Nonrecurring		Nonrecurring Disconnect		OSS Rates($)					
								First	Add'l	First	Add'l	SOMEC	SOMAN	SOMAN	SOMAN	SOMAN	SOMAN
		Virtual Collocation - 2-wire Cross Connects (loop)			UEANL,UEA,UDN,UDC,UAL,UHL,UCL,UEQ, AMTFS, UDL, UNCVX, UNCDX, UNCNX	UEAC2	0.0309	24.68	23.68	12.14	10.95		19.99				
		Virtual Collocation - 4-wire Cross Connects (loop)			UEA,UHL,UCL,UDL, AMTFS, UAL, UDN, UNCVX, UNCDX	UEAC4	0.0619	24.88	23.82	12.77	11.46		19.99				
		Virtual Collocation - 2-Fiber Cross Connects			AMTFS,UDL12, UDLO3, U1T48, U1T12, U1T03, ULDO3, ULD12, ULD48, UDF	CNC2F	3.80	41.94	30.51	14.76	11.84			19.99	19.99	19.99	19.99
		Virtual Collocation - 4-Fiber Cross Connects			AMTFS,UDL12, UDLO3, U1T48, U1T12, U1T03, ULDO3, ULD12, ULD48, UDF	CNC4F	7.59	51.29	39.87	19.41	16.49			19.99	19.99	19.99	19.99
		Virtual collocation - DS1 Cross Connects			USL,ULC,AMTFS, ULR, UXTD1, UNC1X, ULDD1, U1TD1, USLEL, UNLD1	CNC1X	1.48	44.23	31.98	12.81	11.57						
		Virtual collocation - DS3 Cross Connects			USL,ULC,AMTFS,UE3, U1TD3, UXTS1, UXTD3, UNC3X, UNCSX, ULDD3, U1TS1, ULDS1, UDLSX, UNLD3	CND3X	18.89	41.93	30.51	14.75	11.83						
		Virtual Collocation - Co-Carrier Cross Connects - Fiber Cable Support Structure, per linear foot			AMTFS	VE1CB	0.003										
		Virtual Collocation - Co-Carrier Cross Connects - Copper/Coax Cable Support Structure, per linear ft			AMTFS	VE1CD	0.0045										
		Virtual Collocation - Co-Carrier Cross Connects - Fiber Cable Support Structure,per cable			AMTFS	VE1CC		535.55									
		Virtual Collocation - Co-Carrier Cross Connects - Copper/Coax Cable Support Structure, per cable			AMTFS	VE1CE		535.55									
		Virtual collocation - Security Escort - Basic, per half hour			AMTFS	SPTBX		33.98	21.53								
		Virtual collocation - Security Escort - Overtime, per half hour			AMTFS	SPTOX		44.26	27.81								
		Virtual collocation - Security Escort - Premium, per half hour			AMTFS	SPTPX		54.54	34.09								
		Virtual collocation - Maintenance in CO - Basic, per half hour			AMTFS	CTRLX		56.07	21.53								
		Virtual collocation - Maintenance in CO - Overtime, per half hour			AMTFS	SPTOM		73.23	27.81								
		Virtual collocation - Maintenance in CO - Premium per half hour			AMTFS	SPTPM		90.39	34.09								
VIRTUAL COLLOCATION																	
		Virtual Collocation - 2-wire Cross Connect, Exchange Port 2-Wire Analog - Res			UEPSR	VE1R2	0.0309	24.68	23.68	12.14	10.95		7.86				
		Virtual Collocation 2-Wire Cross Connect, Exchange Port 2-Wire Line Side PBX Trunk - Bus			UEPSP	VE1R2	0.0309	24.68	23.68	12.14	10.95		7.86				
		Virtual Collocation 2-Wire Cross Connect, Exchange Port 2-Wire Voice Grade PBX Trunk - Res			UEPSE	VE1R2	0.0309	24.68	23.68	12.14	10.95		7.86				
		Virtual Collocation 2-Wire Cross Connect, Exchange Port 2-Wire Analog Bus			UEPSB	VE1R2	0.0309	24.68	23.68	12.14	10.95		7.86				
		Virtual Collocation 2-Wire Cross Connect, Exchnage Port 2-Wire ISDN			UEPSX	VE1R2	0.0309	24.68	23.68	12.14	10.95		7.86				
		Virtual Collocation 2-Wire Cross Connect, Exchange Port 2-Wire ISDN			UEPTX	VE1R2	0.0309	24.68	23.68	12.14	10.95		7.86				

UNBUNDLED NETWORK ELEMENTS - Kentucky													Attachment: 2		Exhibit: B	
CATEGORY	RATE ELEMENTS	Interim	Zone	BCS	USOC	RATES($)					Svc Order Submitted Elec per LSR	Svc Order Submitted Manually per LSR	Incremental Charge - Manual Svc Order vs. Electronic-1st	Incremental Charge - Manual Svc Order vs. Electronic-Add'l	Incremental Charge - Manual Svc Order vs. Electronic-Disc 1st	Incremental Charge - Manual Svc Order vs. Electronic-Disc Add'l
						Rec	Nonrecurring		Nonrecurring Disconnect		OSS Rates($)					
							First	Add'l	First	Add'l	SOMEC	SOMAN	SOMAN	SOMAN	SOMAN	SOMAN
	Virtual Collocation 4-Wire Cross Connect, Exchange Port 4-Wire ISDN DS1			UEPEX	VE1R4	1.48	44.23	31.98	12.81	11.57		7.86				
VIRTUAL COLLOCATION																
	Virtual Collocation-2 Wire Cross Connects (Loop) for Line Splitting			UEPSR, UEPSB	VE1LS	0.309	24.68	23.68	12.14	10.95		7.86				
AIN SELECTIVE CARRIER ROUTING																
	Regional Service Establishment			SRC	SRCEC		193,401.00	193,401.00	9,483.34	9,483.34		7.86				
	End Office Establishment			SRC	SRCEO		194.09	194.09	0.85	0.85		7.86				
	Line/Port NRC, per end user			SRC	SRCLP		2.06	2.06				7.86				
	Query NRC, per query			SRC		0.0037502										
AIN - BELLSOUTH AIN SMS ACCESS SERVICE																
	AIN SMS Access Service - Service Establishment, Per State, Initial Setup			A1N	CAMSE		43.55	43.55	44.93	44.93		7.86				
	AIN SMS Access Service - Port Connection - Dial/Shared Access			A1N	CAMDP		8.64	8.64	10.03	10.03		7.86				
	AIN SMS Access Service - Port Connection - ISDN Access			A1N	CAM1P		8.64	8.64	10.03	10.03		7.86				
	AIN SMS Access Service - User Identification Codes - Per User ID Code			A1N	CAMAU		38.65	38.65	29.88	29.88		7.86				
	AIN SMS Access Service - Security Card, Per User ID Code, Initial or Replacement			A1N	CAMRC		75.08	75.08	12.93	12.93		7.86				
	AIN SMS Access Service - Storage, Per Unit (100 Kilobytes)					0.0025										
	AIN SMS Access Service - Session, Per Minute					0.666										
	AIN SMS Access Service - Company Performed Session, Per Minute					0.4608										
AIN - BELLSOUTH AIN TOOLKIT SERVICE																
	AIN Toolkit Service - Service Establishment Charge, Per State, Initial Setup			CAM	BAPSC		43.55	43.55	44.93	44.93		7.86				
	AIN Toolkit Service - Training Session, Per Customer				BAPVX		8,436.93	8,436.93				7.86				
	AIN Toolkit Service - Trigger Access Charge, Per Trigger, Per DN, Term. Attempt				BAPTT		8.64	8.64	10.03	10.03		7.86				
	AIN Toolkit Service - Trigger Access Charge, Per Trigger, Per DN, Off-Hook Delay				BAPTD		8.64	8.64	10.03	10.03		7.86				
	AIN Toolkit Service - Trigger Access Charge, Per Trigger, Per DN, Off-Hook Immediate				BAPTM		8.64	8.64	10.03	10.03		7.86				
	AIN Toolkit Service - Trigger Access Charge, Per Trigger, Per DN, 10-Digit PODP				BAPTO		51.01	51.01	18.50	18.50		7.86				
	AIN Toolkit Service - Trigger Access Charge, Per Trigger, Per DN, CDP				BAPTC		51.01	51.01	18.50	18.50		7.86				
	AIN Toolkit Service - Trigger Access Charge, Per Trigger, Per DN, Feature Code				BAPTF		51.01	51.01	18.50	18.50		7.86				
	AIN Toolkit Service - Query Charge, Per Query					0.0549207										
	AIN Toolkit Service - Type 1 Node Charge, Per AIN Toolkit Subscription, Per Node, Per Query					0.0066492										
	AIN Toolkit Service - SCP Storage Charge, Per SMS Access Account, Per 100 Kilobytes					0.07										
	AIN Toolkit Service - Monthly report - Per AIN Toolkit Service Subscription			CAM	BAPMS	7.87	8.64	8.64	6.08	6.08		7.86				
	AIN Toolkit Service - Special Study - Per AIN Toolkit Service Subscription			CAM	BAPLS	3.26	9.56	9.56				7.86				
	AIN Toolkit Service - Call Event Report - Per AIN Toolkit Service Subscription			CAM	BAPDS	4.72	8.64	8.64	6.08	6.08		7.86				
	AIN Toolkit Service - Call Event Special Study - Per AIN Toolkit Service Subscription			CAM	BAPES	0.11	9.56	9.56				7.86				
ENHANCED EXTENDED LINK (EELs)																
	NOTE: New EELs available in GA, TN, KY, LA, MS, & SC and density zone 1 of following MSAs: Orlando, FL; Miami, FL; Ft. Lauderdale, FL;															
	NOTE: Charlotte-Gastonia-Rockhill, NC; Greensboro-Winston Salem-High Point, NC. Use all rates below except Switch As Is Charge.															
	NOTE: In all states, EEL network elements shown below also apply to currently combined facilities which are converted to UNE rates. A Switch As Is Charge applies to currently combined facilities converted to UNEs.(Non-recurring rates do not apply.)															
	NOTE: In GA, TN, KY, LA, MS & SC the EEL network elements apply to ordinarily combined network elements.(No Switch As Is Charge.)															
	2-WIRE VOICE GRADE EXTENDED LOOP WITH DEDICATED DS1 INTEROFFICE TRANSPORT (EEL)															

CATEGORY		RATE ELEMENTS	Interim	Zone	BCS	USOC	RATES($)					Svc Order Submitted Elec per LSR	Svc Order Submitted Manually per LSR	Incremental Charge - Manual Svc Order vs. Electronic-1st	Incremental Charge - Manual Svc Order vs. Electronic-Add'l	Incremental Charge - Manual Svc Order vs. Electronic-Disc 1st	Incremental Charge - Manual Svc Order vs. Electronic-Disc Add'l
								Nonrecurring		Nonrecurring Disconnect		OSS Rates($)					
							Rec	First	Add'l	First	Add'l	SOMEC	SOMAN	SOMAN	SOMAN	SOMAN	SOMAN
		First 2-Wire VG Loop(SL2) in a DS1 Interofficed Transport Combination - Zone 1		1	UNCVX	UEAL2	12.67	125.22	60.48	59.69	7.84		7.86				
		First 2-Wire VG Grade Loop(SL2) in a DS1 Interofficed Transport Combination - Zone 2		2	UNCVX	UEAL2	17.45	125.22	60.48	59.69	7.84		7.86				
		First 2-Wire VG Grade Loop(SL2) in a DS1 Interofficed Transport Combination - Zone 3		3	UNCVX	UEAL2	33.22	125.22	60.48	59.69	7.84		7.86				
		Interoffice Transport - Dedicated - DS1 combination - Per Mile per month			UNC1X	1L5XX	0.19										
		Interoffice Transport - Dedicated - DS1 combination - Facility Termination per month			UNC1X	U1TF1	79.02	181.24	123.53	56.72	22.32		7.86				
		DS1 Channelization System Per Month			UNC1X	MQ1	113.33	57.26	14.74	1.86	1.67		7.86				
		Voice Grade COCI - DS1 To Ds0 Interface - Per Month			UNCVX	1D1VG	0.62	6.71	4.84				7.86				
		Each Additional 2-Wire VG Loop(SL 2) in the same DS1 Interoffice Transport Combination - Zone 1		1	UNCVX	UEAL2	12.67	125.22	60.48	59.69	7.84		7.86				
		Each Additional 2-Wire VG Loop(SL2) in the same DS1 Interoffice Transport Combination - Zone 2		2	UNCVX	UEAL2	17.45	125.22	60.48	59.69	7.84		7.86				
		Each Additional 2-Wire VG Loop(SL2) in the same DS1 Interoffice Transport Combination - Zone 3		3	UNCVX	UEAL2	33.22	125.22	60.48	59.69	7.84		7.86				
		Voice Grade COCI - DS1 to DS0 Channel System combination - per month			UNCVX	1D1VG	0.62	6.71	4.84				7.86				
		Nonrecurring Currently Combined Network Elements Switch -As-Is Charge			UNC1X	UNCCC		8.98	8.98	11.17	11.17		7.86				
	4-WIRE VOICE GRADE EXTENDED LOOP WITH DEDICATED DS1 INTEROFFICE TRANSPORT (EEL)																
		First 4-Wire Analog Voice Grade Loop in a DS1 Interoffice Transport Combination - Zone 1		1	UNCVX	UEAL4	29.26	125.22	60.48	59.69	7.84		7.86				
		First 4-Wire Analog Voice Grade Loop in a DS1 Interoffice Transport Combination - Zone 2		2	UNCVX	UEAL4	34.25	125.22	60.48	59.69	7.84		7.86				
		First 4-Wire Analog Voice Grade Loop in a DS1 Interoffice Transport Combination - Zone 3		3	UNCVX	UEAL4	85.06	125.22	60.48	59.69	7.84		7.86				
		Interoffice Transport - Dedicated - DS1 combination - Per Mile Per Month			UNC1X	1L5XX	0.19										
		Interoffice Transport - Dedicated - DS1 - Facility Termination Per Month			UNC1X	U1TF1	79.02	181.24	123.53	56.72	22.32		7.86				
		Channelization - Channel System DS1 to DS0 combination Per Month			UNC1X	MQ1	113.33	57.26	14.74	1.86	1.67		7.86				
		Voice Grade COCI - DS1 to DS0 Channel System combination - per month			UNCVX	1D1VG	0.62	6.71	4.84				7.86				
		Additional 4-Wire Analog Voice Grade Loop in same DS1 Interoffice Transport Combination - Zone 1		1	UNCVX	UEAL4	29.26	125.22	60.48	59.69	7.84		7.86				
		Additional 4-Wire Analog Voice Grade Loop in same DS1 Interoffice Transport Combination - Zone 2		2	UNCVX	UEAL4	34.25	125.22	60.48	59.69	7.84		7.86				
		Additional 4-Wire Analog Voice Grade Loop in same DS1 Interoffice Transport Combination - Zone 3		3	UNCVX	UEAL4	85.06	125.22	60.48	59.69	7.84		7.86				
		Voice Grade COCI - DS1 to DS0 Channel System combination - per month			UNCVX	1D1VG	0.62	6.71	4.84				7.86				
		Nonrecurring Currently Combined Network Elements Switch -As-Is Charge			UNC1X	UNCCC		8.98	8.98	11.17	11.17		7.86				
	4-WIRE 56 KBPS EXTENDED DIGITAL LOOP WITH DEDICATED DS1 INTEROFFICE TRANSPORT (EEL)																
		First 4-Wire 56Kbps Digital Grade Loop in a DS1 Interoffice Transport Combination - Zone 1		1	UNCDX	UDL56	27.59	125.22	60.48	59.69	7.84		7.86				
		First 4-wire 56Kbps Digital Grade Loop in a DS1 Interoffice Transport Combination - Zone 2		2	UNCDX	UDL56	32.48	125.22	60.48	59.69	7.84		7.86				
		First 4-Wire 56Kbps Digital Grade Loop in a DS1 Interoffice Transport Combination - Zone 3		3	UNCDX	UDL56	36.37	125.22	60.48	59.69	7.84		7.86				
		Interoffice Transport - Dedicated - DS1 combination - Per Mile Per Month			UNC1X	1L5XX	0.19										
		Interoffice Transport - Dedicated - DS1 - combination Facility Termination Per Month			UNC1X	U1TF1	79.02	181.24	123.53	56.72	22.32		7.86				

UNBUNDLED NETWORK ELEMENTS - Kentucky														Attachment: 2		Exhibit: B	
CATEGORY		RATE ELEMENTS	Interim	Zone	BCS	USOC	RATES($)					Svc Order Submitted Elec per LSR	Svc Order Submitted Manually per LSR	Incremental Charge - Manual Svc Order vs. Electronic-1st	Incremental Charge - Manual Svc Order vs. Electronic-Add'l	Incremental Charge - Manual Svc Order vs. Electronic-Disc 1st	Incremental Charge - Manual Svc Order vs. Electronic-Disc Add'l
							Rec	Nonrecurring		Nonrecurring Disconnect		OSS Rates($)					
								First	Add'l	First	Add'l	SOMEC	SOMAN	SOMAN	SOMAN	SOMAN	SOMAN
		Channelization - Channel System DS1 to DS0 combination Per Month			UNC1X	MQ1	113.33	57.26	14.74	1.86	1.67		7.86				
		OCU-DP COCI (data) - DS1 to DS0 Channel System - per month (2.4-64kbs)			UNCDX	1D1DD	1.32	6.71	4.84				7.86				
		Additional 4-Wire 56Kbps Digital Grade Loopin same DS1 Interoffice Transport Combination - Zone 1		1	UNCDX	UDL56	27.59	125.22	60.48	59.69	7.84		7.86				
		Additional 4-Wire 56Kbps Digital Grade Loopin same DS1 Interoffice Transport Combination - Zone 2		2	UNCDX	UDL56	32.48	125.22	60.48	59.69	7.84		7.86				
		Additional 4-Wire 56Kbps Digital Grade Loopin same DS1 Interoffice Transport Combination - Zone 3		3	UNCDX	UDL56	36.37	125.22	60.48	59.69	7.84		7.86				
		OCU-DP COCI (data) - DS1 to DS0 Channel System - combination per month (2.4-64kbs)			UNCDX	1D1DD	1.32	6.71	4.84				7.86				
		Nonrecurring Currently Combined Network Elements Switch -As-Is Charge			UNC1X	UNCCC		8.98	8.98	11.17	11.17		7.86				
	4-WIRE 64 KBPS EXTENDED DIGITAL LOOP WITH DEDICATED DS1 INTEROFFICE TRANSPORT (EEL)																
		First 4-Wire 64Kbps Digital Grade Loop in a DS1 Interoffice Transport Combination - Zone 1		1	UNCDX	UDL64	27.59	125.22	60.48	59.69	7.84		7.86				
		First 4-Wire 64Kbps Digital Grade Loop in a DS1 Interoffice Transport Combination - Zone 2		2	UNCDX	UDL64	32.48	125.22	60.48	59.69	7.84		7.86				
		First 4-Wire 64Kbps Digital Grade Loop in a DS1 Interoffice Transport Combination - Zone 3		3	UNCDX	UDL64	36.37	125.22	60.48	59.69	7.84		7.86				
		Interoffice Transport - Dedicated - DS1 combination - Per Mile Per Month			UNC1X	1L5XX	0.19										
		Interoffice Transport - Dedicated - DS1 combination - Facility Termination Per Month			UNC1X	U1TF1	79.02	181.24	123.53	56.72	22.32		7.86				
		Channelization - Channel System DS1 to DS0 combination Per Month			UNC1X	MQ1	113.33	57.26	14.74	1.86	1.67		7.86				
		OCU-DP COCI (data) - DS1 to DS0 Channel System combination - per month (2.4-64kbs)			UNCDX	1D1DD	1.32	6.71	4.84				7.86				
		Additional 4-Wire 64Kbps Digital Grade Loopin same DS1 Interoffice Transport Combination - Zone 1		1	UNCDX	UDL64	27.59	125.22	60.48	59.69	7.84		7.86				
		Additional 4-Wire 64Kbps Digital Grade Loopin same DS1 Interoffice Transport Combination - Zone 2		2	UNCDX	UDL64	32.48	125.22	60.48	59.69	7.84		7.86				
		Additional 4-Wire 64Kbps Digital Grade Loopin same DS1 Interoffice Transport Combination - Zone 3		3	UNCDX	UDL64	36.37	125.22	60.48	59.69	7.84		7.86				
		OCU-DP COCI (data) - DS1 to DS0 Channel System combination - per month (2.4-64kbs)			UNCDX	1D1DD	1.32	6.71	4.84				7.86				
		Nonrecurring Currently Combined Network Elements Switch -As-Is Charge			UNC1X	UNCCC		8.98	8.98	11.17	11.17		7.86				
	4-WIRE DS1 DIGITAL EXTENDED LOOP WITH DEDICATED DS1 INTEROFFICE TRANSPORT (EEL)																
		4-Wire DS1 Digital Loop in Combination with DS1 Interoffice Transport - Zone 1		1	UNC1X	USLXX	86.47	210.70	114.60	63.96	17.97		7.86				
		4-Wire DS1 Digital Loop in Combination with DS1 Interoffice Transport - Zone 2		2	UNC1X	USLXX	114.10	210.70	114.60	63.96	17.97		7.86				
		4-Wire DS1 Digital Loop in Combination with DS1 Interoffice Transport - Zone 3		3	UNC1X	USLXX	297.76	210.70	114.60	63.96	17.97		7.86				
		Interoffice Transport - Dedicated - DS1 combination - Per Mile Per Month			UNC1X	1L5XX	0.19										
		Interoffice Transport - Dedicated - DS1 combination - Facility Termination Per Month			UNC1X	U1TF1	79.02	181.24	123.53	56.72	22.32		7.86				
		Nonrecurring Currently Combined Network Elements Switch -As-Is Charge			UNC1X	UNCCC		8.98	8.98	11.17	11.17		7.86				
	4-WIRE DS1 DIGITAL EXTENDED LOOP WITH DEDICATED DS3 INTEROFFICE TRANSPORT (EEL)																
		First DS1Loop in DS3 Interoffice Transport Combination - Zone 1		1	UNC1X	USLXX	86.47	210.70	114.60	63.96	17.97		7.86				
		First DS1Loop in DS3 Interoffice Transport Combination - Zone 2		2	UNC1X	USLXX	114.10	210.70	114.60	63.96	17.97		7.86				
		First DS1Loop in DS3 Interoffice Transport Combination - Zone 3		3	UNC1X	USLXX	297.76	210.70	114.60	63.96	17.97		7.86				

UNBUNDLED NETWORK ELEMENTS - Kentucky														Attachment: 2		Exhibit: B	
CATEGORY		RATE ELEMENTS	Interim	Zone	BCS	USOC	RATES($)					Svc Order Submitted Elec per LSR	Svc Order Submitted Manually per LSR	Incremental Charge - Manual Svc Order vs. Electronic-1st	Incremental Charge - Manual Svc Order vs. Electronic-Add'l	Incremental Charge - Manual Svc Order vs. Electronic-Disc 1st	Incremental Charge - Manual Svc Order vs. Electronic-Disc Add'l
							Rec	Nonrecurring		Nonrecurring Disconnect		OSS Rates($)					
								First	Add'l	First	Add'l	SOMEC	SOMAN	SOMAN	SOMAN	SOMAN	SOMAN
		Interoffice Transport - Dedicated - DS3 combination - Per Mile Per Month			UNC3X	1L5XX	4.09										
		Interoffice Transport - Dedicated - DS3 - Facility Termination per month			UNC3X	U1TF3	966.89	350.56	141.58	48.00	23.39		7.86				
		DS3 to DS1 Channel System combination per month			UNC3X	MQ3	158.20	115.48	56.53	15.12	5.30		7.86				
		DS3 Interface Unit (DS1 COCI) combination per month			UNC1X	UC1D1	11.80	6.71	4.84				7.86				
		Additional DS1Loop in DS3 Interoffice Transport Combination - Zone 1		1	UNC1X	USLXX	86.47	210.70	114.60	63.96	17.97		7.86				
		Additional DS1Loop in DS3 Interoffice Transport Combination - Zone 2		2	UNC1X	USLXX	114.10	210.70	114.60	63.96	17.97		7.86				
		Additional DS1Loop in DS3 Interoffice Transport Combination - Zone 3		3	UNC1X	USLXX	297.76	210.70	114.60	63.96	17.97		7.86				
		DS3 Interface Unit (DS1 COCI) combination per month			UNC1X	UC1D1	11.80	6.71	4.84				7.86				
		Nonrecurring Currently Combined Network Elements Switch -As-Is Charge			UNC3X	UNCCC		8.98	8.98	11.17	11.17		7.86				
	2-WIRE VOICE GRADE EXTENDED LOOP/ 2 WIRE VOICE GRADE INTEROFFICE TRANSPORT (EEL)																
		2-WireVG Loop used with 2-wire VG Interoffice Transport Combination - Zone 1		1	UNCVX	UEAL2	12.67	125.22	60.48	59.69	7.84		7.86				
		2-WireVG Loop used with 2-wire VG Interoffice Transport Combination - Zone 2		2	UNCVX	UEAL2	17.45	125.22	60.48	59.69	7.84		7.86				
		2-WireVG Loop used with 2-wire VG Interoffice Transport Combination - Zone 3		3	UNCVX	UEAL2	33.22	125.22	60.48	59.69	7.84		7.86				
		Interoffice Transport - Dedicated - 2-wire VG combination - Per Mile Per Month			UNCVX	1L5XX	0.01										
		Interoffice Transport - Dedicated - 2- Wire Voice Grade combination - Facility Termination per month			UNCVX	U1TV2	23.95	98.09	53.67	56.31	22.42		7.86				
		Nonrecurring Currently Combined Network Elements Switch -As-Is Charge			UNCVX	UNCCC		8.98	8.98	11.17	11.17		7.86				
	4-WIRE VOICE GRADE EXTENDED LOOP/ 4 WIRE VOICE GRADE INTEROFFICE TRANSPORT (EEL)																
		4-WireVG Loop used with 4-wire VG Interoffice Transport Combination - Zone 1		1	UNCVX	UEAL4	29.26	125.22	60.48	59.69	7.84		7.86				
		4-WireVG Loop used with 4-wire VG Interoffice Transport Combination - Zone 2		2	UNCVX	UEAL4	34.25	125.22	60.48	59.69	7.84		7.86				
		4-WireVG Loop used with 4-wire VG Interoffice Transport Combination - Zone 3		3	UNCVX	UEAL4	85.06	125.22	60.48	59.69	7.84		7.86				
		Interoffice Transport - Dedicated - 4-wire VG combination - Per Mile Per Month			UNCVX	1L5XX	0.01										
		Interoffice Transport - Dedicated - 4- Wire Voice Grade combination - Facility Termination per month			UNCVX	U1TV4	21.28	98.09	53.67	56.31	22.42		7.86				
		Nonrecurring Currently Combined Network Elements Switch -As-Is Charge			UNCVX	UNCCC		8.98	8.98	11.17	11.17		7.86				
	DS3 DIGITAL EXTENDED LOOP WITH DEDICATED DS3 INTEROFFICE TRANSPORT (EEL)																
		High Capacity Unbundled Local Loop - DS3 combination - Per Mile per month			UNC3X	1L5ND	9.25										
		High Capacity Unbundled Local Loop - DS3 combination - Facility Termination per month			UNC3X	UE3PX	308.31	237.36	147.69	83.43	32.67		7.86				
		Interoffice Transport - Dedicated - DS3 - Per Mile per month			UNC3X	1L5XX	4.09										
		Interoffice Transport - Dedicated - DS3 combination - Facility Termination per month			UNC3X	U1TF3	966.89	350.56	141.58	48.00	23.39		7.86				
		Nonrecurring Currently Combined Network Elements Switch -As-Is Charge			UNC3X	UNCCC		8.98	8.98	11.17	11.17		7.86				
	STS1 DIGITAL EXTENDED LOOP WITH DEDICATED STS1 INTEROFFICE TRANSPORT (EEL)																
		High Capacity Unbundled Local Loop - STS1 combination - Per Mile per month			UNCSX	1L5ND	9.25										
		High Capacity Unbundled Local Loop - STS1 combination - Facility Termination per month			UNCSX	UDLS1	320.51	237.36	147.69	83.43	32.67		7.86				
		Interoffice Transport - Dedicated - STS1 combination - Per Mile per month			UNCSX	1L5XX	4.09										

CATEGORY	RATE ELEMENTS	Interim	Zone	BCS	USOC	RATES($) Rec	Nonrecurring First	Nonrecurring Add'l	Nonrecurring Disconnect First	Nonrecurring Disconnect Add'l	Svc Order Submitted Elec per LSR	Svc Order Submitted Manually per LSR	Incremental Charge - Manual Svc Order vs. Electronic-1st	Incremental Charge - Manual Svc Order vs. Electronic-Add'l	Incremental Charge - Manual Svc Order vs. Electronic-Disc 1st	Incremental Charge - Manual Svc Order vs. Electronic-Disc Add'l
											OSS Rates($)					
							First	Add'l	First	Add'l	SOMEC	SOMAN	SOMAN	SOMAN	SOMAN	SOMAN
	Interoffice Transport - Dedicated - STS1 combination - Facility Termination per month			UNCSX	U1TFS	945.79	350.56	141.58	48.00	23.39		7.86				
	Nonrecurring Currently Combined Network Elements Switch -As-Is Charge			UNCSX	UNCCC		8.98	8.98	11.17	11.17		7.86				
	2-WIRE ISDN EXTENDED LOOP WITH DS1 INTEROFFICE TRANSPORT (EEL)															
	First 2-Wire ISDN Loop in a DS1 Interoffice Combination Transport - Zone 1		1	UNCNX	U1L2X	18.44	125.22	60.48	59.69	7.84		7.86				
	First 2-Wire ISDN Loop in a DS1 Interoffice Combination Transport - Zone 2		2	UNCNX	U1L2X	25.08	125.22	60.48	59.69	7.84		7.86				
	First 2-Wire ISDN Loop in a DS1 Interoffice Combination Transport - Zone 3		3	UNCNX	U1L2X	42.87	125.22	60.48	59.69	7.84		7.86				
	Interoffice Transport - Dedicated - DS1 combination - Per Mile			UNC1X	1L5XX	0.19										
	Interoffice Transport - Dedicated - DS1 combintion - Facility Termination per month			UNC1X	U1TF1	79.02	181.24	123.53	56.72	22.32		7.86				
	Channelization - Channel System DS1 to DS0 combination - per month			UNC1X	MQ1	113.33	57.26	14.74	1.86	1.67		7.86				
	2-wire ISDN COCI (BRITE) - DS1 to DS0 Channel System combination - per month			UNCNX	UC1CA	2.84	6.71	4.84				7.86				
	Additional 2-wire ISDN Loop in same DS1Interoffice Transport Combination - Zone 1		1	UNCNX	U1L2X	18.44	125.22	60.48	59.69	7.84		7.86				
	Additional 2-wire ISDN Loop in same DS1Interoffice Transport Combination - Zone 2		2	UNCNX	U1L2X	25.08	125.22	60.48	59.69	7.84		7.86				
	Additional 2-wire ISDN Loop in same DS1Interoffice Transport Combination - Zone 3		3	UNCNX	U1L2X	42.87	125.22	60.48	59.69	7.84		7.86				
	2-wire ISDN COCI (BRITE) - DS1 to DS0 Channel System combintaion- per month			UNCNX	UC1CA	2.84	6.71	4.84				7.86				
	Nonrecurring Currently Combined Network Elements Switch -As-Is Charge			UNC1X	UNCCC		8.98	8.98	11.17	11.17		7.86				
	4-WIRE DS1 DIGITAL EXTENDED LOOP WITH DEDICATED STS-1 INTEROFFICE TRANSPORT (EEL)															
	First DS1 Loop in STS1 Interoffice Transport Combination - Zone 1		1	UNC1X	USLXX	86.47	210.70	114.60	63.96	17.97		7.86				
	First DS1 Loop in STS1 Interoffice Transport Combination - Zone 2		2	UNC1X	USLXX	114.10	210.70	114.60	63.96	17.97		7.86				
	First DS1 Loop in STS1 Interoffice Transport Combination - Zone 3		3	UNC1X	USLXX	297.76	210.70	114.60	63.96	17.97		7.86				
	Interoffice Transport - Dedicated - STS1 combination - Per Mile Per Month			UNCSX	1L5XX	4.09										
	Interoffice Transport - Dedicated - STS1 combination - Facility Termination			UNCSX	U1TFS	945.79	350.56	141.58	48.00	23.39		7.86				
	STS1 to DS1 Channel System conbination per month			UNCSX	MQ3	158.20	115.48	56.53	15.12	5.30		7.86				
	DS3 Interface Unit (DS1 COCI) combination per month			UNC1X	UC1D1	11.80	6.71	4.84				7.86				
	Additional DS1Loop in STS1 Interoffice Transport Combination - Zone 1		1	UNC1X	USLXX	86.47	210.70	114.60	63.96	17.97		7.86				
	Additional DS1Loop in STS1 Interoffice Transport Combination - Zone 2		2	UNC1X	USLXX	114.10	210.70	114.60	63.96	17.97		7.86				
	Additional DS1Loop in STS1 Interoffice Transport Combination - Zone 3		3	UNC1X	USLXX	297.76	210.70	114.60	63.96	17.97		7.86				
	DS3 Interface Unit (DS1 COCI) combination per month			UNC1X	UC1D1	11.80	6.71	4.84				7.86				
	Nonrecurring Currently Combined Network Elements Switch -As-Is Charge			UNCSX	UNCCC		8.98	8.98	11.17	11.17		7.86				
	4-WIRE 56 KBPS DIGITAL EXTENDED LOOP WITH 56 KBPS INTEROFFICE TRANSPORT (EEL)															
	4-wire 56 kbps Loop/4-wire 56 kbps Interoffice Transport Combination - Zone 1		1	UNCDX	UDL56	27.59	125.22	60.48	59.69	7.84		7.86				
	4-wire 56 kbps Loop/4-wire 56 kbps Interoffice Transport Combination - Zone 2		2	UNCDX	UDL56	32.48	125.22	60.48	59.69	7.84		7.86				
	4-wire 56 kbps Loop/4-wire 56 kbps Interoffice Transport Combination - Zone 3		3	UNCDX	UDL56	36.37	125.22	60.48	59.69	7.84		7.86				
	Interoffice Transport - Dedicated - 4-wire 56 kbps combination - Per Mile			UNCDX	1L5XX	0.01										

UNBUNDLED NETWORK ELEMENTS - Kentucky													Attachment: 2		Exhibit: B	
CATEGORY	RATE ELEMENTS	Interim	Zone	BCS	USOC	RATES($)					Svc Order Submitted Elec per LSR	Svc Order Submitted Manually per LSR	Incremental Charge - Manual Svc Order vs. Electronic-1st	Incremental Charge - Manual Svc Order vs. Electronic-Add'l	Incremental Charge - Manual Svc Order vs. Electronic-Disc 1st	Incremental Charge - Manual Svc Order vs. Electronic-Disc Add'l
						Rec	Nonrecurring		Nonrecurring Disconnect		OSS Rates($)					
							First	Add'l	First	Add'l	SOMEC	SOMAN	SOMAN	SOMAN	SOMAN	SOMAN
	Interoffice Transport - Dedicated - 4-wire 56 kbps combination - Facility Termination			UNCDX	U1TD5	17.25	98.09	53.67	56.31	22.42		7.86				
	Nonrecurring Currently Combined Network Elements Switch -As-Is Charge			UNCDX	UNCCC		8.98	8.98	11.17	11.17		7.86				
4-WIRE 64 KBPS DIGITAL EXTENDED LOOP WITH 64 KBPS INTEROFFICE TRANSPORT (EEL)																
	4-wire 64 kbps Loop/4-wire 64 kbps Interoffice Transport Combination - Zone 1		1	UNCDX	UDL64	27.59	125.22	60.48	59.69	7.84		7.86				
	4-wire 64 kbps Loop/4-wire 64 kbps Interoffice Transport Combination - Zone 2		2	UNCDX	UDL64	32.48	125.22	60.48	59.69	7.84		7.86				
	4-wire 64 kbps Loop/4-wire 64 kbps Interoffice Transport Combination - Zone 3		3	UNCDX	UDL64	36.37	125.22	60.48	59.69	7.84		7.86				
	Interoffice Transport - Dedicated - 4-wire 64 kbps combination - Per Mile			UNCDX	1L5XX	0.01										
	Interoffice Transport - Dedicated - 4-wire 64 kbps combination - Facility Termination			UNCDX	U1TD6	17.25	98.09	53.67	56.31	22.42		7.86				
	Nonrecurring Currently Combined Network Elements Switch -As-Is Charge			UNCDX	UNCCC		8.98	8.98	11.17	11.17		7.86				
ADDITIONAL NETWORK ELEMENTS																
When used as a part of a currently combined facility, the non-recurrng charges do not apply, but a Switch As Is charge does apply.																
When used as ordinarilty combined network elements in Kentucky, the non-recurring charges apply and the Switch As Is Charge does not.																
Nonrecurring Currently Combined Network Elements "Switch As Is" Charge (One applies to each combination)																
	Nonrecurring Currently Combined Network Elements Switch -As-Is Charge - 2 wire/4-Wire VG			UNCVX	UNCCC		8.98	8.98	11.17	11.17		7.86				
	Nonrecurring Currently Combined Network Elements Switch -As-Is Charge - 56/64 kbps			UNCDX	UNCCC		8.98	8.98	11.17	11.17		7.86				
	Nonrecurring Currently Combined Network Elements Switch -As-Is Charge - DS1			UNC1X	UNCCC		8.98	8.98	11.17	11.17		7.86				
	Nonrecurring Currently Combined Network Elements Switch -As-Is Charge - DS3			UNC3X	UNCCC		8.98	8.98	11.17	11.17		7.86				
	Nonrecurring Currently Combined Network Elements Switch -As-Is Charge - STS1			UNCSX	UNCCC		8.98	8.98	11.17	11.17		7.86				
NOTE: Local Channel - Dedicated Transport - minimum billing period - Below DS3=one month, DS3 and above=four months																
	Local Channel - Dedicated - 2-Wire Voice Grade per month			UNCXV	ULDV2	18.57	265.78	46.96	46.79	4.98		7.86				
	Local Channel - Dedicated - 4-Wire Voice Grade per month			UNCXV	ULDV4	19.86	266.48	47.65	47.54	5.73		7.86				
	Local Channel - Dedicated - DS1 per month Zone 1		1	UNC1X	ULDF1	40.46	209.60	176.51	30.21	21.07		7.86				
	Local Channel - Dedicated -DS1 Per Month Zone 2		2	UNC1X	ULDF1	43.39	209.60	176.51	30.21	21.07		7.86				
	Local Channel - Dedicated - DS1- Per Month Zone 3		3	UNC1X	ULDF1	164.50	209.60	176.51	30.21	21.07		7.86				
	Local Channel - Dedicated - DS3 - Per Mile per month			UNC3X	1L5NC	8.74										
	Local Channel - Dedicated - DS3 - Facility Termination per month			UNC3X	ULDF3	576.05	551.38	338.08	173.00	120.42		7.86				
	Local Channel - Dedicated - STS-1- Per Mile per month			UNCSX	1L5NC	8.74										
	Local Channel - Dedicated - STS-1 - Facility Termination per month			UNCSX	ULDFS	543.24	551.38	338.08	173.00	120.42		7.86				
UNBUNDLED LOCAL EXCHANGE SWITCHING(PORTS)																
Exchange Ports																
NOTE: Although the Port Rate includes all available features in GA, KY, LA & TN, the desired features will need to be ordered using retail USOCs																
2-WIRE VOICE GRADE LINE PORT RATES (RES)																
	Exchange Ports - 2-Wire Analog Line Port- Res.			UEPSR	UEPRL	1.49	3.74	3.63	2.23	2.13		7.86				
	Exchange Ports - 2-Wire Analog Line Port with Caller ID - Res.			UEPSR	UEPRC	1.49	3.74	3.63	2.23	2.13		7.86				
	Exchange Ports - 2-Wire Analog Line Port outgoing only - Res.			UEPSR	UEPRO	1.49	3.74	3.63	2.23	2.13		7.86				
	Exchange Ports - 2-Wire VG unbundled KY extended local dialing parity Port with Caller ID - Res.			UEPSR	UEPRM	1.49	3.74	3.63	2.23	2.13		7.86				
	Exchange Ports - 2-Wire VG unbundled res, low usage line port with Caller ID (LUM)			UEPSR	UEPAP	1.49	3.74	3.63	2.23	2.13		7.86				
	Subsequent Activity			UEPSR	USASC	0.00	0.00	0.00				7.86				
FEATURES																
	All Available Vertical Features			UEPSR	UEPVF	0.00	0.00	0.00				7.86				

UNBUNDLED NETWORK ELEMENTS - Kentucky													Attachment: 2		Exhibit: B	
CATEGORY	RATE ELEMENTS	Interim	Zone	BCS	USOC	RATES($)					Svc Order Submitted Elec per LSR	Svc Order Submitted Manually per LSR	Incremental Charge - Manual Svc Order vs. Electronic-1st	Incremental Charge - Manual Svc Order vs. Electronic-Add'l	Incremental Charge - Manual Svc Order vs. Electronic-Disc 1st	Incremental Charge - Manual Svc Order vs. Electronic-Disc Add'l
						Rec	Nonrecurring		Nonrecurring Disconnect		OSS Rates($)					
							First	Add'l	First	Add'l	SOMEC	SOMAN	SOMAN	SOMAN	SOMAN	SOMAN
2-WIRE VOICE GRADE LINE PORT RATES (BUS)																
	Exchange Ports - 2-Wire Analog Line Port without Caller ID - Bus			UEPSB	UEPBL	1.49	3.74	3.63	2.23	2.13		7.86				
	Exchange Ports - 2-Wire VG unbundled Line Port with unbundled port with Caller+E484 ID - Bus.			UEPSB	UEPBC	1.49	3.74	3.63	2.23	2.13		7.86				
	Exchange Ports - 2-Wire Analog Line Port outgoing only - Bus.			UEPSB	UEPBO	1.49	3.74	3.63	2.23	2.13		7.86				
	Exchange Ports - 2-Wire VG unbundled KY extended local dialing parity Port with Caller ID - Bus.			UEPSB	UEPBM	1.49	3.74	3.63	2.23	2.13		7.86				
	Exhange Ports - 2-Wire VG unbundled incoming only port with Caller ID - Bus			UEPSB	UEPB1	1.49	3.74	3.63	2.23	2.13		7.86				
	Subsequent Activity			UEPSB	USASC	0.00	0.00	0.00				7.86				
FEATURES																
	All Available Vertical Features			UEPSB	UEPVF	0.00	0.00	0.00				7.86				
EXCHANGE PORT RATES (DID & PBX)																
	2-Wire VG Unbundled 2-Way PBX Trunk - Res			UEPSE	UEPRD	1.49	39.05	18.17	15.38	0.89		7.86				
	2-Wire VG Line Side Unbundled 2-Way PBX Trunk - Bus			UEPSP	UEPPC	1.49	39.05	18.17	15.38	0.89		7.86				
	2-Wire VG Line Side Unbundled Outward PBX Trunk - Bus			UEPSP	UEPPO	1.49	39.05	18.17	15.38	0.89		7.86				
	2-Wire VG Line Side Unbundled Incoming PBX Trunk - Bus			UEPSP	UEPP1	1.49	39.05	18.17	15.38	0.89		7.86				
	2-Wire Analog Long Distance Terminal PBX Trunk - Bus			UEPSP	UEPLD	1.49	39.05	18.17	15.38	0.89		7.86				
	2-Wire Voice Unbundled PBX LD Terminal Ports			UEPSP	UEPLD	1.49	39.05	18.17	15.38	0.89		7.86				
	2-Wire Vice Unbundled 2-Way PBX Usage Port			UEPSP	UEPXA	1.49	39.05	18.17	15.38	0.89		7.86				
	2-Wire Voice Unbundled PBX Toll Terminal Hotel Ports			UEPSP	UEPXB	1.49	39.05	18.17	15.38	0.89		7.86				
	2-Wire Voice Unbundled PBX LD DDD Terminals Port			UEPSP	UEPXC	1.49	39.05	18.17	15.38	0.89		7.86				
	2-Wire Voice Unbundled PBX LD Terminal Switchboard Port			UEPSP	UEPXD	1.49	39.05	18.17	15.38	0.89		7.86				
	2-Wire Voice Unbundled PBX LD Terminal Switchboard IDD Capable Port			UEPSP	UEPXE	1.49	39.05	18.17	15.38	0.89		7.86				
	2-Wire Voice Unbundled 2-Way PBX Kentucky Room Area Calling Port Without LUD			UEPSP	UEPXF	1.49	39.05	18.17	15.38	0.89		7.86				
	2-Wire Voice Unbundled PBX Kentucky LUD Area Calling Port			UEPSP	UEPXG	1.49	39.05	18.17	15.38	0.89		7.86				
	2-Wire Voice Unbundled PBX Kentucky Premium Callling Port			UEPSP	UEPXH	1.49	39.05	18.17	15.38	0.89		7.86				
	2-Wire Voice Unbundled 2-Way PBX Kentucky Area Callling Port Without LUD			UEPSP	UEPXJ	1.49	39.05	18.17	15.38	0.89		7.86				
	2-Wire Voice Unbundled 2-Way PBX Hotel/Hospital Economy Administrative Calling Port			UEPSP	UEPXL	1.49	39.05	18.17	15.38	0.89		7.86				
	2-Wire Voice Unbundled 2-Way PBX Hotel/Hospital Economy Room Calling Port			UEPSP	UEPXM	1.49	39.05	18.17	15.38	0.89		7.86				
	2-Wire Voice Unbundled 1-Way Outgoing PBX Hotel/Hospital Discount Room Calling Port			UEPSP	UEPXO	1.49	39.05	18.17	15.38	0.89		7.86				
	2-Wire Voice Unbundled 1-Way Outgoing PBX Measured Port			UEPSP	UEPXS	1.49	39.05	18.17	15.38	0.89		7.86				
	Subsequent Activity			UEPSP	USASC	0.00	0.00	0.00				7.86				
FEATURES																
	All Available Vertical Features			UEPSP UEPSE	UEPVF	0.00	0.00	0.00				7.86				
EXCHANGE PORT RATES (COIN)																
	Exchange Ports - Coin Port					1.49	3.74	3.63	2.23	2.13		7.86				
Local Switching Features offered with Port																
NOTE: Transmission/usage charges associated with POTS circuit switched usage will also apply to circuit switched voice and/or circuit switched data transmission by B-Channels associated with 2-wire ISDN ports.																
NOTE: Access to B Channel or D Channel Packet capabilities will be available only through BFR/New Business Request Process. Rates for the packet capabilities will be determined via the Bona Fide Request/New Business Request Process.																
	Exchange port - 4-wire ISDN trunk port -all available features included				UEPEX	101.60	188.36	95.15	61.92	22.67		7.86				
UNBUNDLED LOCAL EXCHANGE SWITCHING(PORTS)																
EXCHANGE PORT RATES (DID & PBX)																
	Exchange Ports - 2-Wire DID Port			UEPEX	UEPP2	10.51	92.18	15.82	52.16	5.30		7.86				
	Exchange Ports - DDITS Port - 4-Wire DS1 Port with DID capability			UEPDD	UEPDD	74.77	164.86	77.74	60.69	3.86		7.86				
	Exchange Ports - 2-Wire ISDN Port (See Notes below.)			UEPTX UEPSX	U1PMA	13.46	60.60	50.67	32.83	14.17		7.86				
	All Features Offered			UEPTX UEPSX	UEPVF	0.00	0.00	0.00								
NOTE: Transmission/usage charges associated with POTS circuit switched usage will also apply to circuit switched voice and/or circuit switched data transmission by B-Channels associated with 2-wire ISDN ports.																
NOTE: Access to B Channel or D Channel Packet capabilities will be available only through BFR/New Business Request Process. Rates for the packet capabilities will be determined via the Bona Fide Request/New Business Request Process.																

CATEGORY	RATE ELEMENTS	Interim	Zone	BCS	USOC	RATES($) Rec	Nonrecurring First	Nonrecurring Add'l	Nonrecurring Disconnect First	Nonrecurring Disconnect Add'l	Svc Order Submitted Elec per LSR	Svc Order Submitted Manually per LSR	Incremental Charge - Manual Svc Order vs. Electronic-1st	Incremental Charge - Manual Svc Order vs. Electronic-Add'l	Incremental Charge - Manual Svc Order vs. Electronic-Disc 1st	Incremental Charge - Manual Svc Order vs. Electronic-Disc Add'l
											OSS Rates($)					
											SOMEC	SOMAN	SOMAN	SOMAN	SOMAN	SOMAN
	Exchange Ports - 2-Wire ISDN Port -- Channel Profiles			UEPTX UEPSX	U1UMA	0.00	0.00	0.00								
	Exchange Ports - 4-Wire ISDN DS1 Port			UEPEX	UEPEX	101.60	188.36	95.15	61.92	22.67		7.86				
UNBUNDLED LOCAL SWITCHING, PORT USAGE																
End Office Switching (Port Usage)																
	End Office Switching Function, Per MOU					0.0011971										
	End Office Trunk Port - Shared, Per MOU					0.0002112										
Tandem Switching (Port Usage) (Local or Access Tandem)																
	Tandem Switching Function Per MOU					0.000194										
	Tandem Trunk Port - Shared, Per MOU					0.0002416										
Common Transport																
	Common Transport - Per Mile, Per MOU					0.000003										
	Common Transport - Facilities Termination Per MOU					0.0007466										
UNBUNDLED PORT/LOOP COMBINATIONS - COST BASED RATES																
Cost Based Rates are applied where BellSouth is required by FCC and/or State Commission rule to provide Unbundled Local Switching or Switch Ports.																
Features shall apply to the Unbundled Port/Loop Combination - Cost Based Rate section in the same manner as they are applied to the Stand-Alone Unbundled Port section of this Rate Exhibit.																
End Office and Tandem Switching Usage and Common Transport Usage rates in the Port section of this rate exhibit shall apply to all combinations of loop/port network elements except for UNE Coin Port/Loop Combinations.																
For Georgia, Kentucky, Louisiana, MIssissippi, South Carolina and Tennessee, the recurring UNE Port and Loop charges listed apply to Currently Combined and Not Currently Combined Combos. The first and additional Port nonrecurring charges apply to Not Currently Combined Combos for all states. In GA, KY, LA, MS, SC and TN these nonrecurring charges are commission ordered cost based rates and in AL, FL and NC these nonrecurring charges are Market Rates and are also listed in the Market Rate section. For Currently Combined Combos in all other states, the nonrecurring charges shall be those identified in the Nonrecurring - Currently Combined sections.																
2-WIRE VOICE GRADE LOOP WITH 2-WIRE LINE PORT (RES)																
UNE Port/Loop Combination Rates																
	2-Wire VG Loop/Port Combo - Zone 1		1			10.79										
	2-Wire VG Loop/Port Combo - Zone 2		2			15.52										
	2-Wire VG Loop/Port Combo - Zone 3		3			31.74										
UNE Loop Rates																
	2-Wire Voice Grade Loop (SL1) - Zone 1		1	UEPRX	UEPLX	9.64										
	2-Wire Voice Grade Loop (SL1) - Zone 2		2	UEPRX	UEPLX	14.37										
	2-Wire Voice Grade Loop (SL1) - Zone 3		3	UEPRX	UEPLX	30.59										
2-Wire Voice Grade Line Port Rates (Res)																
	2-Wire voice unbundled port - residence			UEPRX	UEPRL	1.15	21.29	15.49	2.85	2.67		7.86				
	2-Wire voice unbundled port with Caller ID - res			UEPRX	UEPRC	1.15	21.29	15.49	2.85	2.67		7.86				
	2-Wire voice unbundled port outgoing only - res			UEPRX	UEPRO	1.15	21.29	15.49	2.85	2.67		7.86				
	2-Wire voice Grade unbundled Kentucky extended local dialing parity port with Caller ID - res			UEPRX	UEPRM	1.15	21.29	15.49	2.85	2.67		7.86				
	2-Wire voice unbundles res, low usage line port with Caller ID (LUM)			UEPRX	UEPAP	1.15	21.29	15.49	2.85	2.67		7.86				
FEATURES																
	All Features Offered			UEPRX	UEPVF	0.00	0.00	0.00				7.86				
LOCAL NUMBER PORTABILITY																
	Local Number Portability (1 per port)			UEPRX	LNPCX	0.35										
NONRECURRING CHARGES (NRCs) - CURRENTLY COMBINED																
	2-Wire Voice Grade Loop / Line Port Combination - Conversion - Switch-as-is			UEPRX	USAC2		0.10	0.10				7.86				
	2-Wire Voice Grade Loop / Line Port Combination - Conversion - Switch with change			UEPRX	USACC		0.10	0.10				7.86				
ADDITIONAL NRCs																
	2-Wire Voice Grade Loop/Line Port Combination - Subsequent Activity			UEPRX	USAS2	0.00	0.00	0.00				7.86				
2-WIRE VOICE GRADE LOOP WITH 2-WIRE LINE PORT (BUS)																
UNE Port/Loop Combination Rates																
	2-Wire VG Loop/Port Combo - Zone 1		1			10.79										
	2-Wire VG Loop/Port Combo - Zone 2		2			15.52										
	2-Wire VG Loop/Port Combo - Zone 3		3			31.74										
UNE Loop Rates																
	2-Wire Voice Grade Loop (SL1) - Zone 1		1	UEPBX	UEPLX	9.64										
	2-Wire Voice Grade Loop (SL1) - Zone 2		2	UEPBX	UEPLX	14.37										
	2-Wire Voice Grade Loop (SL1) - Zone 3		3	UEPBX	UEPLX	30.59										
2-Wire Voice Grade Line Port (Bus)																
	2-Wire voice unbundled port without Caller ID - bus			UEPBX	UEPBL	1.15	21.29	15.49	2.85	2.67		7.86				

UNBUNDLED NETWORK ELEMENTS - Kentucky														Attachment: 2		Exhibit: B	
CATEGORY		RATE ELEMENTS	Interim	Zone	BCS	USOC	RATES($)					Svc Order Submitted Elec per LSR	Svc Order Submitted Manually per LSR	Incremental Charge - Manual Svc Order vs. Electronic-1st	Incremental Charge - Manual Svc Order vs. Electronic-Add'l	Incremental Charge - Manual Svc Order vs. Electronic-Disc 1st	Incremental Charge - Manual Svc Order vs. Electronic-Disc Add'l
							Rec	Nonrecurring		Nonrecurring Disconnect		OSS Rates($)					
								First	Add'l	First	Add'l	SOMEC	SOMAN	SOMAN	SOMAN	SOMAN	SOMAN
		2-Wire voice unbundled port with Caller + E484 ID - bus			UEPBX	UEPBC	1.15	21.29	15.49	2.85	2.67		7.86				
		2-Wire voice unbundled port outgoing only - bus			UEPBX	UEPBO	1.15	21.29	15.49	2.85	2.67		7.86				
		2-Wire voice Grade unbundled Kentucky extended local dialing parity port with Caller ID - bus			UEPBX	UEPBM	1.15	21.29	15.49	2.85	2.67		7.86				
		2-Wire voice unbundled incoming only port with Caller ID - Bus			UEPBX	UPEB1	1.15	21.29	15.49	2.85	2.67		7.86				
	LOCAL NUMBER PORTABILITY																
		Local Number Portability (1 per port)			UEPBX	LNPCX	0.35										
	FEATURES																
		All Features Offered			UEPBX	UEPVF	0.00	0.00	0.00				7.86				
	NONRECURRING CHARGES (NRCs) - CURRENTLY COMBINED																
		2-Wire Voice Grade Loop / Line Port Combination - Conversion - Switch-as-is			UEPBX	USAC2		0.10	0.10				7.86				
		2-Wire Voice Grade Loop / Line Port Combination - Conversion - Switch with change			UEPBX	USACC		0.10	0.10				7.86				
	ADDITIONAL NRCs																
		2-Wire Voice Grade Loop/Line Port Combination - Subsequent Activity			UEPBX	USAS2		0.00	0.00				7.86				
	2-WIRE VOICE GRADE LOOP WITH 2-WIRE LINE PORT (RES - PBX)																
	UNE Port/Loop Combination Rates																
		2-Wire VG Loop/Port Combo - Zone 1		1			10.79										
		2-Wire VG Loop/Port Combo - Zone 2		2			15.52										
		2-Wire VG Loop/Port Combo - Zone 3		3			31.74										
	UNE Loop Rates																
		2-Wire Voice Grade Loop (SL 1) - Zone 1		1	UEPRG	UEPLX	9.64										
		2-Wire Voice Grade Loop (SL 1) - Zone 2		2	UEPRG	UEPLX	14.37										
		2-Wire Voice Grade Loop (SL 1) - Zone 3		3	UEPRG	UEPLX	30.59										
	2-Wire Voice Grade Line Port Rates (RES - PBX)																
		2-Wire VG Unbundled Combination 2-Way PBX Trunk Port - Res			UEPRG	UEPRD	1.15	21.29	15.49	2.85	2.67		7.86				
	LOCAL NUMBER PORTABILITY																
		Local Number Portability (1 per port)			UEPRG	LNPCP	3.15	0.00	0.00				7.86				
	FEATURES																
		All Features Offered			UEPRG	UEPVF	0.00	0.00	0.00				7.86				
	NONRECURRING CHARGES (NRCs) - CURRENTLY COMBINED																
		2-Wire Voice Grade Loop/ Line Port Combination (PBX) - Conversion - Switch-As-Is			UEPRG	USAC2		8.45	1.91				7.86				
		2-Wire Voice Grade Loop/ Line Port Combination (PBX) - Conversion - Switch with Change			UEPRG	USACC		8.45	1.91				7.86				
	ADDITIONAL NRCs																
		2-Wire Voice Grade Loop/ Line Port Combination (PBX) - Subsequent Activity			UEPRG	USAS2	0.00	0.00	0.00				7.86				
		PBX Subsequent Activity - Change/Rearrange Multiline Hunt Group						7.86	7.86				7.86				
	2-WIRE VOICE GRADE LOOP WITH 2-WIRE LINE PORT (BUS - PBX)																
	UNE Port/Loop Combination Rates																
		2-Wire VG Loop/Port Combo - Zone 1		1			10.79										
		2-Wire VG Loop/Port Combo - Zone 2		2			15.52										
		2-Wire VG Loop/Port Combo - Zone 3		3			31.74										
	UNE Loop Rates																
		2-Wire Voice Grade Loop (SL 1) - Zone 1		1	UEPPX	UEPLX	9.64										
		2-Wire Voice Grade Loop (SL 1) - Zone 2		2	UEPPX	UEPLX	14.37										
		2-Wire Voice Grade Loop (SL 1) - Zone 3		3	UEPPX	UEPLX	30.59										
	2-Wire Voice Grade Line Port Rates (BUS - PBX)																
		Line Side Unbundled Combination 2-Way PBX Trunk Port - Bus			UEPPX	UEPPC	1.15	21.29	15.49	2.85	2.67		7.86				
		Line Side Unbundled Outward PBX Trunk Port - Bus			UEPPX	UEPPO	1.15	21.29	15.49	2.85	2.67		7.86				
		Line Side Unbundled Incoming PBX Trunk Port - Bus			UEPPX	UEPP1	1.15	21.29	15.49	2.85	2.67		7.86				
		2-Wire Voice Unbundled PBX LD Terminal Ports			UEPPX	UEPLD	1.15	21.29	15.49	2.85	2.67		7.86				
		2-Wire Voice Unbundled 2-Way Combination PBX Usage Port			UEPPX	UEPXA	1.15	21.29	15.49	2.85	2.67		7.86				

UNBUNDLED NETWORK ELEMENTS - Kentucky													Attachment: 2		Exhibit: B	
CATEGORY	RATE ELEMENTS	Interim	Zone	BCS	USOC	RATES($)					Svc Order Submitted Elec per LSR	Svc Order Submitted Manually per LSR	Incremental Charge - Manual Svc Order vs. Electronic-1st	Incremental Charge - Manual Svc Order vs. Electronic-Add'l	Incremental Charge - Manual Svc Order vs. Electronic-Disc 1st	Incremental Charge - Manual Svc Order vs. Electronic-Disc Add'l
						Rec	Nonrecurring		Nonrecurring Disconnect		OSS Rates($)					
							First	Add'l	First	Add'l	SOMEC	SOMAN	SOMAN	SOMAN	SOMAN	SOMAN
	2-Wire Voice Unbundled PBX Toll Terminal Hotel Ports			UEPPX	UEPXB	1.15	21.29	15.49	2.85	2.67		7.86				
	2-Wire Voice Unbundled PBX LD DDD Terminals Port			UEPPX	UEPXC	1.15	21.29	15.49	2.85	2.67		7.86				
	2-Wire Voice Unbundled PBX LD Terminal Switchboard Port			UEPPX	UEPXD	1.15	21.29	15.49	2.85	2.67		7.86				
	2-Wire Voice Unbundled PBX LD Terminal Switchboard IDD Capable Port			UEPPX	UEPXE	1.15	21.29	15.49	2.85	2.67		7.86				
	2-Wire Voice Unbundled 2-Way PBX Kentucky Room Area Calling Port without LUD			UEPPX	UEPXF	1.15	21.29	15.49	2.85	2.67		7.86				
	2-Wire Voice Unbundled PBX Kentucky LUD Area Calling Port			UEPPX	UEPXG	1.15	21.29	15.49	2.85	2.67		7.86				
	2-Wire Voice Unbundled PBX Kentucky Premium Calling Port			UEPPX	UEPXH	1.15	21.29	15.49	2.85	2.67		7.86				
	2-Wire Voice Unbundled 2-Way Kentucky Area Calling Port without LUD			UEPPX	UEPXJ	1.15	21.29	15.49	2.85	2.67		7.86				
	2-Wire Voice Unbundled 2-Way PBX Hotel/Hospital Economy Administrative Calling Port			UEPPX	UEPXL	1.15	21.29	15.49	2.85	2.67		7.86				
	2-Wire Voice Unbundled 2-Way PBX Hotel/Hospital Economy Room Calling Port			UEPPX	UEPXM	1.15	21.29	15.49	2.85	2.67		7.86				
	2-Wire Voice Unbundled 1-Way Outgoing PBX Hotel/Hospital Discount Room Calling Port			UEPPX	UEPXO	1.15	21.29	15.49	2.85	2.67		7.86				
	2-Wire Voice Unbundled 1-Way Outgoing PBX Measured Port			UEPPX	UEPXS	1.15	21.29	15.49	2.85	2.67		7.86				
LOCAL NUMBER PORTABILITY																
	Local Number Portability (1 per port)			UEPPX	LNPCP	3.15	0.00	0.00								
FEATURES																
	All Features Offered			UEPPX	UEPVF	0.00	0.00	0.00				7.86				
NONRECURRING CHARGES (NRCs) - CURRENTLY COMBINED																
	2-Wire Voice Grade Loop/ Line Port Combination (PBX) - Conversion - Switch-As-Is			UEPPX	USAC2		8.45	1.91				7.86				
	2-Wire Voice Grade Loop/ Line Port Combination (PBX) - Conversion - Switch with Change			UEPPX	USACC		8.45	1.91				7.86				
ADDITIONAL NRCs																
	2-Wire Voice Grade Loop/ Line Port Combination (PBX) - Subsequent Activity			UEPPX	USAS2	0.00	0.00	0.00				7.86				
	PBX Subsequent Activity - Change/Rearrange Multiline Hunt Group						7.86	7.86				7.86				
2-WIRE VOICE GRADE LOOP WITH 2-WIRE ANALOG LINE COIN PORT																
UNE Port/Loop Combination Rates																
	2-Wire VG Coin Port/Loop Combo – Zone 1		1			10.79										
	2-Wire VG Coin Port/Loop Combo – Zone 2		2			15.52										
	2-Wire VG Coin Port/Loop Combo – Zone 3		3			31.74										
UNE Loop Rates																
	2-Wire Voice Grade Loop (SL1) - Zone 1		1	UEPCO	UEPLX	9.64										
	2-Wire Voice Grade Loop (SL1) - Zone 2		2	UEPCO	UEPLX	14.37										
	2-Wire Voice Grade Loop (SL1) - Zone 3		3	UEPCO	UEPLX	30.59										
2-Wire Voice Grade Line Ports (COIN)																
	2-Wire Coin 2-Way without Operator Screening and without Blocking (AL, KY, LA, MS)			UEPCO	UEPRF	1.15	21.29	15.49	2.85	2.67		7.86				
	2-Wire Coin 2-Way with Operator Screening (AL, KY)			UEPCO	UEPRE	1.15	21.29	15.49	2.85	2.67		7.86				
	2-Wire Coin 2-Way with Operator Screening and Blocking: 011, 900/976, 1+DDD (AL, KY, LA, MS)			UEPCO	UEPRA	1.15	21.29	15.49	2.85	2.67		7.86				
	2-Wire Coin 2-Way with Operator Screening and 011 Blocking (KY)			UEPCO	UEPKA	1.15	21.29	15.49	2.85	2.67		7.86				
	2-Wire Coin 2-Way with Operator Screening & Blocking: 900/976, 1+DDD, 011+, & Local (AL, KY, LA, MS)			UEPCO	UEPCD	1.15	21.29	15.49	2.85	2.67		7.86				
	2-Wire Coin Outward without Blocking and without Operator Screening (KY, LA, MS)			UEPCO	UEPRN	1.15	21.29	15.49	2.85	2.67		7.86				
	2-Wire Coin Outward with Operator Screening and 011 Blocking (GA, KY, MS)			UEPCO	UEPRJ	1.15	21.29	15.49	2.85	2.67		7.86				
	2-Wire Coin Outward with Operator Screening and Blocking: 011, 900/976, 1+DDD (AL, KY, LA, MS)			UEPCO	UEPRH	1.15	21.29	15.49	2.85	2.67		7.86				
	2-Wire Coin Outward Operator Screening & Blocking: 900/976, 1+DDD, 011+, and Local (AL, KY, LA, MS)			UEPCO	UEPCN	1.15	21.29	15.49	2.85	2.67		7.86				

UNBUNDLED NETWORK ELEMENTS - Kentucky													Attachment: 2		Exhibit: B	
CATEGORY	RATE ELEMENTS	Interim	Zone	BCS	USOC	RATES($)					Svc Order Submitted Elec per LSR	Svc Order Submitted Manually per LSR	Incremental Charge - Manual Svc Order vs. Electronic-1st	Incremental Charge - Manual Svc Order vs. Electronic-Add'l	Incremental Charge - Manual Svc Order vs. Electronic-Disc 1st	Incremental Charge - Manual Svc Order vs. Electronic-Disc Add'l
						Rec	Nonrecurring		Nonrecurring Disconnect		OSS Rates($)					
							First	Add'l	First	Add'l	SOMEC	SOMAN	SOMAN	SOMAN	SOMAN	SOMAN
	2-Wire 2-Way Smartline with 900/976 (all states except LA)			UEPCO	UEPCK	2.91						7.86				
	2-Wire Coin Outward Smartline with 900/976 (all states except LA)			UEPCO	UEPCR	2.91						7.86				
ADDITIONAL UNE COIN PORT/LOOP (RC)																
	UNE Coin Port/Loop Combo Usage (Flat Rate)			UEPCO	URECU	2.57	21.29	15.49	2.85	2.67						
LOCAL NUMBER PORTABILITY																
	Local Number Portability (1 per port)			UEPCO	LNPCX	0.35										
NONRECURRING CHARGES - CURRENTLY COMBINED																
	2-Wire Voice Grade Loop / Line Port Combination - Conversion - Switch-as-is			UEPCO	USAC2		0.10	0.10				7.86				
	2-Wire Voice Grade Loop / Line Port Combination - Conversion - Switch with change			UEPCO	USACC		0.10	0.10				7.86				
ADDITIONAL NRCs																
	2-Wire Voice Grade Loop/Line Port Combination - Subsequent Activity			UEPCO	USAS2		0.00	0.00				7.86				
UNBUNDLED REMOTE CALL FORWARDING - RES																
Non-Recurring																
UNBUNDLED REMOTE CALL FORWARDING - Bus																
	Unbundled Remote Call Forwarding, InterState/Intra LATA-Bus			UEPVB	UEPVJ	1.49	3.74	3.63				7.86				
Non-Recurring																
2-WIRE VOICE LOOP/ 2WIRE VOICE GRADE IO TRANSPORT/ 2-WIRE LINE PORT (RES)																
2-WIRE VOICE LOOP/ 2WIRE VOICE GRADE IO TRANSPORT/ 2-WIRE LINE PORT (BUS)																
UNBUNDLED PORT/LOOP COMBINATIONS - COST BASED RATES																
2-WIRE VOICE GRADE LOOP- BUS ONLY - WITH 2-WIRE DID TRUNK PORT																
UNE Port/Loop Combination Rates																
	2-Wire VG Loop/2-Wire DID Trunk Port Combo - UNE Zone 1		1			21.30										
	2-Wire VG Loop/2-Wire DID Trunk Port Combo - UNE Zone 2		2			26.08										
	2-Wire VG Loop/2-Wire DID Trunk Port Combo - UNE Zone 3		3			41.85										
UNE Loop Rates																
	2-Wire Analog Voice Grade Loop - (SL2) - UNE Zone 1		1	UEPPX	UECD1	12.67						7.86				
	2-Wire Analog Voice Grade Loop - (SL2) - UNE Zone 2		2	UEPPX	UECD1	17.45						7.86				
	2-Wire Analog Voice Grade Loop - (SL2) - UNE Zone 3		3	UEPPX	UECD1	33.22						7.86				
UNE Port Rate																
	Exchange Ports - 2-Wire DID Port			UEPPX	UEPD1	8.63	336.11	27.75	132.37	9.31		7.86				
NONRECURRING CHARGES - CURRENTLY COMBINED																
	2-Wire Voice Grade Loop / 2-Wire DID Trunk Port Conversion with BellSouth Allowable Changes			UEPPX	USA1C		7.85	1.87				7.86				
ADDITIONAL NRCs																
	2-Wire DID Subsequent Activity - Add Trunks, Per Trunk			UEPPX	USAS1		32.25	32.25				7.86				
Telephone Number/Trunk Group Establisment Charges																
	DID Trunk Termination (One Per Port)			UEPPX	NDT	0.00	0.00	0.00				7.86				
	Additional DID Numbers for each Group of 20 DID Numbers			UEPPX	ND4	0.00	0.00	0.00				7.86				
	DID Numbers, Non- consecutive DID Numbers , Per Number			UEPPX	ND5	0.00	0.00	0.00				7.86				
	Reserve Non-Consecutive DID numbers			UEPPX	ND6	0.00	0.00	0.00				7.86				
	Reserve DID Numbers			UEPPX	NDV	0.00	0.00	0.00				7.86				
LOCAL NUMBER PORTABILITY																
	Local Number Portability (1 per port)			UEPPX	LNPCP	3.15	0.00	0.00								
2-WIRE ISDN DIGITAL GRADE LOOP WITH 2-WIRE ISDN DIGITAL LINE SIDE PORT																
UNE Port/Loop Combination Rates																
	2W ISDN Digital Grade Loop/2W ISDN Digital Line Side Port - UNE Zone 1		1	UEPPB UEPPR		25.69										
	2W ISDN Digital Grade Loop/2W ISDN Digital Line Side Port - UNE Zone 2		2	UEPPB UEPPR		31.92										
	2W ISDN Digital Grade Loop/2W ISDN Digital Line Side Port - UNE Zone 3		3	UEPPB UEPPR		50.21										
UNE Loop Rates																
	2-Wire ISDN Digital Grade Loop - UNE Zone 1		1	UEPPB UEPPR	USL2X	16.10						7.86				
	2-Wire ISDN Digital Grade Loop - UNE Zone 2		2	UEPPB UEPPR	USL2X	22.33						7.86				

CATEGORY	RATE ELEMENTS	Interim	Zone	BCS	USOC	RATES($) Rec	Nonrecurring First	Nonrecurring Add'l	Nonrecurring Disconnect First	Nonrecurring Disconnect Add'l	Svc Order Submitted Elec per LSR	Svc Order Submitted Manually per LSR	Incremental Charge - Manual Svc Order vs. Electronic-1st	Incremental Charge - Manual Svc Order vs. Electronic-Add'l	Incremental Charge - Manual Svc Order vs. Electronic-Disc 1st	Incremental Charge - Manual Svc Order vs. Electronic-Disc Add'l
											OSS Rates($)					
											SOMEC	SOMAN	SOMAN	SOMAN	SOMAN	SOMAN
	2-Wire ISDN Digital Grade Loop - UNE Zone 3		3	UEPPB UEPPR	USL2X	40.63						7.86				
	UNE Port Rate															
	Exchange Port - 2-Wire ISDN Line Side Port			UEPPB UEPPR	UEPPB	9.59	320.53	289.13	92.19	17.56		7.86				
	NONRECURRING CHARGES - CURRENTLY COMBINED															
	2-Wire ISDN Digital Grade Loop / 2-Wire ISDN Line Side Port Combination - Conversion			UEPPB UEPPR	USACB	0.00	22.77	17.00				7.86				
	ADDITIONAL NRCs															
	LOCAL NUMBER PORTABILITY															
	Local Number Portability (1 per port)			UEPPB UEPPR	LNPCX	0.35	0.00	0.00								
	B-CHANNEL USER PROFILE ACCESS:															
	CVS/CSD (DMS/5ESS)			UEPPB UEPPR	U1UCA	0.00	0.00	0.00								
	CVS (EWSD)			UEPPB UEPPR	U1UCB	0.00	0.00	0.00								
	CSD			UEPPB UEPPR	U1UCC	0.00	0.00	0.00								
	B-CHANNEL AREA PLUS USER PROFILE ACCESS: (AL,KY,LA,MS SC,MS, & TN)															
	CVS/CSD (DMS/5ESS)			UEPPB UEPPR	U1UCD	0.00	0.00	0.00								
	CVS (EWSD)			UEPPB UEPPR	U1UCE	0.00	0.00	0.00								
	CSD			UEPPB UEPPR	U1UCF	0.00	0.00	0.00								
	USER TERMINAL PROFILE															
	User Terminal Profile (EWSD only)			UEPPB UEPPR	U1UMA	0.00	0.00	0.00								
	VERTICAL FEATURES															
	All Vertical Features - One per Channel B User Profile			UEPPB UEPPR	UEPVF	0.00	0.00	0.00								
	INTEROFFICE CHANNEL MILEAGE															
	Interoffice Channel mileage each, including first mile and facilities termination			UEPPB UEPPR	M1GNC	29.12	47.34	31.78	22.77	8.75		7.86				
	Interoffice Channel mileage each, additional mile			UEPPB UEPPR	M1GNM	0.01	0.00	0.00				7.86				
	4-WIRE DS1 DIGITAL LOOP WITH 4-WIRE ISDN DS1 DIGITAL TRUNK PORT															
	UNE Port/Loop Combination Rates															
	4W DS1 Digital Loop/4W ISDN DS1 Digital Trunk Port - UNE Zone 1		1	UEPPP		170.06										
	4W DS1 Digital Loop/4W ISDN DS1 Digital Trunk Port - UNE Zone 2		2	UEPPP		197.70										
	4W DS1 Digital Loop/4W ISDN DS1 Digital Trunk Port - UNE Zone 3		3	UEPPP		381.35										
	UNE Loop Rates															
	4-Wire DS1 Digital Loop - UNE Zone 1		1	UEPPP	USL4P	86.47						7.86				
	4-Wire DS1 Digital Loop - UNE Zone 2		2	UEPPP	USL4P	114.10						7.86				
	4-Wire DS1 Digital Loop - UNE Zone 3		3	UEPPP	USL4P	297.76						7.86				
	UNE Port Rate															
	Exchange Ports - 4-Wire ISDN DS1 Port			UEPPP	UEPPP	83.59	736.16	382.74	159.48	48.82		7.86				
	NONRECURRING CHARGES - CURRENTLY COMBINED															
	4-Wire DS1 Digital Loop / 4-Wire ISDN DS1 Digital Trunk Port Combination - Conversion -Switch-as-is			UEPPP	USACP	0.00	81.70	1.37				7.86				
	ADDITIONAL NRCs															
	4-Wire DS1 Loop/4-W ISDN Digtl Trk Port - Subsqt Actvy-Inward/two way tel nos within Std Allowance (except NC)			UEPPP	PR7TF		0.54					7.86				
	4-Wire DS1 Loop / 4-Wire ISDN DS1 Digital Trunk Port - Outward Tel Numbers (All States except NC)			UEPPP	PR7TO		12.71	12.71				7.86				
	4-Wire DS1 Loop / 4-Wire ISDN DS1 Digital Trk Port - Subsequent Inward Tel Nos Above Std Allowance			UEPPP	PR7ZT		25.41	25.41				7.86				
	LOCAL NUMBER PORTABILITY															
	Local Number Portability (1 per port)			UEPPP	LNPCN	1.75										
	INTERFACE (Provsioning Only)															
	Voice/Data			UEPPP	PR71V	0.00	0.00	0.00								
	Digital Data			UEPPP	PR71D	0.00	0.00	0.00								
	Inward Data			UEPPP	PR71E	0.00	0.00	0.00								
	New or Additional "B" Channel															
	New or Additional - Voice/Data B Channel			UEPPP	PR7BV	0.00	15.48					7.86				
	New or Additional - Digital Data B Channel			UEPPP	PR7BF	0.00	15.48					7.86				
	New or Additional Inward Data B Channel			UEPPP	PR7BD	0.00	15.48					7.86				

UNBUNDLED NETWORK ELEMENTS - Kentucky													Attachment: 2		Exhibit: B	
CATEGORY	RATE ELEMENTS	Interim	Zone	BCS	USOC	RATES($)					Svc Order Submitted Elec per LSR	Svc Order Submitted Manually per LSR	Incremental Charge - Manual Svc Order vs. Electronic-1st	Incremental Charge - Manual Svc Order vs. Electronic-Add'l	Incremental Charge - Manual Svc Order vs. Electronic-Disc 1st	Incremental Charge - Manual Svc Order vs. Electronic-Disc Add'l
						Rec	Nonrecurring		Nonrecurring Disconnect		OSS Rates($)					
							First	Add'l	First	Add'l	SOMEC	SOMAN	SOMAN	SOMAN	SOMAN	SOMAN
CALL TYPES																
	Inward			UEPPP	PR7C1	0.00	0.00	0.00								
	Outward			UEPPP	PR7C0	0.00	0.00	0.00								
	Two-way			UEPPP	PR7CC	0.00	0.00	0.00								
Interoffice Channel Mileage																
	Fixed Each Including First Mile			UEPPP	1LN1A	96.27	105.52	98.46	23.09	20.49		7.86				
	Each Airline-Fractional Additional Mile			UEPPP	1LN1B	0.23										
4-WIRE DS1 DIGITAL LOOP WITH 4-WIRE DDITS TRUNK PORT																
UNE Port/Loop Combination Rates																
	4W DS1 Digital Loop/4W DDITS Trunk Port - UNE Zone 1		1	UEPDC		147.99										
	4W DS1 Digital Loop/4W DDITS Trunk Port - UNE Zone 2		2	UEPDC		175.62										
	4W DS1 Digital Loop/4W DDITS Trunk Port - UNE Zone 3		3	UEPDC		359.28										
UNE Loop Rates																
	4-Wire DS1 Digital Loop - UNE Zone 1		1	UEPDC	USLDC	86.47						7.86				
	4-Wire DS1 Digital Loop - UNE Zone 2		2	UEPDC	USLDC	114.10						7.86				
	4-Wire DS1 Digital Loop - UNE Zone 3		3	UEPDC	USLDC	297.76						7.86				
UNE Port Rate																
	4-Wire DDITS Digital Trunk Port			UEPDC	UDD1T	61.52	780.61	375.52	176.19	16.98		7.86				
NONRECURRING CHARGES - CURRENTLY COMBINED																
	4-Wire DS1 Digital Loop / 4-Wire DDITS Trunk Port Combination - Switch-as-is			UEPDC	USAC4		92.84	46.70				7.86				
	4-Wire DS1 Digital Loop / 4-Wire DDITS Trunk Port Combination - Conversion with DS1 Changes			UEPDC	USAWA		92.84	46.70				7.86				
	4-Wire DS1 Digital Loop / 4-Wire DDITS Trunk Port Combination - Conversion with Change - Trunk			UEPDC	USAWB		92.84	46.70				7.86				
ADDITIONAL NRCs																
	4-Wire DS1 Loop / 4-Wire DDITS Trunk Port - NRC - Subsequent Channel Activation/Chan - 2-Way Trunk			UEPDC	UDTTA		15.09	15.09				7.86				
	4-Wire DS1 Loop / 4-Wire DDITS Trunk Port - Subsequent Channel Activation/Chan - 1-Way Outward Trunk			UEPDC	UDTTB		15.09	15.09				7.86				
	4-Wire DS1 Loop / 4-Wire DDITS Trunk Port - Subsqnt Channel Activation/Chan Inward Trunk w/out DID			UEPDC	UDTTC		15.09	15.09				7.86				
	4-Wire DS1 Loop / 4-Wire DDITS Trunk Port - Subsqnt Chan Activation Per Chan - Inward Trunk with DID			UEPDC	UDTTD		15.09	15.09				7.86				
	4-Wire DS1 Loop / 4-Wire DDITS Trunk Port - Subsqnt Chan Activation / Chan - 2-Way DID w User Trans			UEPDC	UDTTE		15.09	15.09				7.86				
BIPOLAR 8 ZERO SUBSTITUTION																
	B8ZS -Superframe Format			UEPDC	CCOSF		0.00	730.00				7.86				
	B8ZS - Extended Superframe Format			UEPDC	CCOEF		0.00	730.00				7.86				
Alternate Mark Inversion																
	AMI -Superframe Format			UEPDC	MCOSF		0.00	0.00								
	AMI - Extended SuperFrame Format			UEPDC	MCOPO		0.00	0.00								
Telephone Number/Trunk Group Establisment Charges																
	Telephone Number for 2-Way Trunk Group			UEPDC	UDTGX	0.00	0.00	0.00				7.86				
	Telephone Number for 1-Way Outward Trunk Group			UEPDC	UDTGY	0.00		0.00				7.86				
	Telephone Number for 1-Way Inward Trunk Group Without DID			UEPDC	UDTGZ	0.00	0.00	0.00				7.86				
	DID Numbers for each Group of 20 DID Numbers			UEPDC	ND4	0.00	0.00	0.00				7.86				
	DID Numbers, Non- consecutive DID Numbers , Per Number			UEPDC	ND5	0.00	0.00	0.00				7.86				
	Reserve Non-Consecutive DID Nos.			UEPDC	ND6	0.00	0.00	0.00				7.86				
	Reserve DID Numbers			UEPDC	NDV	0.00	0.00	0.00				7.86				
Dedicated DS1 (Interoffice Channel Mileage) - FX/FCO for 4-Wire DS1 Digital Loop with 4-Wire DDITS Trunk Port																
	Interoffice Channel Mileage - Fixed rate 0-8 miles (Facilities Termination)			UEPDC	1LNO1	96.04	105.52	98.46	23.09	20.49		7.86				
	Interoffice Channel Mileage - Additional rate per mile - 0-8 miles			UEPDC	1LNOA	0.23	0.00	0.00								
	Interoffice Channel Mileage - Fixed rate 9-25 miles (Facilities Termination)			UEPDC	1LNO2	0.00	0.00	0.00								
	Interoffice Channel Mileage - Additional rate per mile - 9-25 miles			UEPDC	1LNOB	0.45	0.00	0.00								

CATEGORY	RATE ELEMENTS	Interim	Zone	BCS	USOC	RATES($) Rec	Nonrecurring First	Nonrecurring Add'l	Nonrecurring Disconnect First	Nonrecurring Disconnect Add'l	Svc Order Submitted Elec per LSR	Svc Order Submitted Manually per LSR	Incremental Charge - Manual Svc Order vs. Electronic-1st	Incremental Charge - Manual Svc Order vs. Electronic-Add'l	Incremental Charge - Manual Svc Order vs. Electronic-Disc 1st	Incremental Charge - Manual Svc Order vs. Electronic-Disc Add'l
											OSS Rates($)					
							First	Add'l	First	Add'l	SOMEC	SOMAN	SOMAN	SOMAN	SOMAN	SOMAN
	Interoffice Channel Mileage - Fixed rate 25+ miles (Facilities Termination)			UEPDC	1LNO3	0.00	0.00	0.00								
	Interoffice Channel Mileage - Additional rate per mile - 25+ miles			UEPDC	1LNOC	0.45	0.00	0.00								
	Local Number Portability, per DS0 Activated			UEPDC	LNPCP	3.15	0.00	0.00								
	Central Office Termininating Point			UEPDC	CTG	0.00										
	4-WIRE DS1 LOOP WITH CHANNELIZATION WITH PORT															
	System is 1 DS1 Loop, 1 D4 Channel Bank, and up to 24 Feature Activations															
	Each System can have up to 24 combinations of rates depending on type and number of ports used															
	UNE DS1 Loop															
	4-Wire DS1 Loop - UNE Zone 1		1	UEPMG	USLDC	86.47	0.00	0.00								
	4-Wire DS1 Loop - UNE Zone 2		2	UEPMG	USLDC	114.10	0.00	0.00								
	4-Wire DS1 Loop - UNE Zone 3		3	UEPMG	USLDC	297.76	0.00	0.00								
	UNE DSO Channelization Capacities (D4 Channel Bank Configurations)															
	24 DSO Channel Capacity - 1 per DS1			UEPMG	VUM24	111.16	0.00	0.00				7.86				
	48 DSO Channel Capacity - 1 per 2 DS1s			UEPMG	VUM48	222.32	0.00	0.00				7.86				
	96 DSO Channel Capacity -1per 4 DS1s			UEPMG	VUM96	444.64	0.00	0.00				7.86				
	144 DS0 Channel Capacity - 1 per 6 DS1s			UEPMG	VUM14	666.96	0.00	0.00				7.86				
	192 DS0 Channel Capacity -1 per 8 DS1s			UEPMG	VUM19	889.28	0.00	0.00				7.86				
	240 DS0 Channel Capacity - 1 per 10 DS1s			UEPMG	VUM20	1,111.60	0.00	0.00				7.86				
	288 DS0 Channel Capacity - 1 per 12 DS1s			UEPMG	VUM28	1,333.92	0.00	0.00				7.86				
	384 DS0 Channel Capacity - 1 per 16 DS1s			UEPMG	VUM38	1,778.56	0.00	0.00				7.86				
	480 DS0 Channel Capacity - 1 per 20 DS1s			UEPMG	VUM40	2,223.20	0.00	0.00				7.86				
	576 DS0 Channel Capacity -1 per 24 DS1s			UEPMG	VUM57	2,667.84	0.00	0.00				7.86				
	672 DS0 Channel Capacity - 1 per 28 DS1s			UEPMG	VUM67	3,112.48	0.00	0.00				7.86				
	Non-Recurring Charges (NRC) Associated with 4-Wire DS1 Loop with Channeliztion with Port - Conversion Charge Based on a System															
	A Minimum System configuration is One (1) DS1, One (1) D4 Channel Bank, and Up To 24 DSO Ports with Feature Activations.															
	Multiples of this configuration functioning as one are considered Add'l after the minimum system configuration is counted.															
	NRC - Conversion (Currently Combined) with or without BellSouth Allowed Changes			UEPMG	USAC4	0.00	94.30	4.24				7.86				
	System Additions at End User Locations Where 4-Wire DS1 Loop with Channelization with Port Combination Currently Exists and															
	New (Not Currently Combined) In GA, KY, LA, MS & TN Only															
	1 DS1/D4 Channel Bank - Add NRC for each Port and Assoc Fea Activation - New GA, LA, KY, MS, &TN Only			UEPMG	VUMD4	0.00	718.89	469.86	149.83	17.77		7.86				
	Bipolar 8 Zero Substitution															
	Clear Channel Capability Format, superframe - Subsequent Activity Only			UEPMG	CCOSF	0.00	0.00	730.00				7.86				
	Clear Channel Capability Format - Extended Superframe - Subsequent Activity Only			UEPMG	CCOEF	0.00	0.00	730.00				7.86				
	Alternate Mark Inversion (AMI)															
	Superframe Format			UEPMG	MCOSF	0.00	0.00	0.00								
	Extended Superframe Format			UEPMG	MCOPO	0.00	0.00	0.00								
	Exchange Ports Associated with 4-Wire DS1 Loop with Channelization with Port															
	Exchange Ports															
	Line Side Combination Channelized PBX Trunk Port - Business			UEPPX	UEPCX	1.15	0.00	0.00	0.00	0.00		7.86				
	Line Side Outward Channelized PBX Trunk Port - Business			UEPPX	UEPOX	1.15	0.00	0.00	0.00	0.00		7.86				
	Line Side Inward Only Channelized PBX Trunk Port without DID			UEPPX	UEP1X	1.15	0.00	0.00	0.00	0.00		7.86				
	2-Wire Trunk Side Unbundled Channelized DID Trunk Port			UEPPX	UEPDM	8.65	0.00	0.00	0.00	0.00		7.86				
	Feature Activations - Unbundled Loop Concentration															
	Feature (Service) Activation for each Line Side Port Terminated in D4 Bank			UEPPX	1PQWM	0.62	25.40	13.41	4.17	4.15		7.86				
	Feature (Service) Activation for each Trunk Side Port Terminated in D4 Bank			UEPPX	1PQWU	0.62	78.15	19.68	59.05	11.54		7.86				
	Telephone Number/ Group Establishment Charges for DID Service															
	DID Trunk Termination (1 per Port)			UEPPX	NDT	0.00	0.00	0.00				7.86				
	DID Numbers - groups of 20 - Valid all States			UEPPX	ND4	0.00	0.00	0.00				7.86				
	Non-Consecutive DID Numbers - per number			UEPPX	ND5	0.00	0.00	0.00				7.86				

UNBUNDLED NETWORK ELEMENTS - Kentucky													Attachment: 2		Exhibit: B	
CATEGORY	RATE ELEMENTS	Interim	Zone	BCS	USOC	RATES($)					Svc Order Submitted Elec per LSR	Svc Order Submitted Manually per LSR	Incremental Charge - Manual Svc Order vs. Electronic-1st	Incremental Charge - Manual Svc Order vs. Electronic-Add'l	Incremental Charge - Manual Svc Order vs. Electronic-Disc 1st	Incremental Charge - Manual Svc Order vs. Electronic-Disc Add'l
						Rec	Nonrecurring		Nonrecurring Disconnect		OSS Rates($)					
							First	Add'l	First	Add'l	SOMEC	SOMAN	SOMAN	SOMAN	SOMAN	SOMAN
	Reserve Non-Consecutive DID Numbers			UEPPX	ND6	0.00	0.00	0.00				7.86				
	Reserve DID Numbers			UEPPX	NDV	0.00	0.00	0.00				7.86				
Local Number Portability																
	Local Number Portability - 1 per port			UEPPX	LNPCP	3.15	0.00	0.00								
FEATURES - Vertical and Optional																
Local Switching Features Offered with Line Side Ports Only																
	All Features Available			UEPPX	UEPVF	0.00	0.00	0.00								
Market Rates shall apply where BellSouth is not required to provide unbundled local switching or switch ports per FCC and/or State Commission rules.																
These scenarios include:																
1. Unbundled port/loop combinations that are Not Currently Combined in Alabama, Florida and North Carolina.																
2. Unbundled port/loop combinations that are Currently Combined or Not Currently Combined in Zone 1 of the Top 8 MSAS in BellSouth's region for end users with 4 or more DS0 equivalent lines.																
The Top 8 MSAs in BellSouth's region are: FL (Orlando, Ft. Lauderdale, Miami); GA (Atlanta); LA (New Orleans); NC (Greensboro-Winston Salem-Highpoint/Charlotte-Gastonia-Rock Hill); TN (Nashville).																
BellSouth currently is developing the billing capability to mechanically bill the recurring and non-recurring Market Rates in this section except for nonrecurring charges for not currently combined in AL, FL and NC. In the interim where BellSouth cannot bill Market Rates, BellSouth shall bill the rates in the Cost-Based section preceding in lieu of the Market Rates and reserves the right to true-up the billing difference.																
The Market Rate for unbundled ports includes all available features in all states.																
End Office and Tandem Switching Usage and Common Transport Usage rates in the Port section of this rate exhibit shall apply to all combinations of loop/port network elements except for UNE Coin Port/Loop Combinations which have a flat rate usage charge (USOC: URECU).																
For Not Currently Combined scenarios where Market Rates apply, the Nonrecurring charges are listed in the First and Additional NRC columns for each Port USOC. For Currently Combined scenarios, the Nonrecurring charges are listed in the NRC - Currently Combined section. Additional NRCs may apply also and are categorized accordingly.																
Non-Recurring Charges (NRC) Associated with 4-Wire DS1 Loop with Channeliztion with Port - Conversion Charge Based on a System																
A Minimum System configuration is One (1) DS1, One (1) D4 Channel Bank, and Up To 24 DSO Ports with Feature Activations.																
Multiples of this configuration functioning as one are considered Add'l after the minimum system configuration is counted.																
UNBUNDLED CENTREX PORT/LOOP COMBINATIONS - COST BASED RATES																
1. Cost Based Rates are applied where BellSouth is required by FCC and/or State Commission rule to provide Unbundled Local Switching or Switch Ports.																
2. Features shall apply to the Unbundled Port/Loop Combination - Cost Based Rate section in the same manner as they are applied to the Stand-Alone Unbundled Port section of this Rate Exhibit.																
3. End Office and Tandem Switching Usage and Common Transport Usage rates in the Port section of this rate exhibit shall apply to all combinations of loop/port network elements except for UNE Coin Port/Loop Combinations.																
For Georgia, Kentucky, Louisiana, MIssissippi and Tennessee, the recurring UNE Port and Loop charges listed apply to Currently Combined and Not Currently Combined Combos. The the first and additional Port nonrecurring charges apply to Not Currently Combined Combos for all states. In GA, KY, LA, MS and TN these nonrecurring charges are commission ordered cost based rates and in AL, FL, NC and SC these nonrecurring charges are Market Rates and are listed in the Market Rate section. For Currently Combined Combos in all other states, the nonrecurring charges shall be those identified in the Nonrecurring - Currently Combined sections.																
5. Market Rates for Unbundled Centrex Port/Loop Combination will be negotiated on an Individual Case Basis, until further notice.																
UNE-P CENTREX - 1AESS - (Valid in AL,FL,GA,KY,LA,MS,&TN only)																
2-Wire VG Loop/2-Wire Voice Grade Port (Centrex) Combo																
UNE Port/Loop Combination Rates (Non-Design)																
	2-Wire VG Loop/2-Wire Voice Grade Port (Centrex) Port Combo - Non-Design		1	UEP91		10.79										
	2-Wire VG Loop/2-Wire Voice Grade Port (Centrex)Port Combo - Non-Design		2	UEP91		15.52										
	2-Wire VG Loop/2-Wire Voice Grade Port (Centrex)Port Combo - Non-Design		3	UEP91		31.74										
UNE Port/Loop Combination Rates (Design)																
	2-Wire VG Loop/2-Wire Voice Grade Port (Centrex) Port Combo - Design		1	UEP91		13.82										
	2-Wire VG Loop/2-Wire Voice Grade Port (Centrex)Port Combo - Design		2	UEP91		18.60										
	2-Wire VG Loop/2-Wire Voice Grade Port (Centrex)Port Combo - Design		3	UEP91		34.37										
UNE Loop Rate																
	2-Wire Voice Grade Loop (SL 1) - Zone 1		1	UEP91	UECS1	9.64						7.86				
	2-Wire Voice Grade Loop (SL 1) - Zone 2		2	UEP91	UECS1	14.37						7.86				
	2-Wire Voice Grade Loop (SL 1) - Zone 3		3	UEP91	UECS1	30.59						7.86				
	2-Wire Voice Grade Loop (SL 2) - Zone 1		1	UEP91	UECS2	12.67						7.86				
	2-Wire Voice Grade Loop (SL 2) - Zone 2		2	UEP91	UECS2	17.45						7.86				
	2-Wire Voice Grade Loop (SL 2) - Zone 3		3	UEP91	UECS2	33.22						7.86				
UNE Ports																
All States (Except North Carolina and Sout Carolina)																
	2-Wire Voice Grade Port (Centrex) Basic Local Area			UEP91	UEPYA	1.15	21.29	15.49	2.85	2.67		7.86				
	2-Wire Voice Grade Port (Centrex 800 termination)Basic Local Area			UEP91	UEPYB	1.15	21.29	15.49	2.85	2.67		7.86				

UNBUNDLED NETWORK ELEMENTS - Kentucky														Attachment: 2		Exhibit: B	
CATEGORY		RATE ELEMENTS	Interim	Zone	BCS	USOC	RATES($)					Svc Order Submitted Elec per LSR	Svc Order Submitted Manually per LSR	Incremental Charge - Manual Svc Order vs. Electronic-1st	Incremental Charge - Manual Svc Order vs. Electronic-Add'l	Incremental Charge - Manual Svc Order vs. Electronic-Disc 1st	Incremental Charge - Manual Svc Order vs. Electronic-Disc Add'l
							Rec	Nonrecurring		Nonrecurring Disconnect		OSS Rates($)					
								First	Add'l	First	Add'l	SOMEC	SOMAN	SOMAN	SOMAN	SOMAN	SOMAN
		2-Wire Voice Grade Port (Centrex with Caller ID)1Basic Local Area			UEP91	UEPYH	1.15	21.29	15.49	2.85	2.67		7.86				
		2-Wire Voice Grade Port (Centrex from diff Serving Wire Center)2 Basic Local Area			UEP91	UEPYM	1.15	21.29	15.49	2.85	2.67		7.86				
		2-Wire Voice Grade Port, Diff Serving Wire Center - 800 Service Term - Basic Local Area			UEP91	UEPYZ	1.15	21.29	15.49	2.85	2.67		7.86				
		2-Wire Voice Grade Port terminated in on Megalink or equivalent - Basic Local Area			UEP91	UEPY9	1.15	21.29	15.49	2.85	2.67		7.86				
		2-Wire Voice Grade Port Terminated on 800 Service Term - Basic Local Area			UEP91	UEPY2	1.15	21.29	15.49	2.85	2.67		7.86				
	AL, KY, LA, MS, & TN Only												7.86				
		2-Wire Voice Grade Port (Centrex)			UEP91	UEPQA	1.15	21.29	15.49	2.85	2.67		7.86				
		2-Wire Voice Grade Port (Centrex 800 termination)			UEP91	UEPQB	1.15	21.29	15.49	2.85	2.67		7.86				
		2-Wire Voice Grade Port (Centrex with Caller ID)1			UEP91	UEPQH	1.15	21.29	15.49	2.85	2.67		7.86				
		2-Wire Voice Grade Port (Centrex from diff Serving Wire Center)2			UEP91	UEPQM	1.15	21.29	15.49	2.85	2.67		7.86				
		2-Wire Voice Grade Port, Diff Serving Wire Center - 800 Service Term			UEP91	UEPQZ	1.15	21.29	15.49	2.85	2.67		7.86				
		2-Wire Voice Grade Port terminated in on Megalink or equivalent			UEP91	UEPQ9	1.15	21.29	15.49	2.85	2.67		7.86				
		2-Wire Voice Grade Port Terminated on 800 Service Term			UEP91	UEPQ2	1.15	21.29	15.49	2.85	2.67		7.86				
	Local Switching																
		Centrex Intercom Funtionality, per port			UEP91	URECS	0.8873						7.86				
	Local Number Portability																
		Local Number Portability (1 per port)			UEP91	LNPCC	0.35										
	Features																
		All Standard Features Offered, per port			UEP91	UEPVF	0.00						7.86				
		All Select Features Offered, per port			UEP91	UEPVS	0.00	405.66					7.86				
		All Centrex Control Features Offered, per port			UEP91	UEPVC	0.00						7.86				
	NARS																
		Unbundled Network Access Register - Combination			UEP91	UARCX	0.00	0.00	0.00				7.86				
		Unbundled Network Access Register - Indial			UEP91	UAR1X	0.00	0.00	0.00				7.86				
		Unbundled Network Access Register - Outdial			UEP91	UAROX	0.00	0.00	0.00				7.86				
	Miscellaneous Terminations																
	2-Wire Trunk Side																
		Trunk Side Terminations, each			UEP91	CENA6	10.51	92.18	15.82	52.16	5.30		7.86				
	Interoffice Channel Mileage - 2-Wire																
		Interoffice Channel Facilities Termination - Voice Grade			UEP91	MIGBC	29.11						7.86				
		Interoffice Channel mileage, per mile or fraction of mile			UEP91	MIGBM	0.01						7.86				
	Feature Activations (DS0) Centrex Loops on Channelized DS1 Service																
	D4 Channel Bank Feature Activations																
		Feature Activation on D-4 Channel Bank Centrex Loop Slot			UEP91	1PQWS	0.62						7.86				
		Feature Activation on D-4 Channel Bank FX line Side Loop Slot			UEP91	1PQW6	0.62						7.86				
		Feature Activation on D-4 Channel Bank FX Trunk Side Loop Slot			UEP91	1PQW7	0.62						7.86				
		Feature Activation on D-4 Channel Bank Centrex Loop Slot - Different Wire Center			UEP91	1PQWP	0.62						7.86				
		Feature Activation on D-4 Channel Bank Private Line Loop Slot			UEP91	1PQWV	0.62						7.86				
		Feature Activation on D-4 Channel Bank Tjie Line/Trunk Loop Slot			UEP91	1PQWQ	0.62						7.86				
		Feature Activation on D-4 Channel Bank WATS Loop Slot			UEP91	1PQWA	0.62						7.86				
	Non-Recurring Charges (NRC) Associated with UNE-P Centrex																
		Conversion - Currently Combined Switch-As-Is with allowed changes, per port			UEP91	USAC2		0.102	0.102				7.86				
		Conversion of Existing Centrex Common Block			UEP91	USACN		18.95	8.32								
		New Centrex Standard Common Block			UEP91	M1ACS	0.00	669.80	78.32	111.05	13.27		7.86				
		New Centrex Customized Common Block			UEP91	M1ACC	0.00	669.80	78.32	111.05	13.27		7.86				

UNBUNDLED NETWORK ELEMENTS - Kentucky													Attachment: 2		Exhibit: B	
CATEGORY	RATE ELEMENTS	Interim	Zone	BCS	USOC	RATES($)					Svc Order Submitted Elec per LSR	Svc Order Submitted Manually per LSR	Incremental Charge - Manual Svc Order vs. Electronic-1st	Incremental Charge - Manual Svc Order vs. Electronic-Add'l	Incremental Charge - Manual Svc Order vs. Electronic-Disc 1st	Incremental Charge - Manual Svc Order vs. Electronic-Disc Add'l
						Rec	Nonrecurring		Nonrecurring Disconnect		OSS Rates($)					
							First	Add'l	First	Add'l	SOMEC	SOMAN	SOMAN	SOMAN	SOMAN	SOMAN
	Secondary Block, per Block			UEP91	M2CC1	0.00	78.32	78.32	13.27	13.27		7.86				
	NAR Establishment Charge, Per Occasion			UEP91	URECA	0.00	72.75					7.86				
UNE-P CENTREX - 5ESS (Valid in All States)																
2-Wire VG Loop/2-Wire Voice Grade Port (Centrex) Combo																
UNE Port/Loop Combination Rates (Non-Design)																
	2-Wire VG Loop/2-Wire Voice Grade Port (Centrex) Port Combo - Non-Design		1	UEP95		10.79										
	2-Wire VG Loop/2-Wire Voice Grade Port (Centrex)Port Combo - Non-Design		2	UEP95		15.52										
	2-Wire VG Loop/2-Wire Voice Grade Port (Centrex)Port Combo - Non-Design		3	UEP95		31.74										
UNE Port/Loop Combination Rates (Design)																
	2-Wire VG Loop/2-Wire Voice Grade Port (Centrex) Port Combo - Design		1	UEP95		13.82										
	2-Wire VG Loop/2-Wire Voice Grade Port (Centrex)Port Combo - Design		2	UEP95		18.60										
	2-Wire VG Loop/2-Wire Voice Grade Port (Centrex)Port Combo - Design		3	UEP95		34.37										
UNE Loop Rate																
	2-Wire Voice Grade Loop (SL 1) - Zone 1		1	UEP95	UECS1	9.64						7.86				
	2-Wire Voice Grade Loop (SL 1) - Zone 2		2	UEP95	UECS1	14.37						7.86				
	2-Wire Voice Grade Loop (SL 1) - Zone 3		3	UEP95	UECS1	30.59						7.86				
	2-Wire Voice Grade Loop (SL 2) - Zone 1		1	UEP95	UECS2	12.67						7.86				
	2-Wire Voice Grade Loop (SL 2) - Zone 2		2	UEP95	UECS2	17.45						7.86				
	2-Wire Voice Grade Loop (SL 2) - Zone 3		3	UEP95	UECS2	33.22						7.86				
UNE Port Rate																
All States																
	2-Wire Voice Grade Port (Centrex) Basic Local Area			UEP95	UEPYA	1.15	21.29	15.49	2.85	2.67		7.86				
	2-Wire Voice Grade Port (Centrex 800 termination)			UEP95	UEPYB	1.15	21.29	15.49	2.85	2.67		7.86				
	2-Wire Voice Grade Port (Centrex with Caller ID)1Basic Local Area			UEP95	UEPYH	1.15	21.29	15.49	2.85	2.67		7.86				
	2-Wire Voice Grade Port (Centrex from diff Serving Wire Center)2 Basic Local Area			UEP95	UEPYM	1.15	21.29	15.49	2.85	2.67		7.86				
	2-Wire Voice Grade Port, Diff Serving Wire Center - 800 Service Term - Basic Local Area			UEP95	UEPYZ	1.15	21.29	15.49	2.85	2.67		7.86				
	2-Wire Voice Grade Port terminated in on Megalink or equivalent - Basic Local Area			UEP95	UEPY9	1.15	21.29	15.49	2.85	2.67		7.86				
	2-Wire Voice Grade Port Terminated on 800 Service Term - Basic Local Area			UEP95	UEPY2	1.15	21.29	15.49	2.85	2.67		7.86				
AL, KY, LA, MS, SC, & TN Only																
	2-Wire Voice Grade Port (Centrex)			UEP95	UEPQA	1.15	21.29	15.49	2.85	2.67		7.86				
	2-Wire Voice Grade Port (Centrex 800 termination)			UEP95	UEPQB	1.15	21.29	15.49	2.85	2.67		7.86				
	2-Wire Voice Grade Port (Centrex with Caller ID)1			UEP95	UEPQH	1.15	21.29	15.49	2.85	2.67		7.86				
	2-Wire Voice Grade Port (Centrex from diff Serving Wire Center)2			UEP95	UEPQM	1.15	21.29	15.49	2.85	2.67		7.86				
	2-Wire Voice Grade Port, Diff Serving Wire Center - 800 Service Term			UEP95	UEPQZ	1.15	21.29	15.49	2.85	2.67		7.86				
	2-Wire Voice Grade Port terminated in on Megalink or equivalent			UEP95	UEPQ9	1.15	21.29	15.49	2.85	2.67		7.86				
	2-Wire Voice Grade Port Terminated on 800 Service Term			UEP95	UEPQ2	1.15	21.29	15.49	2.85	2.67		7.86				
Local Switching																
	Centrex Intercom Funtionality, per port			UEP95	URECS	0.8873						7.86				
Local Number Portability																
	Local Number Portability (1 per port)			UEP95	LNPCC	0.35										
Features																
	All Standard Features Offered, per port			UEP95	UEPVF	0.00						7.86				
	All Select Features Offered, per port			UEP95	UEPVS	0.00	405.66					7.86				
	All Centrex Control Features Offered, per port			UEP95	UEPVC	0.00						7.86				
NARS																

UNBUNDLED NETWORK ELEMENTS - Kentucky													Attachment: 2		Exhibit: B	
CATEGORY	RATE ELEMENTS	Interim	Zone	BCS	USOC	RATES($)					Svc Order Submitted Elec per LSR	Svc Order Submitted Manually per LSR	Incremental Charge - Manual Svc Order vs. Electronic-1st	Incremental Charge - Manual Svc Order vs. Electronic-Add'l	Incremental Charge - Manual Svc Order vs. Electronic-Disc 1st	Incremental Charge - Manual Svc Order vs. Electronic-Disc Add'l
						Rec	Nonrecurring		Nonrecurring Disconnect		OSS Rates($)					
							First	Add'l	First	Add'l	SOMEC	SOMAN	SOMAN	SOMAN	SOMAN	SOMAN
	Unbundled Network Access Register - Combination			UEP95	UARCX	0.00	0.00	0.00				7.86				
	Unbundled Network Access Register - Indial			UEP95	UAR1X	0.00	0.00	0.00				7.86				
	Unbundled Network Access Register - Outdial			UEP95	UAROX	0.00	0.00	0.00				7.86				
Miscellaneous Terminations																
2-Wire Trunk Side																
	Trunk Side Terminations, each			UEP95	CEND6	10.51	92.18	15.82	52.16	5.30		7.86				
4-Wire Digital (1.544 Megabits)																
	DS1 Circuit Terminations, each			UEP95	M1HD1	74.77	164.86	77.74	60.69	3.86		7.86				
	DS0 Channels Activated, each			UEP95	M1HDO	0.00	15.09					7.86				
Interoffice Channel Mileage - 2-Wire																
	Interoffice Channel Facilities Termination			UEP95	MIGBC	29.11						7.86				
	Interoffice Channel mileage, per mile or fraction of mile			UEP95	MIGBM	0.01						7.86				
Feature Activations (DS0) Centrex Loops on Channelized DS1 Service																
D4 Channel Bank Feature Activations												7.86				
	Feature Activation on D-4 Channel Bank Centrex Loop Slot			UEP95	1PQWS	0.62						7.86				
	Feature Activation on D-4 Channel Bank FX line Side Loop Slot			UEP95	1PQW6	0.62						7.86				
	Feature Activation on D-4 Channel Bank FX Trunk Side Loop Slot			UEP95	1PQW7	0.62						7.86				
	Feature Activation on D-4 Channel Bank Centrex Loop Slot - Different Wire Center			UEP95	1PQWP	0.62						7.86				
	Feature Activation on D-4 Channel Bank Private Line Loop Slot			UEP95	1PQWV	0.62						7.86				
	Feature Activation on D-4 Channel Bank Tjie Line/Trunk Loop Slot			UEP95	1PQWQ	0.62						7.86				
	Feature Activation on D-4 Channel Bank WATS Loop Slot			UEP95	1PQWA	0.62						7.86				
Non-Recurring Charges (NRC) Associated with UNE-P Centrex																
	NRC Conversion Currently Combined Switch-As-Is with allowed changes, per port			UEP95	USAC2		0.102	0.102				7.86				
	Conversion of Existing Centrex Common Block, each			UEP95	USACN		18.95	8.32				7.86				
	New Centrex Standard Common Block			UEP95	M1ACS	0.00	669.80	78.32	111.05	13.27		7.86				
	New Centrex Customized Common Block			UEP95	M1ACC	0.00	669.80	78.32	111.05	13.27		7.86				
	NAR Establishment Charge, Per Occasion			UEP95	URECA	0.00	72.75					7.86				
UNE-P CENTREX - DMS100 (Valid in All States)																
2-Wire VG Loop/2-Wire Voice Grade Port (Centrex) Combo																
UNE Port/Loop Combination Rates (Non-Design)																
	2-Wire VG Loop/2-Wire Voice Grade Port (Centrex) Port Combo - Non-Design		1	UEP9D		10.79										
	2-Wire VG Loop/2-Wire Voice Grade Port (Centrex)Port Combo - Non-Design		2	UEP9D		15.52										
	2-Wire VG Loop/2-Wire Voice Grade Port (Centrex)Port Combo - Non-Design		3	UEP9D		31.74										
UNE Port/Loop Combination Rates (Design)																
	2-Wire VG Loop/2-Wire Voice Grade Port (Centrex) Port Combo - Design		1	UEP9D		13.82										
	2-Wire VG Loop/2-Wire Voice Grade Port (Centrex)Port Combo - Design		2	UEP9D		18.60										
	2-Wire VG Loop/2-Wire Voice Grade Port (Centrex)Port Combo - Design		3	UEP9D		34.37										
UNE Loop Rate																
	2-Wire Voice Grade Loop (SL 1) - Zone 1		1	UEP9D	UECS1	9.64						7.86				
	2-Wire Voice Grade Loop (SL 1) - Zone 2		2	UEP9D	UECS1	14.37						7.86				
	2-Wire Voice Grade Loop (SL 1) - Zone 3		3	UEP9D	UECS1	30.59						7.86				
	2-Wire Voice Grade Loop (SL 2) - Zone 1		1	UEP9D	UECS2	12.67						7.86				
	2-Wire Voice Grade Loop (SL 2) - Zone 2		2	UEP9D	UECS2	17.45						7.86				
	2-Wire Voice Grade Loop (SL 2) - Zone 3		3	UEP9D	UECS2	33.22						7.86				
UNE Port Rate																
ALL STATES																
	2-Wire Voice Grade Port (Centrex) Basic Local Area			UEP9D	UEPYA	1.15	21.29	15.49	2.85	2.67		7.86				

CATEGORY		RATE ELEMENTS	Interim	Zone	BCS	USOC	RATES($)					Svc Order Submitted Elec per LSR	Svc Order Submitted Manually per LSR	Incremental Charge - Manual Svc Order vs. Electronic-1st	Incremental Charge - Manual Svc Order vs. Electronic-Add'l	Incremental Charge - Manual Svc Order vs. Electronic-Disc 1st	Incremental Charge - Manual Svc Order vs. Electronic-Disc Add'l
								Nonrecurring		Nonrecurring Disconnect		OSS Rates($)					
							Rec	First	Add'l	First	Add'l	SOMEC	SOMAN	SOMAN	SOMAN	SOMAN	SOMAN
		2-Wire Voice Grade Port (Centrex 800 termination)Basic Local Area			UEP9D	UEPYB	1.15	21.29	15.49	2.85	2.67		7.86				
		2-Wire Voice Grade Port (Centrex / EBS-PSET)3Basic Local Area			UEP9D	UEPYC	1.15	21.29	15.49	2.85	2.67		7.86				
		2-Wire Voice Grade Port (Centrex / EBS-M5009)3Basic Local Area			UEP9D	UEPYD	1.15	21.29	15.49	2.85	2.67		7.86				
		2-Wire Voice Grade Port (Centrex / EBS-M5209))3 Basic Local Area			UEP9D	UEPYE	1.15	21.29	15.49	2.85	2.67		7.86				
		2-Wire Voice Grade Port (Centrex / EBS-M5112))3 Basic Local Area			UEP9D	UEPYF	1.15	21.29	15.49	2.85	2.67		7.86				
		2-Wire Voice Grade Port (Centrex / EBS-M5312))3Basic Local Area			UEP9D	UEPYG	1.15	21.29	15.49	2.85	2.67		7.86				
		2-Wire Voice Grade Port (Centrex / EBS-M5008))3 Basic Local Area			UEP9D	UEPYT	1.15	21.29	15.49	2.85	2.67		7.86				
		2-Wire Voice Grade Port (Centrex / EBS-M5208))3 Basic Local Area			UEP9D	UEPYU	1.15	21.29	15.49	2.85	2.67		7.86				
		2-Wire Voice Grade Port (Centrex / EBS-M5216))3 Basic Local Area			UEP9D	UEPYV	1.15	21.29	15.49	2.85	2.67		7.86				
		2-Wire Voice Grade Port (Centrex / EBS-M5316))3 Basic Local Area			UEP9D	UEPY3	1.15	21.29	15.49	2.85	2.67		7.86				
		2-Wire Voice Grade Port (Centrex with Caller ID) Basic Local Area			UEP9D	UEPYH	1.15	21.29	15.49	2.85	2.67		7.86				
		2-Wire Voice Grade Port (Centrex/Caller ID/Msg Wtg Lamp Indication))3 Basic Local Area			UEP9D	UEPYW	1.15	21.29	15.49	2.85	2.67		7.86				
		2-Wire Voice Grade Port (Centrex/Msg Wtg Lamp Indication))3 Basic Local Area			UEP9D	UEPYJ	1.15	21.29	15.49	2.85	2.67		7.86				
		2-Wire Voice Grade Port (Centrex from diff Serving Wire Center) 2 Basic Local Area			UEP9D	UEPYM	1.15	21.29	15.49	2.85	2.67		7.86				
		2-Wire Voice Grade Port (Centrex/differ SWC /EBS-PSET)2, 3 Basic Local Area			UEP9D	UEPYO	1.15	21.29	15.49	2.85	2.67		7.86				
		2-Wire Voice Grade Port (Centrex/differ SWC /EBS-M5009)2, 3 Basic Local Area			UEP9D	UEPYP	1.15	21.29	15.49	2.85	2.67		7.86				
		2-Wire Voice Grade Port (Centrex/differ SWC /EBS-5209)2, 3 Basic Local Area			UEP9D	UEPYQ	1.15	21.29	15.49	2.85	2.67		7.86				
		2-Wire Voice Grade Port (Centrex/differ SWC /EBS-M5112)2, 3 Basic Local Area			UEP9D	UEPYR	1.15	21.29	15.49	2.85	2.67		7.86				
		2-Wire Voice Grade Port (Centrex/differ SWC /EBS-M5312)2, 3 Basic Local Area			UEP9D	UEPYS	1.15	21.29	15.49	2.85	2.67		7.86				
		2-Wire Voice Grade Port (Centrex/differ SWC /EBS-M5008)2, 3 Basic Local Area			UEP9D	UEPY4	1.15	21.29	15.49	2.85	2.67		7.86				
		2-Wire Voice Grade Port (Centrex/differ SWC /EBS-M5208)2, 3 Basic Local Area			UEP9D	UEPY5	1.15	21.29	15.49	2.85	2.67		7.86				
		2-Wire Voice Grade Port (Centrex/differ SWC /EBS-M5216)2, 3 Basic Local Area			UEP9D	UEPY6	1.15	21.29	15.49	2.85	2.67		7.86				
		2-Wire Voice Grade Port (Centrex/differ SWC /EBS-M5316)2, 3 Basic Local Area			UEP9D	UEPY7	1.15	21.29	15.49	2.85	2.67		7.86				
		2-Wire Voice Grade Port, Diff Serving Wire Center - 800 Service Term			UEP9D	UEPYZ	1.15	21.29	15.49	2.85	2.67		7.86				
		2-Wire Voice Grade Port terminated in on Megalink or equivalent Basic Local Area			UEP9D	UEPY9	1.15	21.29	15.49	2.85	2.67		7.86				
		2-Wire Voice Grade Port Terminated on 800 Service Term Basic Local Area			UEP9D	UEPY2	1.15	21.29	15.49	2.85	2.67		7.86				
	AL, KY, LA, MS, SC, & TN Only												7.86				
		2-Wire Voice Grade Port (Centrex)			UEP9D	UEPQA	1.15	21.29	15.49	2.85	2.67		7.86				
		2-Wire Voice Grade Port (Centrex 800 termination)			UEP9D	UEPQB	1.15	21.29	15.49	2.85	2.67		7.86				
		2-Wire Voice Grade Port (Centrex / EBS-PSET)3			UEP9D	UEPQC	1.15	21.29	15.49	2.85	2.67		7.86				
		2-Wire Voice Grade Port (Centrex / EBS-M5009)3			UEP9D	UEPQD	1.15	21.29	15.49	2.85	2.67		7.86				
		2-Wire Voice Grade Port (Centrex / EBS-M5209)3			UEP9D	UEPQE	1.15	21.29	15.49	2.85	2.67		7.86				
		2-Wire Voice Grade Port (Centrex / EBS-M5112)3			UEP9D	UEPQF	1.15	21.29	15.49	2.85	2.67		7.86				

UNBUNDLED NETWORK ELEMENTS - Kentucky														Attachment: 2		Exhibit: B	
CATEGORY		RATE ELEMENTS	Interim	Zone	BCS	USOC	RATES($)					Svc Order Submitted Elec per LSR	Svc Order Submitted Manually per LSR	Incremental Charge - Manual Svc Order vs. Electronic-1st	Incremental Charge - Manual Svc Order vs. Electronic-Add'l	Incremental Charge - Manual Svc Order vs. Electronic-Disc 1st	Incremental Charge - Manual Svc Order vs. Electronic-Disc Add'l
							Rec	Nonrecurring		Nonrecurring Disconnect		OSS Rates($)					
								First	Add'l	First	Add'l	SOMEC	SOMAN	SOMAN	SOMAN	SOMAN	SOMAN
		2-Wire Voice Grade Port (Centrex / EBS-M5312)3			UEP9D	UEPQG	1.15	21.29	15.49	2.85	2.67		7.86				
		2-Wire Voice Grade Port (Centrex / EBS-M5008)3			UEP9D	UEPQT	1.15	21.29	15.49	2.85	2.67		7.86				
		2-Wire Voice Grade Port (Centrex / EBS-M5208)3			UEP9D	UEPQU	1.15	21.29	15.49	2.85	2.67		7.86				
		2-Wire Voice Grade Port (Centrex / EBS-M5216)3			UEP9D	UEPQV	1.15	21.29	15.49	2.85	2.67		7.86				
		2-Wire Voice Grade Port (Centrex / EBS-M5316)3			UEP9D	UEPQ3	1.15	21.29	15.49	2.85	2.67		7.86				
		2-Wire Voice Grade Port (Centrex with Caller ID)			UEP9D	UEPQH	1.15	21.29	15.49	2.85	2.67		7.86				
		2-Wire Voice Grade Port (Centrex/Caller ID/Msg Wtg Lamp Indication)3			UEP9D	UEPQW	1.15	21.29	15.49	2.85	2.67		7.86				
		2-Wire Voice Grade Port (Centrex/Msg Wtg Lamp Indication)3			UEP9D	UEPQJ	1.15	21.29	15.49	2.85	2.67		7.86				
		2-Wire Voice Grade Port (Centrex from diff Serving Wire Center) 2			UEP9D	UEPQM	1.15	21.29	15.49	2.85	2.67		7.86				
		2-Wire Voice Grade Port (Centrex/differ SWC /EBS-PSET)2, 3			UEP9D	UEPQO	1.15	21.29	15.49	2.85	2.67		7.86				
		2-Wire Voice Grade Port (Centrex/differ SWC /EBS-M5009)2, 3			UEP9D	UEPQP	1.15	21.29	15.49	2.85	2.67		7.86				
		2-Wire Voice Grade Port (Centrex/differ SWC /EBS-5209)2, 3			UEP9D	UEPQQ	1.15	21.29	15.49	2.85	2.67		7.86				
		2-Wire Voice Grade Port (Centrex/differ SWC /EBS-M5112)2, 3			UEP9D	UEPQR	1.15	21.29	15.49	2.85	2.67		7.86				
		2-Wire Voice Grade Port (Centrex/differ SWC /EBS-M5312)2, 3			UEP9D	UEPQS	1.15	21.29	15.49	2.85	2.67		7.86				
		2-Wire Voice Grade Port (Centrex/differ SWC /EBS-M5008)2, 3			UEP9D	UEPQ4	1.15	21.29	15.49	2.85	2.67		7.86				
		2-Wire Voice Grade Port (Centrex/differ SWC /EBS-M5208)2, 3			UEP9D	UEPQ5	1.15	21.29	15.49	2.85	2.67		7.86				
		2-Wire Voice Grade Port (Centrex/differ SWC /EBS-M5216)2, 3			UEP9D	UEPQ6	1.15	21.29	15.49	2.85	2.67		7.86				
		2-Wire Voice Grade Port (Centrex/differ SWC /EBS-M5316)2, 3			UEP9D	UEPQ7	1.15	21.29	15.49	2.85	2.67		7.86				
		2-Wire Voice Grade Port, Diff Serving Wire Center - 800 Service Term			UEP9D	UEPQZ	1.15	21.29	15.49	2.85	2.67		7.86				
		2-Wire Voice Grade Port terminated in on Megalink or equivalent			UEP9D	UEPQ9	1.15	21.29	15.49	2.85	2.67		7.86				
		2-Wire Voice Grade Port Terminated on 800 Service Term			UEP9D	UEPQ2	1.15	21.29	15.49	2.85	2.67		7.86				
	Local Switching																
		Centrex Intercom Funtionality, per port			UEP9D	URECS	0.8873						7.86				
	Local Number Portability																
		Local Number Portability (1 per port)			UEP9D	LNPCC	0.35										
	Features																
		All Standard Features Offered, per port			UEP9D	UEPVF	0.00						7.86				
		All Select Features Offered, per port			UEP9D	UEPVS	0.00	405.66					7.86				
		All Centrex Control Features Offered, per port			UEP9D	UEPVC	0.00						7.86				
	NARS																
		Unbundled Network Access Register - Combination			UEP9D	UARCX	0.00	0.00	0.00				7.86				
		Unbundled Network Access Register - Inward			UEP9D	UAR1X	0.00	0.00	0.00				7.86				
		Unbundled Network Access Register - Outdial			UEP9D	UAROX	0.00	0.00	0.00				7.86				
	Miscellaneous Terminations																
	2-Wire Trunk Side																
		Trunk Side Terminations, each			UEP9D	CEND6	10.51	92.18	15.82	52.16	5.30		7.86				
	4-Wire Digital (1.544 Megabits)																
		DS1 Circuit Terminations, each			UEP9D	M1HD1	74.77	164.86	77.74	60.69	3.86		7.86				
		DS0 Channels Activiated per Channel			UEP9D	M1HDO	0.00	15.09					7.86				
	Interoffice Channel Mileage - 2-Wire																
		Interoffice Channel Facilities Termination			UEP9D	MIGBC	29.11						7.86				
		Interoffice Channel mileage, per mile or fraction of mile			UEP9D	MIGBM	0.01						7.86				
	Feature Activations (DS0) Centrex Loops on Channelized DS1 Service																
	D4 Channel Bank Feature Activations																
		Feature Activation on D-4 Channel Bank Centrex Loop Slot			UEP9D	1PQWS	0.62						7.86				
		Feature Activation on D-4 Channel Bank FX line Side Loop Slot			UEP9D	1PQW6	0.62						7.86				

UNBUNDLED NETWORK ELEMENTS - Kentucky													Attachment: 2		Exhibit: B	
CATEGORY	RATE ELEMENTS	Interim	Zone	BCS	USOC	RATES($)					Svc Order Submitted Elec per LSR	Svc Order Submitted Manually per LSR	Incremental Charge - Manual Svc Order vs. Electronic-1st	Incremental Charge - Manual Svc Order vs. Electronic-Add'l	Incremental Charge - Manual Svc Order vs. Electronic-Disc 1st	Incremental Charge - Manual Svc Order vs. Electronic-Disc Add'l
						Rec	Nonrecurring		Nonrecurring Disconnect		OSS Rates($)					
							First	Add'l	First	Add'l	SOMEC	SOMAN	SOMAN	SOMAN	SOMAN	SOMAN
	Feature Activation on D-4 Channel Bank FX Trunk Side Loop Slot			UEP9D	1PQW7	0.62						7.86				
	Feature Activation on D-4 Channel Bank Centrex Loop Slot - Different Wire Center			UEP9D	1PQWP	0.62						7.86				
	Feature Activation on D-4 Channel Bank Private Line Loop Slot			UEP9D	1PQWV	0.62						7.86				
	Feature Activation on D-4 Channel Bank Tjie Line/Trunk Loop Slot			UEP9D	1PQWQ	0.62						7.86				
	Feature Activation on D-4 Channel Bank WATS Loop Slot			UEP9D	1PQWA	0.62						7.86				
Non-Recurring Charges (NRC) Associated with UNE-P Centrex																
	NRC Conversion Currently Combined Switch-As-Is with allowed changes, per port			UEP9D	USAC2		0.102	0.102				7.86				
	Conversion of existing Centrex Common Block, each			UEP9D	USACN		18.95	8.32				7.86				
	New Centrex Standard Common Block			UEP9D	M1ACS	0.00	669.80	78.32	111.05	13.27		7.86				
	New Centrex Customized Common Block			UEP9D	M1ACC	0.00	669.80	78.32	111.05	13.27		7.86				
	NAR Establishment Charge, Per Occasion			UEP9D	URECA	0.00	72.75					7.86				
UNE-P CENTREX - EWSD (Valid in AL, FL, KY, LA, MS & TN)																
2-Wire VG Loop/2-Wire Voice Grade Port (Centrex) Combo																
UNE Port/Loop Combination Rates (Non-Design)																
	2-Wire VG Loop/2-Wire Voice Grade Port (Centrex) Port Combo - Non-Design		1	UEP9E		10.79										
	2-Wire VG Loop/2-Wire Voice Grade Port (Centrex)Port Combo - Non-Design		2	UEP9E		15.52										
	2-Wire VG Loop/2-Wire Voice Grade Port (Centrex)Port Combo - Non-Design		3	UEP9E		31.74										
UNE Port/Loop Combination Rates (Design)																
	2-Wire VG Loop/2-Wire Voice Grade Port (Centrex) Port Combo - Design		1	UEP9E		13.82										
	2-Wire VG Loop/2-Wire Voice Grade Port (Centrex)Port Combo - Design		2	UEP9E		18.60										
	2-Wire VG Loop/2-Wire Voice Grade Port (Centrex)Port Combo - Design		3	UEP9E		34.37										
UNE Loop Rate																
	2-Wire Voice Grade Loop (SL 1) - Zone 1		1	UEP9E	UECS1	9.64						7.86				
	2-Wire Voice Grade Loop (SL 1) - Zone 2		2	UEP9E	UECS1	14.37						7.86				
	2-Wire Voice Grade Loop (SL 1) - Zone 3		3	UEP9E	UECS1	30.59						7.86				
	2-Wire Voice Grade Loop (SL 2) - Zone 1		1	UEP9E	UECS2	12.67						7.86				
	2-Wire Voice Grade Loop (SL 2) - Zone 2		2	UEP9E	UECS2	17.45						7.86				
	2-Wire Voice Grade Loop (SL 2) - Zone 3		3	UEP9E	UECS2	33.22						7.86				
UNE Port Rate																
AL, FL, KY, LA, MS, & TN only																
	2-Wire Voice Grade Port (Centrex) Basic Local Area			UEP9E	UEPYA	1.15	21.29	15.49	2.85	2.67		7.86				
	2-Wire Voice Grade Port (Centrex 800 termination)Basic Local Area			UEP9E	UEPYB	1.15	21.29	15.49	2.85	2.67		7.86				
	2-Wire Voice Grade Port (Centrex with Caller ID)1Basic Local Area			UEP9E	UEPYH	1.15	21.29	15.49	2.85	2.67		7.86				
	2-Wire Voice Grade Port (Centrex from diff Serving Wire Center)2 Basic Local Area			UEP9E	UEPYM	1.15	21.29	15.49	2.85	2.67		7.86				
	2-Wire Voice Grade Port, Diff Serving Wire Center - 800 Service Term - Basic Local Area			UEP9E	UEPYZ	1.15	21.29	15.49	2.85	2.67		7.86				
	2-Wire Voice Grade Port terminated in on Megalink or equivalent - Basic Local Area			UEP9E	UEPY9	1.15	21.29	15.49	2.85	2.67		7.86				
	2-Wire Voice Grade Port Terminated on 800 Service Term - Basic Local Area			UEP9E	UEPY2	1.15	21.29	15.49	2.85	2.67		7.86				
AL, KY, LA, MS, & TN Only																
	2-Wire Voice Grade Port (Centrex)			UEP9E	UEPQA	1.15	21.29	15.49	2.85	2.67		7.86				
	2-Wire Voice Grade Port (Centrex 800 termination)			UEP9E	UEPQB	1.15	21.29	15.49	2.85	2.67		7.86				
	2-Wire Voice Grade Port (Centrex with Caller ID)1			UEP9E	UEPQH	1.15	21.29	15.49	2.85	2.67		7.86				

UNBUNDLED NETWORK ELEMENTS - Kentucky													Attachment: 2		Exhibit: B	
CATEGORY	RATE ELEMENTS	Interim	Zone	BCS	USOC	RATES($)					Svc Order Submitted Elec per LSR	Svc Order Submitted Manually per LSR	Incremental Charge - Manual Svc Order vs. Electronic-1st	Incremental Charge - Manual Svc Order vs. Electronic-Add'l	Incremental Charge - Manual Svc Order vs. Electronic-Disc 1st	Incremental Charge - Manual Svc Order vs. Electronic-Disc Add'l
						Rec	Nonrecurring		Nonrecurring Disconnect		OSS Rates($)					
							First	Add'l	First	Add'l	SOMEC	SOMAN	SOMAN	SOMAN	SOMAN	SOMAN
	2-Wire Voice Grade Port (Centrex from diff Serving Wire Center)2			UEP9E	UEPQM	1.15	21.29	15.49	2.85	2.67		7.86				
	2-Wire Voice Grade Port, Diff Serving Wire Center - 800 Service Term			UEP9E	UEPQZ	1.15	21.29	15.49	2.85	2.67		7.86				
	2-Wire Voice Grade Port terminated in on Megalink or equivalent			UEP9E	UEPQ9	1.15	21.29	15.49	2.85	2.67		7.86				
	2-Wire Voice Grade Port Terminated on 800 Service Term			UEP9E	UEPQ2	1.15	21.29	15.49	2.85	2.67		7.86				
Local Switching																
	Centrex Intercom Funtionality, per port			UEP9E	URECS	0.8873						7.86				
Local Number Portability																
	Local Number Portability (1 per port)			UEP9E	LNPCC	0.35						7.86				
Features																
	All Standard Features Offered, per port			UEP9E	UEPVF	0.00						7.86				
	All Select Features Offered, per port			UEP9E	UEPVS	0.00	405.66					7.86				
	All Centrex Control Features Offered, per port			UEP9E	UEPVC	0.00						7.86				
NARS																
	Unbundled Network Access Register - Combination			UEP9E	UARCX	0.00	0.00	0.00								
	Unbundled Network Access Register - Indial			UEP9E	UAR1X	0.00	0.00	0.00								
	Unbundled Network Access Register - Outdial			UEP9E	UAROX	0.00	0.00	0.00								
Miscellaneous Terminations																
2-Wire Trunk Side																
	Trunk Side Terminations, each			UEP9E	CEND6	10.51	92.18	15.82	52.16	5.30		7.86				
4-Wire Digital (1.544 Megabits)																
	DS1 Circuit Terminations, each			UEP9E	M1HD1	74.77	164.86	77.74	60.69	3.86		7.86				
	DS0 Channel Activated Per Channel			UEP9E	M1HDO	0.00	15.09					7.86				
Interoffice Channel Mileage - 2-Wire																
	Interoffice Channel Facilities Termination			UEP9E	MIGBC	29.11						7.86				
	Interoffice Channel mileage, per mile or fraction of mile			UEP9E	MIGBM	0.01						7.86				
Feature Activations (DS0) Centrex Loops on Channelized DS1 Service																
D4 Channel Bank Feature Activations																
	Feature Activation on D-4 Channel Bank Centrex Loop Slot			UEP9E	1PQWS	0.62						7.86				
	Feature Activation on D-4 Channel Bank FX line Side Loop Slot			UEP9E	1PQW6	0.62						7.86				
	Feature Activation on D-4 Channel Bank FX Trunk Side Loop Slot			UEP9E	1PQW7	0.62						7.86				
	Feature Activation on D-4 Channel Bank Centrex Loop Slot - Different Wire Center			UEP9E	1PQWP	0.62						7.86				
	Feature Activation on D-4 Channel Bank Private Line Loop Slot			UEP9E	1PQWV	0.62						7.86				
	Feature Activation on D-4 Channel Bank Tjie Line/Trunk Loop Slot			UEP9E	1PQWQ	0.62						7.86				
	Feature Activation on D-4 Channel Bank WATS Loop Slot			UEP9E	1PQWA	0.62						7.86				
Non-Recurring Charges (NRC) Associated with UNE-P Centrex																
	NRC Conversion Currently Combined Switch-As-Is with allowed changes, per port			UEP9E	USAC2		0.102	0.102				7.86				
	Conversion of Existing Centrex Common Block, each			UEP9E	USACN		18.95	8.32								
	New Centrex Standard Common Block			UEP9E	M1ACS	0.00	669.80	78.32	111.05	13.27		7.86				
	New Centrex Customized Common Block			UEP9E	M1ACC	0.00	669.80	78.32	111.05	13.27		7.86				
	NAR Establishment Charge, Per Occasion			UEP9E	URECA	0.00	72.75					7.86				
UNE-P CENTREX - DCO - Valid in AL, KY, LA, MS, & TN)																
2-Wire VG Loop/2-Wire Voice Grade Port (Centrex) Combo																
UNE Port/Loop Combination Rates (Non-Design)																
	2-Wire VG Loop/2-Wire Voice Grade Port (Centrex) Port Combo - Non-Design		1	UEP93		10.79										
	2-Wire VG Loop/2-Wire Voice Grade Port (Centrex)Port Combo - Non-Design		2	UEP93		15.52										
	2-Wire VG Loop/2-Wire Voice Grade Port (Centrex)Port Combo - Non-Design		3	UEP93		31.74										
UNE Port/Loop Combination Rates (Design)																

CATEGORY	RATE ELEMENTS	Interim	Zone	BCS	USOC	RATES($) Rec	Nonrecurring First	Nonrecurring Add'l	Nonrecurring Disconnect First	Nonrecurring Disconnect Add'l	Svc Order Submitted Elec per LSR	Svc Order Submitted Manually per LSR	Incremental Charge - Manual Svc Order vs. Electronic-1st	Incremental Charge - Manual Svc Order vs. Electronic-Add'l	Incremental Charge - Manual Svc Order vs. Electronic-Disc 1st	Incremental Charge - Manual Svc Order vs. Electronic-Disc Add'l
											OSS Rates($)					
											SOMEC	SOMAN	SOMAN	SOMAN	SOMAN	SOMAN
	2-Wire VG Loop/2-Wire Voice Grade Port (Centrex) Port Combo - Design		1	UEP93		13.82										
	2-Wire VG Loop/2-Wire Voice Grade Port (Centrex)Port Combo - Design		2	UEP93		18.60										
	2-Wire VG Loop/2-Wire Voice Grade Port (Centrex)Port Combo - Design		3	UEP93		34.37										
UNE Loop Rate																
	2-Wire Voice Grade Loop (SL 1) - Zone 1		1	UEP93	UECS1	9.64										
	2-Wire Voice Grade Loop (SL 1) - Zone 2		2	UEP93	UECS1	14.37										
	2-Wire Voice Grade Loop (SL 1) - Zone 3		3	UEP93	UECS1	30.59										
	2-Wire Voice Grade Loop (SL 2) - Zone 1		1	UEP93	UECS2	12.67										
	2-Wire Voice Grade Loop (SL 2) - Zone 2		2	UEP93	UECS2	17.45										
	2-Wire Voice Grade Loop (SL 2) - Zone 3		3	UEP93	UECS2	33.22										
UNE Port Rate																
AL, KY, LA, MS, & TN only																
	2-Wire Voice Grade Port (Centrex) Basic Local Area			UEP93	UEPYA	1.15	21.29	15.49	2.85	2.67		7.86				
	2-Wire Voice Grade Port (Centrex 800 termination)Basic Local Area			UEP93	UEPYB	1.15	21.29	15.49	2.85	2.67		7.86				
	2-Wire Voice Grade Port (Centrex with Caller ID)1Basic Local Area			UEP93	UEPYH	1.15	21.29	15.49	2.85	2.67		7.86				
	2-Wire Voice Grade Port (Centrex from diff Serving Wire Center)2 Basic Local Area			UEP93	UEPYM	1.15	21.29	15.49	2.85	2.67		7.86				
	2-Wire Voice Grade Port, Diff Serving Wire Center - 800 Service Term - Basic Local Area			UEP93	UEPYZ	1.15	21.29	15.49	2.85	2.67		7.86				
	2-Wire Voice Grade Port terminated in on Megalink or equivalent - Basic Local Area			UEP93	UEPY9	1.15	21.29	15.49	2.85	2.67		7.86				
	2-Wire Voice Grade Port Terminated on 800 Service Term - Basic Local Area			UEP93	UEPY2	1.15	21.29	15.49	2.85	2.67		7.86				
	2-Wire Voice Grade Port (Centrex)			UEP93	UEPQA	1.15	21.29	15.49	2.85	2.67		7.86				
	2-Wire Voice Grade Port (Centrex 800 termination)			UEP93	UEPQB	1.15	21.29	15.49	2.85	2.67		7.86				
	2-Wire Voice Grade Port (Centrex with Caller ID)1			UEP93	UEPQH	1.15	21.29	15.49	2.85	2.67		7.86				
	2-Wire Voice Grade Port (Centrex from diff Serving Wire Center)2			UEP93	UEPQM	1.15	21.29	15.49	2.85	2.67		7.86				
	2-Wire Voice Grade Port, Diff Serving Wire Center - 800 Service Term			UEP93	UEPQZ	1.15	21.29	15.49	2.85	2.67		7.86				
	2-Wire Voice Grade Port terminated in on Megalink or equivalent			UEP93	UEPQ9	1.15	21.29	15.49	2.85	2.67		7.86				
	2-Wire Voice Grade Port Terminated on 800 Service Term			UEP93	UEPQ2	1.15	21.29	15.49	2.85	2.67		7.86				
Local Switching																
	Centrex Intercom Funtionality, per port			UEP93	URECS	0.8873						7.86				
Local Number Portability																
	Local Number Portability (1 per port)			UEP93	LNCCC	0.35										
Features																
	All Standard Features Offered, per port			UEP93	UEPVF	0.00						7.86				
	All Centrex Control Features Offered, per port			UEP93	UEPVC	0.00						7.86				
NARS																
	Unbundled Network Access Register - Combination			UEP93	UARCX	0.00	0.00	0.00								
	Unbundled Network Access Register - Indial			UEP93	UAR1X	0.00	0.00	0.00								
	Unbundled Network Access Register - Outdial			UEP93	UAROX	0.00	0.00	0.00								
Miscellaneous Terminations																
2-Wire Trunk Side																
	Trunk Side Terminations, each			UEP93	CEND6	10.51	92.18	15.82	52.16	5.30		7.86				
4-Wire Digital (1.544 Megabits)																
	DS1 Circuit Terminations, each			UEP93	M1HD1	74.77	164.86	77.74	60.69	3.86		7.86				
	DS0 Channels Activated, Per Channel			UEP93	M1HDO	0.00	15.09					7.86				
Interoffice Channel Mileage - 2-Wire																
	Interoffice Channel Facilities Termination			UEP93	MIGBC	29.11						7.86				
	Interoffice Channel mileage, per mile or fraction of mile			UEP93	MIGBM	0.01						7.86				
Feature Activations (DS0) Centrex Loops on Channelized DS1 Service																

UNBUNDLED NETWORK ELEMENTS - Kentucky													Attachment: 2		Exhibit: B	
CATEGORY	RATE ELEMENTS	Interim	Zone	BCS	USOC	RATES($)					Svc Order Submitted Elec per LSR	Svc Order Submitted Manually per LSR	Incremental Charge - Manual Svc Order vs. Electronic-1st	Incremental Charge - Manual Svc Order vs. Electronic-Add'l	Incremental Charge - Manual Svc Order vs. Electronic-Disc 1st	Incremental Charge - Manual Svc Order vs. Electronic-Disc Add'l
						Rec	Nonrecurring		Nonrecurring Disconnect		OSS Rates($)					
							First	Add'l	First	Add'l	SOMEC	SOMAN	SOMAN	SOMAN	SOMAN	SOMAN
	D4 Channel Bank Feature Activations															
	Feature Activation on D-4 Channel Bank Centrex Loop Slot			UEP93	1PQWS	0.62						7.86				
	Feature Activation on D-4 Channel Bank FX Line Side Loop Slot			UEP93	1PQW6	0.62						7.86				
	Feature Activation on D-4 Channel Bank FX Trunk Side Loop Slot			UEP93	1PQW7	0.62						7.86				
	Feature Activation on D-4 Channel Bank Centrex Loop Slot - Different Wire Center			UEP93	1PQWP	0.62						7.86				
	Feature Activation on D-4 Channel Bank Private Line Loop Slot			UEP93	1PQWV	0.62						7.86				
	Feature Activation on D-4 Channel Bank Tie Line/Trunk Loop Slot			UEP93	1PQWQ	0.62						7.86				
	Feature Activation on D-4 Channel Bank WATS Loop Slot			UEP93	1PQWA	0.62						7.86				
	Non-Recurring Charges (NRC) Associated with UNE-P Centrex															
	NRC Conversion Currently Combined Switch-As-Is with allowed changes, per port			UEP93	USAC2		0.102	0.102				7.86				
	Conversion of Existing Centrex Common Block, each			UEP93	USACN		18.95	8.32				7.86				
	New Centrex Standard Common Block			UEP93	M1ACS	0.00	669.80	78.32	111.05	13.27		7.86				
	New Centrex Customized Common Block			UEP93	M1ACC	0.00	669.80	78.32	111.05	13.27		7.86				
	NAR Establishment Charge, Per Occasion			UEP93	URECA	0.00	72.75					7.86				
	Note 1 - Required Port for Centrex Control in 1AESS, 5ESS & EWSD															
	Note 2 - Requres Interoffice Channel Mileage															
	Note 3 - Requires Specific Customer Premises Equipment															
	NOTE: Rates displaying an "R" in Interim column are interim and subject to rate true-up as set forth in General Terms and Conditions.															

UNBUNDLED NETWORK ELEMENTS - Louisiana													Attachment: 2		Exhibit: B	
CATEGORY	RATE ELEMENTS	Interim	Zone	BCS	USOC	RATES($)					Svc Order Submitted Elec per LSR	Svc Order Submitted Manually per LSR	Incremental Charge - Manual Svc Order vs. Electronic-1st	Incremental Charge - Manual Svc Order vs. Electronic-Add'l	Incremental Charge - Manual Svc Order vs. Electronic-Disc 1st	Incremental Charge - Manual Svc Order vs. Electronic-Disc Add'l
						Rec	Nonrecurring		Nonrecurring Disconnect		OSS Rates($)					
							First	Add'l	First	Add'l	SOMEC	SOMAN	SOMAN	SOMAN	SOMAN	SOMAN
OPERATIONAL SUPPORT SYSTEMS																
	NOTE: (1) Electronic Service Order: CLEC should contact its contract negotiator if it prefers the state specific electronic service ordering charges as ordered by the State Commissions. The electronic service ordering charge currently contained in this rate exhibit is the BellSouth regional electronic service ordering charge. CLEC may elect either the state specific Commission ordered rates for the electronic service ordering charges, or CLEC may elect the regional electronic service ordering charge.															
	NOTE: (2) Any element that can be ordered electronically will be billed according to the SOMEC rate listed in this category. Please refer to BellSouth's Business Rules for Local Ordering (BBR-LO) to determine if a product can be ordered electronically. For those elements that cannot be ordered electronically at present per the BBR-LO, the listed SOMEC rate in this category reflects the charge that would be billed to a CLEC once electronic ordering capabilities come on-line for that element. Otherwise, the manual ordering charge, SOMAN, will be applied to a CLECs bill when it submits an LSR to BellSouth.															
	Electronic OSS Charge, per LSR, submitted via BST's OSS interactive interfaces (Regional)				SOMEC		3.50									
UNBUNDLED EXCHANGE ACCESS LOOP																
2-WIRE ANALOG VOICE GRADE LOOP																
	2-Wire Analog Voice Grade Loop - Service Level 1- Zone 1		1	UEANL	UEAL2	12.90	36.54	16.87				15.20				
	2-Wire Analog Voice Grade Loop - Service Level 1- Zone 2		2	UEANL	UEAL2	23.33	36.54	16.87				15.20				
	2-Wire Analog Voice Grade Loop - Service Level 1- Zone 3		3	UEANL	UEAL2	48.43	36.54	16.87				15.20				
	Loop Testing - Basic 1st Half Hour			UEANL	URET1		33.17	33.17				15.20				
	Loop Testing - Basic Additional Half Hour			UEANL	URETA		19.28	19.28				15.20				
	CLEC to CLEC Conversion Charge Without Outside Dispatch (UVL-SL1)			UEANL	UREWO		15.75	8.93				15.20				
	Engineering Information Document (EI)			UEANL			13.04	13.04								
	Manual Order Coordination for UVL-SL1s (per loop)			UEANL	UEAMC		7.92	7.92								
	Order Coordination for Specified Conversion Time for UVL-SL1 (per LSR)			UEANL	OCOSL		17.56	17.56								
2-WIRE Unbundled COPPER LOOP																
	2-Wire Unbundled Copper Loop - Non-Designed Zone 1	I	1	UEQ	UEQ2X	12.40	35.27	15.60				15.20				
	2 Wire Unbundled Copper Loop - Non-Designed - Zone 2	I	2	UEQ	UEQ2X	14.32	35.27	15.60				15.20				
	2 Wire Unbundled Copper Loop - Non-Designed - Zone 3	I	3	UEQ	UEQ2X	16.87	35.27	15.60				15.20				
	Order Coordination 2 Wire Unbundled Copper Loop - Non-Designed (per loop)			UEQ	USBMC		7.92	7.92								
	Engineering Information Document			UEQ			13.04	13.04								
	Loop Testing - Basic 1st Half Hour			UEQ	URET1		33.17	33.17				15.20				
	Loop Testing - Basic Additional Half Hour			UEQ	URETA		19.28	19.28				15.20				
	CLEC to CLEC Conversion Charge Without Outside Dispatch (UCL-ND)			UEQ	UREWO		14.25	7.42				15.20				
UNBUNDLED EXCHANGE ACCESS LOOP																
2-WIRE ANALOG VOICE GRADE LOOP																
	2 Wire Analog Voice Grade Loop-Service Level 1-Line Splitting-Zone 1		1	UEPSR UEPSB	UEALS	12.90	36.54	16.87	0.00	0.00		15.20				
	2 Wire Analog Voice Grade Loop-Service Level 1-Line Splitting-Zone 1		1	UEPSR UEPSB	UEABS	12.90	36.54	16.87	0.00	0.00		15.20				
	2 Wire Analog Voice Grade Loop- Service Level 1-Line Splitting-Zone 2		2	UEPSR UEPSB	UEALS	23.33	36.54	16.87	0.00	0.00		15.20				
	2 Wire Analog Voice Grade Loop- Service Level 1-Line Splitting-Zone 2		2	UEPSR UEPSB	UEABS	23.33	36.54	16.87	0.00	0.00		15.20				
	2 Wire Analog Voice Grade Loop-Service Level 1-Line Splitting-Zone 3		3	UEPSR UEPSB	UEALS	48.43	36.54	16.87	0.00	0.00		15.20				
	2 Wire Analog Voice Grade Loop-Service Level 1-Line Splitting-Zone 3		3	UEPSR UEPSB	UEABS	48.43	36.54	16.87	0.00	0.00		15.20				
UNBUNDLED EXCHANGE ACCESS LOOP																
2-WIRE ANALOG VOICE GRADE LOOP																
	2-Wire Analog Voice Grade Loop - Service Level 2 w/Loop or Ground Start Signaling - Zone 1		1	UEA	UEAL2	14.93	102.10	65.72								
	2-Wire Analog Voice Grade Loop - Service Level 2 w/Loop or Ground Start Signaling - Zone 2		2	UEA	UEAL2	25.35	102.10	65.72				15.20				
	2-Wire Analog Voice Grade Loop - Service Level 2 w/Loop or Ground Start Signaling - Zone 3		3	UEA	UEAL2	50.46	102.10	65.72				15.20				
	Order Coordination for Specified Conversion Time (per LSR)			UEA	OCOSL		17.56									
	2-Wire Analog Voice Grade Loop - Service Level 2 w/Reverse Battery Signaling - Zone 1		1	UEA	UEAR2	14.93	102.10	65.72				15.20				

CATEGORY	RATE ELEMENTS	Interim	Zone	BCS	USOC	RATES($) Rec	Nonrecurring First	Nonrecurring Add'l	Nonrecurring Disconnect First	Nonrecurring Disconnect Add'l	Svc Order Submitted Elec per LSR	Svc Order Submitted Manually per LSR	OSS Rates($) Incremental Charge - Manual Svc Order vs. Electronic-1st	Incremental Charge - Manual Svc Order vs. Electronic-Add'l	Incremental Charge - Manual Svc Order vs. Electronic-Disc 1st	Incremental Charge - Manual Svc Order vs. Electronic-Disc Add'l
											SOMEC	SOMAN	SOMAN	SOMAN	SOMAN	SOMAN
	2-Wire Analog Voice Grade Loop - Service Level 2 w/Reverse Battery Signaling - Zone 2		2	UEA	UEAR2	25.35	102.10	65.72				15.20				
	2-Wire Analog Voice Grade Loop - Service Level 2 w/Reverse Battery Signaling - Zone 3		3	UEA	UEAR2	50.46	102.10	65.72				15.20				
	Order Coordination for Specified Conversion Time (per LSR)			UEA	OCOSL		17.56									
	CLEC to CLEC Conversion Charge without outside dispatch			UEA	UREWO		87.59	36.30				15.20				
4-WIRE ANALOG VOICE GRADE LOOP																
	4-Wire Analog Voice Grade Loop - Zone 1		1	UEA	UEAL4	30.81	127.40	91.02				15.20				
	4-Wire Analog Voice Grade Loop - Zone 2		2	UEA	UEAL4	38.32	127.40	91.02				15.20				
	4-Wire Analog Voice Grade Loop - Zone 3		3	UEA	UEAL4	60.39	127.40	91.02				15.20				
	Order Coordination for Specified Conversion Time (per LSR)			UEA	OCOSL		17.56									
	CLEC to CLEC Conversion Charge without outside dispatch			UEA	UREWO		87.59	36.30				15.20				
2-WIRE ISDN DIGITAL GRADE LOOP																
	2-Wire ISDN Digital Grade Loop - Zone 1		1	UDN	U1L2X	22.09	113.34	76.96				15.20				
	2-Wire ISDN Digital Grade Loop - Zone 2		2	UDN	U1L2X	35.28	113.34	76.96				15.20				
	2-Wire ISDN Digital Grade Loop - Zone 3		3	UDN	U1L2X	65.18	113.34	76.96				15.20				
	Order Coordination For Specified Conversion Time (per LSR)			UDN	OCOSL		17.56									
	CLEC to CLEC Conversion Charge without outside dispatch			UDN	UREWO		91.49	44.09				15.20				
2-WIRE Universal Digital Channel (UDC) COMPATIBLE LOOP																
	2-Wire Universal Digital Channel (UDC) Compatible Loop - Zone 1		1	UDC	UDC2X	22.09	113.34	76.96				15.20				
	2-Wire Universal Digital Channel (UDC) Compatible Loop - Zone 2		2	UDC	UDC2X	35.28	113.34	76.96				15.20				
	2-Wire Universal Digital Channel (UDC) Compatible Loop - Zone 3		3	UDC	UDC2X	65.18	113.34	76.96				15.20				
	CLEC to CLEC Conversion Charge without outside dispatch			UDC	UREWO		91.49	44.09				15.20				
2-WIRE ASYMMETRICAL DIGITAL SUBSCRIBER LINE (ADSL) COMPATIBLE LOOP																
	2 Wire Unbundled ADSL Loop including manual service inquiry & facility reservation - Zone 1		1	UAL	UAL2X	12.29	117.08	68.36				15.20				
	2 Wire Unbundled ADSL Loop including manual service inquiry & facility reservation - Zone 2		2	UAL	UAL2X	14.09	117.08	68.36				15.20				
	2 Wire Unbundled ADSL Loop including manual service inquiry & facility reservation - Zone 3		3	UAL	UAL2X	15.75	117.08	68.36				15.20				
	Order Coordination for Specified Conversion Time (per LSR)			UAL	OCOSL		17.56									
	2 Wire Unbundled ADSL Loop without manual service inquiry & facility reservaton - Zone 1		1	UAL	UAL2W	12.29	92.83	56.02				15.20				
	2 Wire Unbundled ADSL Loop without manual service inquiry & facility reservaton - Zone 2		2	UAL	UAL2W	14.09	92.83	56.02				15.20				
	2 Wire Unbundled ADSL Loop without manual service inquiry & facility reservaton - Zone 3		3	UAL	UAL2W	15.75	92.83	56.02				15.20				
	Order Coordination for Specified Conversion Time (per LSR)			UAL	OCOSL		17.56									
	CLEC to CLEC Conversion Charge without outside dispatch			UAL	UREWO		86.07	40.34				15.20				
2-WIRE HIGH BIT RATE DIGITAL SUBSCRIBER LINE (HDSL) COMPATIBLE LOOP																
	2 Wire Unbundled HDSL Loop including manual service inquiry & facility reservation - Zone 1		1	UHL	UHL2X	9.79	125.50	76.77				15.20				
	2 Wire Unbundled HDSL Loop including manual service inquiry & facility reservation - Zone 2		2	UHL	UHL2X	11.52	125.50	76.77				15.20				
	2 Wire Unbundled HDSL Loop including manual service inquiry & facility reservation - Zone 3		3	UHL	UHL2X	12.74	125.50	76.77				15.20				
	Order Coordination for Specified Conversion Time (per LSR)			UHL	OCOSL		17.56									
	2 Wire Unbundled HDSL Loop without manual service inquiry and facility reservation - Zone 1		1	UHL	UHL2W	9.79	101.24	64.43				15.20				
	2 Wire Unbundled HDSL Loop without manual service inquiry and facility reservation - Zone 2		2	UHL	UHL2W	11.52	101.24	64.43				15.20				
	2 Wire Unbundled HDSL Loop without manual service inquiry and facility reservation - Zone 3		3	UHL	UHL2W	12.74	101.24	64.43				15.20				
	Order Coordination for Specified Conversion Time (per LSR)			UHL	OCOSL		17.56									
	CLEC to CLEC Conversion Charge without outside dispatch			UHL	UREWO		86.00	40.34				15.20				
4-WIRE HIGH BIT RATE DIGITAL SUBSCRIBER LINE (HDSL) COMPATIBLE LOOP																

CATEGORY		RATE ELEMENTS	Interim	Zone	BCS	USOC	RATES($)					Svc Order Submitted Elec per LSR	Svc Order Submitted Manually per LSR	Incremental Charge - Manual Svc Order vs. Electronic-1st	Incremental Charge - Manual Svc Order vs. Electronic-Add'l	Incremental Charge - Manual Svc Order vs. Electronic-Disc 1st	Incremental Charge - Manual Svc Order vs. Electronic-Disc Add'l
							Rec	Nonrecurring		Nonrecurring Disconnect		OSS Rates($)					
								First	Add'l	First	Add'l	SOMEC	SOMAN	SOMAN	SOMAN	SOMAN	SOMAN
		4 Wire Unbundled HDSL Loop including manual service inquiry and facility reservation - Zone 1		1	UHL	UHL4X	16.24	153.26	104.54				15.20				
		4-Wire Unbundled HDSL Loop including manual service inquiry and facility reservation - Zone 2		2	UHL	UHL4X	16.65	153.26	104.54				15.20				
		4-Wire Unbundled HDSL Loop including manual service inquiry and facility reservation - Zone 3		3	UHL	UHL4X	17.34	153.26	104.54				15.20				
		Order Coordination for Specified Conversion Time (per LSR)			UHL	OCOSL		17.56									
		4-Wire Unbundled HDSL Loop without manual service inquiry and facility reservation - Zone 1		1	UHL	UHL4W	16.24	129.00	92.20				15.20				
		4-Wire Unbundled HDSL Loop without manual service inquiry and facility reservation - Zone 2		2	UHL	UHL4W	16.65	129.00	92.20				15.20				
		4-Wire Unbundled HDSL Loop without manual service inquiry and facility reservation - Zone 3		3	UHL	UHL4W	17.34	129.00	92.20				15.20				
		Order Coordination for Specified Conversion Time (per LSR)			UHL	OCOSL		17.56									
		CLEC to CLEC Conversion Charge without outside dispatch			UHL	UREWO		86.00	40.34				15.20				
	4-WIRE DS1 DIGITAL LOOP																
		4-Wire DS1 Digital Loop - Zone 1		1	USL	USLXX	85.70	245.16	152.98				15.20				
		4-Wire DS1 Digital Loop - Zone 2		2	USL	USLXX	194.96	245.16	152.98				15.20				
		4-Wire DS1 Digital Loop - Zone 3		3	USL	USLXX	491.94	245.16	152.98				15.20				
		Order Coordination for Specified Conversion Time (per LSR)			USL	OCOSL		17.56									
		CLEC to CLEC Conversion Charge without outside dispatch			USL	UREWO		100.93	42.98				15.20				
	4-WIRE 19.2, 56 OR 64 KBPS DIGITAL GRADE LOOP																
		4 Wire Unbundled Digital 19.2 Kbps		1	UDL	UDL19	30.99	121.86	85.48				15.20				
		4 Wire Unbundled Digital 19.2 Kbps		2	UDL	UDL19	36.78	121.86	85.48				15.20				
		4 Wire Unbundled Digital 19.2 Kbps		3	UDL	UDL19	38.92	121.86	85.48				15.20				
		4 Wire Unbundled Digital Loop 56 Kbps - Zone 1		1	UDL	UDL56	30.99	121.86	85.48				15.20				
		4 Wire Unbundled Digital Loop 56 Kbps - Zone 2		2	UDL	UDL56	36.78	121.86	85.48				15.20				
		4 Wire Unbundled Digital Loop 56 Kbps - Zone 3		3	UDL	UDL56	38.92	121.86	85.48				15.20				
		Order Coordination for Specified Conversion Time (per LSR)			UDL	OCOSL		17.56									
		4 Wire Unbundled Digital Loop 64 Kbps - Zone 1		1	UDL	UDL64	30.99	121.86	85.48				15.20				
		4 Wire Unbundled Digital Loop 64 Kbps - Zone 2		2	UDL	UDL64	36.78	121.86	85.48				15.20				
		4 Wire Unbundled Digital Loop 64 Kbps - Zone 3		3	UDL	UDL64	38.92	121.86	85.48				15.20				
		Order Coordination for Specified Conversion Time (per LSR)			UDL	OCOSL		17.56									
		CLEC to CLEC Conversion Charge without outside dispatch			UDL	UREWO		101.97	49.67				15.20				
	2-WIRE Unbundled COPPER LOOP																
		2-Wire Unbundled Copper Loop/Short including manual service inquiry & facility reservation - Zone 1		1	UCL	UCLPB	12.29	116.18	67.46				15.20				
		2-Wire Unbundled Copper Loop/Short including manual service inquiry & facility reservation - Zone 2		2	UCL	UCLPB	14.09	116.18	67.46				15.20				
		2 Wire Unbundled Copper Loop/Short including manual service inquiry & facility reservation - Zone 3		3	UCL	UCLPB	15.75	116.18	67.46				15.20				
		Order Coordination for Unbundled Copper Loops (per loop)			UCL	UCLMC		7.92	7.92								
		2-Wire Unbundled Copper Loop/Short without manual service inquiry and facility reservation - Zone 1		1	UCL	UCLPW	12.29	91.92	55.12				15.20				
		2-Wire Unbundled Copper Loop/Short without manual service inquiry and facility reservation - Zone 2		2	UCL	UCLPW	14.09	91.92	55.12				15.20				
		2-Wire Unbundled Copper Loop/Short without manual service inquiry and facility reservation - Zone 3		3	UCL	UCLPW	15.75	91.92	55.12				15.20				
		Order Coordination for Unbundled Copper Loops (per loop)			UCL	UCLMC		7.92	7.92								
		2-Wire Unbundled Copper Loop/Long - includes manual srvc. inquiry and facility reservation - Zone 1		1	UCL	UCL2L	17.21	116.18	67.46				15.20				
		2-Wire Unbundled Copper Loop/Long - includes manual svc. inquiry and facility reservation - Zone 2		2	UCL	UCL2L	24.98	116.18	67.46				15.20				
		2-Wire Unbundled Copper Loop/Long - includes manual svc. inquiry and facility reservation - Zone 3		3	UCL	UCL2L	39.57	116.18	67.46				15.20				
		Order Coordination for Unbundled Copper Loops (per loop)			UCL	UCLMC		7.92	7.92								
		2-Wire Unbundled Copper Loop/Long - without manual service inquiry and facility reservation - Zone 1		1	UCL	UCL2W	17.21	91.92	55.12				15.20				

UNBUNDLED NETWORK ELEMENTS - Louisiana														Attachment: 2		Exhibit: B	
CATEGORY		RATE ELEMENTS	Interim	Zone	BCS	USOC	RATES($)					Svc Order Submitted Elec per LSR	Svc Order Submitted Manually per LSR	Incremental Charge - Manual Svc Order vs. Electronic-1st	Incremental Charge - Manual Svc Order vs. Electronic-Add'l	Incremental Charge - Manual Svc Order vs. Electronic-Disc 1st	Incremental Charge - Manual Svc Order vs. Electronic-Disc Add'l
							Rec	Nonrecurring		Nonrecurring Disconnect		OSS Rates($)					
								First	Add'l	First	Add'l	SOMEC	SOMAN	SOMAN	SOMAN	SOMAN	SOMAN
		2-Wire Unbundled Copper Loop/Long - without manual service inquiry and facility reservation - Zone 2		2	UCL	UCL2W	24.98	91.92	55.12				15.20				
		2-Wire Unbundled Copper Loop/Long - without manual service inquiry and facility reservation - Zone 3		3	UCL	UCL2W	39.57	91.92	55.12				15.20				
		Order Coordination for Unbundled Copper Loops (per loop)			UCL	UCLMC		7.92	7.92								
		CLEC to CLEC Conversion Charge without outside dispatch (UCL-Des)			UCL	UREWO		91.92	42.47				15.20				
	4-WIRE COPPER LOOP																
		4-Wire Copper Loop/Short - including manual service inquiry and facility reservation - Zone 1		1	UCL	UCL4S	22.27	139.69	90.96				15.20				
		4-Wire Copper Loop/Short - including manual service inquiry and facility reservation - Zone 2		2	UCL	UCL4S	18.95	139.69	90.96				15.20				
		4-Wire Copper Loop/Short - including manual service inquiry and facility reservation - Zone 3		3	UCL	UCL4S	10.99	139.69	90.96				15.20				
		Order Coordination for Unbundled Copper Loops (per loop)			UCL	UCLMC		7.92	7.92								
		4-Wire Copper Loop/Short - without manual service inquiry and facility reservation - Zone 1		1	UCL	UCL4W	22.27	115.43	78.63				15.20				
		4-Wire Copper Loop/Short - without manual service inquiry and facility reservation - Zone 2		2	UCL	UCL4W	18.95	115.43	78.63				15.20				
		4-Wire Copper Loop/Short - without manual service inquiry and facility reservation - Zone 3		3	UCL	UCL4W	10.99	115.43	78.63				15.20				
		Order Coordination for Unbundled Copper Loops (per loop)			UCL	UCLMC		7.92	7.92								
		4-Wire Unbundled Copper Loop/Long - includes manual svc. inquiry and facility reservation - Zone 1		1	UCL	UCL4L	26.17	139.69	90.96				15.20				
		4-Wire Unbundled Copper Loop/Long - includes manual svc. inquiry and facility reservation - Zone 2		2	UCL	UCL4L	28.47	139.69	90.96				15.20				
		4-Wire Unbundled Copper Loop/Long - includes manual svc. inquiry and facility reservation - Zone 3		3	UCL	UCL4L	62.93	139.69	90.96				15.20				
		Order Coordination for Unbundled Copper Loops (per loop)			UCL	UCLMC		7.92	7.92								
		4-Wire Unbundled Copper Loop/Long - without manual svc. inquiry and facility reservation - Zone 1		1	UCL	UCL4O	26.17	115.43	78.63				15.20				
		4-Wire Unbundled Copper Loop/Long - without manual svc. inquiry and facility reservation - Zone 2		2	UCL	UCL4O	28.47	115.43	78.63				15.20				
		4-Wire Unbundled Copper Loop/Long - without manual svc. inquiry and facility reservation - Zone 3		3	UCL	UCL4O	62.93	115.43	78.63				15.20				
		Order Coordination for Unbundled Copper Loops (per loop)			UCL	UCLMC		7.92	7.92								
		CLEC to CLEC Conversion Charge without outside dispatch (UCL-Des)			UCL	UREWO		91.92	42.47				15.20				
LOOP MODIFICATION																	
		Unbundled Loop Modification, Removal of Load Coils - 2 Wire pair less than or equal to 18k ft			UAL, UHL, UCL, UEQ, ULS, UEA, UEANL, UDL, UDC, UDN, UDL, USL	ULM2L		0.00	0.00				15.20				
		Unbundled Loop Modification, Removal of Load Coils - 2 wire greater than 18k ft			UCL, ULS	ULM2G		0.00	0.00				15.20				
		Unbundled Loop Modification Removal of Load Coils - 4 Wire less than or equal to 18K ft			UHL, UCL	ULM4L		0.00	0.00				15.20				
		Unbundled Loop Modification Removal of Load Coils - 4 Wire pair greater than 18k ft			UCL	ULM4G		0.00	0.00				15.20				
		Unbundled Loop Modification Removal of Bridged Tap Removal, per unbundled loop			UAL, UHL, UCL, UEQ, UEF, ULS, UEA, UEANL, UDL, UDC, UDN, UDL, USL	ULMBT		12.15	12.15				15.20				
SUB-LOOPS																	
	Sub-Loop Distribution																
		Sub-Loop - Per Cross Box Location - CLEC Feeder Facility Set-Up	I		UEANL	USBSA		144.09	144.09				15.20				

UNBUNDLED NETWORK ELEMENTS - Louisiana													Attachment: 2		Exhibit: B	
CATEGORY	RATE ELEMENTS	Interim	Zone	BCS	USOC	RATES($)					Svc Order Submitted Elec per LSR	Svc Order Submitted Manually per LSR	Incremental Charge - Manual Svc Order vs. Electronic-1st	Incremental Charge - Manual Svc Order vs. Electronic-Add'l	Incremental Charge - Manual Svc Order vs. Electronic-Disc 1st	Incremental Charge - Manual Svc Order vs. Electronic-Disc Add'l
						Rec	Nonrecurring		Nonrecurring Disconnect		OSS Rates($)					
							First	Add'l	First	Add'l	SOMEC	SOMAN	SOMAN	SOMAN	SOMAN	SOMAN
	Sub-Loop - Per Cross Box Location - Per 25 Pair Panel Set-Up	I		UEANL	USBSB		10.99	10.99				15.20				
	Sub-Loop - Per Building Equipment Room - CLEC Feeder Facility Set-Up	I		UEANL	USBSC		86.16	86.16				15.20				
	Sub-Loop - Per Building Equipment Room - Per 25 Pair Panel Set-Up	I		UEANL	USBSD		27.13	27.13				15.20				
	Sub-Loop Distribution Per 2-Wire Analog Voice Grade Loop - Zone 1	I	1	UEANL	USBN2	7.57	63.89	30.06				15.20				
	Sub-Loop Distribution Per 2-Wire Analog Voice Grade Loop - Zone 2	I	2	UEANL	USBN2	12.75	63.89	30.06				15.20				
	Sub-Loop Distribution Per 2-Wire Analog Voice Grade Loop - Zone 3	I	3	UEANL	USBN2	21.45	63.89	30.06				15.20				
	Order Coordination for Unbundled Sub-Loops, per sub-loop pair			UEANL	USBMC		7.92	7.92								
	Sub-Loop Distribution Per 4-Wire Analog Voice Grade Loop - Zone 1		1	UEANL	USBN4	11.76	76.75	42.92				15.20				
	Sub-Loop Distribution Per 4-Wire Analog Voice Grade Loop - Zone 2		2	UEANL	USBN4	16.84	76.75	42.92				15.20				
	Sub-Loop Distribution Per 4-Wire Analog Voice Grade Loop - Zone 3		3	UEANL	USBN4	19.27	76.75	42.92				15.20				
	Order Coordination for Unbundled Sub-Loops, per sub-loop pair			UEANL	USBMC		7.92	7.92								
	Sub-Loop 2-Wire Intrabuilding Network Cable (INC)	I		UEANL	USBR2	2.91	51.48	17.65				15.20				
	Order Coordination for Unbundled Sub-Loops, per sub-loop pair			UEANL	USBMC		7.92	7.92								
	Sub-Loop 4-Wire Intrabuilding Network Cable (INC)	I		UEANL	USBR4	6.58	57.54	23.71				15.20				
	Order Coordination for Unbundled Sub-Loops, per sub-loop pair			UEANL	USBMC		7.92	7.92								
	2 Wire Copper Unbundled Sub-Loop Distribution - Zone 1	I	1	UEF	UCS2X	6.26	63.89	30.06				15.20				
	2 Wire Copper Unbundled Sub-Loop Distribution - Zone 2	I	2	UEF	UCS2X	10.07	63.89	30.06				15.20				
	2 Wire Copper Unbundled Sub-Loop Distribution - Zone 3	I	3	UEF	UCS2X	12.70	63.89	30.06				15.20				
	Order Coordination for Unbundled Sub-Loops, per sub-loop pair			UEF	USBMC		7.92	7.92								
	4 Wire Copper Unbundled Sub-Loop Distribution - Zone 1	I	1	UEF	UCS4X	8.03	76.75	42.92				15.20				
	4 Wire Copper Unbundled Sub-Loop Distribution - Zone 2	I	2	UEF	UCS4X	10.71	76.75	42.92				15.20				
	4 Wire Copper Unbundled Sub-Loop Distribution - Zone 3	I	3	UEF	UCS4X	6.08	76.75	42.92				15.20				
	Order Coordination for Unbundled Sub-Loops, per sub-loop pair			UEF	USBMC		7.92	7.92								
Unbundled Sub-Loop Modification																
	Unbundled Sub-Loop Modification - 2-W Copper Dist Load Coil/Equip Removal per 2-W PR			UEF	ULM2X		0.00	0.00				15.20				
	Unbundled Sub-loop Modification - 4-W Copper Dist Load Coil/Equip Removal per 4-W PR			UEF	ULM4X		0.00	0.00				15.20				
	Unbundled Sub-loop Modification - 2-w/4-w Copper Dist Bridged Tap Removal, per PR unloaded			UEF	ULM4T		224.55	4.29				15.20				
Unbundled Network Terminating Wire (UNTW)																
	Unbundled Network Terminating Wire (UNTW) per Pair			UENTW	UENPP	0.3454	14.72	14.72				15.20				
Network Interface Device (NID)																
	Network Interface Device (NID) - 1-2 lines			UENTW	UND12		42.26	27.83				15.20				
	Network Interface Device (NID) - 1-6 lines			UENTW	UND16		62.86	48.43				15.20				
	Network Interface Device Cross Connect - 2 W			UENTW	UNDC2		5.73	5.73				15.20				
	Network Interface Device Cross Connect - 4W			UENTW	UNDC4		5.73	5.73				15.20				
SUB-LOOPS																
Sub-Loop Feeder																
	USL-Feeder, DS0 Set-up per Cross Box location - CLEC Distribution Facility set-up			UEA, UDN,UCL,UDL,UDC	USBFW		144.09					15.20				
	USL Feeder - DS0 Set-up per Cross Box location - per 25 pair set-up			UEA, UDN,UCL,UDL,UDC	USBFX		10.99	10.99				15.20				
	USL Feeder DS1 Set-up at DSX location, per DS1 termination			USL	USBFZ		568.98	11.30				15.20				

CATEGORY		RATE ELEMENTS	Interim	Zone	BCS	USOC	RATES($)					Svc Order Submitted Elec per LSR	Svc Order Submitted Manually per LSR	Incremental Charge - Manual Svc Order vs. Electronic-1st	Incremental Charge - Manual Svc Order vs. Electronic-Add'l	Incremental Charge - Manual Svc Order vs. Electronic-Disc 1st	Incremental Charge - Manual Svc Order vs. Electronic-Disc Add'l
							Rec	Nonrecurring		Nonrecurring Disconnect		OSS Rates($)					
								First	Add'l	First	Add'l	SOMEC	SOMAN	SOMAN	SOMAN	SOMAN	SOMAN
		Unbundled Sub-Loop Feeder Loop, 2 Wire Ground Start, Voice Grade - Zone 1		1	UEA	USBFA	8.71	89.81	54.35				15.20				
		Unbundled Sub-Loop Feeder Loop, 2 Wire Ground-Start, Voice Grade - Zone 2		2	UEA	USBFA	13.64	89.81	54.35				15.20				
		Unbundled Sub-Loop Feeder Loop, Per 2 Wire Ground-Start, Voice Grade - Zone 3		3	UEA	USBFA	30.21	89.81	54.35				15.20				
		Order Coordination for Specified Conversion Time, per LSR			UEA	OCOSL		17.56									
		Unbundlde Sub-Loop Feeder Loop, 2 Wire Loop-Start, Voice Grade - Zone 1		1	UEA	USBFB	8.71	89.81	54.35				15.20				
		Unbundled Sub-Loop Feeder Loop, 2 Wire Loop-Start, Voice Grade - Zone 2		2	UEA	USBFB	13.64	89.81	54.35				15.20				
		Unbundled Sub-Loop Feeder Loop, 2 Wire Start Loop, Voice Grade - Zone 3		3	UEA	USBFB	30.21	89.81	54.35				15.20				
		Order Coordination for Specified Time Conversion, per LSR			UEA	OCOSL		17.56									
		Unbundled Sub-Loop Feeder Loop, 2 Wire Reverse Battery, Voice Grade - Zone 1		1	UEA	USBFC	8.71	89.81	54.35				15.20				
		Unbundled Sub-Loop Feeder Loop, 2 Wire Reverse Battery, Voice Grade - Zone 2		2	UEA	USBFC	13.64	89.81	54.35				15.20				
		Unbundled Sub-Loop Feeder Loop, 2 Wire Analog Reverse Battery, Voice Grade - Zone 3		3	UEA	USBFC	30.21	89.81	54.35				15.20				
		Order Coordination For Specified Conversion Time, per LSR			UEA	OCOSL		17.56									
		Unbundled Sub-Loop Feeder Loop, 4 Wire Ground-Start, Voice Grade - Zone 1		1	UEA	USBFD	21.44	103.69	67.31				15.20				
		Unbundled Sub-Loop Feeder Loop, 4 Wire Ground-Start, Voice Grade - Zone 2		2	UEA	USBFD	24.66	103.69	67.31				15.20				
		Unbundled Sub-Loop Feeder Loop, 4 Wire Ground Start, Voice Grade - Zone 3		3	UEA	USBFD	42.84	103.69	67.31				15.20				
		Order Coordination For Specified Conversion Time, Per LSR			UEA	OCOSL		17.56									
		Unbundled Sub-Loop Feeder Loop, 4 Wire Loop-Start, Voice Grade - Zone 1		1	UEA	USBFE	21.44	103.69	67.31				15.20				
		Unbundled Sub-Loop Feeder Loop, 4 Wire Loop-Start, Voice Grade - Zone 2		2	UEA	USBFE	24.66	103.69	67.31				15.20				
		Unbundled Sub-Loop Feeder Loop, 4 Wire Loop-Start, Voice Grade - Zone 3		3	UEA	USBFE	42.84	103.69	67.31				15.20				
		Order Coordination For Specified Conversion Time, Per LSR			UEA	OCOSL		17.56									
		Unbundled Sub-Loop Feeder Loop, 2 Wire ISDN BRI - Zone 1		1	UDN	USBFF	15.44	102.58	66.20				15.20				
		Unbundled Sub-Loop Feeder Loop, 2-Wire ISDN BRI - Zone 2		2	UDN	USBFF	23.32	102.58	66.20				15.20				
		Unbundled Sub-Loop Feeder Loop, 2-Wire ISDN BRI - Zone 3		3	UDN	USBFF	44.57	102.58	66.20				15.20				
		Order Coordination For Specified Conversion Time, Per LSR			UDN	OCOSL		17.56									
		Unbundled Sub-Loop Feeder, 2 Wire UDC (IDSL compatible)		1	UDC	USBFS	15.44	102.58	66.20				15.20				
		Unbundled Sub-Loop Feeder, 2 Wire UDC (IDSL compatible)		2	UDC	USBFS	23.32	102.58	66.20				15.20				
		Unbundled Sub-Loop Feeder, 2 Wire UDC (IDSL compatible)		3	UDC	USBFS	44.57	102.58	66.20				15.20				
		Unbundled Sub-Loop Feeder Loop, 4-Wire DS1 - Zone 1		1	USL	USBFG	55.38	98.15	61.77				15.20				
		Unbundled Sub-Loop Feeder Loop, 4-Wire DS1 - Zone 2		2	USL	USBFG	167.83	98.15	61.77				15.20				
		Unbundled Sub-Loop Feeder Loop, 4-Wire DS1 - Zone 3		3	USL	USBFG	469.87	98.15	61.77				15.20				
		Order Coordination For Specified Conversion Time, Per LSR			USL	OCOSL		17.56									
		Unbundled Sub-Loop Feeder, 2-Wire Copper Loop - Zone 1		1	UCL	USBFH	6.96	81.36	44.98				15.20				
		Unbundled Sub-Loop Feeder Loop, 2-Wire Copper Loop - Zone 2		2	UCL	USBFH	4.97	81.36	44.98				15.20				
		Unbundled Sub-Loop Feeder Loop, 2-Wire Copper Loop - Zone 3		3	UCL	USBFH	3.99	81.36	44.98				15.20				
		Order Coordination For Specified Conversion Time, per LSR			UCL	OCOSL		17.56									
		Sub-Loop Feeder - Per 4-Wire Copper Loop - Zone 1		1	UCL	USBFJ	15.68	98.07	61.69				15.20				
		Sub-Loop Feeder - Per 4-Wire Copper Loop - Zone 2		2	UCL	USBFJ	9.68	98.07	61.69				15.20				
		Sub-Loop Feeder - Per 4-Wire Copper Loop - Zone 3		3	UCL	USBFJ	6.39	98.07	61.69				15.20				
		Order Coordination For Specified Conversion Time, per LSR			UCL	OCOSL		17.56									
		Sub-Loop Feeder - Per 4-Wire 19.2 Kbps Digital Grade Loop		1	UDL	USBFN	22.61	98.15	61.77				15.20				
		Sub-Loop Feeder - Per 4-Wire 19.2 Kbps Digital Grade Loop		2	UDL	USBFN	22.87	98.15	61.77				15.20				
		Sub-Loop Feeder - Per 4-Wire 19.2 Kbps Digital Grade Loop		3	UDL	USBFN	24.25	98.15	61.77				15.20				

UNBUNDLED NETWORK ELEMENTS - Louisiana														Attachment: 2		Exhibit: B	
CATEGORY		RATE ELEMENTS	Interim	Zone	BCS	USOC	RATES($)					Svc Order Submitted Elec per LSR	Svc Order Submitted Manually per LSR	Incremental Charge - Manual Svc Order vs. Electronic-1st	Incremental Charge - Manual Svc Order vs. Electronic-Add'l	Incremental Charge - Manual Svc Order vs. Electronic-Disc 1st	Incremental Charge - Manual Svc Order vs. Electronic-Disc Add'l
							Rec	Nonrecurring		Nonrecurring Disconnect		OSS Rates($)					
								First	Add'l	First	Add'l	SOMEC	SOMAN	SOMAN	SOMAN	SOMAN	SOMAN
		Sub-Loop Feeder - Per 4-Wire 56 Kbps Digital Grade Loop - Zone 1		1	UDL	USBFO	22.61	98.15	61.77				15.20				
		Sub-Loop Feeder - Per 4-Wire 56 Kbps Digital Grade Loop - Zone 2		2	UDL	USBFO	22.87	98.15	61.77				15.20				
		Sub-Loop Feeder - Per 4-Wire 56 Kbps Digital Grade Loop - Zone 3		3	UDL	USBFO	24.25	98.15	61.77				15.20				
		Order Coordination For Specified Time Conversion, per LSR			UDL	OCOSL		17.56									
		Sub-Loop Feeder - Per 4-Wire 64 Kbps Digital Grade Loop - Zone 1		1	UDL	USBFP	22.61	98.15	61.77				15.20				
		Sub-Loop Feeder - Per 4-Wire 64 Kbps Digital Grade Loop - Zone 2		2	UDL	USBFP	22.87	98.15	61.77				15.20				
		Sub-Loop Feeder - Per 4-Wire 64 Kbps Digital Grade Loop - Zone 3		3	UDL	USBFP	24.25	98.15	61.77				15.20				
		Order Coordination For Specified Conversion Time, per LSR			UDL	OCOSL		17.56									
SUB-LOOPS																	
	Sub-Loop Feeder																
		Sub Loop Feeder - DS3 - Per Mile Per Month	I		UE3	1L5SL	17.00										
		Sub Loop Feeder - DS3 - Facility Termination Per Month	I		UE3	USBF1	368.44	3,381.00	406.56				15.20				
		Sub Loop Feeder – STS-1 – Per Mile Per Month	I		UDLSX	1L5SL	17.00										
		Sub Loop Feeder - STS-1 - Facility Termination Per Month	I		UDLSX	USBF7	395.92	3,381.00	406.56				15.20				
		Sub Loop Feeder – OC-3 – Per Mile Per Month	I		UDLO3	1L5SL	12.90										
		Sub Loop Feeder - OC-3 - Facility Termination Protection Per Month	I		UDLO3	USBF5	60.45										
		Sub Loop Feeder - OC-3 - Facility Termination Per Month	I		UDLO3	USBF2	594.77	3,381.00	406.56				15.20				
		Sub Loop Feeder - OC-12 - Per Mile Per Month	I		UDL12	1L5SL	15.87										
		Sub Loop Feeder - OC-12 - Facility Termination Protection Per Month	I		UDL12	USBF6	683.03										
		Sub Loop Feeder - OC-12 - Facility Termination Per Month	I		UDL12	USBF3	1,922.00	3,381.00	406.56				15.20				
		Sub Loop Feeder - OC-48 - Per Mile Per Month	I		UDL48	1L5SL	52.07										
		Sub Loop Feeder - OC-48 - Facility Termination Protection Per Month	I		UDL48	USBF9	341.64										
		Sub Loop Feeder - OC-48 - Facility Termination Per Month	I		UDL48	USBF4	1,663.00	3,566.00	406.56				15.20				
		Sub Loop Feeder - OC-12 Interface On OC-48	I		UDL48	USBF8	385.45	787.24	406.56				15.20				
UNBUNDLED LOOP CONCENTRATION																	
		Unbundled Loop Concentration - System A (TR008)			ULC	UCT8A	374.26	316.00	316.00				15.20				
		Unbundled Loop Concentration - System B (TR008)			ULC	UCT8B	53.40	131.67	131.67				15.20				
		Unbundled Loop Concentration - System A (TR303)			ULC	UCT3A	412.08	316.00	316.00				15.20				
		Unbundled Loop Concentration - System B (TR303)			ULC	UCT3B	89.98	131.67	131.67				15.20				
		Unbundled Loop Concentration - DS1 Loop Interface Card			ULC	UCTCO	5.12	61.46	44.74				15.20				
		Unbundled Loop Concentration - ISDN Loop Interface (Brite Card)			UDN	ULCC1	8.12	10.23	10.18				15.20				
		Unbundled Loop Concentration - UDC Loop Interface (Brite Card)			UDC	ULCCU	8.12	10.23	10.18				15.20				
		Unbundled Loop Concentration - -2 Wire Voice-Loop Start or Ground Start Loop Interface (POTS Card)			UEA	ULCC2	2.03	10.23	10.18				15.20				
		Unbundled Loop Concentration - 2 Wire Voice - Reverse Battery Loop Interface (SPOTS Card)			UEA	ULCCR	12.07	10.23	10.18				15.20				
		Unbundled Loop Concentration - 4 Wire Voice Loop Interface (Specials Card)			UEA	ULCC4	7.20	10.23	10.18				15.20				
		Unbundled Loop Concentration - TEST CIRCUIT Card			ULC	UCTTC	35.19	10.23	10.18				15.20				
		Unbundled Loop Concentration - Digital 19.2 Kbps Data Loop Interface			UDL	ULCC7	10.67	10.23	10.18				15.20				
		Unbundled Loop Concentration - Digital 56 Kbps Data Loop Interface			UDL	ULCC5	10.67	10.23	10.18				15.20				
		Unbundled Loop Concentration - Digital 64 Kbps Data Loop Interface			UDL	ULCC6	10.67	10.23	10.18				15.20				
UNE OTHER, PROVISIONING ONLY - NO RATE																	
		NID - Dispatch and Service Order for NID installation			UENTW	UNDBX											
		UNTW Circuit Id Establishment, Provisioning Only - No Rate			UENTW	UENCE											

UNBUNDLED NETWORK ELEMENTS - Louisiana														Attachment: 2		Exhibit: B	
CATEGORY		RATE ELEMENTS	Interim	Zone	BCS	USOC	RATES($)					Svc Order Submitted Elec per LSR	Svc Order Submitted Manually per LSR	Incremental Charge - Manual Svc Order vs. Electronic-1st	Incremental Charge - Manual Svc Order vs. Electronic-Add'l	Incremental Charge - Manual Svc Order vs. Electronic-Disc 1st	Incremental Charge - Manual Svc Order vs. Electronic-Disc Add'l
							Rec	Nonrecurring		Nonrecurring Disconnect		OSS Rates($)					
								First	Add'l	First	Add'l	SOMEC	SOMAN	SOMAN	SOMAN	SOMAN	SOMAN
		Unbundled Contract Name, Provisioning Only - No Rate			UEANL,UEF,UEQ,UENTW	UNECN											
UNE OTHER, PROVISIONING ONLY - NO RATE																	
		Unbundled Contact Name, Provisioning Only - no rate			UAL,UCL,UDC,UDL,UDN,UEA,UHL,ULC	UNECN	0.00	0.00									
		Unbundled Sub-Loop Feeder-2 Wire Cross Box Jumper - no rate			UEA,UDN,UCL,UDC	USBFQ	0.00	0.00									
		Unbundled Sub-Loop Feeder-4 Wire Cross Box Jumper - no rate			UEA,USL,UCL,UDL	USBFR	0.00	0.00									
		Unbundled DS1 Loop - Superframe Format Option - no rate			USL	CCOSF	0.00	0.00									
		Unbundled DS1 Loop - Expanded Superframe Format option - no rate			USL	CCOEF	0.00	0.00									
HIGH CAPACITY UNBUNDLED LOCAL LOOP																	
		High Capacity Unbundled Local Loop - DS3 - Per Mile per month			UE3	1L5ND	10.04										
		High Capacity Unbundled Local Loop - DS3 - Facility Termination per month			UE3	UE3PX	362.34	438.46	256.30				15.20				
		High Capacity Unbundled Local Loop - STS-1 - Per Mile per month			UDLSX	1L5ND	10.04										
		High Capacity Unbundled Local Loop - STS-1 - Facility Termination per month			UDLSX	UDLS1	374.56	438.46	256.30				15.20				
LOOP MAKE-UP																	
		Loop Makeup - Preordering Without Reservation, per working or spare facility queried (Manual).			UMK	UMKLW		23.29	23.29								
		Loop Makeup - Preordering With Reservation, per spare facility queried (Manual).			UMK	UMKLP		24.70	24.70								
		Loop Makeup--With or Without Reservation, per working or spare facility queried (Mechanized)			UMK	PSUMK		0.19	0.19								
HIGH FREQUENCY SPECTRUM																	
	SPLITTERS-CENTRAL OFFICE BASED																
		Line Sharing Splitter, per System 96 Line Capacity			ULS	ULSDA	187.17	183.33	0.00	0.00	0.00		15.20				
		Line Sharing Splitter, per System 24 Line Capacity			ULS	ULSDB	46.79	183.33	0.00	0.00	0.00		15.20				
		Line Sharing Splitter, Per System, 8 Line Capacity	I		ULS	ULSD8	15.59	183.33	0.00	0.00	0.00		15.20				
		Line Sharing-DLEC Owned Splitter in CO-CFA activaton-deactivation (per LSOD)			ULS	ULSDG		83.98		0.00			15.20				
	END USER ORDERING-CENTRAL OFFICE BASED-HIGH FREQUENCY SPECTRUM AKA LINE SHARING																
		Line Sharing - per Line Activation (BST Owned Splitter)			ULS	ULSDC	0.61	17.97	10.29	0.00	0.00		15.20				
		Line Sharing - per Subsequent Activity per Line Rearrangement(BST Owned Splitter)			ULS	ULSDS		15.91	7.95				15.20				
		Line Sharing - per Subsequent Activity per Line Rearrangement(DLEC Owned Splitter)			ULS	ULSCS		15.91	7.95				15.20				
		Line Sharing - per Line Activation (DLEC owned Splitter)	I		ULS	ULSCC	0.61	47.44	19.31	0.00	0.00		15.20				
		Line Splitting - per line activation DLEC owned splitter	I		UEPSR UEPSB	UREOS	0.61										
		Line Splitting - per line activation BST owned - physical	I		UEPSR UEPSB	UREBP	0.642	17.97	10.29								
		Line Splitting - per line activation BST owned - virtual	I		UEPSR UEPSB	UREBV	0.64	17.97	10.29								
UNBUNDLED DEDICATED TRANSPORT																	
	NOTE: INTEROFFICE CHANNEL DEDICATED TRANSPORT - minimum billing period - below DS3=one month, DS3/STS-1=four months																
	INTEROFFICE CHANNEL - DEDICATED TRANSPORT																
		Interoffice Channel - Dedicated Transport - 2-Wire Voice Grade - Per Mile per month			U1TVX	1L5XX	0.013										
		Interoffice Channel - Dedicated Transport- 2- Wire Voice Grade - Facility Termination per month			U1TVX	U1TV2	22.60	39.36	26.62				15.20				
		Interoffice Channel - Dedicated Transpor t- 2-Wire Voice Grade Rev Bat. - Per Mile per month			U1TVX	1L5XX	0.013										
		Interoffice Channel - Dedicated Transport- 2- Wire VG Rev Bat. - Facility Termination per month			U1TVX	U1TR2	22.60	39.36	26.62				15.20				
		Interoffice Channel - Dedicated Transport - 4-Wire Voice Grade - Per Mile per month			U1TVX	1L5XX	0.013										

UNBUNDLED NETWORK ELEMENTS - Louisiana														Attachment: 2		Exhibit: B	
CATEGORY		RATE ELEMENTS	Interim	Zone	BCS	USOC	RATES($)					Svc Order Submitted Elec per LSR	Svc Order Submitted Manually per LSR	Incremental Charge - Manual Svc Order vs. Electronic-1st	Incremental Charge - Manual Svc Order vs. Electronic-Add'l	Incremental Charge - Manual Svc Order vs. Electronic-Disc 1st	Incremental Charge - Manual Svc Order vs. Electronic-Disc Add'l
							Rec	Nonrecurring		Nonrecurring Disconnect		OSS Rates($)					
								First	Add'l	First	Add'l	SOMEC	SOMAN	SOMAN	SOMAN	SOMAN	SOMAN
		Interoffice Channel - Dedicated Transport - 4- Wire Voice Grade - Facility Termination per month			U1TVX	U1TV4	19.81	39.36	26.62				15.20				
		Interoffice Channel - Dedicated Transport - 56 kbps - per mile per month			U1TDX	1L5XX	0.013										
		Interoffice Channel - Dedicated Transport - 56 kbps - Facility Termination per month			U1TDX	U1TD5	15.61	39.37	26.62				15.20				
		Interoffice Channel - Dedicated Transport - 64 kbps - per mile per month			U1TDX	1L5XX	0.013										
		Interoffice Channel - Dedicated Transport - 64 kbps - Facility Termination per month			U1TDX	U1TD6	15.61	39.37	26.62				15.20				
		Interoffice Channel - Dedicated Channel - DS1 - Per Mile per month			U1TD1	1L5XX	0.2652										
		Interoffice Channel - Dedicated Tranport - DS1 - Facility Termination per month			U1TD1	U1TF1	70.47	86.69	79.44				15.20				
		Interoffice Channel - Dedicated Transport - DS3 - Per Mile per month			U1TD3	1L5XX	6.04										
		Interoffice Channel - Dedicated Transport - DS3 - Facility Termination per month			U1TD3	U1TF3	850.45	270.69	158.05				15.20				
		Interoffice Channel - Dedicated Transport - STS-1 - Per Mile per month			U1TS1	1L5XX	6.04										
		Interoffice Channel - Dedicated Transport - STS-1 - Facility Termination per month			U1TS1	U1TFS	830.19	270.69	158.05				15.20				
	LOCAL CHANNEL - DEDICATED TRANSPORT																
	NOTE: LOCAL CHANNEL DEDICATED TRANSPORT - minimum billing period - below DS3=one month, DS3/STS-1=four months																
		Local Channel - Dedicated - 2-Wire Voice Grade Per Month			ULDVX	ULDV2	18.32	187.51	32.21				15.20				
		Local Channel - Dedicated - 2-Wire Voice Grade Rev Bat per month			ULDVX	ULDR2	18.32	187.51	32.21				15.20				
		Local Channel - Dedicated - 4-Wire Voice Grade per month			UNDVX	ULDV4	19.41	187.94	32.63				15.20				
		Local Channel - Dedicated - DS1 per month - Zone 1		1	ULDD1	ULDF1	39.18	172.34	149.27				15.20				
		Local Channel - Dedicated - DS1 per month - Zone 2		2	ULDD1	ULDF1	121.58	172.34	149.27				15.20				
		Local Channel - Dedicated - DS1 per month - Zone 3		3	ULDD1	ULDF1	70.02	172.34	149.27				15.20				
		Local Channel - Dedicated - DS3 - Per Mile per month			ULDD3	1L5NC	7.82										
		Local Channel - Dedicated - DS3 - Facility Termination per month			ULDD3	ULDF3	469.44	438.46	256.30				15.20				
		Local Channel - Dedicated - STS-1- Per Mile per month			ULDS1	1L5NC	7.82										
		Local Channel - Dedicated - STS-1 - Facility Termination per month			ULDS1	ULDFS	457.22	438.46	256.30				15.20				
MULTIPLEXERS																	
		Channelization - DS1 to DS0 Channel System			UXTD1	MQ1	105.09	88.41	60.76				15.20				
		OCU-DP COCI (data) - DS1 to DS0 Channel System - per month (2.4-64kbs)			UDL	1D1DD	1.38	6.39	4.58				15.20				
		2-wire ISDN COCI (BRITE) - DS1 to DS0 Channel Systsem - per month			UDN	UC1CA	2.96	6.39	4.58				15.20				
		Voice Grade COCI - DS1 to DS0 Channel System - per month			UEA	1D1VG	0.6497	6.39	4.58				15.20				
		DS3 to DS1 Channel System per month			UXTD3	MQ3	201.48	172.99	91.25				15.20				
		STS1 to DS1 Channel System per month			UXTS1	MQ3	201.48	172.99	91.25				15.20				
		DS3 Interface Unit (DS1 COCI) used with Loop per month			USL	UC1D1	11.78	6.39	4.58				15.20				
		DS3 Interface Unit (DS1 COCI) used with Local Channel per month			ULDD1	UC1D1	11.78	6.39	4.58								
		DS3 Interface Unit (DS1 COCI) used with Interoffice Channel per month			U1TD1	UC1D1	11.78	6.39	4.58								
DARK FIBER																	
		Dark Fiber, Four Fiber Strands, Per Route Mile or Fraction Thereof per month - Local Channel			UDF	1L5DC	52.23										
		NRC Dark Fiber - Local Channel			UDF	UDFC4		620.60	133.88				15.20				
		Dark Fiber, Four Fiber Strands, Per Route Mile or Fraction Thereof per month - Interoffice Channel			UDF	1L5DF	25.28										
		NRC Dark Fiber - Interoffice Channel			UDF	UDF14		620.60	133.88				15.20				

UNBUNDLED NETWORK ELEMENTS - Louisiana														Attachment: 2		Exhibit: B	
CATEGORY		RATE ELEMENTS	Interim	Zone	BCS	USOC	RATES($)					Svc Order Submitted Elec per LSR	Svc Order Submitted Manually per LSR	Incremental Charge - Manual Svc Order vs. Electronic-1st	Incremental Charge - Manual Svc Order vs. Electronic-Add'l	Incremental Charge - Manual Svc Order vs. Electronic-Disc 1st	Incremental Charge - Manual Svc Order vs. Electronic-Disc Add'l
							Rec	Nonrecurring		Nonrecurring Disconnect		OSS Rates($)					
								First	Add'l	First	Add'l	SOMEC	SOMAN	SOMAN	SOMAN	SOMAN	SOMAN
		Dark Fiber, Four Fiber Strands, Per Route Mile or Fraction Thereof per month - Local Loop			UDF	1L5DL	52.23										
		NRC Dark Fiber - Local Loop			UDF	UDFL4		620.60	133.88				15.20				
TRANSPORT OTHER																	
	Optional Features & Functions:																
8XX ACCESS TEN DIGIT SCREENING																	
		8XX Access Ten Digit Screening, Per Call			OHD		0.0006387										
		8XX Access Ten Digit Screening, Reservation Charge Per 8XX Number Reserved			OHD	N8R1X		2.51	0.43				15.20				
		8XX Access Ten Digit Screening, Per 8XX No. Established W/O POTS Translations			OHD			5.77	0.78				15.20				
		8XX Access Ten Digit Screening, Per 8XX No. Established With POTS Translations			OHD	N8FTX		5.77	0.78				15.20				
		8XX Access Ten Digit Screening, Customized Area of Service Per 8XX Number			OHD	N8FCX		2.51	1.26				15.20				
		8XX Access Ten Digit Screening, Multiple InterLATA CXR Routing Per CXR Requested Per 8XX No.			OHD	N8FMX		2.93	1.68				15.20				
		8XX Access Ten Digit Screening, Change Charge Per Request			OHD	N8FAX		2.93	0.43				15.20				
		8XX Access Ten Digit Screening, Call Handling and Destination Features			OHD	N8FDX		2.51					15.20				
		8XX Access Ten Digit Screening, w/ 8XX No. Delivery, per query			OHD		0.0006387										
		8XX Access Ten Digit Screening, w/ POTS No. Delivery, per query			OHD		0.0006387										
LINE INFORMATION DATA BASE ACCESS (LIDB)																	
		LIDB Common Transport Per Query			OQT		0.0000221										
		LIDB Validation Per Query			OQU		0.0135077										
		LIDB Originating Point Code Establishment or Change			OQT, OQU	NRPBX		33.33					15.20				
SIGNALING (CCS7)																	
		CCS7 Signaling Termination, Per STP Port			UDB	PT8SX	147.60										
		CCS7 Signaling Usage, Per TCAP Message			UDB		0.000064										
		CCS7 Signaling Connection, Per link (A link)			UDB	TPP++	15.77	34.50					15.20				
		CCS7 Signaling Connection, Per link (B link) (also known as D link)			UDB	TPP++	15.77	34.50	34.50				15.20				
		CCS7 Signaling Usage, Per ISUP Message			UDB		0.000016										
		CCS7 Signaling Usage Surrogate, per link per LATA			UDB	STU56	732.10										
		CCS7 Signaling Point Code, per Originating Point Code Establishment or Change, per STP affected			UDB	CCAPO		28.17	28.17				15.20				
		CCS7 Signaling Point Code, per Destination Point Code Establishment or Change, Per Stp Affected			UDB	CCAPD		28.17	28.17				15.20				
E911 SERVICE																	
		Local Channel - Dedicated - 2-wr Voice Grade - Zone 1					18.32	187.51	32.21				15.20				
		Local Channel - Dedicated - 2-wr Voice Grade - Zone 2					18.32	187.51	32.21				15.20				
		Local Channel - Dedicated - 2-wr Voice Grade - Zone 3					18.32	187.51	32.21				15.20				
		Interoffice Transport - Dedicated - 2-wr Voice Grade Per Mile					0.013										
		Interoffice Transport - Dedicated - 2-wr Voice Grade Per Facility Termination					22.60	39.36	26.62				15.20				
		Local Channel - Dedicated - DS1 - Zone 1					39.18	172.34	149.27				15.20				
		Local Channel - Dedicated - DS1 - Zone 2					121.58	172.34	149.27				15.20				
		Local Channel - Dedicated - DS1 - Zone 3					70.02	172.34	149.27				15.20				
		Interoffice Transport - Dedicated - DS1 Per Mile					0.2652										
		Interoffice Transport - Dedicated - DS1 Per Facility Termination					70.47	86.69	79.44				15.20				
CALLING NAME (CNAM) SERVICE																	
		CNAM for DB Owners, Per Query			OQV		0.0010217										
		CNAM for Non DB Owners, Per Query			OQV		0.0010217										
		CNAM For DB Owners - Service Establishment			OQV			22.29					15.20				
		CNAM For Non DB Owners - Service Establishment			OQV			22.29					15.20				

UNBUNDLED NETWORK ELEMENTS - Louisiana													Attachment: 2		Exhibit: B	
CATEGORY	RATE ELEMENTS	Interim	Zone	BCS	USOC	RATES($)					Svc Order Submitted Elec per LSR	Svc Order Submitted Manually per LSR	Incremental Charge - Manual Svc Order vs. Electronic-1st	Incremental Charge - Manual Svc Order vs. Electronic-Add'l	Incremental Charge - Manual Svc Order vs. Electronic-Disc 1st	Incremental Charge - Manual Svc Order vs. Electronic-Disc Add'l
						Rec	Nonrecurring		Nonrecurring Disconnect		OSS Rates($)					
							First	Add'l	First	Add'l	SOMEC	SOMAN	SOMAN	SOMAN	SOMAN	SOMAN
	CNAM For DB Owners - Service Provisioning With Point Code Establishment			OQV			962.22	711.64				15.20				
	CNAM For Non DB Owners - Service Provisioning With Point Code Establishment			OQV			332.43	238.05				15.20				
LNP Query Service																
	LNP Charge Per query			OQV		0.0008559										
	LNP Service Establishment Manual						12.16					15.20				
	LNP Service Provisioning with Point Code Establishment						576.33	294.43				15.20				
OPERATOR CALL PROCESSING																
	Oper. Call Processing - Oper. Provided, Per Min. - Using BST LIDB					1.20										
	Oper. Call Processing - Oper. Provided, Per Min. - Using Foreign LIDB					1.24										
	Oper. Call Processing - Fully Automated, per Call - Using BST LIDB					0.20										
	Oper. Call Processing - Fully Automated, per Call - Using Foreign LIDB					0.20										
INWARD OPERATOR SERVICES																
	Inward Operator Services - Verification, Per Minute					1.15										
	Inward Operator Services - Verification and Emergency Interrupt - Per Minute					1.15										
BRANDING - OPERATOR CALL PROCESSING																
	Recording of Custom Branded OA Announcement				CBAOS		7,000.00	7,000.00				15.20				
	Loading of Custom Branded OA Announcement per shelf/NAV				CBAOL		500.00	500.00				15.20				
Unbranding via OLNS for UNEP CLEC																
	Loading of OA per OCN (Regional)						1,200.00	1,200.00				15.20				
DIRECTORY ASSISTANCE SERVICES																
DIRECTORY ASSISTANCE ACCESS SERVICE																
	Directory Assistance Access Service Calls, Charge Per Call					0.275										
DIRECTORY ASSISTANCE CALL COMPLETION ACCESS SERVICE (DACC)																
	Directory Assistance Call Completion Access Service (DACC), Per Call Attempt					0.10										
DIRECTORY TRANSPORT																
DIRECTORY ASSISTANCE SERVICES																
DIRECTORY ASSISTANCE DATA BASE SERVICE (DADS)																
	Directory Assistance Data Base Service Charge Per Listing					0.04										
	Directory Assistance Data Base Service, per month				DBSOF	150.00										
BRANDING - DIRECTORY ASSISTANCE																
Facility Based CLEC																
	Recording and Provisioning of DA Custom Branded Announcement			AMT	CBADA		6,000.00	6,000.00								
	Loading of Custom Branded Announcement per DRAM Card/Switch			AMT	CBADC		1,170.00	1,170.00								
UNEP CLEC																
	Recording of DA Custom Branded Announcement						3,000.00	3,000.00								
	Loading of DA Custom Branded Announcement per DRAM Card/Switch per OCN						1,170.00	1,170.00								
Unbranding via OLNS for UNEP CLEC																
	Loading of DA per OCN (1 OCN per Order)						420.00	420.00								
	Loading of DA per Switch per OCN						16.00	16.00								
SELECTIVE ROUTING																
	Selective Routing Per Unique Line Class Code Per Request Per Switch				USRCR		82.25	82.25				15.20				
VIRTUAL COLLOCATION																
	Virtual Collocation - Application Cost			AMTFS	EAF		1,770.40									
	Virtual Collocation - Cable Installation Cost, per cable			AMTFS	ESPCX		841.54									
	Virtual Collocation - Floor Space, per sq. ft.			AMTFS	ESPVX	3.20										
	Virtual Collocation - Power, per breaker amp			AMTFS	ESPAX	8.32										

UNBUNDLED NETWORK ELEMENTS - Louisiana														Attachment: 2		Exhibit: B	
CATEGORY		RATE ELEMENTS	Interim	Zone	BCS	USOC	RATES($)					Svc Order Submitted Elec per LSR	Svc Order Submitted Manually per LSR	Incremental Charge - Manual Svc Order vs. Electronic-1st	Incremental Charge - Manual Svc Order vs. Electronic-Add'l	Incremental Charge - Manual Svc Order vs. Electronic-Disc 1st	Incremental Charge - Manual Svc Order vs. Electronic-Disc Add'l
							Rec	Nonrecurring		Nonrecurring Disconnect		OSS Rates($)					
								First	Add'l	First	Add'l	SOMEC	SOMAN	SOMAN	SOMAN	SOMAN	SOMAN
		Virtual Collocation - Cable Support Structure, per entrance cable			AMTFS	ESPSX	16.02										
		Virtual Collocation - 2-wire Cross Connects (loop)			UEANL,UEA,UDN,UDC,UAL,UHL,UCL,UEQ, AMTFS, UDL, UNCVX, UNCDX, UNCNX	UEAC2	0.0296	11.94	11.46				15.20				
		Virtual Collocation - 4-wire Cross Connects (loop)			UEA,UHL,UCL,UDL, AMTFS, UAL, UDN, UNCVX, UNCDX	UEAC4	0.0591	12.04	11.53				15.20				
		Virtual Collocation - 2-Fiber Cross Connects			AMTFS,UDL12, UDLO3, U1T48, U1T12, U1T03, ULDO3, ULD12, ULD48, UDF	CNC2F	2.65	20.29	14.76				15.20				
		Virtual Collocation - 4-Fiber Cross Connects			AMTFS,UDL12, UDLO3, U1T48, U1T12, U1T03, ULDO3, ULD12, ULD48, UDF	CNC4F	5.31	24.81	19.29				15.20				
		Virtual collocation - DS1 Cross Connects			USL,ULC,AMTFS, ULR, UXTD1, UNC1X, ULDD1, U1TD1, USLEL, UNLD1	CNC1X	1.04	21.39	15.47				15.20				
		Virtual collocation - DS3 Cross Connects			USL,ULC,AMTFS,UE3, U1TD3, UXTS1, UXTD3, UNC3X, UNCSX, ULDD3, U1TS1, ULDS1, UDLSX, UNLD3	CND3X	13.21	20.28	14.76				15.20				
		Virtual Collocation - Co-Carrier Cross Connects - Fiber Cable Support Structure, per linear foot			AMTFS	VE1CB	0.0024										
		Virtual Collocation - Co-Carrier Cross Connects - Copper/Coax Cable Support Structure, per linear ft			AMTFS	VE1CD	0.0036										
		Virtual Collocation - Co-Carrier Cross Connects - Fiber Cable Support Structure,per cable			AMTFS	VE1CC		534.79									
		Virtual Collocation - Co-Carrier Cross Connects - Copper/Coax Cable Support Structure, per cable			AMTFS	VE1CE		534.79									
		Virtual collocation - Security Escort - Basic, per half hour			AMTFS	SPTBX		16.44	10.42								
		Virtual collocation - Security Escort - Overtime, per half hour			AMTFS	SPTOX		21.41	13.45								
		Virtual collocation - Security Escort - Premium, per half hour			AMTFS	SPTPX		26.38	16.49								
		Virtual collocation - Maintenance in CO - Basic, per half hour			AMTFS	CTRLX		27.12	10.42								
		Virtual collocation - Maintenance in CO - Overtime, per half hour			AMTFS	SPTOM		35.42	13.45								
		Virtual collocation - Maintenance in CO - Premium per half hour			AMTFS	SPTPM		43.72	16.49								
VIRTUAL COLLOCATION																	
		Virtual Collocation - 2-wire Cross Connect, Exchange Port 2-Wire Analog - Res			UEPSR	VE1R2	0.0296	11.94	11.46				15.20				
		Virtual Collocation 2-Wire Cross Connect, Exchange Port 2-Wire Line Side PBX Trunk - Bus			UEPSP	VE1R2	0.0296	11.94	11.46				15.20				
		Virtual Collocation 2-Wire Cross Connect, Exchange Port 2-Wire Voice Grade PBX Trunk - Res			UEPSE	VE1R2	0.0296	11.94	11.46				15.20				
		Virtual Collocation 2-Wire Cross Connect, Exchange Port 2-Wire Analog Bus			UEPSB	VE1R2	0.0296	11.94	11.46				15.20				
		Virtual Collocation 2-Wire Cross Connect, Exchnage Port 2-Wire ISDN			UEPSX	VE1R2	0.0296	11.94	11.46				15.20				

CATEGORY	RATE ELEMENTS	Interim	Zone	BCS	USOC	RATES($) Rec	Nonrecurring First	Nonrecurring Add'l	Nonrecurring Disconnect First	Nonrecurring Disconnect Add'l	Svc Order Submitted Elec per LSR	Svc Order Submitted Manually per LSR	Incremental Charge - Manual Svc Order vs. Electronic-1st	Incremental Charge - Manual Svc Order vs. Electronic-Add'l	Incremental Charge - Manual Svc Order vs. Electronic-Disc 1st	Incremental Charge - Manual Svc Order vs. Electronic-Disc Add'l
											OSS Rates($)					
											SOMEC	SOMAN	SOMAN	SOMAN	SOMAN	SOMAN
	Virtual Collocation 2-Wire Cross Connect, Exchange Port 2-Wire ISDN			UEPTX	VE1R2	0.0296	11.94	11.46				15.20				
	Virtual Collocation 4-Wire Cross Connect, Exchange Port 4-Wire ISDN DS1			UEPEX	VE1R4	0.0591	12.04	11.53				15.20				
VIRTUAL COLLOCATION																
	Virtual Collocation-2 Wire Cross Connects (Loop) for Line Splitting			UEPSR, UEPSB	VE1LS	0.0296	11.94	11.46	0.00	0.00		15.20				
AIN SELECTIVE CARRIER ROUTING																
	Regional Service Establishment			UEBIB	SRCEC		100,209.33					15.20				
	End Office Establishment			UEBIB	SRCEO		164.29	164.29				15.20				
	Query NRC, per query			UEBIB		0.0030293										
AIN - BELLSOUTH AIN SMS ACCESS SERVICE																
	AIN SMS Access Service - Service Establishment, Per State, Initial Setup			A1N	CAMSE		38.30	38.30				15.20				
	AIN SMS Access Service - Port Connection - Dial/Shared Access			A1N	CAMDP		7.60	7.60				15.20				
	AIN SMS Access Service - Port Connection - ISDN Access			A1N	CAM1P		7.60	7.60				15.20				
	AIN SMS Access Service - User Identification Codes - Per User ID Code			A1N	CAMAU		33.99	33.99				15.20				
	AIN SMS Access Service - Security Card, Per User ID Code, Initial or Replacement			A1N	CAMRC		41.39	41.39				15.20				
	AIN SMS Access Service - Storage, Per Unit (100 Kilobytes)					0.0022										
	AIN SMS Access Service - Session, Per Minute					0.5795										
	AIN SMS Access Service - Company Performed Session, Per Minute					0.8104										
AIN - BELLSOUTH AIN TOOLKIT SERVICE																
	AIN Toolkit Service - Service Establishment Charge, Per State, Initial Setup			CAM	BAPSC		38.30	38.30				15.20				
	AIN Toolkit Service - Training Session, Per Customer				BAPVX		4,175.10	4,175.10				15.20				
	AIN Toolkit Service - Trigger Access Charge, Per Trigger, Per DN, Term. Attempt				BAPTT		7.60	7.60				15.20				
	AIN Toolkit Service - Trigger Access Charge, Per Trigger, Per DN, Off-Hook Delay				BAPTD		7.60	7.60				15.20				
	AIN Toolkit Service - Trigger Access Charge, Per Trigger, Per DN, Off-Hook Immediate				BAPTM		7.60	7.60				15.20				
	AIN Toolkit Service - Trigger Access Charge, Per Trigger, Per DN, 10-Digit PODP				BAPTO		33.47	33.47				15.20				
	AIN Toolkit Service - Trigger Access Charge, Per Trigger, Per DN, CDP				BAPTC		33.47	33.47				15.20				
	AIN Toolkit Service - Trigger Access Charge, Per Trigger, Per DN, Feature Code				BAPTF		33.47	33.47				15.20				
	AIN Toolkit Service - Query Charge, Per Query					0.0536446										
	AIN Toolkit Service - Type 1 Node Charge, Per AIN Toolkit Subscription, Per Node, Per Query					0.006569										
	AIN Toolkit Service - SCP Storage Charge, Per SMS Access Account, Per 100 Kilobytes					0.06										
	AIN Toolkit Service - Monthly report - Per AIN Toolkit Service Subscription			CAM	BAPMS	10.90	7.60	7.60				15.20				
	AIN Toolkit Service - Special Study - Per AIN Toolkit Service Subscription			CAM	BAPLS	2.80	8.41	8.41				15.20				
	AIN Toolkit Service - Call Event Report - Per AIN Toolkit Service Subscription			CAM	BAPDS	8.20	7.60	7.60				15.20				
	AIN Toolkit Service - Call Event Special Study - Per AIN Toolkit Service Subscription			CAM	BAPES	0.09	8.41	8.41				15.20				
ENHANCED EXTENDED LINK (EELs)																
	NOTE: New EELs available in GA, TN, KY, LA, MS, & SC and density zone 1 of following MSAs: Orlando, FL; Miami, FL; Ft. Lauderdale, FL;															
	NOTE: Charlotte-Gastonia-Rockhill, NC; Greensboro-Winston Salem-High Point, NC. Use all rates below except Switch As Is Charge.															
	NOTE: In all states, EEL network elements shown below also apply to currently combined facilities which are converted to UNE rates. A Switch As Is Charge applies to currently combined facilities converted to UNEs.(Non-recurring rates do not apply.)															
	NOTE: In GA, TN, KY, LA, MS & SC the EEL network elements apply to ordinarily combined network elements.(No Switch As Is Charge.)															

CATEGORY	RATE ELEMENTS	Interim	Zone	BCS	USOC	RATES($) Rec	Nonrecurring First	Nonrecurring Add'l	Nonrecurring Disconnect First	Nonrecurring Disconnect Add'l	Svc Order Submitted Elec per LSR	Svc Order Submitted Manually per LSR	Incremental Charge - Manual Svc Order vs. Electronic-1st	Incremental Charge - Manual Svc Order vs. Electronic-Add'l	Incremental Charge - Manual Svc Order vs. Electronic-Disc 1st	Incremental Charge - Manual Svc Order vs. Electronic-Disc Add'l
											OSS Rates($)					
											SOMEC	SOMAN	SOMAN	SOMAN	SOMAN	SOMAN
2-WIRE VOICE GRADE EXTENDED LOOP WITH DEDICATED DS1 INTEROFFICE TRANSPORT (EEL)																
	First 2-Wire VG Loop(SL2) in a DS1 Interofficed Transport Combination - Zone 1		1	UNCVX	UEAL2	14.93	94.21	45.09				15.20				
	First 2-Wire VG Grade Loop(SL2) in a DS1 Interofficed Transport Combination - Zone 2		2	UNCVX	UEAL2	25.35	94.21	45.09				15.20				
	First 2-Wire VG Grade Loop(SL2) in a DS1 Interofficed Transport Combination - Zone 3		3	UNCVX	UEAL2	50.46	94.21	45.09				15.20				
	Interoffice Transport - Dedicated - DS1 combination - Per Mile per month			UNC1X	1L5XX	0.2652										
	Interoffice Transport - Dedicated - DS1 combination - Facility Termination per month			UNC1X	U1TF1	70.47	143.58	103.88				15.20				
	DS1 Channelization System Per Month			UNC1X	MQ1	105.09	59.97	12.96				15.20				
	Voice Grade COCI - DS1 To Ds0 Interface - Per Month			UNCVX	1D1VG	0.6497	5.91	4.26								
	Each Additional 2-Wire VG Loop(SL 2) in the same DS1 Interoffice Transport Combination - Zone 1		1	UNCVX	UEAL2	14.93	94.21	45.09				15.20				
	Each Additional 2-Wire VG Loop(SL2) in the same DS1 Interoffice Transport Combination - Zone 2		2	UNCVX	UEAL2	25.35	94.21	45.09				15.20				
	Each Additional 2-Wire VG Loop(SL2) in the same DS1 Interoffice Transport Combination - Zone 3		3	UNCVX	UEAL2	50.46	94.21	45.09				15.20				
	Voice Grade COCI - DS1 to DS0 Channel System combination - per month			UNCVX	1D1VG	0.6497	5.91	4.26								
	Nonrecurring Currently Combined Network Elements Switch -As-Is Charge			UNC1X	UNCCC		5.43	5.43				15.20				
4-WIRE VOICE GRADE EXTENDED LOOP WITH DEDICATED DS1 INTEROFFICE TRANSPORT (EEL)																
	First 4-Wire Analog Voice Grade Loop in a DS1 Interoffice Transport Combination - Zone 1		1	UNCVX	UEAL4	30.81	94.21	45.09				15.20				
	First 4-Wire Analog Voice Grade Loop in a DS1 Interoffice Transport Combination - Zone 2		2	UNCVX	UEAL4	38.32	94.21	45.09				15.20				
	First 4-Wire Analog Voice Grade Loop in a DS1 Interoffice Transport Combination - Zone 3		3	UNCVX	UEAL4	60.39	94.21	45.09				15.20				
	Interoffice Transport - Dedicated - DS1 combination - Per Mile Per Month			UNC1X	1L5XX	0.2652										
	Interoffice Transport - Dedicated - DS1 - Facility Termination Per Month			UNC1X	U1TF1	70.47	143.58	103.88				15.20				
	Channelization - Channel System DS1 to DS0 combination Per Month			UNC1X	MQ1	105.09	59.97	12.96								
	Voice Grade COCI - DS1 to DS0 Channel System combination - per month			UNCVX	1D1VG	0.6497	5.91	4.26								
	Additional 4-Wire Analog Voice Grade Loop in same DS1 Interoffice Transport Combination - Zone 1		1	UNCVX	UEAL4	30.81	94.21	45.09				15.20				
	Additional 4-Wire Analog Voice Grade Loop in same DS1 Interoffice Transport Combination - Zone 2		2	UNCVX	UEAL4	38.32	94.21	45.09				15.20				
	Additional 4-Wire Analog Voice Grade Loop in same DS1 Interoffice Transport Combination - Zone 3		3	UNCVX	UEAL4	60.39	94.21	45.09				15.20				
	Voice Grade COCI - DS1 to DS0 Channel System combination - per month			UNCVX	1D1VG	0.6497	5.91	4.26								
	Nonrecurring Currently Combined Network Elements Switch -As-Is Charge			UNC1X	UNCCC		5.43	5.43				15.20				
4-WIRE 56 KBPS EXTENDED DIGITAL LOOP WITH DEDICATED DS1 INTEROFFICE TRANSPORT (EEL)																
	First 4-Wire 56Kbps Digital Grade Loop in a DS1 Interoffice Transport Combination - Zone 1		1	UNCDX	UDL56	30.99	94.21	45.09				15.20				
	First 4-wire 56Kbps Digital Grade Loop in a DS1 Interoffice Transport Combination - Zone 2		2	UNCDX	UDL56	36.78	94.21	45.09				15.20				
	First 4-Wire 56Kbps Digital Grade Loop in a DS1 Interoffice Transport Combination - Zone 3		3	UNCDX	UDL56	38.92	94.21	45.09				15.20				
	Interoffice Transport - Dedicated - DS1 combination - Per Mile Per Month			UNC1X	1L5XX	0.2652										
	Interoffice Transport - Dedicated - DS1 - combination Facility Termination Per Month			UNC1X	U1TF1	70.47	143.58	103.88				15.20				

CATEGORY		RATE ELEMENTS	Interim	Zone	BCS	USOC	RATES($)					Svc Order Submitted Elec per LSR	Svc Order Submitted Manually per LSR	Incremental Charge - Manual Svc Order vs. Electronic-1st	Incremental Charge - Manual Svc Order vs. Electronic-Add'l	Incremental Charge - Manual Svc Order vs. Electronic-Disc 1st	Incremental Charge - Manual Svc Order vs. Electronic-Disc Add'l
							Rec	Nonrecurring		Nonrecurring Disconnect		OSS Rates($)					
								First	Add'l	First	Add'l	SOMEC	SOMAN	SOMAN	SOMAN	SOMAN	SOMAN
		Channelization - Channel System DS1 to DS0 combination Per Month			UNC1X	MQ1	105.09	59.97	12.96								
		OCU-DP COCI (data) - DS1 to DS0 Channel System - per month (2.4-64kbs)			UNCDX	1D1DD	1.38	5.91	4.26								
		Additional 4-Wire 56Kbps Digital Grade Loopin same DS1 Interoffice Transport Combination - Zone 1		1	UNCDX	UDL56	30.99	94.21	45.09				15.20				
		Additional 4-Wire 56Kbps Digital Grade Loopin same DS1 Interoffice Transport Combination - Zone 2		2	UNCDX	UDL56	36.78	94.21	45.09				15.20				
		Additional 4-Wire 56Kbps Digital Grade Loopin same DS1 Interoffice Transport Combination - Zone 3		3	UNCDX	UDL56	38.92	94.21	45.09				15.20				
		OCU-DP COCI (data) - DS1 to DS0 Channel System - combination per month (2.4-64kbs)			UNCDX	1D1DD	1.38	5.91	4.26								
		Nonrecurring Currently Combined Network Elements Switch -As-Is Charge			UNC1X	UNCCC		5.43	5.43				15.20				
	4-WIRE 64 KBPS EXTENDED DIGITAL LOOP WITH DEDICATED DS1 INTEROFFICE TRANSPORT (EEL)																
		First 4-Wire 64Kbps Digital Grade Loop in a DS1 Interoffice Transport Combination - Zone 1		1	UNCDX	UDL64	30.99	94.21	45.09				15.20				
		First 4-Wire 64Kbps Digital Grade Loop in a DS1 Interoffice Transport Combination - Zone 2		2	UNCDX	UDL64	36.78	94.21	45.09				15.20				
		First 4-Wire 64Kbps Digital Grade Loop in a DS1 Interoffice Transport Combination - Zone 3		3	UNCDX	UDL64	38.92	94.21	45.09				15.20				
		Interoffice Transport - Dedicated - DS1 combination - Per Mile Per Month			UNC1X	1L5XX	0.2652										
		Interoffice Transport - Dedicated - DS1 combination - Facility Termination Per Month			UNC1X	U1TF1	70.47	143.58	103.88				15.20				
		Channelization - Channel System DS1 to DS0 combination Per Month			UNC1X	MQ1	105.09	59.97	12.96								
		OCU-DP COCI (data) - DS1 to DS0 Channel System combination - per month (2.4-64kbs)			UNCDX	1D1DD	1.38	5.91	4.26								
		Additional 4-Wire 64Kbps Digital Grade Loopin same DS1 Interoffice Transport Combination - Zone 1		1	UNCDX	UDL64	30.99	94.21	45.09				15.20				
		Additional 4-Wire 64Kbps Digital Grade Loopin same DS1 Interoffice Transport Combination - Zone 2		2	UNCDX	UDL64	36.78	94.21	45.09				15.20				
		Additional 4-Wire 64Kbps Digital Grade Loopin same DS1 Interoffice Transport Combination - Zone 3		3	UNCDX	UDL64	38.92	94.21	45.09				15.20				
		OCU-DP COCI (data) - DS1 to DS0 Channel System combination - per month (2.4-64kbs)			UNCDX	1D1DD	1.38	5.91	4.26								
		Nonrecurring Currently Combined Network Elements Switch -As-Is Charge			UNC1X	UNCCC		5.43	5.43				15.20				
	4-WIRE DS1 DIGITAL EXTENDED LOOP WITH DEDICATED DS1 INTEROFFICE TRANSPORT (EEL)																
		4-Wire DS1 Digital Loop in Combination with DS1 Interoffice Transport - Zone 1		1	UNC1X	USLXX	85.70	169.22	100.89				15.20				
		4-Wire DS1 Digital Loop in Combination with DS1 Interoffice Transport - Zone 2		2	UNC1X	USLXX	194.96	169.22	100.89				15.20				
		4-Wire DS1 Digital Loop in Combination with DS1 Interoffice Transport - Zone 3		3	UNC1X	USLXX	491.94	169.22	100.89				15.20				
		Interoffice Transport - Dedicated - DS1 combination - Per Mile Per Month			UNC1X	1L5XX	0.2652										
		Interoffice Transport - Dedicated - DS1 combination - Facility Termination Per Month			UNC1X	U1TF1	70.47	143.58	103.88				15.20				
		Nonrecurring Currently Combined Network Elements Switch -As-Is Charge			UNC1X	UNCCC		5.43	5.43				15.20				
	4-WIRE DS1 DIGITAL EXTENDED LOOP WITH DEDICATED DS3 INTEROFFICE TRANSPORT (EEL)																
		First DS1Loop in DS3 Interoffice Transport Combination - Zone 1		1	UNC1X	USLXX	85.70	169.22	100.89				15.20				
		First DS1Loop in DS3 Interoffice Transport Combination - Zone 2		2	UNC1X	USLXX	194.96	169.22	100.89				15.20				
		First DS1Loop in DS3 Interoffice Transport Combination - Zone 3		3	UNC1X	USLXX	491.94	169.22	100.89				15.20				

CATEGORY	RATE ELEMENTS	Interim	Zone	BCS	USOC	RATES($) Rec	Nonrecurring First	Nonrecurring Add'l	Nonrecurring Disconnect First	Nonrecurring Disconnect Add'l	Svc Order Submitted Elec per LSR	Svc Order Submitted Manually per LSR	Incremental Charge - Manual Svc Order vs. Electronic-1st	Incremental Charge - Manual Svc Order vs. Electronic-Add'l	Incremental Charge - Manual Svc Order vs. Electronic-Disc 1st	Incremental Charge - Manual Svc Order vs. Electronic-Disc Add'l
											OSS Rates($)					
											SOMEC	SOMAN	SOMAN	SOMAN	SOMAN	SOMAN
	Interoffice Transport - Dedicated - DS3 combination - Per Mile Per Month			UNC3X	1L5XX	6.04										
	Interoffice Transport - Dedicated - DS3 - Facility Termination per month			UNC3X	U1TF3	850.45	296.68	121.16				15.20				
	DS3 to DS1 Channel System combination per month			UNC3X	MQ3	201.48	107.05	48.07								
	DS3 Interface Unit (DS1 COCI) combination per month			UNC1X	UC1D1	11.78	5.91	4.26								
	Additional DS1Loop in DS3 Interoffice Transport Combination - Zone 1		1	UNC1X	USLXX	85.70	169.22	100.89				15.20				
	Additional DS1Loop in DS3 Interoffice Transport Combination - Zone 2		2	UNC1X	USLXX	194.96	169.22	100.89				15.20				
	Additional DS1Loop in DS3 Interoffice Transport Combination - Zone 3		3	UNC1X	USLXX	491.94	169.22	100.89				15.20				
	DS3 Interface Unit (DS1 COCI) combination per month			UNC1X	UC1D1	11.78	5.91	4.26								
	Nonrecurring Currently Combined Network Elements Switch -As-Is Charge			UNC3X	UNCCC		5.43	5.43				15.20				
	2-WIRE VOICE GRADE EXTENDED LOOP/ 2 WIRE VOICE GRADE INTEROFFICE TRANSPORT (EEL)															
	2-WireVG Loop used with 2-wire VG Interoffice Transport Combination - Zone 1		1	UNCVX	UEAL2	14.93	94.21	45.09				15.20				
	2-WireVG Loop used with 2-wire VG Interoffice Transport Combination - Zone 2		2	UNCVX	UEAL2	25.35	94.21	45.09				15.20				
	2-WireVG Loop used with 2-wire VG Interoffice Transport Combination - Zone 3		3	UNCVX	UEAL2	50.46	94.21	45.09				15.20				
	Interoffice Transport - Dedicated - 2-wire VG combination - Per Mile Per Month			UNCVX	1L5XX	0.013										
	Interoffice Transport - Dedicated - 2- Wire Voice Grade combination - Facility Termination per month			UNCVX	U1TV2	22.60	72.60	41.75				15.20				
	Nonrecurring Currently Combined Network Elements Switch -As-Is Charge			UNCVX	UNCCC		5.43	5.43				15.20				
	4-WIRE VOICE GRADE EXTENDED LOOP/ 4 WIRE VOICE GRADE INTEROFFICE TRANSPORT (EEL)															
	4-WireVG Loop used with 4-wire VG Interoffice Transport Combination - Zone 1		1	UNCVX	UEAL4	30.81	94.21	45.09				15.20				
	4-WireVG Loop used with 4-wire VG Interoffice Transport Combination - Zone 2		2	UNCVX	UEAL4	38.32	94.21	45.09				15.20				
	4-WireVG Loop used with 4-wire VG Interoffice Transport Combination - Zone 3		3	UNCVX	UEAL4	60.39	94.21	45.09				15.20				
	Interoffice Transport - Dedicated - 4-wire VG combination - Per Mile Per Month			UNCVX	1L5XX	0.013										
	Interoffice Transport - Dedicated - 4- Wire Voice Grade combination - Facility Termination per month			UNCVX	U1TV4	19.81	72.60	41.75				15.20				
	Nonrecurring Currently Combined Network Elements Switch -As-Is Charge			UNCVX	UNCCC		5.43	5.43				15.20				
	DS3 DIGITAL EXTENDED LOOP WITH DEDICATED DS3 INTEROFFICE TRANSPORT (EEL)															
	High Capacity Unbundled Local Loop - DS3 combination - Per Mile per month			UNC3X	1L5ND	10.04										
	High Capacity Unbundled Local Loop - DS3 combination - Facility Termination per month			UNC3X	UE3PX	362.34	188.45	125.51								
	Interoffice Transport - Dedicated - DS3 - Per Mile per month			UNC3X	1L5XX	6.04										
	Interoffice Transport - Dedicated - DS3 combination - Facility Termination per per month			UNC3X	U1TF3	850.45	296.68	121.16				15.20				
	Nonrecurring Currently Combined Network Elements Switch -As-Is Charge			UNC3X	UNCCC		5.43	5.43				15.20				
	STS1 DIGITAL EXTENDED LOOP WITH DEDICATED STS1 INTEROFFICE TRANSPORT (EEL)															
	High Capacity Unbundled Local Loop - STS1 combination - Per Mile per month			UNCSX	1L5ND	10.04										
	High Capacity Unbundled Local Loop - STS1 combination - Facility Termination per month			UNCSX	UDLS1	374.56	188.45	125.51								
	Interoffice Transport - Dedicated - STS1 combination - Per Mile per month			UNCSX	1L5XX	6.04										

CATEGORY	RATE ELEMENTS	Interim	Zone	BCS	USOC	RATES($) Rec	Nonrecurring First	Nonrecurring Add'l	Nonrecurring Disconnect First	Nonrecurring Disconnect Add'l	Svc Order Submitted Elec per LSR	Svc Order Submitted Manually per LSR	Incremental Charge - Manual Svc Order vs. Electronic-1st	Incremental Charge - Manual Svc Order vs. Electronic-Add'l	Incremental Charge - Manual Svc Order vs. Electronic-Disc 1st	Incremental Charge - Manual Svc Order vs. Electronic-Disc Add'l
											OSS Rates($)					
											SOMEC	SOMAN	SOMAN	SOMAN	SOMAN	SOMAN
	Interoffice Transport - Dedicated - STS1 combination - Facility Termination per month			UNCSX	U1TFS	830.19	296.68	121.16				15.20				
	Nonrecurring Currently Combined Network Elements Switch -As-Is Charge			UNCSX	UNCCC		5.43	5.43				15.20				
	2-WIRE ISDN EXTENDED LOOP WITH DS1 INTEROFFICE TRANSPORT (EEL)															
	First 2-Wire ISDN Loop in a DS1 Interoffice Combination Transport - Zone 1		1	UNCNX	U1L2X	22.09	94.21	45.09				15.20				
	First 2-Wire ISDN Loop in a DS1 Interoffice Combination Transport - Zone 2		2	UNCNX	U1L2X	35.28	94.21	45.09				15.20				
	First 2-Wire ISDN Loop in a DS1 Interoffice Combination Transport - Zone 3		3	UNCNX	U1L2X	65.18	94.21	45.09				15.20				
	Interoffice Transport - Dedicated - DS1 combination - Per Mile			UNC1X	1L5XX	0.2652										
	Interoffice Transport - Dedicated - DS1 combintion - Facility Termination per month			UNC1X	U1TF1	70.47	143.58	103.88				15.20				
	Channelization - Channel System DS1 to DS0 combination - per month			UNC1X	MQ1	105.09	59.97	12.96								
	2-wire ISDN COCI (BRITE) - DS1 to DS0 Channel System combination - per month			UNCNX	UC1CA	2.96	5.91	4.26								
	Additional 2-wire ISDN Loop in same DS1Interoffice Transport Combination - Zone 1		1	UNCNX	U1L2X	22.09	94.21	45.09				15.20				
	Additional 2-wire ISDN Loop in same DS1Interoffice Transport Combination - Zone 2		2	UNCNX	U1L2X	35.28	94.21	45.09				15.20				
	Additional 2-wire ISDN Loop in same DS1Interoffice Transport Combination - Zone 3		3	UNCNX	U1L2X	65.18	94.21	45.09				15.20				
	2-wire ISDN COCI (BRITE) - DS1 to DS0 Channel System combintaion- per month			UNCNX	UC1CA	2.96	5.91	4.26								
	Nonrecurring Currently Combined Network Elements Switch -As-Is Charge			UNC1X	UNCCC		5.43	5.43				15.20				
	4-WIRE DS1 DIGITAL EXTENDED LOOP WITH DEDICATED STS-1 INTEROFFICE TRANSPORT (EEL)															
	First DS1 Loop in STS1 Interoffice Transport Combination - Zone 1		1	UNC1X	USLXX	85.70	169.22	100.89				15.20				
	First DS1 Loop in STS1 Interoffice Transport Combination - Zone 2		2	UNC1X	USLXX	194.96	169.22	100.89				15.20				
	First DS1 Loop in STS1 Interoffice Transport Combination - Zone 3		3	UNC1X	USLXX	491.94	169.22	100.89				15.20				
	Interoffice Transport - Dedicated - STS1 combination - Per Mile Per Month			UNCSX	1L5XX	6.04										
	Interoffice Transport - Dedicated - STS1 combination - Facility Termination			UNCSX	U1TFS	830.19	296.68	121.16				15.20				
	STS1 to DS1 Channel System conbination per month			UNCSX	MQ3	201.48	107.05	48.07								
	DS3 Interface Unit (DS1 COCI) combination per month			UNC1X	UC1D1	11.78	5.91	4.26								
	Additional DS1Loop in STS1 Interoffice Transport Combination - Zone 1		1	UNC1X	USLXX	85.70	169.22	100.89				15.20				
	Additional DS1Loop in STS1 Interoffice Transport Combination - Zone 2		2	UNC1X	USLXX	194.96	169.22	100.89				15.20				
	Additional DS1Loop in STS1 Interoffice Transport Combination - Zone 3		3	UNC1X	USLXX	491.94	169.22	100.89				15.20				
	DS3 Interface Unit (DS1 COCI) combination per month			UNC1X	UC1D1	11.78	5.91	4.26								
	Nonrecurring Currently Combined Network Elements Switch -As-Is Charge			UNCSX	UNCCC		5.43	5.43				15.20				
	4-WIRE 56 KBPS DIGITAL EXTENDED LOOP WITH 56 KBPS INTEROFFICE TRANSPORT (EEL)															
	4-wire 56 kbps Loop/4-wire 56 kbps Interoffice Transport Combination - Zone 1		1	UNCDX	UDL56	30.99	94.21	45.09				15.20				
	4-wire 56 kbps Loop/4-wire 56 kbps Interoffice Transport Combination - Zone 2		2	UNCDX	UDL56	36.78	94.21	45.09				15.20				
	4-wire 56 kbps Loop/4-wire 56 kbps Interoffice Transport Combination - Zone 3		3	UNCDX	UDL56	38.92	94.21	45.09				15.20				
	Interoffice Transport - Dedicated - 4-wire 56 kbps combination - Per Mile			UNCDX	1L5XX	0.013										

CATEGORY	RATE ELEMENTS	Interim	Zone	BCS	USOC	RATES($) Rec	Nonrecurring First	Nonrecurring Add'l	Nonrecurring Disconnect First	Nonrecurring Disconnect Add'l	Svc Order Submitted Elec per LSR	Svc Order Submitted Manually per LSR	Incremental Charge - Manual Svc Order vs. Electronic-1st	Incremental Charge - Manual Svc Order vs. Electronic-Add'l	Incremental Charge - Manual Svc Order vs. Electronic-Disc 1st	Incremental Charge - Manual Svc Order vs. Electronic-Disc Add'l
											OSS Rates($)					
											SOMEC	SOMAN	SOMAN	SOMAN	SOMAN	SOMAN
	Interoffice Transport - Dedicated - 4-wire 56 kbps combination - Facility Termination			UNCDX	U1TD5	15.61	72.60	41.75				15.20				
	Nonrecurring Currently Combined Network Elements Switch -As-Is Charge			UNCDX	UNCCC		5.43	5.43				15.20				
	4-WIRE 64 KBPS DIGITAL EXTENDED LOOP WITH 64 KBPS INTEROFFICE TRANSPORT (EEL)															
	4-wire 64 kbps Loop/4-wire 64 kbps Interoffice Transport Combination - Zone 1		1	UNCDX	UDL64	30.99	94.21	45.09				15.20				
	4-wire 64 kbps Loop/4-wire 64 kbps Interoffice Transport Combination - Zone 2		2	UNCDX	UDL64	36.78	94.21	45.09				15.20				
	4-wire 64 kbps Loop/4-wire 64 kbps Interoffice Transport Combination - Zone 3		3	UNCDX	UDL64	38.92	94.21	45.09				15.20				
	Interoffice Transport - Dedicated - 4-wire 64 kbps combination - Per Mile			UNCDX	1L5XX	0.013										
	Interoffice Transport - Dedicated - 4-wire 64 kbps combination - Facility Termination			UNCDX	U1TD6	15.61	72.60	41.75				15.20				
	Nonrecurring Currently Combined Network Elements Switch -As-Is Charge			UNCDX	UNCCC		5.43	5.43				15.20				
ADDITIONAL NETWORK ELEMENTS																
	When used as a part of a currently combined facility, the non-recurrng charges do not apply, but a Switch As Is charge does apply.															
	When used as ordinarilty combined network elements in Louisiana, the non-recurring charges apply and the Switch As Is Charge does not.															
	Access to DCS - Customer Reconfiguration (FlexServ)															
	Node (SynchroNet)															
	Nonrecurring Currently Combined Network Elements "Switch As Is" Charge (One applies to each combination)															
	Nonrecurring Currently Combined Network Elements Switch -As-Is Charge - 2 wire/4-Wire VG			UNCVX	UNCCC		5.43	5.43				15.20				
	Nonrecurring Currently Combined Network Elements Switch -As-Is Charge - 56/64 kbps			UNCDX	UNCCC		5.43	5.43				15.20				
	Nonrecurring Currently Combined Network Elements Switch -As-Is Charge - DS1			UNC1X	UNCCC		5.43	5.43				15.20				
	Nonrecurring Currently Combined Network Elements Switch -As-Is Charge - DS3			UNC3X	UNCCC		5.43	5.43				15.20				
	Nonrecurring Currently Combined Network Elements Switch -As-Is Charge - STS1			UNCSX	UNCCC		5.43	5.43				15.20				
	NOTE: Local Channel - Dedicated Transport - minimum billing period - Below DS3=one month, DS3 and above=four months															
	Local Channel - Dedicated - 2-Wire Voice Grade Zone 1		1	UNCVX	ULDV2	18.32	187.51	32.21				15.20				
	Local Channel - Dedicated - 4-Wire Voice Grade Zone 1		1	UNCVX	ULDV4	19.41	187.94	32.63				15.20				
	Local Channel - Dedicated - DS1 per month Zone 1		1	UNC1X	ULDF1	39.18	172.34	149.27				15.20				
	Local Channel - Dedicated -DS1 Per Month Zone 2		2	UNC1X	ULDF1	121.58	172.34	149.27				15.20				
	Local Channel - Dedicated - DS1- Per Month Zone 3		3	UNC1X	ULDF1	70.02	172.34	149.27				15.20				
	Local Channel - Dedicated - DS3 - Per Mile per month			UNC3X	1L5NC	7.82										
	Local Channel - Dedicated - DS3 - Facility Termination per month			UNC3X	ULDF3	469.44	438.46	256.30				15.20				
	Local Channel - Dedicated - STS-1- Per Mile per month			UNCSX	1L5NC	7.82						15.20				
	Local Channel - Dedicated - STS-1 - Facility Termination per month			UNCSX	ULDFS	457.22	438.46	256.30								
UNBUNDLED LOCAL EXCHANGE SWITCHING(PORTS)																
	Exchange Ports															
	NOTE: Although the Port Rate includes all available features in GA, KY, LA & TN, the desired features will need to be ordered using retail USOCs															
	2-WIRE VOICE GRADE LINE PORT RATES (RES)															
	Exchange Ports - 2-Wire Analog Line Port- Res.			UEPSR	UEPRL	1.52	2.31	2.21				15.20				
	Exchange Ports - 2-Wire Analog Line Port with Caller ID - Res.			UEPSR	UEPRC	1.52	2.31	2.21				15.20				
	Exchange Ports - 2-Wire Analog Line Port outgoing only - Res.			UEPSR	UEPRO	1.52	2.31	2.21				15.20				
	Exchange Ports - 2-Wire VG unbundled LA extended local dialing parity Port with Caller ID - Res.			UEPSR	UEPAS	1.52	2.31	2.21				15.20				
	Exchange Ports - 2-Wire VG unbundled Louisiana Area Plus with Caller ID - Res (RUL)			UEPSR	UEPAG	1.52	2.31	2.21				15.20				

CATEGORY	RATE ELEMENTS	Interim	Zone	BCS	USOC	RATES($) Rec	Nonrecurring First	Nonrecurring Add'l	Nonrecurring Disconnect First	Nonrecurring Disconnect Add'l	Svc Order Submitted Elec per LSR	Svc Order Submitted Manually per LSR	Incremental Charge - Manual Svc Order vs. Electronic-1st	Incremental Charge - Manual Svc Order vs. Electronic-Add'l	Incremental Charge - Manual Svc Order vs. Electronic-Disc 1st	Incremental Charge - Manual Svc Order vs. Electronic-Disc Add'l
											OSS Rates($)					
											SOMEC	SOMAN	SOMAN	SOMAN	SOMAN	SOMAN
	Exchange Ports - 2-Wire VG unbundled res, low usage line port with Caller ID (LUM)			UEPSR	UEPAP	1.52	2.31	2.21				15.20				
	Subsequent Activity			UEPSR	USASC	0.00	0.00	0.00				15.20				
FEATURES																
	All Available Vertical Features			UEPSR	UEPVF	0.00	0.00	0.00				15.20				
2-WIRE VOICE GRADE LINE PORT RATES (BUS)																
	Exchange Ports - 2-Wire Analog Line Port without Caller ID - Bus			UEPSB	UEPBL	1.52	2.31	2.21				15.20				
	Exchange Ports - 2-Wire VG unbundled Line Port with unbundled port with Caller+E484 ID - Bus.			UEPSB	UEPBC	1.52	2.31	2.21				15.20				
	Exchange Ports - 2-Wire Analog Line Port outgoing only - Bus.			UEPSB	UEPBO	1.52	2.31	2.21				15.20				
	Exchange Ports - 2-Wire VG unbundled LA extended local dialing parity Port with Caller ID - Bus.			UEPSB	UEPAX	1.52	2.31	2.21				15.20				
	Exhange Ports - 2-Wire VG unbundled incoming only port with Caller ID - Bus			UEPSB	UEPB1	1.52	2.31	2.21				15.20				
	Exchange Ports - 2-Wire VG unbundled Louisiana Bus Area Calling Port with Caller ID - Bus (BUC)			UEPSB	UEPAA	1.52	2.31	2.21				15.20				
	Subsequent Activity			UEPSB	USASC	0.00	0.00	0.00				15.20				
FEATURES																
	All Available Vertical Features			UEPSB	UEPVF	0.00	0.00	0.00				15.20				
EXCHANGE PORT RATES (DID & PBX)																
	2-Wire VG Unbundled 2-Way PBX Trunk - Res			UEPSE	UEPRD	1.52	30.37	14.42				15.20				
	2-Wire VG Line Side Unbundled 2-Way PBX Trunk - Bus			UEPSP	UEPPC	1.52	30.37	14.42				15.20				
	2-Wire VG Line Side Unbundled Outward PBX Trunk - Bus			UEPSP	UEPPO	1.52	30.37	14.42				15.20				
	2-Wire VG Line Side Unbundled Incoming PBX Trunk - Bus			UEPSP	UEPP1	1.52	30.37	14.42				15.20				
	2-Wire Analog Long Distance Terminal PBX Trunk - Bus			UEPSP	UEPLD	1.52	30.37	14.42				15.20				
	2-Wire Voice Unbundled 2-Way PBX Louisiana Calling Port			UEPSP	UEPL2	1.52	30.37	14.42				15.20				
	2-Wire Voice Unbundled PBX LD Terminal Ports			UEPSP	UEPLD	1.52	30.37	14.42				15.20				
	2-Wire Vice Unbundled 2-Way PBX Usage Port			UEPSP	UEPXA	1.52	30.37	14.42				15.20				
	2-Wire Voice Unbundled PBX Toll Terminal Hotel Ports			UEPSP	UEPXB	1.52	30.37	14.42				15.20				
	2-Wire Voice Unbundled PBX LD DDD Terminals Port			UEPSP	UEPXC	1.52	30.37	14.42				15.20				
	2-Wire Voice Unbundled PBX LD Terminal Switchboard Port			UEPSP	UEPXD	1.52	30.37	14.42				15.20				
	2-Wire Voice Unbundled PBX LD Terminal Switchboard IDD Capable Port			UEPSP	UEPXE	1.52	30.37	14.42				15.20				
	2-Wire Voice Unbundled 2-Way PBX Louisiana Local Optional Callling Port			UEPSP	UEPXK	1.52	30.37	14.42				15.20				
	2-Wire Voice Unbundled 2-Way PBX Hotel/Hospital Economy Administrative Calling Port			UEPSP	UEPXL	1.52	30.37	14.42				15.20				
	2-Wire Voice Unbundled 2-Way PBX Hotel/Hospital Economy Room Calling Port			UEPSP	UEPXM	1.52	30.37	14.42				15.20				
	2-Wire Voice Unbundled 1-Way Outgoing PBX Hotel/Hospital Discount Room Calling Port			UEPSP	UEPXO	1.52	30.37	14.42				15.20				
	2-Wire Voice Unbundled 1-Way Outgoing PBX Louisiana Local Discount Calling Port			UEPSP	UEPXP	1.52	30.37	14.42				15.20				
	2-Wire Voice Unbundled 1-Way Outgoing PBX Measured Port			UEPSP	UEPXS	1.52	30.37	14.42				15.20				
	Subsequent Activity			UEPSP	USASC	0.00	0.00	0.00				15.20				
FEATURES																
	All Available Vertical Features			UEPSP UEPSE	UEPVF	0.00	0.00	0.00				15.20				
EXCHANGE PORT RATES (COIN)																
	Exchange Ports - Coin Port					1.52	2.31	2.21				15.20				
NOTE: Transmission/usage charges associated with POTS circuit switched usage will also apply to circuit switched voice and/or circuit switched data transmission by B-Channels associated with 2-wire ISDN ports.																
NOTE: Access to B Channel or D Channel Packet capabilities will be available only through BFR/New Business Request Process. Rates for the packet capabilities will be determined via the Bona Fide Request/New Business Request Process.																
UNBUNDLED LOCAL EXCHANGE SWITCHING(PORTS)																
EXCHANGE PORT RATES (DID & PBX)																
	Exchange Ports - 2-Wire DID Port			UEPEX	UEPP2	8.29	115.85	18.20				15.20				
	Exchange Ports - DDITS Port - 4-Wire DS1 Port with DID capability			UEPDD	UEPDD	68.47	196.18	92.92				15.20				
	Exchange Ports - 2-Wire ISDN Port (See Notes below.)			UEPTX UEPSX	U1PMA	10.07	70.76	51.46				15.20				

CATEGORY	RATE ELEMENTS	Interim	Zone	BCS	USOC	RATES($) Rec	Nonrecurring First	Nonrecurring Add'l	Nonrecurring Disconnect First	Nonrecurring Disconnect Add'l	Svc Order Submitted Elec per LSR	Svc Order Submitted Manually per LSR	Incremental Charge - Manual Svc Order vs. Electronic-1st	Incremental Charge - Manual Svc Order vs. Electronic-Add'l	Incremental Charge - Manual Svc Order vs. Electronic-Disc 1st	Incremental Charge - Manual Svc Order vs. Electronic-Disc Add'l
											OSS Rates($)					
											SOMEC	SOMAN	SOMAN	SOMAN	SOMAN	SOMAN
	All Features Offered			UEPTX UEPSX	UEPVF	0.00	0.00	0.00								
	NOTE: Transmission/usage charges associated with POTS circuit switched usage will also apply to circuit switched voice and/or circuit switched data transmission by B-Channels associated with 2-wire ISDN ports.															
	NOTE: Access to B Channel or D Channel Packet capabilities will be available only through BFR/New Business Request Process. Rates for the packet capabilities will be determined via the Bona Fide Request/New Business Request Process.															
	Exchange Ports - 2-Wire ISDN Port -- Channel Profiles			UEPTX UEPSX	U1UMA	0.00	0.00	0.00								
	Exchange Ports - 4-Wire ISDN DS1 Port			UEPEX	UEPEX	94.82	197.92	98.62				15.20				
UNBUNDLED LOCAL SWITCHING, PORT USAGE																
End Office Switching (Port Usage)																
	End Office Switching Function, Per MOU					0.001868										
	End Office Trunk Port - Shared, Per MOU					0.00018										
Tandem Switching (Port Usage) (Local or Access Tandem)																
	Tandem Switching Function Per MOU					0.0001067										
	Tandem Trunk Port - Shared, Per MOU					0.000222										
Common Transport																
	Common Transport - Per Mile, Per MOU					0.0000032										
	Common Transport - Facilities Termination Per MOU					0.0003748										
UNBUNDLED PORT/LOOP COMBINATIONS - COST BASED RATES																
Cost Based Rates are applied where BellSouth is required by FCC and/or State Commission rule to provide Unbundled Local Switching or Switch Ports.																
Features shall apply to the Unbundled Port/Loop Combination - Cost Based Rate section in the same manner as they are applied to the Stand-Alone Unbundled Port section of this Rate Exhibit.																
End Office and Tandem Switching Usage and Common Transport Usage rates in the Port section of this rate exhibit shall apply to all combinations of loop/port network elements except for UNE Coin Port/Loop Combinations.																
For Georgia, Kentucky, Louisiana, MIssissippi, South Carolina and Tennessee, the recurring UNE Port and Loop charges listed apply to Currently Combined and Not Currently Combined Combos. The first and additional Port nonrecurring charges apply to Not Currently Combined Combos for all states. In GA, KY, LA, MS, SC and TN these nonrecurring charges are commission ordered cost based rates and in AL, FL and NC these nonrecurring charges are Market Rates and are also listed in the Market Rate section. For Currently Combined Combos in all other states, the nonrecurring charges shall be those identified in the Nonrecurring - Currently Combined sections.																
2-WIRE VOICE GRADE LOOP WITH 2-WIRE LINE PORT (RES)																
UNE Port/Loop Combination Rates																
	2-Wire VG Loop/Port Combo - Zone 1		1			13.13										
	2-Wire VG Loop/Port Combo - Zone 2		2			23.75										
	2-Wire VG Loop/Port Combo - Zone 3		3			49.62										
UNE Loop Rates																
	2-Wire Voice Grade Loop (SL1) - Zone 1		1	UEPRX	UEPLX	11.77										
	2-Wire Voice Grade Loop (SL1) - Zone 2		2	UEPRX	UEPLX	22.39										
	2-Wire Voice Grade Loop (SL1) - Zone 3		3	UEPRX	UEPLX	48.26										
2-Wire Voice Grade Line Port Rates (Res)																
	2-Wire voice unbundled port - residence			UEPRX	UEPRL	1.36	38.85	19.08				15.20				
	2-Wire voice unbundled port with Caller ID - res			UEPRX	UEPRC	1.36	38.85	19.08				15.20				
	2-Wire voice unbundled port outgoing only - res			UEPRX	UEPRO	1.36	38.85	19.08				15.20				
	2-Wire voice Grade unbundled Louisiana extended local dialing parity port with Caller ID - res			UEPRX	UEPAS	1.36	38.85	19.08				15.20				
	2-Wire voice unbundled Louisiana Area Plus with Caller ID - res (RUL)			UEPRX	UEPAG	1.36	38.85	19.08				15.20				
	2-Wire voice unbundles res, low usage line port with Caller ID (LUM)			UEPRX	UEPAP	1.36	38.85	19.08				15.20				
FEATURES																
	All Features Offered			UEPRX	UEPVF	0.00	0.00	0.00				15.20				
LOCAL NUMBER PORTABILITY																
	Local Number Portability (1 per port)			UEPRX	LNPCX	0.35										
NONRECURRING CHARGES (NRCs) - CURRENTLY COMBINED																
	2-Wire Voice Grade Loop / Line Port Combination - Conversion - Switch-as-is			UEPRX	USAC2		0.10	0.10				15.20				
	2-Wire Voice Grade Loop / Line Port Combination - Conversion - Switch with change			UEPRX	USACC		0.10	0.10				15.20				
ADDITIONAL NRCs																
	2-Wire Voice Grade Loop/Line Port Combination - Subsequent Activity			UEPRX	USAS2	0.00	0.00	0.00				15.20				
2-WIRE VOICE GRADE LOOP WITH 2-WIRE LINE PORT (BUS)																
UNE Port/Loop Combination Rates																
	2-Wire VG Loop/Port Combo - Zone 1		1			13.13										
	2-Wire VG Loop/Port Combo - Zone 2		2			23.75									20.00	
	2-Wire VG Loop/Port Combo - Zone 3		3			49.62										
UNE Loop Rates																

UNBUNDLED NETWORK ELEMENTS - Louisiana													Attachment: 2		Exhibit: B	
CATEGORY	RATE ELEMENTS	Interim	Zone	BCS	USOC	RATES($)					Svc Order Submitted Elec per LSR	Svc Order Submitted Manually per LSR	Incremental Charge - Manual Svc Order vs. Electronic-1st	Incremental Charge - Manual Svc Order vs. Electronic-Add'l	Incremental Charge - Manual Svc Order vs. Electronic-Disc 1st	Incremental Charge - Manual Svc Order vs. Electronic-Disc Add'l
						Rec	Nonrecurring		Nonrecurring Disconnect		OSS Rates($)					
							First	Add'l	First	Add'l	SOMEC	SOMAN	SOMAN	SOMAN	SOMAN	SOMAN
	2-Wire Voice Grade Loop (SL1) - Zone 1		1	UEPBX	UEPLX	11.77										
	2-Wire Voice Grade Loop (SL1) - Zone 2		2	UEPBX	UEPLX	22.39										
	2-Wire Voice Grade Loop (SL1) - Zone 3		3	UEPBX	UEPLX	48.26										
2-Wire Voice Grade Line Port (Bus)																
	2-Wire voice unbundled port without Caller ID - bus			UEPBX	UEPBL	1.36	38.85	19.08				15.20				
	2-Wire voice unbundled port with Caller + E484 ID - bus			UEPBX	UEPBC	1.36	38.85	19.08				15.20				
	2-Wire voice unbundled port outgoing only - bus			UEPBX	UEPBO	1.36	38.85	19.08				15.20				
	2-Wire voice Grade unbundled Louisiana extended local dialing parity port with Caller ID - bus			UEPBX	UEPAX	1.36	38.85	19.08				15.20				
	2-Wire voice unbundled incoming only port with Caller ID - Bus			UEPBX	UPEB1	1.36	38.85	19.08				15.20				
	2-Wire voice unbundled Louisiana Bus Area Calling Port with Caller ID (BUC)			UEPBX	UEPAA	1.36	38.85	19.08				15.20				
LOCAL NUMBER PORTABILITY																
	Local Number Portability (1 per port)			UEPBX	LNPCX	0.35										
FEATURES																
	All Features Offered			UEPBX	UEPVF	0.00	0.00	0.00				15.20				
NONRECURRING CHARGES (NRCs) - CURRENTLY COMBINED																
	2-Wire Voice Grade Loop / Line Port Combination - Conversion - Switch-as-is			UEPBX	USAC2		0.10	0.10				15.20				
	2-Wire Voice Grade Loop / Line Port Combination - Conversion - Switch with change			UEPBX	USACC		0.10	0.10				15.20				
ADDITIONAL NRCs																
	2-Wire Voice Grade Loop/Line Port Combination - Subsequent Activity			UEPBX	USAS2		0.00	0.00				15.20				
2-WIRE VOICE GRADE LOOP WITH 2-WIRE LINE PORT (RES - PBX)																
UNE Port/Loop Combination Rates																
	2-Wire VG Loop/Port Combo - Zone 1		1			13.13										
	2-Wire VG Loop/Port Combo - Zone 2		2			23.75										
	2-Wire VG Loop/Port Combo - Zone 3		3			49.62										
UNE Loop Rates																
	2-Wire Voice Grade Loop (SL 1) - Zone 1		1	UEPRG	UEPLX	11.77										
	2-Wire Voice Grade Loop (SL 1) - Zone 2		2	UEPRG	UEPLX	22.39										
	2-Wire Voice Grade Loop (SL 1) - Zone 3		3	UEPRG	UEPLX	48.26										
2-Wire Voice Grade Line Port Rates (RES - PBX)																
	2-Wire VG Unbundled Combination 2-Way PBX Trunk Port - Res			UEPRG	UEPRD	1.36	66.91	31.29				15.20				
LOCAL NUMBER PORTABILITY																
	Local Number Portability (1 per port)			UEPRG	LNPCP	3.15	0.00	0.00				15.20				
FEATURES																
	All Features Offered			UEPRG	UEPVF	0.00	0.00	0.00				15.20				
NONRECURRING CHARGES (NRCs) - CURRENTLY COMBINED																
	2-Wire Voice Grade Loop/ Line Port Combination (PBX) - Conversion - Switch-As-Is			UEPRG	USAC2		7.68	1.85				15.20				
	2-Wire Voice Grade Loop/ Line Port Combination (PBX) - Conversion - Switch with Change			UEPRG	USACC		7.68	1.85				15.20				
ADDITIONAL NRCs																
	2-Wire Voice Grade Loop/ Line Port Combination (PBX) - Subsequent Activity			UEPRG	USAS2	0.00	0.00	0.00				15.20				
	PBX Subsequent Activity - Change/Rearrange Multiline Hunt Group						7.11	7.11				15.20				
2-WIRE VOICE GRADE LOOP WITH 2-WIRE LINE PORT (BUS - PBX)																
UNE Port/Loop Combination Rates																
	2-Wire VG Loop/Port Combo - Zone 1		1			13.13										
	2-Wire VG Loop/Port Combo - Zone 2		2			23.75										
	2-Wire VG Loop/Port Combo - Zone 3		3			49.62										
UNE Loop Rates																
	2-Wire Voice Grade Loop (SL 1) - Zone 1		1	UEPPX	UEPLX	11.77										
	2-Wire Voice Grade Loop (SL 1) - Zone 2		2	UEPPX	UEPLX	22.39										
	2-Wire Voice Grade Loop (SL 1) - Zone 3		3	UEPPX	UEPLX	48.26										

UNBUNDLED NETWORK ELEMENTS - Louisiana													Attachment: 2		Exhibit: B	
CATEGORY	RATE ELEMENTS	Interim	Zone	BCS	USOC	RATES($)					Svc Order Submitted Elec per LSR	Svc Order Submitted Manually per LSR	Incremental Charge - Manual Svc Order vs. Electronic-1st	Incremental Charge - Manual Svc Order vs. Electronic-Add'l	Incremental Charge - Manual Svc Order vs. Electronic-Disc 1st	Incremental Charge - Manual Svc Order vs. Electronic-Disc Add'l
						Rec	Nonrecurring		Nonrecurring Disconnect		OSS Rates($)					
							First	Add'l	First	Add'l	SOMEC	SOMAN	SOMAN	SOMAN	SOMAN	SOMAN
2-Wire Voice Grade Line Port Rates (BUS - PBX)																
	Line Side Unbundled Combination 2-Way PBX Trunk Port - Bus			UEPPX	UEPPC	1.36	66.91	31.29				15.20				
	Line Side Unbundled Outward PBX Trunk Port - Bus			UEPPX	UEPPO	1.36	66.91	31.29				15.20				
	Line Side Unbundled Incoming PBX Trunk Port - Bus			UEPPX	UEPP1	1.36	66.91	31.29				15.20				
	2-Wire Voice Unbundled 2-Way Combination PBX Louisiana Calling Port			UEPPX	UEPL2	1.36	66.91	31.29				15.20				
	2-Wire Voice Unbundled PBX LD Terminal Ports			UEPPX	UEPLD	1.36	66.91	31.29				15.20				
	2-Wire Voice Unbundled 2-Way Combination PBX Usage Port			UEPPX	UEPXA	1.36	66.91	31.29				15.20				
	2-Wire Voice Unbundled PBX Toll Terminal Hotel Ports			UEPPX	UEPXB	1.36	66.91	31.29				15.20				
	2-Wire Voice Unbundled PBX LD DDD Terminals Port			UEPPX	UEPXC	1.36	66.91	31.29				15.20				
	2-Wire Voice Unbundled PBX LD Terminal Switchboard Port			UEPPX	UEPXD	1.36	66.91	31.29				15.20				
	2-Wire Voice Unbundled PBX LD Terminal Switchboard IDD Capable Port			UEPPX	UEPXE	1.36	66.91	31.29				15.20				
	2-Wire Voice Unbundled 2-Way PBX Louisiana Local Optional Calling Port			UEPPX	UEPXK	1.36	66.91	31.29				15.20				
	2-Wire Voice Unbundled 2-Way PBX Hotel/Hospital Economy Administrative Calling Port			UEPPX	UEPXL	1.36	66.91	31.29				15.20				
	2-Wire Voice Unbundled 2-Way PBX Hotel/Hospital Economy Room Calling Port			UEPPX	UEPXM	1.36	66.91	31.29				15.20				
	2-Wire Voice Unbundled 1-Way Outgoing PBX Hotel/Hospital Discount Room Calling Port			UEPPX	UEPXO	1.36	66.91	31.29				15.20				
	2-Wire Voice Unbundled 1-Way Outgoing PBX Louisiana Local Discount Calling Port			UEPPX	UEPXP	1.36	66.91	31.29				15.20				
	2-Wire Voice Unbundled 1-Way Outgoing PBX Measured Port			UEPPX	UEPXS	1.36	66.91	31.29				15.20				
LOCAL NUMBER PORTABILITY																
	Local Number Portability (1 per port)			UEPPX	LNPCP	3.15	0.00	0.00				15.20				
FEATURES																
	All Features Offered			UEPPX	UEPVF	0.00	0.00	0.00				15.20				
NONRECURRING CHARGES (NRCs) - CURRENTLY COMBINED																
	2-Wire Voice Grade Loop/ Line Port Combination (PBX) - Conversion - Switch-As-Is			UEPPX	USAC2		7.68	1.85				15.20				
	2-Wire Voice Grade Loop/ Line Port Combination (PBX) - Conversion - Switch with Change			UEPPX	USACC		7.68	1.85				15.20				
ADDITIONAL NRCs																
	2-Wire Voice Grade Loop/ Line Port Combination (PBX) - Subsequent Activity			UEPPX	USAS2	0.00	0.00	0.00				15.20				
	PBX Subsequent Activity - Change/Rearrange Multiline Hunt Group						7.11	7.11				15.20				
2-WIRE VOICE GRADE LOOP WITH 2-WIRE ANALOG LINE COIN PORT																
UNE Port/Loop Combination Rates																
	2-Wire VG Coin Port/Loop Combo – Zone 1		1			13.13										
	2-Wire VG Coin Port/Loop Combo – Zone 2		2			23.75										
	2-Wire VG Coin Port/Loop Combo – Zone 3		3			49.62										
UNE Loop Rates																
	2-Wire Voice Grade Loop (SL1) - Zone 1		1	UEPCO	UEPLX	11.77										
	2-Wire Voice Grade Loop (SL1) - Zone 2		2	UEPCO	UEPLX	22.39										
	2-Wire Voice Grade Loop (SL1) - Zone 3		3	UEPCO	UEPLX	48.26										
2-Wire Voice Grade Line Ports (COIN)																
	2-Wire Coin 2-Way without Operator Screening and without Blocking (AL, KY, LA, MS)			UEPCO	UEPRF	1.36	38.85	19.08				15.20				
	2-Wire Coin 2-Way with Operator Screening and Blocking: 011, 900/976, 1+DDD (AL, KY, LA, MS)			UEPCO	UEPRA	1.36	38.85	19.08				15.20				
	2-Wire Coin 2-Way with Operator Screening and 011 Blocking (AL, LA, MS)			UEPCO	UEPRB	1.36	38.85	19.08				15.20				
	2-Wire Coin 2-Way with Operator Screening & Blocking: 900/976, 1+DDD, 011+, & Local (AL, KY, LA, MS)			UEPCO	UEPCD	1.36	38.85	19.08				15.20				
	2-Wire Coin Outward without Blocking and without Operator Screening (KY, LA, MS)			UEPCO	UEPRN	1.36	38.85	19.08				15.20				

CATEGORY	RATE ELEMENTS	Interim	Zone	BCS	USOC	RATES($) Rec	Nonrecurring First	Nonrecurring Add'l	Nonrecurring Disconnect First	Nonrecurring Disconnect Add'l	Svc Order Submitted Elec per LSR	Svc Order Submitted Manually per LSR	Incremental Charge - Manual Svc Order vs. Electronic-1st	Incremental Charge - Manual Svc Order vs. Electronic-Add'l	Incremental Charge - Manual Svc Order vs. Electronic-Disc 1st	Incremental Charge - Manual Svc Order vs. Electronic-Disc Add'l
											OSS Rates($)					
											SOMEC	SOMAN	SOMAN	SOMAN	SOMAN	SOMAN
	2-Wire Coin Outward with Operator Screening and 011 Blocking (LA)			UEPCO	UEPLA	1.36	38.85	19.08				15.20				
	2-Wire Coin Outward with Operator Screening and Blocking: 011, 900/976, 1+DDD (AL, KY, LA, MS)			UEPCO	UEPRH	1.36	38.85	19.08				15.20				
	2-Wire Coin Outward Operator Screening & Blocking: 900/976, 1+DDD, 011+, and Local (AL, KY, LA, MS)			UEPCO	UEPCN	1.36	38.85	19.08				15.20				
	2-Wire Coin 2-Way Smartline with 900/976 (Louisiana only)			UEPCO	UEPNA	1.36	38.85	19.08				15.20				
	2-Wire Coin Outward Smartline with 900/976 (Louisiana only)			UEPCO	UEPCB	1.36	38.85	19.08				15.20				
ADDITIONAL UNE COIN PORT/LOOP (RC)																
	UNE Coin Port/Loop Combo Usage (Flat Rate)			UEPCO	URECU	1.81	0.00	0.00				15.20				
LOCAL NUMBER PORTABILITY																
	Local Number Portability (1 per port)			UEPCO	LNPCX	0.35										
NONRECURRING CHARGES - CURRENTLY COMBINED																
	2-Wire Voice Grade Loop / Line Port Combination - Conversion - Switch-as-is			UEPCO	USAC2		0.10	0.10				15.20				
	2-Wire Voice Grade Loop / Line Port Combination - Conversion - Switch with change			UEPCO	USACC		0.10	0.10				15.20				
ADDITIONAL NRCs																
	2-Wire Voice Grade Loop/Line Port Combination - Subsequent Activity			UEPCO	USAS2		0.00	0.00				15.20				
UNBUNDLED REMOTE CALL FORWARDING - RES																
Non-Recurring																
UNBUNDLED REMOTE CALL FORWARDING - Bus																
	Unbundled Remote Call Forwarding, InterState/Intra LATA-Bus			UEPVB	UEPVJ	1.52	2.31	2.21				15.20				
Non-Recurring																
2-WIRE VOICE LOOP/ 2WIRE VOICE GRADE IO TRANSPORT/ 2-WIRE LINE PORT (RES)																
2-WIRE VOICE LOOP/ 2WIRE VOICE GRADE IO TRANSPORT/ 2-WIRE LINE PORT (BUS)																
UNBUNDLED PORT/LOOP COMBINATIONS - COST BASED RATES																
2-WIRE VOICE GRADE LOOP- BUS ONLY - WITH 2-WIRE DID TRUNK PORT																
UNE Port/Loop Combination Rates																
	2-Wire VG Loop/2-Wire DID Trunk Port Combo - UNE Zone 1		1			23.20										
	2-Wire VG Loop/2-Wire DID Trunk Port Combo - UNE Zone 2		2			33.62										
	2-Wire VG Loop/2-Wire DID Trunk Port Combo - UNE Zone 3		3			58.73										
UNE Loop Rates																
	2-Wire Analog Voice Grade Loop - (SL2) - UNE Zone 1		1	UEPPX	UECD1	14.93						15.20				
	2-Wire Analog Voice Grade Loop - (SL2) - UNE Zone 2		2	UEPPX	UECD1	25.35						15.20				
	2-Wire Analog Voice Grade Loop - (SL2) - UNE Zone 3		3	UEPPX	UECD1	50.46						15.20				
UNE Port Rate																
	Exchange Ports - 2-Wire DID Port			UEPPX	UEPD1	8.27	217.95	83.92				15.20				
NONRECURRING CHARGES - CURRENTLY COMBINED																
	2-Wire Voice Grade Loop / 2-Wire DID Trunk Port Combination - Switch-as-is			UEPPX	USAC1		7.10	1.81				15.20				
	2-Wire Voice Grade Loop / 2-Wire DID Trunk Port Conversion with BellSouth Allowable Changes			UEPPX	USA1C		7.10	1.81				15.20				
ADDITIONAL NRCs																
	2-Wire DID Subsequent Activity - Add Trunks, Per Trunk			UEPPX	USAS1		26.01	26.01				15.20				
Telephone Number/Trunk Group Establisment Charges																
	DID Trunk Termination (One Per Port)			UEPPX	NDT	0.00	0.00	0.00				15.20				
	Additional DID Numbers for each Group of 20 DID Numbers			UEPPX	ND4	0.00	0.00	0.00				15.20				
	DID Numbers, Non- consecutive DID Numbers , Per Number			UEPPX	ND5	0.00	0.00	0.00				15.20				
	Reserve Non-Consecutive DID numbers			UEPPX	ND6	0.00	0.00	0.00				15.20				
	Reserve DID Numbers			UEPPX	NDV	0.00	0.00	0.00				15.20				
LOCAL NUMBER PORTABILITY																
	Local Number Portability (1 per port)			UEPPX	LNPCP	3.15	0.00	0.00								
2-WIRE ISDN DIGITAL GRADE LOOP WITH 2-WIRE ISDN DIGITAL LINE SIDE PORT																
UNE Port/Loop Combination Rates																
	2W ISDN Digital Grade Loop/2W ISDN Digital Line Side Port - UNE Zone 1		1	UEPPB UEPPR		27.48										

CATEGORY	RATE ELEMENTS	Interim	Zone	BCS	USOC	RATES($) Rec	Nonrecurring First	Nonrecurring Add'l	Nonrecurring Disconnect First	Nonrecurring Disconnect Add'l	Svc Order Submitted Elec per LSR	Svc Order Submitted Manually per LSR	Incremental Charge - Manual Svc Order vs. Electronic-1st	Incremental Charge - Manual Svc Order vs. Electronic-Add'l	Incremental Charge - Manual Svc Order vs. Electronic-Disc 1st	Incremental Charge - Manual Svc Order vs. Electronic-Disc Add'l
											OSS Rates($)					
											SOMEC	SOMAN	SOMAN	SOMAN	SOMAN	SOMAN
	2W ISDN Digital Grade Loop/2W ISDN Digital Line Side Port - UNE Zone 2		2	UEPPB UEPPR		40.34										
	2W ISDN Digital Grade Loop/2W ISDN Digital Line Side Port - UNE Zone 3		3	UEPPB UEPPR		70.99										
UNE Loop Rates																
	2-Wire ISDN Digital Grade Loop - UNE Zone 1		1	UEPPB UEPPR	USL2X	19.09						15.20				
	2-Wire ISDN Digital Grade Loop - UNE Zone 2		2	UEPPB UEPPR	USL2X	31.95						15.20				
	2-Wire ISDN Digital Grade Loop - UNE Zone 3		3	UEPPB UEPPR	USL2X	62.60						15.20				
UNE Port Rate																
	Exchange Port - 2-Wire ISDN Line Side Port			UEPPB UEPPR	UEPPB	8.39	184.10	128.42				15.20				
NONRECURRING CHARGES - CURRENTLY COMBINED																
	2-Wire ISDN Digital Grade Loop / 2-Wire ISDN Line Side Port Combination - Conversion			UEPPB UEPPR	USACB	0.00	37.40	26.23				15.20				
ADDITIONAL NRCs																
LOCAL NUMBER PORTABILITY																
	Local Number Portability (1 per port)			UEPPB UEPPR	LNPCX	0.35	0.00	0.00								
B-CHANNEL USER PROFILE ACCESS:																
	CVS/CSD (DMS/5ESS)			UEPPB UEPPR	U1UCA	0.00	0.00	0.00								
	CVS (EWSD)			UEPPB UEPPR	U1UCB	0.00	0.00	0.00								
	CSD			UEPPB UEPPR	U1UCC	0.00	0.00	0.00								
B-CHANNEL AREA PLUS USER PROFILE ACCESS: (AL,KY,LA,MS SC,MS, & TN)																
	CVS/CSD (DMS/5ESS)			UEPPB UEPPR	U1UCD	0.00	0.00	0.00								
	CVS (EWSD)			UEPPB UEPPR	U1UCE	0.00	0.00	0.00								
	CSD			UEPPB UEPPR	U1UCF	0.00	0.00	0.00								
USER TERMINAL PROFILE																
	User Terminal Profile (EWSD only)			UEPPB UEPPR	U1UMA	0.00	0.00	0.00								
VERTICAL FEATURES																
	All Vertical Features - One per Channel B User Profile			UEPPB UEPPR	UEPVF	0.00	0.00	0.00				15.20				
INTEROFFICE CHANNEL MILEAGE																
	Interoffice Channel mileage each, including first mile and facilities termination			UEPPB UEPPR	M1GNC	22.613	39.36	26.62				15.20				
	Interoffice Channel mileage each, additional mile			UEPPB UEPPR	M1GNM	0.013	0.00	0.00				15.20				
4-WIRE DS1 DIGITAL LOOP WITH 4-WIRE ISDN DS1 DIGITAL TRUNK PORT																
UNE Port/Loop Combination Rates																
	4W DS1 Digital Loop/4W ISDN DS1 Digital Trunk Port - UNE Zone 1		1	UEPPP		180.52										
	4W DS1 Digital Loop/4W ISDN DS1 Digital Trunk Port - UNE Zone 2		2	UEPPP		289.78										
	4W DS1 Digital Loop/4W ISDN DS1 Digital Trunk Port - UNE Zone 3		3	UEPPP		586.76										
UNE Loop Rates																
	4-Wire DS1 Digital Loop - UNE Zone 1		1	UEPPP	USL4P	85.70						15.20				
	4-Wire DS1 Digital Loop - UNE Zone 2		2	UEPPP	USL4P	194.96						15.20				
	4-Wire DS1 Digital Loop - UNE Zone 3		3	UEPPP	USL4P	491.94						15.20				
UNE Port Rate																
	Exchange Ports - 4-Wire ISDN DS1 Port			UEPPP	UEPPP	94.82	443.08	251.60				15.20				
NONRECURRING CHARGES - CURRENTLY COMBINED																
	4-Wire DS1 Digital Loop / 4-Wire ISDN DS1 Digital Trunk Port Combination - Conversion -Switch-as-is			UEPPP	USACP	0.00	115.63	76.29				15.20				
ADDITIONAL NRCs																
	4-Wire DS1 Loop/4-W ISDN Digtl Trk Port - Subsqt Actvy-Inward/two way tel nos within Std Allowance (except NC)			UEPPP	PR7TF		0.48					15.20				
	4-Wire DS1 Loop / 4-Wire ISDN DS1 Digital Trunk Port - Outward Tel Numbers (All States except NC)			UEPPP	PR7TO		11.18	11.18				15.20				
	4-Wire DS1 Loop / 4-Wire ISDN DS1 Digital Trk Port - Subsequent Inward Tel Nos Above Std Allowance			UEPPP	PR7ZT		22.35	22.35				15.20				
LOCAL NUMBER PORTABILITY																
	Local Number Portability (1 per port)			UEPPP	LNPCN	1.75										

UNBUNDLED NETWORK ELEMENTS - Louisiana													Attachment: 2		Exhibit: B	
CATEGORY	RATE ELEMENTS	Interim	Zone	BCS	USOC	RATES($)					Svc Order Submitted Elec per LSR	Svc Order Submitted Manually per LSR	Incremental Charge - Manual Svc Order vs. Electronic-1st	Incremental Charge - Manual Svc Order vs. Electronic-Add'l	Incremental Charge - Manual Svc Order vs. Electronic-Disc 1st	Incremental Charge - Manual Svc Order vs. Electronic-Disc Add'l
						Rec	Nonrecurring		Nonrecurring Disconnect		OSS Rates($)					
							First	Add'l	First	Add'l	SOMEC	SOMAN	SOMAN	SOMAN	SOMAN	SOMAN
INTERFACE (Provsioning Only)																
	Voice/Data			UEPPP	PR71V	0.00	0.00	0.00								
	Digital Data			UEPPP	PR71D	0.00	0.00	0.00								
	Inward Data			UEPPP	PR71E	0.00	0.00	0.00								
New or Additional "B" Channel																
	New or Additional - Voice/Data B Channel			UEPPP	PR7BV	0.00	14.11					15.20				
	New or Additional - Digital Data B Channel			UEPPP	PR7BF	0.00	14.11					15.20				
	New or Additional Inward Data B Channel			UEPPP	PR7BD	0.00	14.11					15.20				
CALL TYPES																
	Inward			UEPPP	PR7C1	0.00	0.00	0.00								
	Outward			UEPPP	PR7C0	0.00	0.00	0.00								
	Two-way			UEPPP	PR7CC	0.00	0.00	0.00								
Interoffice Channel Mileage																
	Fixed Each Including First Mile			UEPPP	1LN1A	70.7352	86.69	79.44				15.20				
	Each Airline-Fractional Additional Mile			UEPPP	1LN1B	0.2652										
4-WIRE DS1 DIGITAL LOOP WITH 4-WIRE DDITS TRUNK PORT																
UNE Port/Loop Combination Rates																
	4W DS1 Digital Loop/4W DDITS Trunk Port - UNE Zone 1		1	UEPDC		154.17						15.20				
	4W DS1 Digital Loop/4W DDITS Trunk Port - UNE Zone 2		2	UEPDC		263.43						15.20				
	4W DS1 Digital Loop/4W DDITS Trunk Port - UNE Zone 3		3	UEPDC		560.41						15.20				
UNE Loop Rates																
	4-Wire DS1 Digital Loop - UNE Zone 1		1	UEPDC	USLDC	85.70						15.20				
	4-Wire DS1 Digital Loop - UNE Zone 2		2	UEPDC	USLDC	194.96						15.20				
	4-Wire DS1 Digital Loop - UNE Zone 3		3	UEPDC	USLDC	491.94						15.20				
UNE Port Rate																
	4-Wire DDITS Digital Trunk Port			UEPDC	UDD1T	68.47	441.34	245.90				15.20				
NONRECURRING CHARGES - CURRENTLY COMBINED																
	4-Wire DS1 Digital Loop / 4-Wire DDITS Trunk Port Combination - Switch-as-is			UEPDC	USAC4		125.75	65.08				15.20				
	4-Wire DS1 Digital Loop / 4-Wire DDITS Trunk Port Combination - Conversion with DS1 Changes			UEPDC	USAWA		125.75	65.08				15.20				
	4-Wire DS1 Digital Loop / 4-Wire DDITS Trunk Port Combination - Conversion with Change - Trunk			UEPDC	USAWB		125.75	65.08				15.20				
ADDITIONAL NRCs																
	4-Wire DS1 Loop / 4-Wire DDITS Trunk Port - NRC - Subsequent Channel Activation/Chan - 2-Way Trunk			UEPDC	UDTTA		14.06	14.06				15.20				
	4-Wire DS1 Loop / 4-Wire DDITS Trunk Port - Subsequent Channel Activation/Chan - 1-Way Outward Trunk			UEPDC	UDTTB		14.06	14.06				15.20				
	4-Wire DS1 Loop / 4-Wire DDITS Trunk Port - Subsqnt Channel Activation/Chan Inward Trunk w/out DID			UEPDC	UDTTC		14.06	14.06				15.20				
	4-Wire DS1 Loop / 4-Wire DDITS Trunk Port - Subsqnt Chan Activation Per Chan - Inward Trunk with DID			UEPDC	UDTTD		14.06	14.06				15.20				
	4-Wire DS1 Loop / 4-Wire DDITS Trunk Port - Subsqnt Chan Activation / Chan - 2-Way DID w User Trans			UEPDC	UDTTE		14.06	14.06				15.20				
BIPOLAR 8 ZERO SUBSTITUTION																
	B8ZS -Superframe Format			UEPDC	CCOSF		0.00	605.00				15.20				
	B8ZS - Extended Superframe Format			UEPDC	CCOEF		0.00	605.00				15.20				
Alternate Mark Inversion																
	AMI -Superframe Format			UEPDC	MCOSF		0.00	0.00								
	AMI - Extended SuperFrame Format			UEPDC	MCOPO		0.00	0.00								
Telephone Number/Trunk Group Establisment Charges																
	Telephone Number for 2-Way Trunk Group			UEPDC	UDTGX	0.00						15.20				
	Telephone Number for 1-Way Outward Trunk Group			UEPDC	UDTGY	0.00						15.20				
	Telephone Number for 1-Way Inward Trunk Group Without DID			UEPDC	UDTGZ	0.00						15.20				
	DID Numbers for each Group of 20 DID Numbers			UEPDC	ND4	0.00						15.20				
	DID Numbers, Non- consecutive DID Numbers , Per Number			UEPDC	ND5	0.00						15.20				
	Reserve Non-Consecutive DID Nos.			UEPDC	ND6	0.00	0.00	0.00				15.20				
	Reserve DID Numbers			UEPDC	NDV	0.00	0.00	0.00				15.20				
Dedicated DS1 (Interoffice Channel Mileage) - FX/FCO for 4-Wire DS1 Digital Loop with 4-Wire DDITS Trunk Port																

CATEGORY	RATE ELEMENTS	Interim	Zone	BCS	USOC	RATES($) Rec	Nonrecurring First	Nonrecurring Add'l	Nonrecurring Disconnect First	Nonrecurring Disconnect Add'l	Svc Order Submitted Elec per LSR	Svc Order Submitted Manually per LSR	Incremental Charge - Manual Svc Order vs. Electronic-1st	Incremental Charge - Manual Svc Order vs. Electronic-Add'l	Incremental Charge - Manual Svc Order vs. Electronic-Disc 1st	Incremental Charge - Manual Svc Order vs. Electronic-Disc Add'l
											OSS Rates($)					
							First	Add'l	First	Add'l	SOMEC	SOMAN	SOMAN	SOMAN	SOMAN	SOMAN
	Interoffice Channel Mileage - Fixed rate 0-8 miles (Facilities Termination)			UEPDC	1LNO1	70.47	86.69	79.44				15.20				
	Interoffice Channel Mileage - Additional rate per mile - 0-8 miles			UEPDC	1LNOA	0.2652	0.00	0.00								
	Interoffice Channel Mileage - Fixed rate 9-25 miles (Facilities Termination)			UEPDC	1LNO2	0.00	0.00	0.00								
	Interoffice Channel Mileage - Additional rate per mile - 9-25 miles			UEPDC	1LNOB	0.2652	0.00	0.00								
	Interoffice Channel Mileage - Fixed rate 25+ miles (Facilities Termination)			UEPDC	1LNO3	0.00	0.00	0.00	0.00							
	Interoffice Channel Mileage - Additional rate per mile - 25+ miles			UEPDC	1LNOC	0.2652	0.00	0.00								
	Local Number Portability, per DS0 Activated			UEPDC	LNPCP	3.15	0.00	0.00	0.00							
	Central Office Termininating Point			UEPDC	CTG	0.00										
4-WIRE DS1 LOOP WITH CHANNELIZATION WITH PORT																
System is 1 DS1 Loop, 1 D4 Channel Bank, and up to 24 Feature Activations																
Each System can have up to 24 combinations of rates depending on type and number of ports used																
UNE DS1 Loop																
	4-Wire DS1 Loop - UNE Zone 1		1	UEPMG	USLDC	85.70	0.00	0.00				15.20				
	4-Wire DS1 Loop - UNE Zone 2		2	UEPMG	USLDC	194.96	0.00	0.00				15.20				
	4-Wire DS1 Loop - UNE Zone 3		3	UEPMG	USLDC	491.94	0.00	0.00				15.20				
UNE DSO Channelization Capacities (D4 Channel Bank Configurations)																
	24 DSO Channel Capacity - 1 per DS1			UEPMG	VUM24	97.35	0.00	0.00				15.20				
	48 DSO Channel Capacity - 1 per 2 DS1s			UEPMG	VUM48	194.70	0.00	0.00				15.20				
	96 DSO Channel Capacity -1per 4 DS1s			UEPMG	VUM96	389.40	0.00	0.00				15.20				
	144 DS0 Channel Capacity - 1 per 6 DS1s			UEPMG	VUM14	584.10	0.00	0.00				15.20				
	192 DS0 Channel Capacity -1 per 8 DS1s			UEPMG	VUM19	778.80	0.00	0.00				15.20				
	240 DS0 Channel Capacity - 1 per 10 DS1s			UEPMG	VUM20	973.50	0.00	0.00				15.20				
	288 DS0 Channel Capacity - 1 per 12 DS1s			UEPMG	VUM28	1,168.20	0.00	0.00				15.20				
	384 DS0 Channel Capacity - 1 per 16 DS1s			UEPMG	VUM38	1,557.60	0.00	0.00				15.20				
	480 DS0 Channel Capacity - 1 per 20 DS1s			UEPMG	VUM40	1,947.00	0.00	0.00				15.20				
	576 DS0 Channel Capacity -1 per 24 DS1s			UEPMG	VUM57	2,336.40	0.00	0.00				15.20				
	672 DS0 Channel Capacity - 1 per 28 DS1s			UEPMG	VUM67	2,725.80	0.00	0.00				15.20				
Non-Recurring Charges (NRC) Associated with 4-Wire DS1 Loop with Channeliztion with Port - Conversion Charge Based on a System																
A Minimum System configuration is One (1) DS1, One (1) D4 Channel Bank, and Up To 24 DSO Ports with Feature Activations.																
Multiples of this configuration functioning as one are considered Add'l after the minimum system configuration is counted.																
	NRC - Conversion (Currently Combined) with or without BellSouth Allowed Changes			UEPMG	USAC4	0.00	146.13	8.12				15.20				
System Additions at End User Locations Where 4-Wire DS1 Loop with Channelization with Port Combination Currently Exists and																
New (Not Currently Combined) In GA, KY, LA, MS & TN Only																
	1 DS1/D4 Channel Bank - Add NRC for each Port and Assoc Fea Activation - New GA, LA, KY, MS, &TN Only			UEPMG	VUMD4	0.00	715.54	467.54				15.20				
Bipolar 8 Zero Substitution																
	Clear Channel Capability Format, superframe - Subsequent Activity Only			UEPMG	CCOSF	0.00	0.00	605.00				15.20				
	Clear Channel Capability Format - Extended Superframe - Subsequent Activity Only			UEPMG	CCOEF	0.00	0.00	605.00				15.20				
Alternate Mark Inversion (AMI)																
	Superframe Format			UEPMG	MCOSF	0.00	0.00	0.00								
	Extended Superframe Format			UEPMG	MCOPO	0.00	0.00	0.00								
Exchange Ports Associated with 4-Wire DS1 Loop with Channelization with Port																
Exchange Ports																
	Line Side Combination Channelized PBX Trunk Port - Business			UEPPX	UEPCX	1.52	0.00	0.00	0.00	0.00		15.20				
	Line Side Outward Channelized PBX Trunk Port - Business			UEPPX	UEPOX	1.52	0.00	0.00	0.00	0.00		15.20				
	Line Side Inward Only Channelized PBX Trunk Port without DID			UEPPX	UEP1X	1.52	0.00	0.00	0.00	0.00		15.20				
	2-Wire Trunk Side Unbundled Channelized DID Trunk Port			UEPPX	UEPDM	8.29	0.00	0.00	0.00	0.00		15.20				
Feature Activations - Unbundled Loop Concentration																

UNBUNDLED NETWORK ELEMENTS - Louisiana													Attachment: 2		Exhibit: B	
CATEGORY	RATE ELEMENTS	Interim	Zone	BCS	USOC	RATES($)					Svc Order Submitted Elec per LSR	Svc Order Submitted Manually per LSR	Incremental Charge - Manual Svc Order vs. Electronic-1st	Incremental Charge - Manual Svc Order vs. Electronic-Add'l	Incremental Charge - Manual Svc Order vs. Electronic-Disc 1st	Incremental Charge - Manual Svc Order vs. Electronic-Disc Add'l
						Rec	Nonrecurring		Nonrecurring Disconnect		OSS Rates($)					
							First	Add'l	First	Add'l	SOMEC	SOMAN	SOMAN	SOMAN	SOMAN	SOMAN
	Feature (Service) Activation for each Line Side Port Terminated in D4 Bank			UEPPX	1PQWM	0.6497	25.36	13.40				15.20				
	Feature (Service) Activation for each Trunk Side Port Terminated in D4 Bank			UEPPX	1PQWU	0.6497	78.05	18.40				15.20				
Telephone Number/ Group Establishment Charges for DID Service																
	DID Trunk Termination (1 per Port)			UEPPX	NDT	0.00	0.00	0.00				15.20				
	DID Numbers - groups of 20 - Valid all States			UEPPX	ND4	0.00	0.00	0.00				15.20				
	Non-Consecutive DID Numbers - per number			UEPPX	ND5	0.00	0.00	0.00				15.20				
	Reserve Non-Consecutive DID Numbers			UEPPX	ND6	0.00	0.00	0.00				15.20				
	Reserve DID Numbers			UEPPX	NDV	0.00	0.00	0.00				15.20				
Local Number Portability																
	Local Number Portability - 1 per port			UEPPX	LNPCP	3.15	0.00	0.00								
FEATURES - Vertical and Optional																
Local Switching Features Offered with Line Side Ports Only																
	All Features Available			UEPPX	UEPVF	0.00	0.00	0.00				15.20				
UNBUNDLED PORT LOOP COMBINATIONS - MARKET RATES																
Market Rates shall apply where BellSouth is not required to provide unbundled local switching or switch ports per FCC and/or State Commission rules.																
These scenarios include:																
1. Unbundled port/loop combinations that are Not Currently Combined in Alabama, Florida and North Carolina.																
2. Unbundled port/loop combinations that are Currently Combined or Not Currently Combined in Zone 1 of the Top 8 MSAS in BellSouth's region for end users with 4 or more DS0 equivalent lines.																
The Top 8 MSAs in BellSouth's region are: FL (Orlando, Ft. Lauderdale, Miami); GA (Atlanta); LA (New Orleans); NC (Greensboro-Winston Salem-Highpoint/Charlotte-Gastonia-Rock Hill); TN (Nashville).																
BellSouth currently is developing the billing capability to mechanically bill the recurring and non-recurring Market Rates in this section except for nonrecurring charges for not currently combined in AL, FL and NC. In the interim where BellSouth cannot bill Market Rates, BellSouth shall bill the rates in the Cost-Based section preceding in lieu of the Market Rates and reserves the right to true-up the billing difference.																
The Market Rate for unbundled ports includes all available features in all states.																
End Office and Tandem Switching Usage and Common Transport Usage rates in the Port section of this rate exhibit shall apply to all combinations of loop/port network elements except for UNE Coin Port/Loop Combinations which have a flat rate usage charge (USOC: URECU).																
For Not Currently Combined scenarios where Market Rates apply, the Nonrecurring charges are listed in the First and Additional NRC columns for each Port USOC. For Currently Combined scenarios, the Nonrecurring charges are listed in the NRC - Currently Combined section. Additional NRCs may apply also and are categorized accordingly.																
2-WIRE VOICE GRADE LOOP WITH 2-WIRE LINE PORT (RES)																
UNE Port/Loop Combination Rates																
	2-Wire VG Loop/Port Combo - Zone 1		1			25.77										
	2-Wire VG Loop/Port Combo - Zone 2		2			36.39										
	2-Wire VG Loop/Port Combo - Zone 3		3			62.26										
UNE Loop Rates																
	2-Wire Voice Grade Loop (SL1) - Zone 1		1	UEPRX	UEPLX	11.77										
	2-Wire Voice Grade Loop (SL1) - Zone 2		2	UEPRX	UEPLX	22.39										
	2-Wire Voice Grade Loop (SL1) - Zone 3		3	UEPRX	UEPLX	48.26										
2-Wire Voice Grade Line Port (Res)																
	2-Wire voice unbundled port - residence			UEPRX	UEPRL	14.00	90.00	90.00					31.92	7.32		
	2-Wire voice unbundled port with Caller ID - res			UEPRX	UEPRC	14.00	90.00	90.00					31.92	7.32		
	2-Wire voice unbundled port outgoing only - res			UEPRX	UEPRO	14.00	90.00	90.00					31.92	7.32		
	2-Wire voice Grade unbundled Louisiana extended local dialing parity port with Caller ID - res			UEPRX	UEPAS	14.00	90.00	90.00					31.92	7.32		
	2-Wire voice unbundled Louisiana Area Plus with Caller ID - res (RUL)			UEPRX	UEPAG	14.00	90.00	90.00					31.92	7.32		
	2-Wire voice unbundled Louisiana Area Plus with Caller ID - res (AC7)			UEPRX	UEPAH	14.00	90.00	90.00					31.92	7.32		
	2-Wire voice unbundles res, low usage line port with Caller ID (LUM)			UEPRX	UEPAP	14.00	90.00	90.00					31.92	7.32		
LOCAL NUMBER PORTABILITY																
	Local Number Portability (1 per port)			UEPRX	LNPCX	0.35										
FEATURES																
	All Features Offered			UEPRX	UEPVF	0.00	0.00	0.00					31.92	7.32		
NONRECURRING CHARGES - CURRENTLY COMBINED																
	2-Wire Voice Grade Loop / Line Port Combination - Switch-as-is			UEPRX	USAC2		41.50	41.50					31.92	7.32		
	2-Wire Voice Grade Loop / Line Port Combination - Switch with change			UEPRX	USACC		41.50	41.50					31.92	7.32		
ADDITIONAL NRCs																

UNBUNDLED NETWORK ELEMENTS - Louisiana													Attachment: 2		Exhibit: B	
CATEGORY	RATE ELEMENTS	Interim	Zone	BCS	USOC	RATES($)					Svc Order Submitted Elec per LSR	Svc Order Submitted Manually per LSR	Incremental Charge - Manual Svc Order vs. Electronic-1st	Incremental Charge - Manual Svc Order vs. Electronic-Add'l	Incremental Charge - Manual Svc Order vs. Electronic-Disc 1st	Incremental Charge - Manual Svc Order vs. Electronic-Disc Add'l
						Rec	Nonrecurring		Nonrecurring Disconnect		OSS Rates($)					
							First	Add'l	First	Add'l	SOMEC	SOMAN	SOMAN	SOMAN	SOMAN	SOMAN
	NRC - 2-Wire Voice Grade Loop/Line Port Combination - Subsequent			UEPRX	USAS2		0.00	0.00					31.92	7.32		
2-WIRE VOICE GRADE LOOP WITH 2-WIRE LINE PORT (BUS)																
UNE Port/Loop Combination Rates																
	2-Wire VG Loop/Port Combo - Zone 1		1			25.77										
	2-Wire VG Loop/Port Combo - Zone 2		2			36.39										
	2-Wire VG Loop/Port Combo - Zone 3		3			62.26										
UNE Loop Rates																
	2-Wire Voice Grade Loop (SL1) - Zone 1		1	UEPBX	UEPLX	11.77										
	2-Wire Voice Grade Loop (SL1) - Zone 2		2	UEPBX	UEPLX	22.39										
	2-Wire Voice Grade Loop (SL1) - Zone 3		3	UEPBX	UEPLX	48.26										
2-Wire Voice Grade Line Port (Bus)																
	2-Wire voice unbundled port without Caller ID - bus			UEPBX	UEPBL	14.00	90.00	90.00					31.92	7.32		
	2-Wire voice unbundled port with Caller + E484 ID - bus			UEPBX	UEPBC	14.00	90.00	90.00					31.92	7.32		
	2-Wire voice unbundled port outgoing only - bus			UEPBX	UEPBO	14.00	90.00	90.00					31.92	7.32		
	2-Wire voice Grade unbundled Louisiana extended local dialing parity port with Caller ID - bus			UEPBX	UEPAX	14.00	90.00	90.00					31.92	7.32		
	2-Wire voice unbundled Louisiana Bus Area Calling Port with Caller ID (BUC)			UEPBX	UEPAA	14.00	90.00	90.00					31.92	7.32		
LOCAL NUMBER PORTABILITY																
	Local Number Portability (1 per port)			UEPBX	LNPCX	0.35										
NONRECURRING CHARGES - CURRENTLY COMBINED																
	2-Wire Voice Grade Loop / Line Port Combination - Switch-as-is			UEPBX	USAC2		41.50	41.50					31.92	7.32		
	2-Wire Voice Grade Loop / Line Port Combination - Switch with change			UEPBX	USACC		41.50	41.50					31.92	7.32		
ADDITIONAL NRCs																
	NRC - 2-Wire Voice Grade Loop/Line Port Combination - Subsequent			UEPBX	USAS2		0.00	0.00					31.92	7.32		
2-WIRE VOICE GRADE LOOP WITH 2-WIRE LINE PORT (RES - PBX)																
UNE Port/Loop Combination Rates																
	2-Wire VG Loop/Port Combo - Zone 1		1			25.77										
	2-Wire VG Loop/Port Combo - Zone 2		2			36.39										
	2-Wire VG Loop/Port Combo - Zone 3		3			62.26										
UNE Loop Rates																
	2-Wire Voice Grade Loop (SL1) - Zone 1		1	UEPRG	UEPLX	11.77										
	2-Wire Voice Grade Loop (SL1) - Zone 2		2	UEPRG	UEPLX	22.39										
	2-Wire Voice Grade Loop (SL1) - Zone 3		3	UEPRG	UEPLX	48.26										
2-Wire Voice Grade Line Port Rates (RES - PBX)																
	2-Wire VG Unbundled Combination 2-Way PBX Trunk Port - Res			UEPRG	UEPRD	14.00	90.00	90.00					31.92	7.32		
LOCAL NUMBER PORTABILITY																
	Local Number Portability (1 per port)			UEPRG	LNPCP	3.15										
NONRECURRING CHARGES - CURRENTLY COMBINED																
	2-Wire Voice Grade Loop/ Line Port Combination - Switch-As-Is			UEPRG	USAC2		41.50	41.50					31.92	7.32		
	2-Wire Voice Grade Loop/ Line Port Combination - Switch with Change			UEPRG	USACC		41.50	41.50					31.92	7.32		
ADDITIONAL NRCs																
	2 Wire Loop/Line Side Port Combination - Non feature - Subsequent Activity- Nonrecurring						0.00	0.00					31.92	7.32		
	PBX Subsequent Activity - Change/Rearrange Multiline Hunt Group						14.64	14.64					31.92	7.32		
2-WIRE VOICE GRADE LOOP WITH 2-WIRE LINE PORT (BUS - PBX)																
UNE Port/Loop Combination Rates																
	2-Wire VG Loop/Port Combo - Zone 1		1			25.77										
	2-Wire VG Loop/Port Combo - Zone 2		2			36.39										
	2-Wire VG Loop/Port Combo - Zone 3		3			62.26										
UNE Loop Rates																

UNBUNDLED NETWORK ELEMENTS - Louisiana													Attachment: 2		Exhibit: B	
CATEGORY	RATE ELEMENTS	Interim	Zone	BCS	USOC	RATES($)					Svc Order Submitted Elec per LSR	Svc Order Submitted Manually per LSR	Incremental Charge - Manual Svc Order vs. Electronic-1st	Incremental Charge - Manual Svc Order vs. Electronic-Add'l	Incremental Charge - Manual Svc Order vs. Electronic-Disc 1st	Incremental Charge - Manual Svc Order vs. Electronic-Disc Add'l
						Rec	Nonrecurring		Nonrecurring Disconnect		OSS Rates($)					
							First	Add'l	First	Add'l	SOMEC	SOMAN	SOMAN	SOMAN	SOMAN	SOMAN
	2-Wire Voice Grade Loop (SL1) - Zone 1		1	UEPPX	UEPLX	11.77										
	2-Wire Voice Grade Loop (SL1) - Zone 2		2	UEPPX	UEPLX	22.39										
	2-Wire Voice Grade Loop (SL1) - Zone 3		3	UEPPX	UEPLX	48.26										
2-Wire Voice Grade Line Port Rates (BUS - PBX)																
	Line Side Unbundled Combination 2-Way PBX Trunk Port - Bus			UEPPX	UEPPC	14.00	90.00	90.00					31.92	7.32		
	Line Side Unbundled Outward PBX Trunk Port - Bus			UEPPX	UEPPO	14.00	90.00	90.00					31.92	7.32		
	Line Side Unbundled Incoming PBX Trunk Port - Bus			UEPPX	UEPP1	14.00	90.00	90.00					31.92	7.32		
	2-Wire Voice Unbundled 2-Way Combination PBX Louisiana Calling Port			UEPPX	UEPL2	14.00							31.92	7.32		
	2-Wire Voice Unbundled PBX LD Terminal Ports			UEPPX	UEPLD	14.00	90.00	90.00					31.92	7.32		
	2-Wire Voice Unbundled 2-Way Combination PBX Usage Port			UEPPX	UEPXA	14.00	90.00	90.00					31.92	7.32		
	2-Wire Voice Unbundled PBX Toll Terminal Hotel Ports			UEPPX	UEPXB	14.00	90.00	90.00					31.92	7.32		
	2-Wire Voice Unbundled PBX LD DDD Terminals Port			UEPPX	UEPXC	14.00	90.00	90.00					31.92	7.32		
	2-Wire Voice Unbundled PBX LD Terminal Switchboard Port			UEPPX	UEPXD	14.00	90.00	90.00					31.92	7.32		
	2-Wire Voice Unbundled PBX LD Terminal Switchboard IDD Capable Port			UEPPX	UEPXE	14.00	90.00	90.00					31.92	7.32		
	2-Wire Voice Unbundled 2-Way PBX Louisiana Local Optional Calling Port			UEPPX	UEPXK	14.00	90.00	90.00					31.92	7.32		
	2-Wire Voice Unbundled 2-Way PBX Hotel/Hospital Economy Administrative Calling Port			UEPPX	UEPXL	14.00	90.00	90.00					31.92	7.32		
	2-Wire Voice Unbundled 2-Way PBX Hotel/Hospital Economy Room Calling Port			UEPPX	UEPXM	14.00	90.00	90.00					31.92	7.32		
	2-Wire Voice Unbundled 1-Way Outgoing PBX Hotel/Hospital Discount Room Calling Port			UEPPX	UEPXO	14.00	90.00	90.00					31.92	7.32		
	2-Wire Voice Unbundled 1-Way Outgoing PBX Louisiana Local Discount Calling Port			UEPPX	UEPXP	14.00	90.00	90.00					31.92	7.32		
	2-Wire Voice Unbundled 1-Way Outgoing PBX Measured Port			UEPPX	UEPXS	14.00	90.00	90.00					31.92	7.32		
LOCAL NUMBER PORTABILITY																
	Local Number Portability (1 per port)			UEPPX	LNPCP	3.15	0.00	0.00								
FEATURES																
	All Features Offered			UEPPX	UEPVF	0.00	0.00	0.00					31.92	7.32		
NONRECURRING CHARGES - CURRENTLY COMBINED																
	2-Wire Voice Grade Loop/ Line Port Combination - Switch-As-Is			UEPPX	USAC2		41.50	41.50					31.92	7.32		
	2-Wire Voice Grade Loop/ Line Port Combination - Switch with Change			UEPPX	USACC		41.50	41.50					31.92	7.32		
ADDITIONAL NRCs																
	2-Wire Voice Grade Loop/ Line Port Combination - Subsequent			UEPPX	USAS2		0.00	0.00					31.92	7.32		
	2 Wire Loop/Line Side Port Combination - Non feature - Subsequent Activity- Nonrecurring						0.00	0.00					31.92	7.32		
	PBX Subsequent Activity - Change/Rearrange Multiline Hunt Group						14.64	14.64					31.92	7.32		
2-WIRE VOICE GRADE LOOP WITH 2-WIRE ANALOG LINE COIN PORT																
UNE Port/Loop Combination Rates																
	2-Wire VG Coin Port/Loop Combo – Zone 1		1			25.77										
	2-Wire VG Coin Port/Loop Combo – Zone 2		2			36.39										
	2-Wire VG Coin Port/Loop Combo – Zone 3		3			62.26										
UNE Loop Rates																
	2-Wire Voice Grade Loop (SL1) - Zone 1		1	UEPCO	UEPLX	11.77										
	2-Wire Voice Grade Loop (SL1) - Zone 2		2	UEPCO	UEPLX	22.39										
	2-Wire Voice Grade Loop (SL1) - Zone 3		3	UEPCO	UEPLX	48.26										
2-Wire Voice Grade Line Port Rates (Coin)																
	2-Wire Coin 2-Way without Operator Screening and without Blocking (AL, KY, LA, MS)			UEPCO	UEPRF	14.00	90.00	90.00					31.92	7.32		
	2-Wire Coin 2-Way with Operator Screening and Blocking: 011, 900/976, 1+DDD (AL, KY, LA, MS, SC)			UEPCO	UEPRA	14.00	90.00	90.00					31.92	7.32		

CATEGORY	RATE ELEMENTS	Interim	Zone	BCS	USOC	RATES($) Rec	Nonrecurring First	Nonrecurring Add'l	Nonrecurring Disconnect First	Nonrecurring Disconnect Add'l	Svc Order Submitted Elec per LSR	Svc Order Submitted Manually per LSR	Incremental Charge - Manual Svc Order vs. Electronic- 1st	Incremental Charge - Manual Svc Order vs. Electronic- Add'l	Incremental Charge - Manual Svc Order vs. Electronic- Disc 1st	Incremental Charge - Manual Svc Order vs. Electronic- Disc Add'l
											OSS Rates($)					
											SOMEC	SOMAN	SOMAN	SOMAN	SOMAN	SOMAN
	2-Wire Coin 2-Way with Operator Screening and 011 Blocking (AL, LA, MS)			UEPCO	UEPRB	14.00	90.00	90.00					31.92	7.32		
	2-Wire Coin 2-Way with Operator Screening & Blocking: 900/976, 1+DDD, 011+, & Local (AL, KY, LA, MS)			UEPCO	UEPCD	14.00	90.00	90.00					31.92	7.32		
	2-Wire Coin Outward without Blocking and without Operator Screening (KY, LA, MS)			UEPCO	UEPRN	14.00	90.00	90.00					31.92	7.32		
	2-Wire Coin Outward with Operator Screening and 011 Blocking (LA)			UEPCO	UEPLA	14.00	90.00	90.00					31.92	7.32		
	2-Wire Coin Outward with Operator Screening and Blocking: 011, 900/976, 1+DDD (AL, KY, LA, MS)			UEPCO	UEPRH	14.00	90.00	90.00					31.92	7.32		
	2-Wire Coin Outward Operator Screening & Blocking: 900/976, 1+DDD, 011+, & Local (AL, KY, LA, MS)			UEPCO	UEPCN	14.00	90.00	90.00					31.92	7.32		
LOCAL NUMBER PORTABILITY																
	Local Number Portability (1 per port)			UEPCO	LNPCX	0.35										
NONRECURRING CHARGES - CURRENTLY COMBINED																
	2-Wire Voice Grade Loop/ Line Port Combination - Switch-As-Is			UEPCO	USAC2		41.50	41.50					31.92	7.32		
	2-Wire Voice Grade Loop/ Line Port Combination - Switch with Change			UEPCO	USACC		41.50	41.50					31.92	7.32		
ADDITIONAL NRCs																
	2-Wire Voice Grade Loop/ Line Port Combination - Subsequent			UEPCO	USAS2		0.00	0.00					31.92	7.32		
UNBUNDLED PORT/LOOP COMBINATIONS - MARKET BASED RATES																
2-WIRE VOICE GRADE LOOP- BUS ONLY - WITH 2-WIRE DID TRUNK PORT																
UNE Port/Loop Combination Rates																
	2-Wire VG Loop/2-Wire DID Trunk Port Combo - UNE Zone 1		1			50.93										
	2-Wire VG Loop/2-Wire DID Trunk Port Combo - UNE Zone 2		2			61.35										
	2-Wire VG Loop/2-Wire DID Trunk Port Combo - UNE Zone 3		3			86.46										
UNE Loop Rates																
	2-Wire Analog Voice Grade Loop - (SL2) - UNE Zone 1		1	UEPPX	UECD1	14.93						15.20				
	2-Wire Analog Voice Grade Loop - (SL2) - UNE Zone 2		2	UEPPX	UECD1	25.35						15.20				
	2-Wire Analog Voice Grade Loop - (SL2) - UNE Zone 3		3	UEPPX	UECD1	50.46						15.20				
UNE Port Rate																
	Exchange Ports - 2-Wire DID Port			UEPPX	UEPD1	36.00	600.00	45.00				15.20				
NONRECURRING CHARGES - CURRENTLY COMBINED																
	2-Wire Voice Grade Loop / 2-Wire DID Trunk Port Combination - Switch-As-Is Top 8 MSAs only			UEPPX	USAC1		100.00	42.50				15.20				
	2-Wire Voice Grade Loop / 2-Wire DID Trunk Port Conversion with BellSouth Allowable Changes Top 8 MSAs only			UEPPX	USA1C		100.00	42.50				15.20				
ADDITIONAL NRCs																
	2-Wire DID Subsequent Activity - Add Trunks, Per Trunk			UEPPX	USAS1		45.00	45.00				15.20				
Telephone Number/Trunk Group Establisment Charges																
	DID Trunk Termination (One Per Port)			UEPPX	NDT	0.00	0.00	0.00				15.20				
	Additional DID Numbers for each Group of 20 DID Numbers			UEPPX	ND4	0.00	0.00	0.00				15.20				
	DID Numbers, Non- consecutive DID Numbers , Per Number			UEPPX	ND5	0.00	0.00	0.00				15.20				
	Reserve Non-Consecutive DID numbers			UEPPX	ND6	0.00	0.00	0.00				15.20				
	Reserve DID Numbers			UEPPX	NDV	0.00	0.00	0.00				15.20				
LOCAL NUMBER PORTABILITY																
	Local Number Portability (1 per port)			UEPPX	LNPCP	3.15	0.00	0.00								
2-WIRE ISDN DIGITAL GRADE LOOP WITH 2-WIRE ISDN DIGITAL LINE SIDE PORT																
UNE Port/Loop Combination Rates																
	2W ISDN Digital Grade Loop/2W ISDN Digital Line Side Port - UNE Zone 1		1	UEPPB UEPPR		84.09										
	2W ISDN Digital Grade Loop/2W ISDN Digital Line Side Port - UNE Zone 2		2	UEPPB UEPPR		96.95										
	2W ISDN Digital Grade Loop/2W ISDN Digital Line Side Port - UNE Zone 3		3	UEPPB UEPPR		127.60										
UNE Loop Rates																
	2-Wire ISDN Digital Grade Loop - UNE Zone 1		1	UEPPB UEPPR	USL2X	19.09						15.20				

CATEGORY	RATE ELEMENTS	Interim	Zone	BCS	USOC	RATES($) Rec	Nonrecurring First	Nonrecurring Add'l	Nonrecurring Disconnect First	Nonrecurring Disconnect Add'l	Svc Order Submitted Elec per LSR	Svc Order Submitted Manually per LSR	Incremental Charge - Manual Svc Order vs. Electronic-1st	Incremental Charge - Manual Svc Order vs. Electronic-Add'l	Incremental Charge - Manual Svc Order vs. Electronic-Disc 1st	Incremental Charge - Manual Svc Order vs. Electronic-Disc Add'l
											OSS Rates($)					
											SOMEC	SOMAN	SOMAN	SOMAN	SOMAN	SOMAN
	2-Wire ISDN Digital Grade Loop - UNE Zone 2		2	UEPPB UEPPR	USL2X	31.95						15.20				
	2-Wire ISDN Digital Grade Loop - UNE Zone 3		3	UEPPB UEPPR	USL2X	62.60						15.20				
UNE Port Rate																
	Exchange Port - 2-Wire ISDN Line Side Port			UEPPB UEPPR	UEPPB	65.00	525.00	400.00				15.20				
NONRECURRING CHARGES - CURRENTLY COMBINED																
	2-Wire ISDN Digital Grade Loop / 2-Wire ISDN Line Side Port Combination - Conversion - Top 8 MSAs only			UEPPB UEPPR	USACB	0.00	230.00	230.00				15.20				
ADDITIONAL NRCs																
LOCAL NUMBER PORTABILITY																
	Local Number Portability (1 per port)			UEPPB UEPPR	LNPCX	0.35	0.00	0.00								
B-CHANNEL USER PROFILE ACCESS:																
	CVS/CSD (DMS/5ESS)			UEPPB UEPPR	U1UCA	0.00	0.00	0.00								
	CVS (EWSD)			UEPPB UEPPR	U1UCB	0.00	0.00	0.00								
	CSD			UEPPB UEPPR	U1UCC	0.00	0.00	0.00								
B-CHANNEL AREA PLUS USER PROFILE ACCESS: (AL,KY,LA,MS SC,MS, & TN)																
	CVS/CSD (DMS/5ESS)			UEPPB UEPPR	U1UCD	0.00	0.00	0.00								
	CVS (EWSD)			UEPPB UEPPR	U1UCE	0.00	0.00	0.00								
	CSD			UEPPB UEPPR	U1UCF	0.00	0.00	0.00								
USER TERMINAL PROFILE																
	User Terminal Profile (EWSD only)			UEPPB UEPPR	U1UMA	0.00	0.00	0.00								
VERTICAL FEATURES																
	All Vertical Features - One per Channel B User Profile			UEPPB UEPPR	UEPVF	0.00	0.00	0.00				15.20				
INTEROFFICE CHANNEL MILEAGE																
	Interoffice Channel mileage each, including first mile and facilities termination			UEPPB UEPPR	M1GNC	22.613	39.36	26.62				15.20				
	Interoffice Channel mileage each, additional mile			UEPPB UEPPR	M1GNM	0.013	0.00	0.00				15.20				
4-WIRE DS1 DIGITAL LOOP WITH 4-WIRE ISDN DS1 DIGITAL TRUNK PORT																
UNE Port/Loop Combination Rates																
	4W DS1 Digital Loop/4W ISDN DS1 Digital Trunk Port - UNE Zone 1		1	UEPPP		935.70										
	4W DS1 Digital Loop/4W ISDN DS1 Digital Trunk Port - UNE Zone 2		2	UEPPP		1,044.96										
	4W DS1 Digital Loop/4W ISDN DS1 Digital Trunk Port - UNE Zone 3		3	UEPPP		1,341.94										
UNE Loop Rates																
	4-Wire DS1 Digital Loop - UNE Zone 1		1	UEPPP	USL4P	85.70						15.20				
	4-Wire DS1 Digital Loop - UNE Zone 2		2	UEPPP	USL4P	194.96						15.20				
	4-Wire DS1 Digital Loop - UNE Zone 3		3	UEPPP	USL4P	491.94						15.20				
UNE Port Rate																
	Exchange Ports - 4-Wire ISDN DS1 Port			UEPPP	UEPPP	850.00	1,150.00	1,150.00				15.20				
NONRECURRING CHARGES - CURRENTLY COMBINED																
	4-Wire DS1 Digital Loop / 4-Wire ISDN DS1 Digital Trunk Port Combination - Conversion -Switch-As-Is Top 8 MSAs only			UEPPP	USACP	0.00	950.00	950.00				15.20				
ADDITIONAL NRCs																
	4-Wire DS1 Loop/4-W ISDN Digtl Trk Port - Subsqt Actvy-Inward/two way tel nos within Std Allowance (except NC)			UEPPP	PR7TF		0.48					15.20				
	4-Wire DS1 Loop / 4-Wire ISDN DS1 Digital Trunk Port - Outward Tel Numbers (All States except NC)			UEPPP	PR7TO		11.18	11.18				15.20				
	4-Wire DS1 Loop / 4-Wire ISDN DS1 Digital Trk Port - Subsequent Inward Tel Nos Above Std Allowance			UEPPP	PR7ZT		22.35	22.35				15.20				
LOCAL NUMBER PORTABILITY																
	Local Number Portability (1 per port)			UEPPP	LNPCN	1.75										
INTERFACE (Provsioning Only)																
	Voice/Data			UEPPP	PR71V	0.00	0.00	0.00								
	Digital Data			UEPPP	PR71D	0.00	0.00	0.00								
	Inward Data			UEPPP	PR71E	0.00	0.00	0.00								
New or Additional "B" Channel																
	New or Additional - Voice/Data B Channel			UEPPP	PR7BV	0.00	14.11					15.20				

CATEGORY	RATE ELEMENTS	Interim	Zone	BCS	USOC	RATES($) Rec	Nonrecurring First	Nonrecurring Add'l	Nonrecurring Disconnect First	Nonrecurring Disconnect Add'l	Svc Order Submitted Elec per LSR	Svc Order Submitted Manually per LSR	OSS Rates($) Incremental Charge - Manual Svc Order vs. Electronic-1st	Incremental Charge - Manual Svc Order vs. Electronic-Add'l	Incremental Charge - Manual Svc Order vs. Electronic-Disc 1st	Incremental Charge - Manual Svc Order vs. Electronic-Disc Add'l
											SOMEC	SOMAN	SOMAN	SOMAN	SOMAN	SOMAN
	New or Additional - Digital Data B Channel			UEPPP	PR7BF	0.00	14.11					15.20				
	New or Additional Inward Data B Channel			UEPPP	PR7BD	0.00	14.11					15.20				
CALL TYPES																
	Inward			UEPPP	PR7C1	0.00	0.00	0.00								
	Outward			UEPPP	PR7C0	0.00	0.00	0.00								
	Two-way			UEPPP	PR7CC	0.00	0.00	0.00								
Interoffice Channel Mileage																
	Fixed Each Including First Mile			UEPPP	1LN1A	70.7532	86.69	79.44				15.20				
	Each Airline-Fractional Additional Mile			UEPPP	1LN1B	0.2652										
4-WIRE DS1 DIGITAL LOOP WITH 4-WIRE DDITS TRUNK PORT																
UNE Port/Loop Combination Rates																
	4W DS1 Digital Loop/4W DDITS Trunk Port - Statewide		sw	UEPDC												
	4W DS1 Digital Loop/4W DDITS Trunk Port - UNE Zone 1		1	UEPDC		154.17						15.20				
	4W DS1 Digital Loop/4W DDITS Trunk Port - UNE Zone 2		2	UEPDC		263.43						15.20				
	4W DS1 Digital Loop/4W DDITS Trunk Port - UNE Zone 3		3	UEPDC		560.41						15.20				
	4W DS1 Digital Loop/4W DDITS Trunk Port - UNE Zone 4		4	UEPDC												
UNE Loop Rates																
	4-Wire DS1 Digital Loop - Statewide		sw	UEPDC	USLDC											
	4-Wire DS1 Digital Loop - UNE Zone 1		1	UEPDC	USLDC	85.70						15.20				
	4-Wire DS1 Digital Loop - UNE Zone 2		2	UEPDC	USLDC	194.96						15.20				
	4-Wire DS1 Digital Loop - UNE Zone 3		3	UEPDC	USLDC	491.94						15.20				
	4-Wire DS1 Digital Loop - UNE Zone 4		4	UEPDC	USLDC											
UNE Port Rate																
	4-Wire DDITS Digital Trunk Port			UEPDC	UDD1T	750.00	1,006.28	479.28	0.00	0.00		15.20				
NONRECURRING CHARGES - CURRENTLY COMBINED																
	4-Wire DS1 Digital Loop / 4-Wire DDITS Trunk Port Combination - Switch-As-Is Top 8 MSAs only			UEPDC	USAC4		125.75	65.08				15.20				
	4-Wire DS1 Digital Loop / 4-Wire DDITS Trunk Port Combination - Conversion with DS1 Changes Top 8 MSAs only			UEPDC	USAWA		125.75	65.08				15.20				
	4-Wire DS1 Digital Loop / 4-Wire DDITS Trunk Port Combination - Conversion with Change - Trunk Top 8 MSAs only			UEPDC	USAWB		125.75	65.08				15.20				
ADDITIONAL NRCs																
	4-Wire DS1 Loop / 4-Wire DDITS Trunk Port - Subsequent Service Activity Per Service Order			UEPDC	USAS4											
	4-Wire DS1 Loop / 4-Wire DDITS Trunk Port - NRC - Subsequent Channel Activation/Chan - 2-Way Trunk			UEPDC	UDTTA		14.06	14.06				15.20				
	4-Wire DS1 Loop / 4-Wire DDITS Trunk Port - Subsequent Channel Activation/Chan - 1-Way Outward Trunk			UEPDC	UDTTB		14.06	14.06				15.20				
	4-Wire DS1 Loop / 4-Wire DDITS Trunk Port - Subsqnt Channel Activation/Chan Inward Trunk w/out DID			UEPDC	UDTTC		14.06	14.06				15.20				
	4-Wire DS1 Loop / 4-Wire DDITS Trunk Port - Subsqnt Chan Activation Per Chan - Inward Trunk with DID			UEPDC	UDTTD		14.06	14.06				15.20				
	4-Wire DS1 Loop / 4-Wire DDITS Trunk Port - Subsqnt Chan Activation / Chan - 2-Way DID w User Trans			UEPDC	UDTTE		14.06	14.06				15.20				
BIPOLAR 8 ZERO SUBSTITUTION																
	B8ZS -Superframe Format			UEPDC	CCOSF		0.00	605.00				15.20				
	B8ZS - Extended Superframe Format			UEPDC	CCOEF		0.00	605.00				15.20				
Alternate Mark Inversion																
	AMI -Superframe Format			UEPDC	MCOSF		0.00	0.00								
	AMI - Extended SuperFrame Format			UEPDC	MCOPO		0.00	0.00								
Telephone Number/Trunk Group Establisment Charges																
	Telephone Number for 2-Way Trunk Group			UEPDC	UDTGX	0.00						15.20				
	Telephone Number for 1-Way Outward Trunk Group			UEPDC	UDTGY	0.00						15.20				
	Telephone Number for 1-Way Inward Trunk Group Without DID			UEPDC	UDTGZ	0.00						15.20				
	DID Numbers, Establish Trunk Group and Provide First Group of 20 DID Numbers			UEPDC	NDZ	0.00	0.00	0.00				15.20				
	DID Numbers for each Group of 20 DID Numbers			UEPDC	ND4	0.00						15.20				

CATEGORY	RATE ELEMENTS	Interim	Zone	BCS	USOC	RATES($) Rec	Nonrecurring First	Nonrecurring Add'l	Nonrecurring Disconnect First	Nonrecurring Disconnect Add'l	Svc Order Submitted Elec per LSR	Svc Order Submitted Manually per LSR	Incremental Charge - Manual Svc Order vs. Electronic-1st	Incremental Charge - Manual Svc Order vs. Electronic-Add'l	Incremental Charge - Manual Svc Order vs. Electronic-Disc 1st	Incremental Charge - Manual Svc Order vs. Electronic-Disc Add'l
											OSS Rates($)					
											SOMEC	SOMAN	SOMAN	SOMAN	SOMAN	SOMAN
	DID Numbers, Non- consecutive DID Numbers , Per Number			UEPDC	ND5	0.00						15.20				
	Reserve Non-Consecutive DID Nos.			UEPDC	ND6	0.00	0.00	0.00				15.20				
	Reserve DID Numbers			UEPDC	NDV	0.00	0.00	0.00				15.20				
Dedicated DS1 (Interoffice Channel Mileage) -																
FX/FCO for 4-Wire DS1 Digital Loop with 4-Wire DDITS Trunk Port																
	Interoffice Channel Mileage - Fixed rate 0-8 miles (Facilities Termination)			UEPDC	1LNO1	70.47	86.69	79.44				15.20				
	Interoffice Channel Mileage - Additional rate per mile - 0-8 miles			UEPDC	1LNOA	0.2652	0.00	0.00								
	Interoffice Channel Mileage - Fixed rate 9-25 miles (Facilities Termination)			UEPDC	1LNO2	0.00	0.00	0.00								
	Interoffice Channel Mileage - Additional rate per mile - 9-25 miles			UEPDC	1LNOB	0.2652	0.00	0.00								
	Interoffice Channel Mileage - Fixed rate 25+ miles (Facilities Termination)			UEPDC	1LNO3	0.00	0.00	0.00								
	Interoffice Channel Mileage - Additional rate per mile - 25+ miles			UEPDC	1LNOC	0.2652	0.00	0.00								
	Local Number Portability, per DS0 Activated			UEPDC	LNPCP	3.15	0.00	0.00								
	Central Office Termininating Point			UEPDC	CTG	0.00										
4-WIRE DS1 LOOP WITH CHANNELIZATION WITH PORT																
System is 1 DS1 Loop, 1 D4 Channel Bank, and up to 24 Feature Activations																
A system can have various rate combinations based on type and number of ports used																
UNE DS1 Loop																
	4-Wire DS1 Loop - UNE Zone 1		1	UEPMG	USLDC	85.70	0.00	0.00				15.20				
	4-Wire DS1 Loop - UNE Zone 2		2	UEPMG	USLDC	194.96	0.00	0.00				15.20				
	4-Wire DS1 Loop - UNE Zone 3		3	UEPMG	USLDC	491.94	0.00	0.00				15.20				
UNE DSO Channelization Capacities (D4 Channel Bank Configurations)																
	24 DSO Channel Capacity - 1 per DS1			UEPMG	VUM24	97.35	0.00	0.00				15.20				
	48 DSO Channel Capacity - 1 per 2 DS1s			UEPMG	VUM48	194.70	0.00	0.00				15.20				
	96 DSO Channel Capacity -1per 4 DS1s			UEPMG	VUM96	389.40	0.00	0.00				15.20				
	144 DS0 Channel Capacity - 1 per 6 DS1s			UEPMG	VUM14	584.10	0.00	0.00				15.20				
	192 DS0 Channel Capacity -1 per 8 DS1s			UEPMG	VUM19	778.80	0.00	0.00				15.20				
	240 DS0 Channel Capacity - 1 per 10 DS1s			UEPMG	VUM20	973.50	0.00	0.00				15.20				
	288 DS0 Channel Capacity - 1 per 12 DS1s			UEPMG	VUM28	1,168.20	0.00	0.00				15.20				
	384 DS0 Channel Capacity - 1 per 16 DS1s			UEPMG	VUM38	1,557.60	0.00	0.00				15.20				
	480 DS0 Channel Capacity - 1 per 20 DS1s			UEPMG	VUM40	1,947.00	0.00	0.00				15.20				
	576 DS0 Channel Capacity -1 per 24 DS1s			UEPMG	VUM57	2,336.40	0.00	0.00				15.20				
	672 DS0 Channel Capacity - 1 per 28 DS1s			UEPMG	VUM67	2,725.80	0.00	0.00				15.20				
Non-Recurring Charges (NRC) Associated with 4-Wire DS1 Loop with Channeliztion with Port - Conversion Charge Based on a System																
A Minimum System configuration is One (1) DS1, One (1) D4 Channel Bank, and Up To 24 DSO Ports with Feature Activations.																
Multiples of this configuration functioning as one are considered Add'l after the minimum system configuration is counted.																
	NRC - Conversion (Currently Combined) with or without BellSouth Allowed Changes - Top 8 MSAs Only			UEPMG	USAC4	0.00	450.00	50.00				15.20				
System Additions Where Currently Combined and New (Not Currently Combined)																
In Top 8 MSAs and AL, FL, and NC Only																
	1 DS1/D4 Channel Bank - Add NRC for each Port and Assoc Fea Activation -			UEPMG	VUMD4	0.00	900.00	600.00				15.20				
Bipolar 8 Zero Substitution																
	Clear Channel Capability Format, superframe - Subsequent Activity Only			UEPMG	CCOSF	0.00	0.00	605.00				15.20				
	Clear Channel Capability Format - Extended Superframe - Subsequent Activity Only			UEPMG	CCOEF	0.00	0.00	605.00				15.20				
Alternate Mark Inversion (AMI)																
	Superframe Format			UEPMG	MCOSF	0.00	0.00	0.00								
	Extended Superframe Format			UEPMG	MCOPO	0.00	0.00	0.00								
Exchange Ports Associated with 4-Wire DS1 Loop with Channelization with Port																
Exchange Ports																
	Line Side Combination Channelized PBX Trunk Port - Business			UEPPX	UEPCX	14.00	0.00	0.00				15.20				

CATEGORY	RATE ELEMENTS	Interim	Zone	BCS	USOC	RATES($)					Svc Order Submitted Elec per LSR	Svc Order Submitted Manually per LSR	Incremental Charge - Manual Svc Order vs. Electronic-1st	Incremental Charge - Manual Svc Order vs. Electronic-Add'l	Incremental Charge - Manual Svc Order vs. Electronic-Disc 1st	Incremental Charge - Manual Svc Order vs. Electronic-Disc Add'l
						Rec	Nonrecurring		Nonrecurring Disconnect		OSS Rates($)					
							First	Add'l	First	Add'l	SOMEC	SOMAN	SOMAN	SOMAN	SOMAN	SOMAN
	Line Side Outward Channelized PBX Trunk Port - Business			UEPPX	UEPOX	14.00	0.00	0.00				15.20				
	Line Side Inward Only Channelized PBX Trunk Port without DID			UEPPX	UEP1X	14.00	0.00	0.00				15.20				
	2-Wire Trunk Side Unbundled Channelized DID Trunk Port			UEPPX	UEPDM	36.00	0.00	0.00				15.20				
	Feature Activations - Unbundled Loop Concentration															
	Feature (Service) Activation for each Line Side Port Terminated in D4 Bank			UEPPX	1PQWM	0.6497	40.00	20.00				15.20				
	Feature (Service) Activation for each Trunk Side Port Terminated in D4 Bank			UEPPX	1PQWU	0.6497	110.00	30.00				15.20				
	Telephone Number/ Group Establishment Charges for DID Service															
	DID Trunk Termination (1 per Port)			UEPPX	NDT	0.00	0.00	0.00				15.20				
	DID Numbers - groups of 20 - Valid all States			UEPPX	ND4	0.00	0.00	0.00				15.20				
	Non-Consecutive DID Numbers - per number			UEPPX	ND5	0.00	0.00	0.00				15.20				
	Reserve Non-Consecutive DID Numbers			UEPPX	ND6	0.00	0.00	0.00				15.20				
	Reserve DID Numbers			UEPPX	NDV	0.00	0.00	0.00				15.20				
	Local Number Portability															
	Local Number Portability - 1 per port			UEPPX	LNPCP	3.15	0.00	0.00								
	FEATURES - Vertical and Optional															
	Local Switching Features Offered with Line Side Ports Only															
	All Features Available			UEPPX	UEPVF	0.00	0.00	0.00				15.20				
UNBUNDLED CENTREX PORT/LOOP COMBINATIONS - COST BASED RATES																
	1. Cost Based Rates are applied where BellSouth is required by FCC and/or State Commission rule to provide Unbundled Local Switching or Switch Ports.															
	2. Features shall apply to the Unbundled Port/Loop Combination - Cost Based Rate section in the same manner as they are applied to the Stand-Alone Unbundled Port section of this Rate Exhibit.															
	3. End Office and Tandem Switching Usage and Common Transport Usage rates in the Port section of this rate exhibit shall apply to all combinations of loop/port network elements except for UNE Coin Port/Loop Combinations.															
	For Georgia, Kentucky, Louisiana, MIssissippi and Tennessee, the recurring UNE Port and Loop charges listed apply to Currently Combined and Not Currently Combined Combos. The the first and additional Port nonrecurring charges apply to Not Currently Combined Combos for all states. In GA, KY, LA, MS and TN these nonrecurring charges are commission ordered cost based rates and in AL, FL, NC and SC these nonrecurring charges are Market Rates and are listed in the Market Rate section. For Currently Combined Combos in all other states, the nonrecurring charges shall be those identified in the Nonrecurring - Currently Combined sections.															
	5. Market Rates for Unbundled Centrex Port/Loop Combination will be negotiated on an Individual Case Basis, until further notice.															
	UNE-P CENTREX - 1AESS - (Valid in AL,FL,GA,KY,LA,MS,&TN only)															
	2-Wire VG Loop/2-Wire Voice Grade Port (Centrex) Combo															
	UNE Port/Loop Combination Rates (Non-Design)															
	2-Wire VG Loop/2-Wire Voice Grade Port (Centrex) Port Combo - Non-Design		1	UEP91		13.13										
	2-Wire VG Loop/2-Wire Voice Grade Port (Centrex)Port Combo - Non-Design		2	UEP91		23.75										
	2-Wire VG Loop/2-Wire Voice Grade Port (Centrex)Port Combo - Non-Design		3	UEP91		49.62										
	UNE Port/Loop Combination Rates (Design)															
	2-Wire VG Loop/2-Wire Voice Grade Port (Centrex) Port Combo - Design		1	UEP91		16.29										
	2-Wire VG Loop/2-Wire Voice Grade Port (Centrex)Port Combo - Design		2	UEP91		26.71										
	2-Wire VG Loop/2-Wire Voice Grade Port (Centrex)Port Combo - Design		3	UEP91		48.26										
	UNE Loop Rate															
	2-Wire Voice Grade Loop (SL 1) - Zone 1		1	UEP91	UECS1	11.77										
	2-Wire Voice Grade Loop (SL 1) - Zone 2		2	UEP91	UECS1	22.39										
	2-Wire Voice Grade Loop (SL 1) - Zone 3		3	UEP91	UECS1	48.26										
	2-Wire Voice Grade Loop (SL 2) - Zone 1		1	UEP91	UECS2	14.93										
	2-Wire Voice Grade Loop (SL 2) - Zone 2		2	UEP91	UECS2	25.35										
	2-Wire Voice Grade Loop (SL 2) - Zone 3		3	UEP91	UECS2	50.46										
	UNE Ports															
	All States (Except North Carolina and Sout Carolina)															
	2-Wire Voice Grade Port (Centrex) Basic Local Area			UEP91	UEPYA	1.36	38.85	19.08				15.20				
	2-Wire Voice Grade Port (Centrex 800 termination)Basic Local Area			UEP91	UEPYB	1.36	38.85	19.08				15.20				
	2-Wire Voice Grade Port (Centrex with Caller ID)1Basic Local Area			UEP91	UEPYH	1.36	38.85	19.08				15.20				

CATEGORY	RATE ELEMENTS	Interim	Zone	BCS	USOC	RATES($) Rec	Nonrecurring First	Nonrecurring Add'l	Nonrecurring Disconnect First	Nonrecurring Disconnect Add'l	Svc Order Submitted Elec per LSR	Svc Order Submitted Manually per LSR	Incremental Charge - Manual Svc Order vs. Electronic-1st	Incremental Charge - Manual Svc Order vs. Electronic-Add'l	Incremental Charge - Manual Svc Order vs. Electronic-Disc 1st	Incremental Charge - Manual Svc Order vs. Electronic-Disc Add'l
											OSS Rates($)					
							First	Add'l	First	Add'l	SOMEC	SOMAN	SOMAN	SOMAN	SOMAN	SOMAN
	2-Wire Voice Grade Port (Centrex from diff Serving Wire Center)2 Basic Local Area			UEP91	UEPYM	1.36	104.41	67.93				15.20				
	2-Wire Voice Grade Port, Diff Serving Wire Center - 800 Service Term - Basic Local Area			UEP91	UEPYZ	1.36	104.41	67.93				15.20				
	2-Wire Voice Grade Port terminated in on Megalink or equivalent - Basic Local Area			UEP91	UEPY9	1.36	38.85	19.08				15.20				
	2-Wire Voice Grade Port Terminated on 800 Service Term - Basic Local Area			UEP91	UEPY2	1.36	38.85	19.08				15.20				
AL, KY, LA, MS, & TN Only																
	2-Wire Voice Grade Port (Centrex)			UEP91	UEPQA	1.36	38.85	19.08				15.20				
	2-Wire Voice Grade Port (Centrex 800 termination)			UEP91	UEPQB	1.36	38.85	19.08				15.20				
	2-Wire Voice Grade Port (Centrex with Caller ID)1			UEP91	UEPQH	1.36	38.85	19.08				15.20				
	2-Wire Voice Grade Port (Centrex from diff Serving Wire Center)2			UEP91	UEPQM	1.36	104.41	67.93				15.20				
	2-Wire Voice Grade Port, Diff Serving Wire Center - 800 Service Term			UEP91	UEPQZ	1.36	104.41	67.93				15.20				
	2-Wire Voice Grade Port terminated in on Megalink or equivalent			UEP91	UEPQ9	1.36	38.85	19.08				15.20				
	2-Wire Voice Grade Port Terminated on 800 Service Term			UEP91	UEPQ2	1.36	38.85	19.08				15.20				
Local Switching																
	Centrex Intercom Funtionality, per port			UEP91	URECS	0.8577										
Local Number Portability																
	Local Number Portability (1 per port)			UEP91	LNPCC	0.35										
Features																
	All Standard Features Offered, per port			UEP91	UEPVF	0.00										
	All Select Features Offered, per port			UEP91	UEPVS	0.00	412.25					15.20				
	All Centrex Control Features Offered, per port			UEP91	UEPVC	0.00										
NARS																
	Unbundled Network Access Register - Combination			UEP91	UARCX	0.00	0.00	0.00				15.20				
	Unbundled Network Access Register - Indial			UEP91	UAR1X	0.00	0.00	0.00				15.20				
	Unbundled Network Access Register - Outdial			UEP91	UAROX	0.00	0.00	0.00				15.20				
Miscellaneous Terminations																
2-Wire Trunk Side																
	Trunk Side Terminations, each			UEP91	CENA6	8.29	115.85	18.20				15.20				
Interoffice Channel Mileage - 2-Wire																
	Interoffice Channel Facilities Termination - Voice Grade			UEP91	MIGBC	22.60	39.36	26.62				15.20				
	Interoffice Channel mileage, per mile or fraction of mile			UEP91	MIGBM	0.13										
Feature Activations (DS0) Centrex Loops on Channelized DS1 Service																
D4 Channel Bank Feature Activations																
	Feature Activation on D-4 Channel Bank Centrex Loop Slot			UEP91	1PQWS	0.6497						15.20				
	Feature Activation on D-4 Channel Bank FX line Side Loop Slot			UEP91	1PQW6	0.6497						15.20				
	Feature Activation on D-4 Channel Bank FX Trunk Side Loop Slot			UEP91	1PQW7	0.6497						15.20				
	Feature Activation on D-4 Channel Bank Centrex Loop Slot - Different Wire Center			UEP91	1PQWP	0.6497						15.20				
	Feature Activation on D-4 Channel Bank Private Line Loop Slot			UEP91	1PQWV	0.6497						15.20				
	Feature Activation on D-4 Channel Bank Tjie Line/Trunk Loop Slot			UEP91	1PQWQ	0.6497						15.20				
	Feature Activation on D-4 Channel Bank WATS Loop Slot			UEP91	1PQWA	0.6497						15.20				
Non-Recurring Charges (NRC) Associated with UNE-P Centrex																
	Conversion - Currently Combined Switch-As-Is with allowed changes, per port			UEP91	USAC2		0.10	0.10				15.20				
	Conversion of Existing Centrex Common Block			UEP91	USACN	0.00	36.66	16.10								
	New Centrex Standard Common Block			UEP91	M1ACS	0.00	680.40					15.20				
	New Centrex Customized Common Block			UEP91	M1ACC	0.00	680.40					15.20				
	Secondary Block, per Block			UEP91	M2CC1	0.00	79.31					15.20				
	NAR Establishment Charge, Per Occasion			UEP91	URECA	0.00	73.93					15.20				

UNBUNDLED NETWORK ELEMENTS - Louisiana													Attachment: 2		Exhibit: B	
CATEGORY	RATE ELEMENTS	Interim	Zone	BCS	USOC	RATES($)					Svc Order Submitted Elec per LSR	Svc Order Submitted Manually per LSR	Incremental Charge - Manual Svc Order vs. Electronic-1st	Incremental Charge - Manual Svc Order vs. Electronic-Add'l	Incremental Charge - Manual Svc Order vs. Electronic-Disc 1st	Incremental Charge - Manual Svc Order vs. Electronic-Disc Add'l
						Rec	Nonrecurring		Nonrecurring Disconnect		OSS Rates($)					
							First	Add'l	First	Add'l	SOMEC	SOMAN	SOMAN	SOMAN	SOMAN	SOMAN
	UNE-P CENTREX - 5ESS (Valid in All States)															
	2-Wire VG Loop/2-Wire Voice Grade Port (Centrex) Combo															
	UNE Port/Loop Combination Rates (Non-Design)															
	2-Wire VG Loop/2-Wire Voice Grade Port (Centrex) Port Combo - Non-Design		1	UEP95		13.13										
	2-Wire VG Loop/2-Wire Voice Grade Port (Centrex)Port Combo - Non-Design		2	UEP95		23.75										
	2-Wire VG Loop/2-Wire Voice Grade Port (Centrex)Port Combo - Non-Design		3	UEP95		49.62										
	UNE Port/Loop Combination Rates (Design)															
	2-Wire VG Loop/2-Wire Voice Grade Port (Centrex) Port Combo - Design		1	UEP95		16.29										
	2-Wire VG Loop/2-Wire Voice Grade Port (Centrex)Port Combo - Design		2	UEP95		26.71										
	2-Wire VG Loop/2-Wire Voice Grade Port (Centrex)Port Combo - Design		3	UEP95		51.82										
	UNE Loop Rate															
	2-Wire Voice Grade Loop (SL 1) - Zone 1		1	UEP95	UECS1	11.77										
	2-Wire Voice Grade Loop (SL 1) - Zone 2		2	UEP95	UECS1	22.39										
	2-Wire Voice Grade Loop (SL 1) - Zone 3		3	UEP95	UECS1	48.26										
	2-Wire Voice Grade Loop (SL 2) - Zone 1		1	UEP95	UECS2	14.93										
	2-Wire Voice Grade Loop (SL 2) - Zone 2		2	UEP95	UECS2	25.35										
	2-Wire Voice Grade Loop (SL 2) - Zone 3		3	UEP95	UECS2	50.46										
	UNE Port Rate															
	All States															
	2-Wire Voice Grade Port (Centrex) Basic Local Area			UEP95	UEPYA	1.36	38.85	19.08				15.20				
	2-Wire Voice Grade Port (Centrex 800 termination)			UEP95	UEPYB	1.36	38.85	19.08				15.20				
	2-Wire Voice Grade Port (Centrex with Caller ID)1Basic Local Area			UEP95	UEPYH	1.36	38.85	19.08				15.20				
	2-Wire Voice Grade Port (Centrex from diff Serving Wire Center)2 Basic Local Area			UEP95	UEPYM	1.36	104.41	67.93				15.20				
	2-Wire Voice Grade Port, Diff Serving Wire Center - 800 Service Term - Basic Local Area			UEP95	UEPYZ	1.36	104.41	67.93				15.20				
	2-Wire Voice Grade Port terminated in on Megalink or equivalent - Basic Local Area			UEP95	UEPY9	1.36	38.85	19.08				15.20				
	2-Wire Voice Grade Port Terminated on 800 Service Term - Basic Local Area			UEP95	UEPY2	1.36	38.85	19.08				15.20				
	AL, KY, LA, MS, SC, & TN Only															
	2-Wire Voice Grade Port (Centrex)			UEP95	UEPQA	1.36	38.85	19.08				15.20				
	2-Wire Voice Grade Port (Centrex 800 termination)			UEP95	UEPQB	1.36	38.85	19.08				15.20				
	2-Wire Voice Grade Port (Centrex with Caller ID)1			UEP95	UEPQH	1.36	38.85	19.08				15.20				
	2-Wire Voice Grade Port (Centrex from diff Serving Wire Center)2			UEP95	UEPQM	1.36	104.41	67.93				15.20				
	2-Wire Voice Grade Port, Diff Serving Wire Center - 800 Service Term			UEP95	UEPQZ	1.36	104.41	67.93				15.20				
	2-Wire Voice Grade Port terminated in on Megalink or equivalent			UEP95	UEPQ9	1.36	38.85	19.08				15.20				
	2-Wire Voice Grade Port Terminated on 800 Service Term			UEP95	UEPQ2	1.36	38.85	19.08				15.20				
	Local Switching															
	Centrex Intercom Funtionality, per port			UEP95	URECS	0.8577						15.20				
	Local Number Portability															
	Local Number Portability (1 per port)			UEP95	LNPCC	0.35										
	Features															
	All Standard Features Offered, per port			UEP95	UEPVF	0.00						15.20				
	All Select Features Offered, per port			UEP95	UEPVS	0.00	412.25					15.20				
	All Centrex Control Features Offered, per port			UEP95	UEPVC	0.00						15.20				
	NARS															
	Unbundled Network Access Register - Combination			UEP95	UARCX	0.00	0.00	0.00				15.20				
	Unbundled Network Access Register - Indial			UEP95	UAR1X	0.00	0.00	0.00				15.20				

CATEGORY	RATE ELEMENTS	Interim	Zone	BCS	USOC	RATES($) Rec	Nonrecurring First	Nonrecurring Add'l	Nonrecurring Disconnect First	Nonrecurring Disconnect Add'l	Svc Order Submitted Elec per LSR	Svc Order Submitted Manually per LSR	OSS Rates($) Incremental Charge - Manual Svc Order vs. Electronic-1st	Incremental Charge - Manual Svc Order vs. Electronic-Add'l	Incremental Charge - Manual Svc Order vs. Electronic-Disc 1st	Incremental Charge - Manual Svc Order vs. Electronic-Disc Add'l
											SOMEC	SOMAN	SOMAN	SOMAN	SOMAN	SOMAN
	Unbundled Network Access Register - Outdial			UEP95	UAROX	0.00	0.00	0.00				15.20				
Miscellaneous Terminations																
2-Wire Trunk Side																
	Trunk Side Terminations, each			UEP95	CEND6	8.29	115.85	18.20				15.20				
4-Wire Digital (1.544 Megabits)																
	DS1 Circuit Terminations, each			UEP95	M1HD1	68.47	196.18	92.92	4.90			15.20				
	DS0 Channels Activated, each			UEP95	M1HDO	0.00	14.06					15.20				
Interoffice Channel Mileage - 2-Wire																
	Interoffice Channel Facilities Termination			UEP95	MIGBC	22.60	39.36	26.62				15.20				
	Interoffice Channel mileage, per mile or fraction of mile			UEP95	MIGBM	0.013										
Feature Activations (DS0) Centrex Loops on Channelized DS1 Service																
D4 Channel Bank Feature Activations																
	Feature Activation on D-4 Channel Bank Centrex Loop Slot			UEP95	1PQWS	0.6497						15.20				
	Feature Activation on D-4 Channel Bank FX line Side Loop Slot			UEP95	1PQW6	0.6497						15.20				
	Feature Activation on D-4 Channel Bank FX Trunk Side Loop Slot			UEP95	1PQW7	0.6497						15.20				
	Feature Activation on D-4 Channel Bank Centrex Loop Slot - Different Wire Center			UEP95	1PQWP	0.6497						15.20				
	Feature Activation on D-4 Channel Bank Private Line Loop Slot			UEP95	1PQWV	0.6497						15.20				
	Feature Activation on D-4 Channel Bank Tjie Line/Trunk Loop Slot			UEP95	1PQWQ	0.6497						15.20				
	Feature Activation on D-4 Channel Bank WATS Loop Slot			UEP95	1PQWA	0.6497						15.20				
Non-Recurring Charges (NRC) Associated with UNE-P Centrex																
	NRC Conversion Currently Combined Switch-As-Is with allowed changes, per port			UEP95	USAC2		0.10	0.10				15.20				
	Conversion of Existing Centrex Common Block, each			UEP95	USACN		36.66	16.10				15.20				
	New Centrex Standard Common Block			UEP95	M1ACS	0.00	680.40					15.20				
	New Centrex Customized Common Block			UEP95	M1ACC	0.00	680.40					15.20				
	NAR Establishment Charge, Per Occasion			UEP95	URECA	0.00	73.93					15.20				
UNE-P CENTREX - DMS100 (Valid in All States)																
2-Wire VG Loop/2-Wire Voice Grade Port (Centrex) Combo																
UNE Port/Loop Combination Rates (Non-Design)																
	2-Wire VG Loop/2-Wire Voice Grade Port (Centrex) Port Combo - Non-Design		1	UEP9D		13.13										
	2-Wire VG Loop/2-Wire Voice Grade Port (Centrex)Port Combo - Non-Design		2	UEP9D		23.75										
	2-Wire VG Loop/2-Wire Voice Grade Port (Centrex)Port Combo - Non-Design		3	UEP9D		49.62										
UNE Port/Loop Combination Rates (Design)																
	2-Wire VG Loop/2-Wire Voice Grade Port (Centrex) Port Combo - Design		1	UEP9D		16.29										
	2-Wire VG Loop/2-Wire Voice Grade Port (Centrex)Port Combo - Design		2	UEP9D		26.71										
	2-Wire VG Loop/2-Wire Voice Grade Port (Centrex)Port Combo - Design		3	UEP9D		51.82										
UNE Loop Rate																
	2-Wire Voice Grade Loop (SL 1) - Zone 1		1	UEP9D	UECS1	11.77										
	2-Wire Voice Grade Loop (SL 1) - Zone 2		2	UEP9D	UECS1	22.39										
	2-Wire Voice Grade Loop (SL 1) - Zone 3		3	UEP9D	UECS1	48.26										
	2-Wire Voice Grade Loop (SL 2) - Zone 1		1	UEP9D	UECS2	14.93										
	2-Wire Voice Grade Loop (SL 2) - Zone 2		2	UEP9D	UECS2	25.35										
	2-Wire Voice Grade Loop (SL 2) - Zone 3		3	UEP9D	UECS2	50.46										
UNE Port Rate																
ALL STATES																
	2-Wire Voice Grade Port (Centrex) Basic Local Area			UEP9D	UEPYA	1.36	38.85	19.08				15.20				
	2-Wire Voice Grade Port (Centrex 800 termination)Basic Local Area			UEP9D	UEPYB	1.36	38.85	19.08				15.20				

CATEGORY		RATE ELEMENTS	Interim	Zone	BCS	USOC	RATES($)					Svc Order Submitted Elec per LSR	Svc Order Submitted Manually per LSR	Incremental Charge - Manual Svc Order vs. Electronic-1st	Incremental Charge - Manual Svc Order vs. Electronic-Add'l	Incremental Charge - Manual Svc Order vs. Electronic-Disc 1st	Incremental Charge - Manual Svc Order vs. Electronic-Disc Add'l
							Rec	Nonrecurring		Nonrecurring Disconnect		OSS Rates($)					
								First	Add'l	First	Add'l	SOMEC	SOMAN	SOMAN	SOMAN	SOMAN	SOMAN
		2-Wire Voice Grade Port (Centrex / EBS-PSET)3Basic Local Area			UEP9D	UEPYC	1.36	38.85	19.08				15.20				
		2-Wire Voice Grade Port (Centrex / EBS-M5009)3Basic Local Area			UEP9D	UEPYD	1.36	38.85	19.08				15.20				
		2-Wire Voice Grade Port (Centrex / EBS-M5209))3 Basic Local Area			UEP9D	UEPYE	1.36	38.85	19.08				15.20				
		2-Wire Voice Grade Port (Centrex / EBS-M5112))3 Basic Local Area			UEP9D	UEPYF	1.36	38.85	19.08				15.20				
		2-Wire Voice Grade Port (Centrex / EBS-M5312))3Basic Local Area			UEP9D	UEPYG	1.36	38.85	19.08				15.20				
		2-Wire Voice Grade Port (Centrex / EBS-M5008))3 Basic Local Area			UEP9D	UEPYT	1.36	38.85	19.08				15.20				
		2-Wire Voice Grade Port (Centrex / EBS-M5208))3 Basic Local Area			UEP9D	UEPYU	1.36	38.85	19.08				15.20				
		2-Wire Voice Grade Port (Centrex / EBS-M5216))3 Basic Local Area			UEP9D	UEPYV	1.36	38.85	19.08				15.20				
		2-Wire Voice Grade Port (Centrex / EBS-M5316))3 Basic Local Area			UEP9D	UEPY3	1.36	38.85	19.08				15.20				
		2-Wire Voice Grade Port (Centrex with Caller ID) Basic Local Area			UEP9D	UEPYH	1.36	38.85	19.08				15.20				
		2-Wire Voice Grade Port (Centrex/Caller ID/Msg Wtg Lamp Indication))3 Basic Local Area			UEP9D	UEPYW	1.36	38.85	19.08				15.20				
		2-Wire Voice Grade Port (Centrex/Msg Wtg Lamp Indication))3 Basic Local Area			UEP9D	UEPYJ	1.36	38.85	19.08				15.20				
		2-Wire Voice Grade Port (Centrex from diff Serving Wire Center) 2 Basic Local Area			UEP9D	UEPYM	1.36	104.41	67.93				15.20				
		2-Wire Voice Grade Port (Centrex/differ SWC /EBS-PSET)2, 3 Basic Local Area			UEP9D	UEPYO	1.36	104.41	67.93				15.20				
		2-Wire Voice Grade Port (Centrex/differ SWC /EBS-M5009)2, 3 Basic Local Area			UEP9D	UEPYP	1.36	104.41	67.93				15.20				
		2-Wire Voice Grade Port (Centrex/differ SWC /EBS-5209)2, 3 Basic Local Area			UEP9D	UEPYQ	1.36	104.41	67.93				15.20				
		2-Wire Voice Grade Port (Centrex/differ SWC /EBS-M5112)2, 3 Basic Local Area			UEP9D	UEPYR	1.36	104.41	67.93				15.20				
		2-Wire Voice Grade Port (Centrex/differ SWC /EBS-M5312)2, 3 Basic Local Area			UEP9D	UEPYS	1.36	104.41	67.93				15.20				
		2-Wire Voice Grade Port (Centrex/differ SWC /EBS-M5008)2, 3 Basic Local Area			UEP9D	UEPY4	1.36	104.41	67.93				15.20				
		2-Wire Voice Grade Port (Centrex/differ SWC /EBS-M5208)2, 3 Basic Local Area			UEP9D	UEPY5	1.36	104.41	67.93				15.20				
		2-Wire Voice Grade Port (Centrex/differ SWC /EBS-M5216)2, 3 Basic Local Area			UEP9D	UEPY6	1.36	104.41	67.93				15.20				
		2-Wire Voice Grade Port (Centrex/differ SWC /EBS-M5316)2, 3 Basic Local Area			UEP9D	UEPY7	1.36	104.41	67.93				15.20				
		2-Wire Voice Grade Port, Diff Serving Wire Center - 800 Service Term			UEP9D	UEPYZ	1.36	104.41	67.93				15.20				
		2-Wire Voice Grade Port terminated in on Megalink or equivalent Basic Local Area			UEP9D	UEPY9	1.36	38.85	19.08				15.20				
		2-Wire Voice Grade Port Terminated on 800 Service Term Basic Local Area			UEP9D	UEPY2	1.36	38.85	19.08				15.20				
	AL, KY, LA, MS, SC, & TN Only																
		2-Wire Voice Grade Port (Centrex)			UEP9D	UEPQA	1.36	38.85	19.08				15.20				
		2-Wire Voice Grade Port (Centrex 800 termination)			UEP9D	UEPQB	1.36	38.85	19.08				15.20				
		2-Wire Voice Grade Port (Centrex / EBS-PSET)3			UEP9D	UEPQC	1.36	38.85	19.08				15.20				
		2-Wire Voice Grade Port (Centrex / EBS-M5009)3			UEP9D	UEPQD	1.36	38.85	19.08				15.20				
		2-Wire Voice Grade Port (Centrex / EBS-M5209)3			UEP9D	UEPQE	1.36	38.85	19.08				15.20				
		2-Wire Voice Grade Port (Centrex / EBS-M5112)3			UEP9D	UEPQF	1.36	38.85	19.08				15.20				
		2-Wire Voice Grade Port (Centrex / EBS-M5312)3			UEP9D	UEPQG	1.36	38.85	19.08				15.20				
		2-Wire Voice Grade Port (Centrex / EBS-M5008)3			UEP9D	UEPQT	1.36	38.85	19.08				15.20				

UNBUNDLED NETWORK ELEMENTS - Louisiana														Attachment: 2		Exhibit: B	
CATEGORY		RATE ELEMENTS	Interim	Zone	BCS	USOC	RATES($)					Svc Order Submitted Elec per LSR	Svc Order Submitted Manually per LSR	Incremental Charge - Manual Svc Order vs. Electronic-1st	Incremental Charge - Manual Svc Order vs. Electronic-Add'l	Incremental Charge - Manual Svc Order vs. Electronic-Disc 1st	Incremental Charge - Manual Svc Order vs. Electronic-Disc Add'l
							Rec	Nonrecurring		Nonrecurring Disconnect		OSS Rates($)					
								First	Add'l	First	Add'l	SOMEC	SOMAN	SOMAN	SOMAN	SOMAN	SOMAN
		2-Wire Voice Grade Port (Centrex / EBS-M5208)3			UEP9D	UEPQU	1.36	38.85	19.08				15.20				
		2-Wire Voice Grade Port (Centrex / EBS-M5216)3			UEP9D	UEPQV	1.36	38.85	19.08				15.20				
		2-Wire Voice Grade Port (Centrex / EBS-M5316)3			UEP9D	UEPQ3	1.36	38.85	19.08				15.20				
		2-Wire Voice Grade Port (Centrex with Caller ID)			UEP9D	UEPQH	1.36	38.85	19.08				15.20				
		2-Wire Voice Grade Port (Centrex/Caller ID/Msg Wtg Lamp Indication)3			UEP9D	UEPQW	1.36	38.85	19.08				15.20				
		2-Wire Voice Grade Port (Centrex/Msg Wtg Lamp Indication)3			UEP9D	UEPQJ	1.36	38.85	19.08				15.20				
		2-Wire Voice Grade Port (Centrex from diff Serving Wire Center) 2			UEP9D	UEPQM	1.36	104.41	67.93				15.20				
		2-Wire Voice Grade Port (Centrex/differ SWC /EBS-PSET)2, 3			UEP9D	UEPQO	1.36	104.41	67.93				15.20				
		2-Wire Voice Grade Port (Centrex/differ SWC /EBS-M5009)2, 3			UEP9D	UEPQP	1.36	104.41	67.93				15.20				
		2-Wire Voice Grade Port (Centrex/differ SWC /EBS-5209)2, 3			UEP9D	UEPQQ	1.36	104.41	67.93				15.20				
		2-Wire Voice Grade Port (Centrex/differ SWC /EBS-M5112)2, 3			UEP9D	UEPQR	1.36	104.41	67.93				15.20				
		2-Wire Voice Grade Port (Centrex/differ SWC /EBS-M5312)2, 3			UEP9D	UEPQS	1.36	104.41	67.93				15.20				
		2-Wire Voice Grade Port (Centrex/differ SWC /EBS-M5008)2, 3			UEP9D	UEPQ4	1.36	104.41	67.93				15.20				
		2-Wire Voice Grade Port (Centrex/differ SWC /EBS-M5208)2, 3			UEP9D	UEPQ5	1.36	104.41	67.93				15.20				
		2-Wire Voice Grade Port (Centrex/differ SWC /EBS-M5216)2, 3			UEP9D	UEPQ6	1.36	104.41	67.93				15.20				
		2-Wire Voice Grade Port (Centrex/differ SWC /EBS-M5316)2, 3			UEP9D	UEPQ7	1.36	104.41	67.93				15.20				
		2-Wire Voice Grade Port, Diff Serving Wire Center - 800 Service Term			UEP9D	UEPQZ	1.36	104.41	67.93				15.20				
		2-Wire Voice Grade Port terminated in on Megalink or equivalent			UEP9D	UEPQ9	1.36	38.85	19.08				15.20				
		2-Wire Voice Grade Port Terminated on 800 Service Term			UEP9D	UEPQ2	1.36	38.85	19.08				15.20				
	Local Switching																
		Centrex Intercom Funtionality, per port			UEP9D	URECS	0.8577										
	Local Number Portability																
		Local Number Portability (1 per port)			UEP9D	LNPCC	0.35										
	Features																
		All Standard Features Offered, per port			UEP9D	UEPVF	0.00						15.20				
		All Select Features Offered, per port			UEP9D	UEPVS	0.00	412.25					15.20				
		All Centrex Control Features Offered, per port			UEP9D	UEPVC	0.00						15.20				
	NARS																
		Unbundled Network Access Register - Combination			UEP9D	UARCX	0.00	0.00	0.00				15.20				
		Unbundled Network Access Register - Inward			UEP9D	UAR1X	0.00	0.00	0.00				15.20				
		Unbundled Network Access Register - Outdial			UEP9D	UAROX	0.00	0.00	0.00				15.20				
	Miscellaneous Terminations																
	2-Wire Trunk Side																
		Trunk Side Terminations, each			UEP9D	CEND6	8.29	115.85	18.20				15.20				
	4-Wire Digital (1.544 Megabits)																
		DS1 Circuit Terminations, each			UEP9D	M1HD1	68.47	196.18	98.62				15.20				
		DS0 Channels Activiated per Channel			UEP9D	M1HDO	0.00	14.06					15.20				
	Interoffice Channel Mileage - 2-Wire																
		Interoffice Channel Facilities Termination			UEP9D	MIGBC	22.60	39.36	26.62				15.20				
		Interoffice Channel mileage, per mile or fraction of mile			UEP9D	MIGBM	0.013										
	Feature Activations (DS0) Centrex Loops on Channelized DS1 Service																
	D4 Channel Bank Feature Activations																
		Feature Activation on D-4 Channel Bank Centrex Loop Slot			UEP9D	1PQWS	0.6497						15.20				
		Feature Activation on D-4 Channel Bank FX line Side Loop Slot			UEP9D	1PQW6	0.6497						15.20				
		Feature Activation on D-4 Channel Bank FX Trunk Side Loop Slot			UEP9D	1PQW7	0.6497						15.20				

CATEGORY	RATE ELEMENTS	Interim	Zone	BCS	USOC	RATES($) Rec	Nonrecurring First	Nonrecurring Add'l	Nonrecurring Disconnect First	Nonrecurring Disconnect Add'l	Svc Order Submitted Elec per LSR SOMEC	Svc Order Submitted Manually per LSR SOMAN	OSS Rates($) Incremental Charge - Manual Svc Order vs. Electronic-1st SOMAN	Incremental Charge - Manual Svc Order vs. Electronic-Add'l SOMAN	Incremental Charge - Manual Svc Order vs. Electronic-Disc 1st SOMAN	Incremental Charge - Manual Svc Order vs. Electronic-Disc Add'l SOMAN
	Feature Activation on D-4 Channel Bank Centrex Loop Slot - Different Wire Center			UEP9D	1PQWP	0.6497						15.20				
	Feature Activation on D-4 Channel Bank Private Line Loop Slot			UEP9D	1PQWV	0.6497						15.20				
	Feature Activation on D-4 Channel Bank Tjie Line/Trunk Loop Slot			UEP9D	1PQWQ	0.6497						15.20				
	Feature Activation on D-4 Channel Bank WATS Loop Slot			UEP9D	1PQWA	0.6497						15.20				
Non-Recurring Charges (NRC) Associated with UNE-P Centrex																
	NRC Conversion Currently Combined Switch-As-Is with allowed changes, per port			UEP9D	USAC2		0.10	0.10				15.20				
	Conversion of existing Centrex Common Block, each			UEP9D	USACN		36.66	16.10				15.20				
	New Centrex Standard Common Block			UEP9D	M1ACS	0.00	680.40					15.20				
	New Centrex Customized Common Block			UEP9D	M1ACC	0.00	680.40					15.20				
	NAR Establishment Charge, Per Occasion			UEP9D	URECA	0.00	73.93					15.20				
UNE-P CENTREX - EWSD (Valid in AL, FL, KY, LA, MS & TN)																
2-Wire VG Loop/2-Wire Voice Grade Port (Centrex) Combo																
UNE Port/Loop Combination Rates (Non-Design)																
	2-Wire VG Loop/2-Wire Voice Grade Port (Centrex) Port Combo - Non-Design		1	UEP9E		13.13										
	2-Wire VG Loop/2-Wire Voice Grade Port (Centrex)Port Combo - Non-Design		2	UEP9E		23.75										
	2-Wire VG Loop/2-Wire Voice Grade Port (Centrex)Port Combo - Non-Design		3	UEP9E		49.62										
UNE Port/Loop Combination Rates (Design)																
	2-Wire VG Loop/2-Wire Voice Grade Port (Centrex) Port Combo - Design		1	UEP9E		16.29										
	2-Wire VG Loop/2-Wire Voice Grade Port (Centrex)Port Combo - Design		2	UEP9E		26.71										
	2-Wire VG Loop/2-Wire Voice Grade Port (Centrex)Port Combo - Design		3	UEP9E		51.82										
UNE Loop Rate																
	2-Wire Voice Grade Loop (SL 1) - Zone 1		1	UEP9E	UECS1	11.77										
	2-Wire Voice Grade Loop (SL 1) - Zone 2		2	UEP9E	UECS1	22.39										
	2-Wire Voice Grade Loop (SL 1) - Zone 3		3	UEP9E	UECS1	48.26										
	2-Wire Voice Grade Loop (SL 2) - Zone 1		1	UEP9E	UECS2	14.93										
	2-Wire Voice Grade Loop (SL 2) - Zone 2		2	UEP9E	UECS2	25.35										
	2-Wire Voice Grade Loop (SL 2) - Zone 3		3	UEP9E	UECS2	50.46										
UNE Port Rate																
AL, FL, KY, LA, MS, & TN only																
	2-Wire Voice Grade Port (Centrex) Basic Local Area			UEP9E	UEPYA	1.36	38.85	19.08				15.20				
	2-Wire Voice Grade Port (Centrex 800 termination)Basic Local Area			UEP9E	UEPYB	1.36	38.85	19.08				15.20				
	2-Wire Voice Grade Port (Centrex with Caller ID)1Basic Local Area			UEP9E	UEPYH	1.36	38.85	19.08				15.20				
	2-Wire Voice Grade Port (Centrex from diff Serving Wire Center)2 Basic Local Area			UEP9E	UEPYM	1.36	104.41	67.93				15.20				
	2-Wire Voice Grade Port, Diff Serving Wire Center - 800 Service Term - Basic Local Area			UEP9E	UEPYZ	1.36	104.41	67.93				15.20				
	2-Wire Voice Grade Port terminated in on Megalink or equivalent - Basic Local Area			UEP9E	UEPY9	1.36	38.85	19.08				15.20				
	2-Wire Voice Grade Port Terminated on 800 Service Term - Basic Local Area			UEP9E	UEPY2	1.36	38.85	19.08				15.20				
AL, KY, LA, MS, & TN Only																
	2-Wire Voice Grade Port (Centrex)			UEP9E	UEPQA	1.36	38.85	19.08				15.20				
	2-Wire Voice Grade Port (Centrex 800 termination)			UEP9E	UEPQB	1.36	38.85	19.08				15.20				
	2-Wire Voice Grade Port (Centrex with Caller ID)1			UEP9E	UEPQH	1.36	38.85	19.08				15.20				
	2-Wire Voice Grade Port (Centrex from diff Serving Wire Center)2			UEP9E	UEPQM	1.36	104.41	67.93				15.20				

CATEGORY	RATE ELEMENTS	Interim	Zone	BCS	USOC	RATES($) Rec	Nonrecurring First	Nonrecurring Add'l	Nonrecurring Disconnect First	Nonrecurring Disconnect Add'l	Svc Order Submitted Elec per LSR	Svc Order Submitted Manually per LSR	Incremental Charge - Manual Svc Order vs. Electronic- 1st	Incremental Charge - Manual Svc Order vs. Electronic- Add'l	Incremental Charge - Manual Svc Order vs. Electronic- Disc 1st	Incremental Charge - Manual Svc Order vs. Electronic- Disc Add'l
											OSS Rates($)					
											SOMEC	SOMAN	SOMAN	SOMAN	SOMAN	SOMAN
	2-Wire Voice Grade Port, Diff Serving Wire Center - 800 Service Term			UEP9E	UEPQZ	1.36	104.41	67.93				15.20				
	2-Wire Voice Grade Port terminated in on Megalink or equivalent			UEP9E	UEPQ9	1.36	38.85	19.08				15.20				
	2-Wire Voice Grade Port Terminated on 800 Service Term			UEP9E	UEPQ2	1.36	38.85	19.08				15.20				
Local Switching																
	Centrex Intercom Funtionality, per port			UEP9E	URECS	0.8577										
Local Number Portability																
	Local Number Portability (1 per port)			UEP9E	LNPCC	0.35										
Features																
	All Standard Features Offered, per port			UEP9E	UEPVF	0.00						15.20				
	All Select Features Offered, per port			UEP9E	UEPVS	0.00	412.25					15.20				
	All Centrex Control Features Offered, per port			UEP9E	UEPVC	0.00						15.20				
NARS																
	Unbundled Network Access Register - Combination			UEP9E	UARCX	0.00	0.00	0.00								
	Unbundled Network Access Register - Indial			UEP9E	UAR1X	0.00	0.00	0.00								
	Unbundled Network Access Register - Outdial			UEP9E	UAROX	0.00	0.00	0.00								
Miscellaneous Terminations																
2-Wire Trunk Side																
	Trunk Side Terminations, each			UEP9E	CEND6	8.29	115.85	18.20				15.20				
4-Wire Digital (1.544 Megabits)																
	DS1 Circuit Terminations, each			UEP9E	M1HD1	68.47	196.18	92.92				15.20				
	DS0 Channel Activated Per Channel			UEP9E	M1HDO	0.00	14.06					15.20				
Interoffice Channel Mileage - 2-Wire																
	Interoffice Channel Facilities Termination			UEP9E	MIGBC	22.60	39.36	26.62				15.20				
	Interoffice Channel mileage, per mile or fraction of mile			UEP9E	MIGBM	0.013										
Feature Activations (DS0) Centrex Loops on Channelized DS1 Service																
D4 Channel Bank Feature Activations																
	Feature Activation on D-4 Channel Bank Centrex Loop Slot			UEP9E	1PQWS	0.6497						15.20				
	Feature Activation on D-4 Channel Bank FX line Side Loop Slot			UEP9E	1PQW6	0.6497						15.20				
	Feature Activation on D-4 Channel Bank FX Trunk Side Loop Slot			UEP9E	1PQW7	0.6497						15.20				
	Feature Activation on D-4 Channel Bank Centrex Loop Slot - Different Wire Center			UEP9E	1PQWP	0.6497						15.20				
	Feature Activation on D-4 Channel Bank Private Line Loop Slot			UEP9E	1PQWV	0.6497						15.20				
	Feature Activation on D-4 Channel Bank Tjie Line/Trunk Loop Slot			UEP9E	1PQWQ	0.6497						15.20				
	Feature Activation on D-4 Channel Bank WATS Loop Slot			UEP9E	1PQWA	0.6497						15.20				
Non-Recurring Charges (NRC) Associated with UNE-P Centrex																
	NRC Conversion Currently Combined Switch-As-Is with allowed changes, per port			UEP9E	USAC2		0.10	0.10				15.20				
	Conversion of Existing Centrex Common Block, each			UEP9E	USACN		36.66	16.10				15.20				
	New Centrex Standard Common Block			UEP9E	M1ACS	0.00	680.40					15.20				
	New Centrex Customized Common Block			UEP9E	M1ACC	0.00	680.40					15.20				
	NAR Establishment Charge, Per Occasion			UEP9E	URECA	0.00	73.93					15.20				
UNE-P CENTREX - DCO - Valid in AL, KY, LA, MS, & TN)																
2-Wire VG Loop/2-Wire Voice Grade Port (Centrex) Combo																
UNE Port/Loop Combination Rates (Non-Design)																
	2-Wire VG Loop/2-Wire Voice Grade Port (Centrex) Port Combo - Non-Design		1	UEP93		13.13										
	2-Wire VG Loop/2-Wire Voice Grade Port (Centrex)Port Combo - Non-Design		2	UEP93		23.75										
	2-Wire VG Loop/2-Wire Voice Grade Port (Centrex)Port Combo - Non-Design		3	UEP93		49.62										
UNE Port/Loop Combination Rates (Design)																
	2-Wire VG Loop/2-Wire Voice Grade Port (Centrex) Port Combo - Design		1	UEP93		16.29										

UNBUNDLED NETWORK ELEMENTS - Louisiana													Attachment: 2		Exhibit: B	
CATEGORY	RATE ELEMENTS	Interim	Zone	BCS	USOC	RATES($)					Svc Order Submitted Elec per LSR	Svc Order Submitted Manually per LSR	Incremental Charge - Manual Svc Order vs. Electronic-1st	Incremental Charge - Manual Svc Order vs. Electronic-Add'l	Incremental Charge - Manual Svc Order vs. Electronic-Disc 1st	Incremental Charge - Manual Svc Order vs. Electronic-Disc Add'l
						Rec	Nonrecurring		Nonrecurring Disconnect		OSS Rates($)					
							First	Add'l	First	Add'l	SOMEC	SOMAN	SOMAN	SOMAN	SOMAN	SOMAN
	2-Wire VG Loop/2-Wire Voice Grade Port (Centrex)Port Combo - Design		2	UEP93		26.71										
	2-Wire VG Loop/2-Wire Voice Grade Port (Centrex)Port Combo - Design		3	UEP93		51.82										
UNE Loop Rate																
	2-Wire Voice Grade Loop (SL 1) - Zone 1		1	UEP93	UECS1	11.77										
	2-Wire Voice Grade Loop (SL 1) - Zone 2		2	UEP93	UECS1	22.36										
	2-Wire Voice Grade Loop (SL 1) - Zone 3		3	UEP93	UECS1	48.26										
	2-Wire Voice Grade Loop (SL 2) - Zone 1		1	UEP93	UECS2	14.93										
	2-Wire Voice Grade Loop (SL 2) - Zone 2		2	UEP93	UECS2	25.35										
	2-Wire Voice Grade Loop (SL 2) - Zone 3		3	UEP93	UECS2	50.46										
UNE Port Rate																
AL, KY, LA, MS, & TN only																
	2-Wire Voice Grade Port (Centrex) Basic Local Area			UEP93	UEPYA	1.36	38.85	19.08				15.20				
	2-Wire Voice Grade Port (Centrex 800 termination)Basic Local Area			UEP93	UEPYB	1.36	38.85	19.08				15.20				
	2-Wire Voice Grade Port (Centrex with Caller ID)1Basic Local Area			UEP93	UEPYH	1.36	38.85	19.08				15.20				
	2-Wire Voice Grade Port (Centrex from diff Serving Wire Center)2 Basic Local Area			UEP93	UEPYM	1.36	104.41	67.93				15.20				
	2-Wire Voice Grade Port, Diff Serving Wire Center - 800 Service Term - Basic Local Area			UEP93	UEPYZ	1.36	104.41	67.93				15.20				
	2-Wire Voice Grade Port terminated in on Megalink or equivalent - Basic Local Area			UEP93	UEPY9	1.36	38.85	19.08				15.20				
	2-Wire Voice Grade Port Terminated on 800 Service Term - Basic Local Area			UEP93	UEPY2	1.36	38.85	19.08				15.20				
	2-Wire Voice Grade Port (Centrex)			UEP93	UEPQA	1.36	38.85	19.08				15.20				
	2-Wire Voice Grade Port (Centrex 800 termination)			UEP93	UEPQB	1.36	38.85	19.08				15.20				
	2-Wire Voice Grade Port (Centrex with Caller ID)1			UEP93	UEPQH	1.36	38.85	19.08				15.20				
	2-Wire Voice Grade Port (Centrex from diff Serving Wire Center)2			UEP93	UEPQM	1.36	104.41	67.93				15.20				
	2-Wire Voice Grade Port, Diff Serving Wire Center - 800 Service Term			UEP93	UEPQZ	1.36	104.41	67.93				15.20				
	2-Wire Voice Grade Port terminated in on Megalink or equivalent			UEP93	UEPQ9	1.36	38.85	19.08				15.20				
	2-Wire Voice Grade Port Terminated on 800 Service Term			UEP93	UEPQ2	1.36	38.85	19.08				15.20				
Local Switching																
	Centrex Intercom Funtionality, per port			UEP93	URECS	0.8577										
Local Number Portability																
	Local Number Portability (1 per port)			UEP93	LNCCC	0.35										
Features																
	All Standard Features Offered, per port			UEP93	UEPVF	0.00						15.20				
	All Centrex Control Features Offered, per port			UEP93	UEPVC	0.00						15.20				
NARS																
	Unbundled Network Access Register - Combination			UEP93	UARCX	0.00	0.00	0.00				15.20				
	Unbundled Network Access Register - Indial			UEP93	UAR1X	0.00	0.00	0.00				15.20				
	Unbundled Network Access Register - Outdial			UEP93	UAROX	0.00	0.00	0.00				15.20				
Miscellaneous Terminations																
2-Wire Trunk Side																
	Trunk Side Terminations, each			UEP93	CEND6	8.27	115.85	18.20				15.20				
4-Wire Digital (1.544 Megabits)																
	DS1 Circuit Terminations, each			UEP93	M1HD1	68.47	196.18	92.92				15.20				
	DS0 Channels Activated, Per Channel			UEP93	M1HDO	0.00	14.01					15.20				
Interoffice Channel Mileage - 2-Wire																
	Interoffice Channel Facilities Termination			UEP93	MIGBC	22.60	39.36	26.62				15.20				
	Interoffice Channel mileage, per mile or fraction of mile			UEP93	MIGBM	0.013										
Feature Activations (DS0) Centrex Loops on Channelized DS1 Service																
D4 Channel Bank Feature Activations																
	Feature Activation on D-4 Channel Bank Centrex Loop Slot			UEP93	1PQWS	0.6497						15.20				

UNBUNDLED NETWORK ELEMENTS - Louisiana														Attachment: 2		Exhibit: B	
CATEGORY		RATE ELEMENTS	Interim	Zone	BCS	USOC	RATES($)					Svc Order Submitted Elec per LSR	Svc Order Submitted Manually per LSR	Incremental Charge - Manual Svc Order vs. Electronic-1st	Incremental Charge - Manual Svc Order vs. Electronic-Add'l	Incremental Charge - Manual Svc Order vs. Electronic-Disc 1st	Incremental Charge - Manual Svc Order vs. Electronic-Disc Add'l
							Rec	Nonrecurring		Nonrecurring Disconnect		OSS Rates($)					
								First	Add'l	First	Add'l	SOMEC	SOMAN	SOMAN	SOMAN	SOMAN	SOMAN
		Feature Activation on D-4 Channel Bank FX Line Side Loop Slot			UEP93	1PQW6	0.6497						15.20				
		Feature Activation on D-4 Channel Bank FX Trunk Side Loop Slot			UEP93	1PQW7	0.6497						15.20				
		Feature Activation on D-4 Channel Bank Centrex Loop Slot - Different Wire Center			UEP93	1PQWP	0.6497						15.20				
		Feature Activation on D-4 Channel Bank Private Line Loop Slot			UEP93	1PQWV	0.6497						15.20				
		Feature Activation on D-4 Channel Bank Tie Line/Trunk Loop Slot			UEP93	1PQWQ	0.6497						15.20				
		Feature Activation on D-4 Channel Bank WATS Loop Slot			UEP93	1PQWA	0.6497						15.20				
	Non-Recurring Charges (NRC) Associated with UNE-P Centrex																
		NRC Conversion Currently Combined Switch-As-Is with allowed changes, per port			UEP93	USAC2		0.10	0.10				15.20				
		Conversion of Existing Centrex Common Block, each			UEP93	USACN		36.66	16.10				15.20				
		New Centrex Standard Common Block			UEP93	M1ACS	0.00	680.40					15.20				
		New Centrex Customized Common Block			UEP93	M1ACC	0.00	680.40					15.20				
		NAR Establishment Charge, Per Occasion			UEP93	URECA	0.00	73.93					15.20				
	Note 1 - Required Port for Centrex Control in 1AESS, 5ESS & EWSD																
	Note 2 - Requres Interoffice Channel Mileage																
	Note 3 - Requires Specific Customer Premises Equipment																
	NOTE: Rates displaying an "R" in Interim column are interim and subject to rate true-up as set forth in General Terms and Conditions.																

CATEGORY	RATE ELEMENTS	Interim	Zone	BCS	USOC	RATES($) Rec	Nonrecurring First	Nonrecurring Add'l	Nonrecurring Disconnect First	Nonrecurring Disconnect Add'l	Svc Order Submitted Elec per LSR	Svc Order Submitted Manually per LSR	Incremental Charge - Manual Svc Order vs. Electronic-1st	Incremental Charge - Manual Svc Order vs. Electronic-Add'l	Incremental Charge - Manual Svc Order vs. Electronic-Disc 1st	Incremental Charge - Manual Svc Order vs. Electronic-Disc Add'l
											OSS Rates($)					
											SOMEC	SOMAN	SOMAN	SOMAN	SOMAN	SOMAN
OPERATIONAL SUPPORT SYSTEMS																
	NOTE: (1) Electronic Service Order: CLEC should contact its contract negotiator if it prefers the state specific electronic service ordering charges as ordered by the State Commissions. The electronic service ordering charge currently contained in this rate exhibit is the BellSouth regional electronic service ordering charge. CLEC may elect either the state specific Commission ordered rates for the electronic service ordering charges, or CLEC may elect the regional electronic service ordering charge.															
	NOTE: (2) Any element that can be ordered electronically will be billed according to the SOMEC rate listed in this category. Please refer to BellSouth's Business Rules for Local Ordering (BBR-LO) to determine if a product can be ordered electronically. For those elements that cannot be ordered electronically at present per the BBR-LO, the listed SOMEC rate in this category reflects the charge that would be billed to a CLEC once electronic ordering capabilities come on-line for that element. Otherwise, the manual ordering charge, SOMAN, will be applied to a CLECs bill when it submits an LSR to BellSouth.															
	Manual Service Order Charge, per LSR, Disconnect Only (MS)				SOMAN				1.97							
	Electronic OSS Charge, per LSR, submitted via BST's OSS interactive interfaces (Regional)				SOMEC		3.50									
UNBUNDLED EXCHANGE ACCESS LOOP																
	2-WIRE ANALOG VOICE GRADE LOOP															
	2-Wire Analog Voice Grade Loop - Service Level 1- Zone 1		1	UEANL	UEAL2	12.03	37.92	17.55	23.48	5.25		15.75				
	2-Wire Analog Voice Grade Loop - Service Level 1- Zone 2		2	UEANL	UEAL2	16.87	37.92	17.55	23.48	5.25		15.75				
	2-Wire Analog Voice Grade Loop - Service Level 1- Zone 3		3	UEANL	UEAL2	25.68	37.92	17.55	23.48	5.25		15.75				
	2-Wire Analog Voice Grade Loop - Service Level 1-Zone 4		4	UEANL	UEAL2	43.85	37.92	17.55	23.48	5.25		15.75				
	Loop Testing - Basic 1st Half Hour			UEANL	URET1		34.36					15.75				
	Loop Testing - Basic Additional Half Hour			UEANL	URETA		19.97					15.75				
	CLEC to CLEC Conversion Charge Without Outside Dispatch			UEANL	UREWO		15.75	8.92				15.75				
	Engineering Information Document (EI)			UEANL			13.51	13.51								
	Manual Order Coordination for UVL-SL1s (per loop)			UEANL	UEAMC		8.20	8.20								
	Order Coordination for Specified Conversion Time for UVL-SL1 (per LSR)			UEANL	OCOSL		18.19	18.19								
	2-WIRE Unbundled COPPER LOOP															
	2-Wire Unbundled Copper Loop - Non-Designed Zone 1	I	1	UEQ	UEQ2X	11.01	36.53	16.16	22.66	4.42		15.75				
	2 Wire Unbundled Copper Loop - Non-Designed - Zone 2	I	2	UEQ	UEQ2X	11.51	36.53	16.16	22.66	4.42		15.75				
	2 Wire Unbundled Copper Loop - Non-Designed - Zone 3	I	3	UEQ	UEQ2X	11.57	36.53	16.16	22.66	4.42		15.75				
	2 Wire Unbundled Copper Loop - Non-Designed - Zone 4	I	4	UEQ	UEQ2X	13.10	36.53	16.16	22.66	4.42		15.75				
	Order Coordination 2 Wire Unbundled Copper Loop - Non-Designed (per loop)			UEQ	USBMC		8.20	8.20								
	Engineering Information Document			UEQ			13.51	13.51								
	Loop Testing - Basic 1st Half Hour			UEQ	URET1		34.36					15.75				
	Loop Testing - Basic Additional Half Hour			UEQ	URETA		19.97					15.75				
	CLEC to CLEC Conversion Charge Without Outside Dispatch			UEQ	UREWO		14.24	7.42				15.75				
UNBUNDLED EXCHANGE ACCESS LOOP																
	2-WIRE ANALOG VOICE GRADE LOOP															
	2 Wire Analog Voice Grade Loop-Service Level 1-Line Splitting-Zone 1		1	UEPSR UEPSB	UEALS	12.03	37.92	17.55	23.48	5.25		15.75				
	2 Wire Analog Voice Grade Loop-Service Level 1-Line Splitting-Zone 1		1	UEPSR UEPSB	UEABS	12.03	37.92	17.55	23.48	5.25		15.75				
	2 Wire Analog Voice Grade Loop- Service Level 1-Line Splitting-Zone 2		2	UEPSR UEPSB	UEALS,	16.87	37.92	17.55	23.48	5.25		15.75				
	2 Wire Analog Voice Grade Loop- Service Level 1-Line Splitting-Zone 2		2	UEPSR UEPSB	UEABS	16.87	37.92	17.55	23.48	5.25		15.75				
	2 Wire Analog Voice Grade Loop-Service Level 1-Line Splitting-Zone 3		3	UEPSR UEPSB	UEALS,	25.68	37.92	17.55	23.48	5.25		15.75				
	2 Wire Analog Voice Grade Loop-Service Level 1-Line Splitting-Zone 3		3	UEPSR UEPSB	UEABS	25.68	37.92	17.55	23.48	5.25		15.75				
	2 Wire Analog Voice Grade Loop-Service Level 1-Line Splitting-Zone 4		4	UEPSR UEPSB	UEALS,	43.85	37.92	17.55	23.48	5.25		15.75				
	2 Wire Analog Voice Grade Loop-Service Level 1-Line Splitting-Zone 4		4	UEPSR UEPSB	UEABS	43.85	37.92	17.55	23.48	5.25		15.75				
UNBUNDLED EXCHANGE ACCESS LOOP																
	2-WIRE ANALOG VOICE GRADE LOOP															
	2-Wire Analog Voice Grade Loop - Service Level 2 w/Loop or Ground Start Signaling - Zone 1		1	UEA	UEAL2	13.89	105.96	68.28	52.82	10.37		15.75				
	2-Wire Analog Voice Grade Loop - Service Level 2 w/Loop or Ground Start Signaling - Zone 2		2	UEA	UEAL2	18.75	105.96	68.28	52.82	10.37		15.75				

CATEGORY	RATE ELEMENTS	Interim	Zone	BCS	USOC	RATES($) Rec	Nonrecurring First	Nonrecurring Add'l	Nonrecurring Disconnect First	Nonrecurring Disconnect Add'l	Svc Order Submitted Elec per LSR	Svc Order Submitted Manually per LSR	Incremental Charge - Manual Svc Order vs. Electronic-1st	Incremental Charge - Manual Svc Order vs. Electronic-Add'l	Incremental Charge - Manual Svc Order vs. Electronic-Disc 1st	Incremental Charge - Manual Svc Order vs. Electronic-Disc Add'l
											OSS Rates($)					
							First	Add'l	First	Add'l	SOMEC	SOMAN	SOMAN	SOMAN	SOMAN	SOMAN
	2-Wire Analog Voice Grade Loop - Service Level 2 w/Loop or Ground Start Signaling - Zone 3		3	UEA	UEAL2	27.55	105.96	68.28	52.82	10.37		15.75				
	2-Wire Analog Voice Grade Loop - Service Level 2 w/Loop or Ground Start Signaling - Zone 4		4	UEA	UEAL2	45.72	105.96	68.28	52.82	10.37		15.75				
	Order Coordination for Specified Conversion Time (per LSR)			UEA	OCOSL		18.19									
	2-Wire Analog Voice Grade Loop - Service Level 2 w/Reverse Battery Signaling - Zone 1		1	UEA	UEAR2	13.89	105.96	68.28	52.82	10.37		15.75				
	2-Wire Analog Voice Grade Loop - Service Level 2 w/Reverse Battery Signaling - Zone 2		2	UEA	UEAR2	18.75	105.96	68.28	52.82	10.37		15.75				
	2-Wire Analog Voice Grade Loop - Service Level 2 w/Reverse Battery Signaling - Zone 3		3	UEA	UEAR2	27.55	105.96	68.28	52.82	10.37		15.75				
	2-Wire Analog Voice Grade Loop - Service Level 2 w/Reverse Battery Signaling - Zone 4		4	UEA	UEAR2	45.72	105.96	68.28	52.82	10.37		15.75				
	Order Coordination for Specified Conversion Time (per LSR)			UEA	OCOSL		18.19									
	CLEC to CLEC Conversion Charge without outside dispatch			UEA	UREWO		87.56	36.29				15.75				
4-WIRE ANALOG VOICE GRADE LOOP																
	4-Wire Analog Voice Grade Loop - Zone 1		1	UEA	UEAL4	27.47	132.27	94.59	60.68	14.64		15.75				
	4-Wire Analog Voice Grade Loop - Zone 2		2	UEA	UEAL4	38.26	132.27	94.59	60.68	14.64		15.75				
	4-Wire Analog Voice Grade Loop - Zone 3		3	UEA	UEAL4	50.03	132.27	94.59	60.68	14.64		15.75				
	4-Wire Analog Voice Grade Loop - Zone 4		4	UEA	UEAL4	50.03	132.27	94.59	60.68	14.64		15.75				
	Order Coordination for Specified Conversion Time (per LSR)			UEA	OCOSL		18.19									
	CLEC to CLEC Conversion Charge without outside dispatch			UEA	UREWO		87.56	36.29				15.75				
2-WIRE ISDN DIGITAL GRADE LOOP																
	2-Wire ISDN Digital Grade Loop - Zone 1		1	UDN	U1L2X	21.01	117.61	79.92	52.82	10.37		15.75				
	2-Wire ISDN Digital Grade Loop - Zone 2		2	UDN	U1L2X	27.59	117.61	79.92	52.82	10.37		15.75				
	2-Wire ISDN Digital Grade Loop - Zone 3		3	UDN	U1L2X	37.34	117.61	79.92	52.82	10.37		15.75				
	2-Wire ISDN Digital Grade Loop - Zone 4		4	UDN	U1L2X	59.18	117.61	79.92	52.82	10.37		15.75				
	Order Coordination For Specified Conversion Time (per LSR)			UDN	OCOSL		18.19									
	CLEC to CLEC Conversion Charge without outside dispatch			UDN	UREWO		91.46	44.07				15.75				
2-WIRE Universal Digital Channel (UDC) COMPATIBLE LOOP																
	2-Wire Universal Digital Channel (UDC) Compatible Loop - Zone 1		1	UDC	UDC2X	21.01	117.61	79.92	52.82	10.37		15.75				
	2-Wire Universal Digital Channel (UDC) Compatible Loop - Zone 2		2	UDC	UDC2X	27.59	117.61	79.92	52.82	10.37		15.75				
	2-Wire Universal Digital Channel (UDC) Compatible Loop - Zone 3		3	UDC	UDC2X	37.34	117.61	79.92	52.82	10.37		15.75				
	2-Wire Universal Digital Channel (UDC) Compatible Loop - Zone 4		4	UDC	UDC2X	59.18	117.61	79.92	52.82	10.37		15.75				
	CLEC to CLEC Conversion Charge without outside dispatch *			UDC	UREWO		91.46	44.07				15.75				
2-WIRE ASYMMETRICAL DIGITAL SUBSCRIBER LINE (ADSL) COMPATIBLE LOOP																
	2 Wire Unbundled ADSL Loop including manual service inquiry & facility reservation - Zone 1		1	UAL	UAL2X	11.11	121.27	70.81	50.38	7.93		15.75				
	2 Wire Unbundled ADSL Loop including manual service inquiry & facility reservation - Zone 2		2	UAL	UAL2X	11.47	121.27	70.81	50.38	7.93		15.75				
	2 Wire Unbundled ADSL Loop including manual service inquiry & facility reservation - Zone 3		3	UAL	UAL2X	11.74	121.27	70.81	50.38	7.93		15.75				
	2 Wire Unbundled ADSL Loop including manual service inquiry & facility reservation - Zone 4		4	UAL	UAL2X	12.69	121.27	70.81	50.38	7.93		15.75				
	Order Coordination for Specified Conversion Time (per LSR)			UAL	OCOSL		18.19									
	2 Wire Unbundled ADSL Loop without manual service inquiry & facility reservaton - Zone 1		1	UAL	UAL2W	11.11	96.15	58.03	50.38	7.93		15.75				
	2 Wire Unbundled ADSL Loop without manual service inquiry & facility reservaton - Zone 2		2	UAL	UAL2W	11.47	96.15	58.03	50.38	7.93		15.75				
	2 Wire Unbundled ADSL Loop without manual service inquiry & facility reservaton - Zone 3		3	UAL	UAL2W	11.74	96.15	58.03	50.38	7.93		15.75				
	2 Wire Unbundled ADSL Loop without manual service inquiry & facility reservaton - Zone 4		4	UAL	UAL2W	12.69	96.15	58.03	50.38	7.93		15.75				
	Order Coordination for Specified Conversion Time (per LSR)			UAL	OCOSL		18.19									
	CLEC to CLEC Conversion Charge without outside dispatch			UAL	UREWO		86.04	40.33				15.75				

CATEGORY	RATE ELEMENTS	Interim	Zone	BCS	USOC	RATES($) Rec	Nonrecurring First	Nonrecurring Add'l	Nonrecurring Disconnect First	Nonrecurring Disconnect Add'l	Svc Order Submitted Elec per LSR	Svc Order Submitted Manually per LSR	Incremental Charge - Manual Svc Order vs. Electronic-1st	Incremental Charge - Manual Svc Order vs. Electronic-Add'l	Incremental Charge - Manual Svc Order vs. Electronic-Disc 1st	Incremental Charge - Manual Svc Order vs. Electronic-Disc Add'l
											OSS Rates($)					
											SOMEC	SOMAN	SOMAN	SOMAN	SOMAN	SOMAN
2-WIRE HIGH BIT RATE DIGITAL SUBSCRIBER LINE (HDSL) COMPATIBLE LOOP																
	2 Wire Unbundled HDSL Loop including manual service inquiry & facility reservation - Zone 1		1	UHL	UHL2X	8.75	129.98	79.52	50.38	7.93		15.75				
	2 Wire Unbundled HDSL Loop including manual service inquiry & facility reservation - Zone 2		2	UHL	UHL2X	9.22	129.98	79.52	50.38	7.93		15.75				
	2 Wire Unbundled HDSL Loop including manual service inquiry & facility reservation - Zone 3		3	UHL	UHL2X	9.87	129.98	79.52	50.38	7.93		15.75				
	2 Wire Unbundled HDSL Loop including manual service inquiry & facility reservation - Zone 4		4	UHL	UHL2X	10.46	129.98	79.52	50.38	7.93		15.75				
	Order Coordination for Specified Conversion Time (per LSR)			UHL	OCOSL		18.19									
	2 Wire Unbundled HDSL Loop without manual service inquiry and facility reservation - Zone 1		1	UHL	UHL2W	8.75	104.86	66.74	50.38	7.93		15.75				
	2 Wire Unbundled HDSL Loop without manual service inquiry and facility reservation - Zone 2		2	UHL	UHL2W	9.22	104.86	66.74	50.38	7.93		15.75				
	2 Wire Unbundled HDSL Loop without manual service inquiry and facility reservation - Zone 3		3	UHL	UHL2W	9.87	104.86	66.74	50.38	7.93		15.75				
	2 Wire Unbundled HDSL Loop without manual service inquiry and facility reservation - Zone 4		4	UHL	UHL2W	10.46	104.86	66.74	50.38	7.93		15.75				
	Order Coordination for Specified Conversion Time (per LSR)			UHL	OCOSL		18.19									
	CLEC to CLEC Conversion Charge without outside dispatch			UHL	UREWO		85.98	40.33				15.75				
4-WIRE HIGH BIT RATE DIGITAL SUBSCRIBER LINE (HDSL) COMPATIBLE LOOP																
	4 Wire Unbundled HDSL Loop including manual service inquiry and facility reservation - Zone 1		1	UHL	UHL4X	13.78	158.74	108.28	56.72	10.68		15.75				
	4-Wire Unbundled HDSL Loop including manual service inquiry and facility reservation - Zone 2		2	UHL	UHL4X	13.43	158.74	108.28	56.72	10.68		15.75				
	4-Wire Unbundled HDSL Loop including manual service inquiry and facility reservation - Zone 3		3	UHL	UHL4X	15.59	158.74	108.28	56.72	10.68		15.75				
	4-Wire Unbundled HDSL Loop including manual service inquiry and facility reservation - Zone 4		4	UHL	UHL4X	14.46	158.74	108.28	56.72	10.68		15.75				
	Order Coordination for Specified Conversion Time (per LSR)			UHL	OCOSL		18.19									
	4-Wire Unbundled HDSL Loop without manual service inquiry and facility reservation - Zone 1		1	UHL	UHL4W	13.78	133.62	95.50	56.72	10.68		15.75				
	4-Wire Unbundled HDSL Loop without manual service inquiry and facility reservation - Zone 2		2	UHL	UHL4W	13.43	133.62	95.50	56.72	10.68		15.75				
	4-Wire Unbundled HDSL Loop without manual service inquiry and facility reservation - Zone 3		3	UHL	UHL4W	15.59	133.62	95.50	56.72	10.68		15.75				
	4-Wire Unbundled HDSL Loop without manual service inquiry and facility reservation - Zone 4		4	UHL	UHL4W	14.46	133.62	95.50	56.72	10.68		15.75				
	Order Coordination for Specified Conversion Time (per LSR)			UHL	OCOSL		18.19									
	CLEC to CLEC Conversion Charge without outside dispatch			UHL	UREWO		85.98	40.33				15.75				
4-WIRE DS1 DIGITAL LOOP																
	4-Wire DS1 Digital Loop - Zone 1		1	USL	USLXX	79.08	253.93	158.45	46.10	12.07		15.75				
	4-Wire DS1 Digital Loop - Zone 2		2	USL	USLXX	129.38	253.93	158.45	46.10	12.07		15.75				
	4-Wire DS1 Digital Loop - Zone 3		3	USL	USLXX	206.74	253.93	158.45	46.10	12.07		15.75				
	4-Wire DS1 Digital Loop - Zone 4		4	USL	USLXX	458.46	253.93	158.45	46.10	12.07		15.75				
	Order Coordination for Specified Conversion Time (per LSR)			USL	OCOSL		18.19									
	CLEC to CLEC Conversion Charge without outside dispatch			USL	UREWO		100.90	42.96				15.75				
4-WIRE 19.2, 56 OR 64 KBPS DIGITAL GRADE LOOP																
	4 Wire Unbundled Digital 19.2 Kbps		1	UDL	UDL19	27.44	126.53	88.85	60.68	14.64		15.75				
	4 Wire Unbundled Digital 19.2 Kbps		2	UDL	UDL19	34.55	126.53	88.85	60.68	14.64		15.75				
	4 Wire Unbundled Digital 19.2 Kbps		3	UDL	UDL19	40.76	126.53	88.85	60.68	14.64		15.75				
	4 Wire Unbundled Digital 19.2 Kbps		4	UDL	UDL19	32.25	126.53	88.85	60.68	14.64		15.75				
	4 Wire Unbundled Digital Loop 56 Kbps - Zone 1		1	UDL	UDL56	27.44	126.53	88.85	60.68	14.64		15.75				
	4 Wire Unbundled Digital Loop 56 Kbps - Zone 2		2	UDL	UDL56	34.55	126.53	88.85	60.68	14.64		15.75				
	4 Wire Unbundled Digital Loop 56 Kbps - Zone 3		3	UDL	UDL56	40.76	126.53	88.85	60.68	14.64		15.75				
	4 Wire Unbundled Digital Loop 56 Kbps - Zone 4		4	UDL	UDL56	32.25	126.53	88.85	60.68	14.64		15.75				
	Order Coordination for Specified Conversion Time (per LSR)			UDL	OCOSL		18.19									
	4 Wire Unbundled Digital Loop 64 Kbps - Zone 1		1	UDL	UDL64	27.44	126.53	88.85	60.68	14.64		15.75				
	4 Wire Unbundled Digital Loop 64 Kbps - Zone 2		2	UDL	UDL64	34.55	126.53	88.85	60.68	14.64		15.75				

CATEGORY	RATE ELEMENTS	Interim	Zone	BCS	USOC	RATES($)					Svc Order Submitted Elec per LSR	Svc Order Submitted Manually per LSR	Incremental Charge - Manual Svc Order vs. Electronic-1st	Incremental Charge - Manual Svc Order vs. Electronic-Add'l	Incremental Charge - Manual Svc Order vs. Electronic-Disc 1st	Incremental Charge - Manual Svc Order vs. Electronic-Disc Add'l
						Rec	Nonrecurring		Nonrecurring Disconnect		OSS Rates($)					
							First	Add'l	First	Add'l	SOMEC	SOMAN	SOMAN	SOMAN	SOMAN	SOMAN
	4 Wire Unbundled Digital Loop 64 Kbps - Zone 3		3	UDL	UDL64	40.76	126.53	88.85	60.68	14.64		15.75				
	4 Wire Unbundled Digital Loop 64 Kbps - Zone 4		4	UDL	UDL64	32.25	126.53	88.85	60.68	14.64		15.75				
	Order Coordination for Specified Conversion Time (per LSR)			UDL	OCOSL		18.19									
	CLEC to CLEC Conversion Charge without outside dispatch			UDL	UREWO		101.94	49.66				15.75				
2-WIRE Unbundled COPPER LOOP																
	2-Wire Unbundled Copper Loop/Short including manual service inquiry & facility reservation - Zone 1		1	UCL	UCLPB	11.11	120.34	69.87	50.38	7.93		15.75				
	2-Wire Unbundled Copper Loop/Short including manual service inquiry & facility reservation - Zone 2		2	UCL	UCLPB	11.47	120.34	69.87	50.38	7.93		15.75				
	2 Wire Unbundled Copper Loop/Short including manual service inquiry & facility reservation - Zone 3		3	UCL	UCLPB	11.74	120.34	69.87	50.38	7.93		15.75				
	2 Wire Unbundled Copper Loop/Short including manual service inquiry & facility reservation - Zone 4		4	UCL	UCLPB	12.69	120.34	69.87	50.38	7.93		15.75				
	Order Coordination for Unbundled Copper Loops (per loop)			UCL	UCLMC		8.20	8.20								
	2-Wire Unbundled Copper Loop/Short without manual service inquiry and facility reservation - Zone 1		1	UCL	UCLPW	11.11	95.21	57.09	50.38	7.93		15.75				
	2-Wire Unbundled Copper Loop/Short without manual service inquiry and facility reservation - Zone 2		2	UCL	UCLPW	11.47	95.21	57.09	50.38	7.93		15.75				
	2-Wire Unbundled Copper Loop/Short without manual service inquiry and facility reservation - Zone 3		3	UCL	UCLPW	11.74	95.21	57.09	50.38	7.93		15.75				
	2-Wire Unbundled Copper Loop/Short without manual service inquiry and facility reservation - Zone 4		4	UCL	UCLPW	12.69	95.21	57.09	50.38	7.93		15.75				
	Order Coordination for Unbundled Copper Loops (per loop)			UCL	UCLMC		8.20	8.20								
	2-Wire Unbundled Copper Loop/Long - includes manual srvc. inquiry and facility reservation - Zone 1		1	UCL	UCL2L	29.29	120.34	69.87	50.38	7.93		15.75				
	2-Wire Unbundled Copper Loop/Long - includes manual svc. inquiry and facility reservation - Zone 2		2	UCL	UCL2L	43.46	120.34	69.87	50.38	7.93		15.75				
	2-Wire Unbundled Copper Loop/Long - includes manual svc. inquiry and facility reservation - Zone 3		3	UCL	UCL2L	64.44	120.34	69.87	50.38	7.93		15.75				
	2-Wire Unbundled Copper Loop/Long - includes manual svc. inquiry and facility reservation - Zone 4		4	UCL	UCL2L	87.60	120.34	69.87	50.38	7.93		15.75				
	Order Coordination for Unbundled Copper Loops (per loop)			UCL	UCLMC		8.20	8.20								
	2-Wire Unbundled Copper Loop/Long - without manual service inquiry and facility reservation - Zone 1		1	UCL	UCL2W	29.29	95.21	57.09	50.38	7.93		15.75				
	2-Wire Unbundled Copper Loop/Long - without manual service inquiry and facility reservation - Zone 2		2	UCL	UCL2W	43.46	95.21	57.09	50.38	7.93		15.75				
	2-Wire Unbundled Copper Loop/Long - without manual service inquiry and facility reservation - Zone 3		3	UCL	UCL2W	64.44	95.21	57.09	50.38	7.93		15.75				
	2-Wire Unbundled Copper Loop/Long - without manual service inquiry and facility reservation - Zone 4		4	UCL	UCL2W	87.60	95.21	57.09	50.38	7.93		15.75				
	Order Coordination for Unbundled Copper Loops (per loop)			UCL	UCLMC		8.20	8.20								
	CLEC to CLEC Conversion Charge without outside dispatch (UCL-Des)			UCL	UREWO		95.21	42.40				15.75				
4-WIRE COPPER LOOP																
	4-Wire Copper Loop/Short - including manual service inquiry and facility reservation - Zone 1		1	UCL	UCL4S	17.30	144.68	94.22	56.72	10.68		15.75				
	4-Wire Copper Loop/Short - including manual service inquiry and facility reservation - Zone 2		2	UCL	UCL4S	18.84	144.68	94.22	56.72	10.68		15.75				
	4-Wire Copper Loop/Short - including manual service inquiry and facility reservation - Zone 3		3	UCL	UCL4S	21.33	144.68	94.22	56.72	10.68		15.75				
	4-Wire Copper Loop/Short - including manual service inquiry and facility reservation - Zone 4		4	UCL	UCL4S	21.33	144.68	94.22	56.72	10.68		15.75				
	Order Coordination for Unbundled Copper Loops (per loop)			UCL	UCLMC		8.20	8.20								
	4-Wire Copper Loop/Short - without manual service inquiry and facility reservation - Zone 1		1	UCL	UCL4W	17.30	119.56	81.44	56.72	10.68		15.75				
	4-Wire Copper Loop/Short - without manual service inquiry and facility reservation - Zone 2		2	UCL	UCL4W	18.84	119.56	81.44	56.72	10.68		15.75				
	4-Wire Copper Loop/Short - without manual service inquiry and facility reservation - Zone 3		3	UCL	UCL4W	21.33	119.56	81.44	56.72	10.68		15.75				

CATEGORY		RATE ELEMENTS	Interim	Zone	BCS	USOC	RATES($)					Svc Order Submitted Elec per LSR	Svc Order Submitted Manually per LSR	Incremental Charge - Manual Svc Order vs. Electronic-1st	Incremental Charge - Manual Svc Order vs. Electronic-Add'l	Incremental Charge - Manual Svc Order vs. Electronic-Disc 1st	Incremental Charge - Manual Svc Order vs. Electronic-Disc Add'l
							Rec	Nonrecurring		Nonrecurring Disconnect		OSS Rates($)					
								First	Add'l	First	Add'l	SOMEC	SOMAN	SOMAN	SOMAN	SOMAN	SOMAN
		4-Wire Copper Loop/Short - without manual service inquiry and facility reservation - Zone 4		4	UCL	UCL4W	21.33	119.56	81.44	56.72	10.68		15.75				
		Order Coordination for Unbundled Copper Loops (per loop)			UCL	UCLMC		8.20	8.20								
		4-Wire Unbundled Copper Loop/Long - includes manual svc. inquiry and facility reservation - Zone 1		1	UCL	UCL4L	54.72	144.68	94.22	56.72	10.68		15.75				
		4-Wire Unbundled Copper Loop/Long - includes manual svc. inquiry and facility reservation - Zone 2		2	UCL	UCL4L	97.47	144.68	94.22	56.72	10.68		15.75				
		4-Wire Unbundled Copper Loop/Long - includes manual svc. inquiry and facility reservation - Zone 3		3	UCL	UCL4L	106.06	144.68	94.22	56.72	10.68		15.75				
		4-Wire Unbundled Copper Loop/Long - includes manual svc. inquiry and facility reservation - Zone 4		4	UCL	UCL4L	106.06	144.68	94.22	56.72	10.68		15.75				
		Order Coordination for Unbundled Copper Loops (per loop)			UCL	UCLMC		8.20	8.20								
		4-Wire Unbundled Copper Loop/Long - without manual svc. inquiry and facility reservation - Zone 1		1	UCL	UCL4O	54.72	119.56	81.44	56.72	10.68		15.75				
		4-Wire Unbundled Copper Loop/Long - without manual svc. inquiry and facility reservation - Zone 2		2	UCL	UCL4O	97.47	119.56	81.44	56.72	10.68		15.75				
		4-Wire Unbundled Copper Loop/Long - without manual svc. inquiry and facility reservation - Zone 3		3	UCL	UCL4O	106.06	119.56	81.44	56.72	10.68		15.75				
		4-Wire Unbundled Copper Loop/Long - without manual service inquiry and facility reservation - Zone 4		4	UCL	UCL4O	106.06	119.56	81.44	56.72	10.68		15.75				
		Order Coordination for Unbundled Copper Loops (per loop)			UCL	UCLMC		8.20	8.20								
		CLEC to CLEC Conversion Charge without outside dispatch (UCL-Des)			UCL	UREWO		95.21	42.40				15.75				
LOOP MODIFICATION																	
		Unbundled Loop Modification, Removal of Load Coils - 2 Wire pair less than or equal to 18k ft			UAL, UHL, UCL, UEQ, ULS, UEA, UEANL, UDL, UDC, UDN, UDL, USL	ULM2L		32.57	32.57				15.75				
		Unbundled Loop Modification, Removal of Load Coils - 2 wire greater than 18k ft			UCL, ULS	ULM2G		171.49	171.49				15.75				
		Unbundled Loop Modification Removal of Load Coils - 4 Wire less than or equal to 18K ft			UHL, UCL	ULM4L		32.57	32.57				15.75				
		Unbundled Loop Modification Removal of Load Coils - 4 Wire pair greater than 18k ft			UCL	ULM4G		171.49	171.49				15.75				
		Unbundled Loop Modification Removal of Bridged Tap Removal, per unbundled loop			UAL, UHL, UCL, UEQ, UEF, ULS, UEA, UEANL, UDL, UDC, UDN, UDL, USL	ULMBT		32.59	32.59				15.75				
SUB-LOOPS																	
	Sub-Loop Distribution																
		Sub-Loop - Per Cross Box Location - CLEC Feeder Facility Set-Up	I		UEANL	USBSA		259.69					15.75				
		Sub-Loop - Per Cross Box Location - Per 25 Pair Panel Set-Up	I		UEANL	USBSB		22.77					15.75				
		Sub-Loop - Per Building Equipment Room - CLEC Feeder Facility Set-Up	I		UEANL	USBSC		178.47					15.75				
		Sub-Loop - Per Building Equipment Room - Per 25 Pair Panel Set-Up	I		UEANL	USBSD		56.39					15.75				
		Sub-Loop Distribution Per 2-Wire Analog Voice Grade Loop - Zone 1	I	1	UEANL	USBN2	7.15	66.18	31.14	45.36	6.71		15.75				
		Sub-Loop Distribution Per 2-Wire Analog Voice Grade Loop - Zone 2	I	2	UEANL	USBN2	9.51	66.18	31.14	45.36	6.71		15.75				
		Sub-Loop Distribution Per 2-Wire Analog Voice Grade Loop - Zone 3	I	3	UEANL	USBN2	12.45	66.18	31.14	45.36	6.71		15.75				
		Sub-Loop Distribution Per 2-Wire Analog Voice Grade Loop - Zone 4		4	UEANL	USBN2	18.26	66.18	31.14	45.36	6.71		15.75				
		Order Coordination for Unbundled Sub-Loops, per sub-loop pair			UEANL	USBMC		8.20	8.20								

CATEGORY	RATE ELEMENTS	Interim	Zone	BCS	USOC	RATES($) Rec	Nonrecurring First	Nonrecurring Add'l	Nonrecurring Disconnect First	Nonrecurring Disconnect Add'l	Svc Order Submitted Elec per LSR	Svc Order Submitted Manually per LSR	Incremental Charge - Manual Svc Order vs. Electronic-1st	Incremental Charge - Manual Svc Order vs. Electronic-Add'l	Incremental Charge - Manual Svc Order vs. Electronic-Disc 1st	Incremental Charge - Manual Svc Order vs. Electronic-Disc Add'l
											OSS Rates($)					
											SOMEC	SOMAN	SOMAN	SOMAN	SOMAN	SOMAN
	Sub-Loop Distribution Per 4-Wire Analog Voice Grade Loop - Zone 1		1	UEANL	USBN4	7.30	79.49	44.45	51.27	9.35		15.75				
	Sub-Loop Distribution Per 4-Wire Analog Voice Grade Loop - Zone 2		2	UEANL	USBN4	13.92	79.49	44.45	51.27	9.35		15.75				
	Sub-Loop Distribution Per 4-Wire Analog Voice Grade Loop - Zone 3		3	UEANL	USBN4	16.73	79.49	44.45	51.27	9.35		15.75				
	Sub-Loop Distribution Per 4-Wire Analog Voice Grade Loop - Zone 4		4	UEANL	USBN4	16.73	79.49	44.45	51.27	9.35		15.75				
	Order Coordination for Unbundled Sub-Loops, per sub-loop pair			UEANL	USBMC		8.20	8.20				15.75				
	Sub-Loop 2-Wire Intrabuilding Network Cable (INC)	I		UEANL	USBR2	2.29	53.32	18.28	45.36	6.71		15.75				
	Order Coordination for Unbundled Sub-Loops, per sub-loop pair			UEANL	USBMC		8.20	8.20								
	Sub-Loop 4-Wire Intrabuilding Network Cable (INC)	I		UEANL	USBR4	4.40	59.60	24.55	51.27	9.35		15.75				
	Order Coordination for Unbundled Sub-Loops, per sub-loop pair			UEANL	USBMC		8.20	8.20								
	2 Wire Copper Unbundled Sub-Loop Distribution - Zone 1	I	1	UEF	UCS2X	6.06	66.18	31.14	45.36	6.71		15.75				
	2 Wire Copper Unbundled Sub-Loop Distribution - Zone 2	I	2	UEF	UCS2X	7.09	66.18	31.14	45.36	6.71		15.75				
	2 Wire Copper Unbundled Sub-Loop Distribution - Zone 3	I	3	UEF	UCS2X	8.16	66.18	31.14	45.36	6.71		15.75				
	2 Wire Copper Unbundled Sub-Loop Distribution - Zone 4		4	UEF	UCS2X	9.90	66.18	31.14	45.36	6.71		15.75				
	Order Coordination for Unbundled Sub-Loops, per sub-loop pair			UEF	USBMC		8.20	8.20								
	4 Wire Copper Unbundled Sub-Loop Distribution - Zone 1	I	1	UEF	UCS4X	5.10	79.49	44.45	51.27	9.35		15.75				
	4 Wire Copper Unbundled Sub-Loop Distribution - Zone 2	I	2	UEF	UCS4X	9.11	79.49	44.45	51.27	9.35		15.75				
	4 Wire Copper Unbundled Sub-Loop Distribution - Zone 3	I	3	UEF	UCS4X	14.00	79.49	44.45	51.27	9.35		15.75				
	4 Wire Copper Unbundled Sub-Loop Distribution - Zone 4		4	UEF	UCS4X	14.00	79.49	44.45	51.27	9.35		15.75				
	Order Coordination for Unbundled Sub-Loops, per sub-loop pair			UEF	USBMC		8.20	8.20								
Unbundled Sub-Loop Modification																
	Unbundled Sub-Loop Modification - 2-W Copper Dist Load Coil/Equip Removal per 2-W PR			UEF	ULM2X		176.80	5.13				15.75				
	Unbundled Sub-loop Modification - 4-W Copper Dist Load Coil/Equip Removal per 4-W PR			UEF	ULM4X		176.80	5.13				15.75				
	Unbundled Sub-loop Modification - 2-w/4-w Copper Dist Bridged Tap Removal, per PR unloaded			UEF	ULM4T		279.81	6.15				15.75				
Unbundled Network Terminating Wire (UNTW)																
	Unbundled Network Terminating Wire (UNTW) per Pair			UENTW	UENPP	0.3366	30.55					15.75				
Network Interface Device (NID)																
	Network Interface Device (NID) - 1-2 lines			UENTW	UND12		43.84	28.90				15.75				
	Network Interface Device (NID) - 1-6 lines			UENTW	UND16		65.30	50.36				15.75				
	Network Interface Device Cross Connect - 2 W			UENTW	UNDC2		5.94	5.94				15.75				
	Network Interface Device Cross Connect - 4W			UENTW	UNDC4		5.94	5.94				15.75				
SUB-LOOPS																
Sub-Loop Feeder																
	USL-Feeder, DS0 Set-up per Cross Box location - CLEC Distribution Facility set-up			UEA, UDN,UCL,UDL,UDC	USBFW		259.69					15.75				
	USL Feeder - DS0 Set-up per Cross Box location - per 25 pair set-up			UEA, UDN,UCL,UDL,UDC	USBFX		22.77	22.77				15.75				
	USL Feeder DS1 Set-up at DSX location, per DS1 termination			USL	USBFZ		534.46	11.30				15.75				
	Unbundled Sub-Loop Feeder Loop, 2 Wire Ground Start, Voice Grade - Zone 1		1	UEA	USBFA	7.98	93.23	56.50	54.45	13.51		15.75				
	Unbundled Sub-Loop Feeder Loop, 2 Wire Ground-Start, Voice Grade - Zone 2		2	UEA	USBFA	10.39	93.23	56.50	54.45	13.51		15.75				
	Unbundled Sub-Loop Feeder Loop, Per 2 Wire Ground-Start, Voice Grade - Zone 3		3	UEA	USBFA	16.11	93.23	56.50	54.45	13.51		15.75				
	Unbundled Sub-Loop Feeder Loop, 2 Wire Ground-Start Loop, Voice Grade - Zone 4		4	UEA	USBFA	28.37	93.23	56.50	54.45	13.51		15.75				
	Order Coordination for Specified Conversion Time, per LSR			UEA	OCOSL		18.19									

CATEGORY		RATE ELEMENTS	Interim	Zone	BCS	USOC	RATES($)					Svc Order Submitted Elec per LSR	Svc Order Submitted Manually per LSR	Incremental Charge - Manual Svc Order vs. Electronic-1st	Incremental Charge - Manual Svc Order vs. Electronic-Add'l	Incremental Charge - Manual Svc Order vs. Electronic-Disc 1st	Incremental Charge - Manual Svc Order vs. Electronic-Disc Add'l
							Rec	Nonrecurring		Nonrecurring Disconnect		OSS Rates($)					
								First	Add'l	First	Add'l	SOMEC	SOMAN	SOMAN	SOMAN	SOMAN	SOMAN
		Unbundlde Sub-Loop Feeder Loop, 2 Wire Loop-Start, Voice Grade - Zone 1		1	UEA	USBFB	7.98	93.23	56.50	54.45	13.51		15.75				
		Unbundled Sub-Loop Feeder Loop, 2 Wire Loop-Start, Voice Grade - Zone 2		2	UEA	USBFB	10.39	93.23	56.50	54.45	13.51		15.75				
		Unbundled Sub-Loop Feeder Loop, 2 Wire Start Loop, Voice Grade - Zone 3		3	UEA	USBFB	16.11	93.23	56.50	54.45	13.51		15.75				
		Unbundled Sub-Loop Feeder Loop, 2 Wire Loop-Start, Voice Grade - Zone 4		4	UEA	USBFB	28.37	93.23	56.50	54.45	13.51		15.75				
		Order Coordination for Specified Time Conversion, per LSR			UEA	OCOSL		18.19									
		Unbundled Sub-Loop Feeder Loop, 2 Wire Reverse Battery, Voice Grade - Zone 1		1	UEA	USBFC	7.98	93.23	56.50	54.45	13.51		15.75				
		Unbundled Sub-Loop Feeder Loop, 2 Wire Reverse Battery, Voice Grade - Zone 2		2	UEA	USBFC	10.39	93.23	56.50	54.45	13.51		15.75				
		Unbundled Sub-Loop Feeder Loop, 2 Wire Reverse Battery, Voice Grade - Zone 3		3	UEA	USBFC	16.11	93.23	56.50	54.45	13.51		15.75				
		Unbundled Sub-Loop Feeder Loop, 2 Wire Reverse Battery, Voice Grade - Zone 4		4	UEA	USBFC	28.37	93.23	56.50	54.45	13.51		15.75				
		Order Coordination For Specified Conversion Time, per LSR			UEA	OCOSL		18.19									
		Unbundled Sub-Loop Feeder Loop, 4 Wire Ground-Start, Voice Grade - Zone 1		1	UEA	USBFD	21.69	107.71	70.03	63.68	17.64		15.75				
		Unbundled Sub-Loop Feeder Loop, 4 Wire Ground-Start, Voice Grade - Zone 2		2	UEA	USBFD	26.06	107.71	70.03	63.68	17.64		15.75				
		Unbundled Sub-Loop Feeder Loop, 4 Wire Ground Start, Voice Grade - Zone 3		3	UEA	USBFD	34.77	107.71	70.03	63.68	17.64		15.75				
		Unbundled Sub-Loop Feeder Loop, 4 Wire Ground-Start, Voice Grade - Zone 4		4	UEA	USBFD	34.77	107.71	70.03	63.68	17.64		15.75				
		Order Coordination For Specified Conversion Time, Per LSR			UEA	OCOSL		18.19									
		Unbundled Sub-Loop Feeder Loop, 4 Wire Loop-Start, Voice Grade - Zone 1		1	UEA	USBFE	21.69	107.71	70.03	63.68	17.64		15.75				
		Unbundled Sub-Loop Feeder Loop, 4 Wire Loop-Start, Voice Grade - Zone 2		2	UEA	USBFE	26.06	107.71	70.03	63.68	17.64		15.75				
		Unbundled Sub-Loop Feeder Loop, 4 Wire Loop-Start, Voice Grade - Zone 3		3	UEA	USBFE	34.77	107.71	70.03	63.68	17.64		15.75				
		Sub-Loop Feeder - Per 4-Wire Analog Voice Grade Loop-Start Loop - Zone 4		4	UEA	USBFE	34.77	107.71	70.03	63.68	17.64		15.75				
		Order Coordination For Specified Conversion Time, Per LSR			UEA	OCOSL		18.19									
		Unbundled Sub-Loop Feeder Loop, 2 Wire ISDN BRI - Zone 1		1	UDN	USBFF	14.60	106.46	68.78	55.58	13.13		15.75				
		Unbundled Sub-Loop Feeder Loop, 2-Wire ISDN BRI - Zone 2		2	UDN	USBFF	18.78	106.46	68.78	55.58	13.13		15.75				
		Unbundled Sub-Loop Feeder Loop, 2-Wire ISDN BRI - Zone 3		3	UDN	USBFF	25.47	106.46	68.78	55.58	13.13		15.75				
		Unbundled Sub-Loop Feeder Loop, 2-Wire ISDN BRI - Zone 4		4	UDN	USBFF	41.41	106.46	68.78	55.58	13.13		15.75				
		Order Coordination For Specified Conversion Time, Per LSR			UDN	OCOSL		18.19									
		Unbundled Sub-Loop Feeder, 2 Wire UDC (IDSL compatible)		1	UDC	USBFS	14.60	106.46	68.78	55.58	13.13		15.75				
		Unbundled Sub-Loop Feeder, 2 Wire UDC (IDSL compatible)		2	UDC	USBFS	18.78	106.46	68.78	55.58	13.13		15.75				
		Unbundled Sub-Loop Feeder, 2 Wire UDC (IDSL compatible)		3	UDC	USBFS	25.47	106.46	68.78	55.58	13.13		15.75				
		Unbundled Sub-Loop Feeder, 2 Wire UDC (IDSL compatible)		4	UDC	USBFS	41.41	106.46	68.78	55.58	13.13		15.75				
		Unbundled Sub-Loop Feeder Loop, 4-Wire DS1 - Zone 1		1	USL	USBFG	55.19	101.97	64.29	63.68	17.64		15.75				
		Unbundled Sub-Loop Feeder Loop, 4-Wire DS1 - Zone 2		2	USL	USBFG	100.03	101.97	64.29	63.68	17.64		15.75				
		Unbundled Sub-Loop Feeder Loop, 4-Wire DS1 - Zone 3		3	USL	USBFG	183.66	101.97	64.29	63.68	17.64		15.75				
		Unbundled Sub-Loop Feeder Loop, 4-Wire DS1 - Zone 4		4	USL	USBFG	430.04	101.97	64.29	63.68	17.64		15.75				
		Order Coordination For Specified Conversion Time, Per LSR			USL	OCOSL		18.19									
		Unbundled Sub-Loop Feeder Loop, 2-Wire Copper Loop - Zone 1		1	UCL	USBFH	5.88	84.27	46.59	53.14	10.70		15.75				
		Unbundled Sub-Loop Feeder Loop, 2-Wire Copper Loop - Zone 2		2	UCL	USBFH	5.21	84.27	46.59	53.14	10.70		15.75				
		Unbundled Sub-Loop Feeder Loop, 2-Wire Copper Loop - Zone 3		3	UCL	USBFH	4.40	84.27	46.59	53.14	10.70		15.75				
		Unbundled Sub-Loop Feeder, 2-Wire Copper Loop - Zone 4		4	UCL	USBFH	3.63	84.27	46.59	53.14	10.70		15.75				
		Order Coordination For Specified Conversion Time, per LSR			UCL	OCOSL		18.19									
		Sub-Loop Feeder - Per 4-Wire Copper Loop - Zone 1		1	UCL	USBFJ	13.49	101.58	63.90	59.71	13.67		15.75				

CATEGORY	RATE ELEMENTS	Interim	Zone	BCS	USOC	RATES($) Rec	Nonrecurring First	Nonrecurring Add'l	Nonrecurring Disconnect First	Nonrecurring Disconnect Add'l	Svc Order Submitted Elec per LSR	Svc Order Submitted Manually per LSR	Incremental Charge - Manual Svc Order vs. Electronic-1st	Incremental Charge - Manual Svc Order vs. Electronic-Add'l	Incremental Charge - Manual Svc Order vs. Electronic-Disc 1st	Incremental Charge - Manual Svc Order vs. Electronic-Disc Add'l
											OSS Rates($)					
											SOMEC	SOMAN	SOMAN	SOMAN	SOMAN	SOMAN
	Sub-Loop Feeder - Per 4-Wire Copper Loop - Zone 2		2	UCL	USBFJ	10.96	101.58	63.90	59.71	13.67		15.75				
	Sub-Loop Feeder - Per 4-Wire Copper Loop - Zone 3		3	UCL	USBFJ	8.59	101.58	63.90	59.71	13.67		15.75				
	Sub-Loop Feeder - Per 4-Wire Copper Loop - Zone 4		4	UCL	USBFJ	8.59	101.58	63.90	59.71	13.67		15.75				
	Order Coordination For Specified Conversion Time, per LSR			UCL	OCOSL		18.19									
	Sub-Loop Feeder - Per 4-Wire 19.2 Kbps Digital Grade Loop		1	UDL	USBFN	22.89	101.97	64.29	63.68	17.64		15.75				
	Sub-Loop Feeder - Per 4-Wire 19.2 Kbps Digital Grade Loop		2	UDL	USBFN	25.11	101.97	64.29	63.68	17.64		15.75				
	Sub-Loop Feeder - Per 4-Wire 19.2 Kbps Digital Grade Loop		3	UDL	USBFN	30.84	101.97	64.29	63.68	17.64		15.75				
	Sub-Loop Feeder - Per 4-Wire 19.2 Kbps Digital Grade Loop		4	UDL	USBFN	41.05	101.97	64.29	63.68	17.64		15.75				
	Sub-Loop Feeder - Per 4-Wire 56 Kbps Digital Grade Loop - Zone 1		1	UDL	USBFO	22.89	101.97	64.29	63.68	17.64		15.75				
	Sub-Loop Feeder - Per 4-Wire 56 Kbps Digital Grade Loop - Zone 2		2	UDL	USBFO	25.11	101.97	64.29	63.68	17.64		15.75				
	Sub-Loop Feeder - Per 4-Wire 56 Kbps Digital Grade Loop - Zone 3		3	UDL	USBFO	30.84	101.97	64.29	63.68	17.64		15.75				
	Sub-Loop Feeder - Per 4-Wire 56 Kbps Digital Grade Loop - Zone 4		4	UDL	USBFO	41.05	101.97	64.29	63.68	17.64		15.75				
	Order Coordination For Specified Time Conversion, per LSR			UDL	OCOSL		18.19									
	Sub-Loop Feeder - Per 4-Wire 64 Kbps Digital Grade Loop - Zone 1		1	UDL	USBFP	22.89	101.97	64.29	63.68	17.64		15.75				
	Sub-Loop Feeder - Per 4-Wire 64 Kbps Digital Grade Loop - Zone 2		2	UDL	USBFP	25.11	101.97	64.29	63.68	17.64		15.75				
	Sub-Loop Feeder - Per 4-Wire 64 Kbps Digital Grade Loop - Zone 3		3	UDL	USBFP	30.84	101.97	64.29	63.68	17.64		15.75				
	Sub-Loop Feeder - Per 4-Wire 64 Kbps Digital Grade Loop - Zone 4		4	UDL	USBFP	41.05	101.97	64.29	63.68	17.64		15.75				
	Order Coordination For Specified Conversion Time, per LSR			UDL	OCOSL		18.19									
SUB-LOOPS																
Sub-Loop Feeder																
	Sub Loop Feeder - DS3 - Per Mile Per Month			UE3	1L5SL	18.88										
	Sub Loop Feeder - DS3 - Facility Termination Per Month			UE3	USBF1	349.41	3,380.00	406.45	157.96	89.54		15.75				
	Sub Loop Feeder – STS-1 – Per Mile Per Month			UDLSX	1L5SL	18.88										
	Sub Loop Feeder - STS-1 - Facility Termination Per Month			UDLSX	USBF7	376.07	3,380.00	406.45	157.96	89.54		15.75				
	Sub Loop Feeder – OC-3 – Per Mile Per Month			UDLO3	1L5SL	14.33										
	Sub Loop Feeder - OC-3 - Facility Termination Protection Per Month			UDLO3	USBF5	58.63										
	Sub Loop Feeder - OC-3 - Facility Termination Per Month			UDLO3	USBF2	569.22	3,380.00	406.45	157.96	89.54		15.75				
	Sub Loop Feeder - OC-12 - Per Mile Per Month			UDL12	1L5SL	17.63										
	Sub Loop Feeder - OC-12 - Facility Termination Protection Per Month			UDL12	USBF6	662.39										
	Sub Loop Feeder - OC-12 - Facility Termination Per Month			UDL12	USBF3	1,795.00	3,380.00	406.45	157.96	89.54		15.75				
	Sub Loop Feeder - OC-48 - Per Mile Per Month			UDL48	1L5SL	57.83										
	Sub Loop Feeder - OC-48 - Facility Termination Protection Per Month			UDL48	USBF9	331.52										
	Sub Loop Feeder - OC-48 - Facility Termination Per Month			UDL48	USBF4	1,545.00	3,565.00	406.45	157.96	89.54		15.75				
	Sub Loop Feeder - OC-12 Interface On OC-48			UDL48	USBF8	374.04	787.04	406.45	157.96	89.54		15.75				
UNBUNDLED LOOP CONCENTRATION																
	Unbundled Loop Concentration - System A (TR008)			ULC	UCT8A	363..67	327.30	327.30				15.75				
	Unbundled Loop Concentration - System B (TR008)			ULC	UCT8B	47.56	136.37	136.37				15.75				
	Unbundled Loop Concentration - System A (TR303)			ULC	UCT3A	397.35	327.30	327.30				15.75				
	Unbundled Loop Concentration - System B (TR303)			ULC	UCT3B	80.15	136.37	136.37				15.75				
	Unbundled Loop Concentration - DS1 Loop Interface Card			ULC	UCTCO	4.52	63.65	46.34	17.31	4.85		15.75				
	Unbundled Loop Concentration - ISDN Loop Interface (Brite Card)			UDN	ULCC1	7.17	10.60	10.54	5.56	5.53		15.75				
	Unbundled Loop Concentration - UDC Loop Interface (Brite Card)			UDC	ULCCU	7.17	10.60	10.54	5.56	5.53		15.75				
	Unbundled Loop Concentration - -2 Wire Voice-Loop Start or Ground Start Loop Interface (POTS Card)			UEA	ULCC2	1.80	10.60	10.54	5.56	5.53		15.75				
	Unbundled Loop Concentration - 2 Wire Voice - Reverse Battery Loop Interface (SPOTS Card)			UEA	ULCCR	10.66	10.60	10.54	5.56	5.53		15.75				

UNBUNDLED NETWORK ELEMENTS - Mississippi														Attachment: 2		Exhibit: B	
CATEGORY		RATE ELEMENTS	Interim	Zone	BCS	USOC	RATES($)					Svc Order Submitted Elec per LSR	Svc Order Submitted Manually per LSR	Incremental Charge - Manual Svc Order vs. Electronic-1st	Incremental Charge - Manual Svc Order vs. Electronic-Add'l	Incremental Charge - Manual Svc Order vs. Electronic-Disc 1st	Incremental Charge - Manual Svc Order vs. Electronic-Disc Add'l
							Rec	Nonrecurring		Nonrecurring Disconnect		OSS Rates($)					
								First	Add'l	First	Add'l	SOMEC	SOMAN	SOMAN	SOMAN	SOMAN	SOMAN
		Unbundled Loop Concentration - 4 Wire Voice Loop Interface (Specials Card)			UEA	ULCC4	6.36	10.60	10.54	5.56	5.53		15.75				
		Unbundled Loop Concentration - TEST CIRCUIT Card			ULC	UCTTC	31.07	10.60	10.54	5.56	5.53		15.75				
		Unbundled Loop Concentration - Digital 19.2 Kbps Data Loop Interface			UDL	ULCC7	9.42	10.60	10.54	5.56	5.53		15.75				
		Unbundled Loop Concentration - Digital 56 Kbps Data Loop Interface			UDL	ULCC5	9.42	10.60	10.54	5.56	5.53		15.75				
		Unbundled Loop Concentration - Digital 64 Kbps Data Loop Interface			UDL	ULCC6	9.42	10.60	10.54	5.56	5.53		15.75				
UNE OTHER, PROVISIONING ONLY - NO RATE																	
		NID - Dispatch and Service Order for NID installation			UENTW	UNDBX											
		UNTW Circuit Id Establishment, Provisioning Only - No Rate			UENTW	UENCE											
		Unbundled Contract Name, Provisioning Only - No Rate			UEANL,UEF,UEQ,UENTW	UNECN											
UNE OTHER, PROVISIONING ONLY - NO RATE																	
		Unbundled Contact Name, Provisioning Only - no rate			UAL,UCL,UDC,UDL,UDN,UEA,UHL,ULC	UNECN	0.00	0.00									
		Unbundled Sub-Loop Feeder-2 Wire Cross Box Jumper - no rate			UEA,UDN,UCL,UDC	USBFQ	0.00	0.00									
		Unbundled Sub-Loop Feeder-4 Wire Cross Box Jumper - no rate			UEA,USL,UCL,UDL	USBFR	0.00	0.00									
		Unbundled DS1 Loop - Superframe Format Option - no rate			USL	CCOSF	0.00	0.00									
		Unbundled DS1 Loop - Expanded Superframe Format option - no rate			USL	CCOEF	0.00	0.00									
HIGH CAPACITY UNBUNDLED LOCAL LOOP																	
		High Capacity Unbundled Local Loop - DS3 - Per Mile per month			UE3	1L5ND	11.20										
		High Capacity Unbundled Local Loop - DS3 - Facility Termination per month			UE3	UE3PX	326.15	454.13	265.47	123.23	86.19		15.75				
		High Capacity Unbundled Local Loop - STS-1 - Per Mile per month			UDLSX	1L5ND	11.20										
		High Capacity Unbundled Local Loop - STS-1 - Facility Termination per month			UDLSX	UDLS1	338.55	454.13	265.47	123.23	86.19		15.75				
LOOP MAKE-UP																	
		Loop Makeup - Preordering Without Reservation, per working or spare facility queried (Manual).			UMK	UMKLW		24.12	24.12								
		Loop Makeup - Preordering With Reservation, per spare facility queried (Manual).			UMK	UMKLP		25.58	25.58								
		Loop Makeup--With or Without Reservation, per working or spare facility queried (Mechanized)			UMK	PSUMK		0.6652	0.6652								
HIGH FREQUENCY SPECTRUM																	
	SPLITTERS-CENTRAL OFFICE BASED																
		Line Sharing Splitter, per System 96 Line Capacity			ULS	ULSDA	186.67	189.89	0.00	178.41	0.00		15.75				
		Line Sharing Splitter, per System 24 Line Capacity			ULS	ULSDB	46.67	189.89	0.00	178.41	0.00		15.75				
		Line Sharing Splitter, Per System, 8 Line Capacity	I		ULS	ULSD8	15.55	189.89	0.00	178.41	0.00		15.75				
		Line Sharing-DLEC Owned Splitter in CO-CFA activaton-deactivation (per LSOD)			ULS	ULSDG		86.98		49.96			15.75				
	END USER ORDERING-CENTRAL OFFICE BASED-HIGH FREQUENCY SPECTRUM AKA LINE SHARING																
		Line Sharing - per Line Activation (BST Owned Splitter)			ULS	ULSDC	0.61	18.62	10.66	10.04	4.93		15.75				
		Line Sharing - per Subsequent Activity per Line Rearrangement(BST Owned Splitter)			ULS	ULSDS		16.48	8.24				15.75				
		Line Sharing - per Subsequent Activity per Line Rearrangement(DLEC Owned Splitter)			ULS	ULSCS		16.48	8.24				15.75				
		Line Sharing - per Line Activation (DLEC owned Splitter)	I		ULS	ULSCC	0.61	47.44	19.31	20.67	12.74		15.75				
		Line Splitting - per line activation DLEC owned splitter	R		UEPSR UEPSB	UREOS	0.61										
		Line Splitting - per line activation BST owned - physical	R		UEPSR UEPSB	UREBP	0.61	18.62	10.66	10.04	4.93		15.75				
		Line Splitting - per line activation BST owned - virtual	R		UEPSR UEPSB	UREBV	0.61	18.62	10.66	10.04	4.93		15.75				
UNBUNDLED DEDICATED TRANSPORT																	

UNBUNDLED NETWORK ELEMENTS - Mississippi

Attachment: 2 | Exhibit: B

CATEGORY	RATE ELEMENTS	Interim	Zone	BCS	USOC	RATES($) Rec	Nonrecurring First	Nonrecurring Add'l	Nonrecurring Disconnect First	Nonrecurring Disconnect Add'l	Svc Order Submitted Elec per LSR	Svc Order Submitted Manually per LSR	Incremental Charge - Manual Svc Order vs. Electronic- 1st	Incremental Charge - Manual Svc Order vs. Electronic- Add'l	Incremental Charge - Manual Svc Order vs. Electronic- Disc 1st	Incremental Charge - Manual Svc Order vs. Electronic- Disc Add'l
											OSS Rates($)					
											SOMEC	SOMAN	SOMAN	SOMAN	SOMAN	SOMAN
	NOTE: INTEROFFICE CHANNEL DEDICATED TRANSPORT - minimum billing period - below DS3=one month, DS3/STS-1=four months															
	INTEROFFICE CHANNEL - DEDICATED TRANSPORT															
	Interoffice Channel - Dedicated Transport - 2-Wire Voice Grade - Per Mile per month			U1TVX	1L5XX	0.0098										
	Interoffice Channel - Dedicated Transport- 2- Wire Voice Grade - Facility Termination per month			U1TVX	U1TV2	22.52	40.77	27.57	17.26	7.11		15.75				
	Interoffice Channel - Dedicated Transpor t- 2-Wire Voice Grade Rev Bat. - Per Mile per month			U1TVX	1L5XX	0.0098										
	Interoffice Channel - Dedicated Transport- 2- Wire VG Rev Bat. - Facility Termination per month			U1TVX	U1TR2	22.52	40.77	27.57	17.26	7.11		15.75				
	Interoffice Channel - Dedicated Transport - 4-Wire Voice Grade - Per Mile per month			U1TVX	1L5XX	0.0098										
	Interoffice Channel - Dedicated Transport - 4- Wire Voice Grade - Facility Termination per month			U1TVX	U1TV4	19.79	40.77	27.57	17.26	7.11		15.75				
	Interoffice Channel - Dedicated Transport - 56 kbps - per mile per month			U1TDX	1L5XX	0.0098										
	Interoffice Channel - Dedicated Transport - 56 kbps - Facility Termination per month			U1TDX	U1TD5	15.68	40.78	27.57	17.26	7.11		15.75				
	Interoffice Channel - Dedicated Transport - 64 kbps - per mile per month			U1TDX	1L5XX	0.0098										
	Interoffice Channel - Dedicated Transport - 64 kbps - Facility Termination per month			U1TDX	U1TD6	15.68	40.78	27.57	17.26	7.11		15.75				
	Interoffice Channel - Dedicated Channel - DS1 - Per Mile per month			U1TD1	1L5XX	0.201										
	Interoffice Channel - Dedicated Tranport - DS1 - Facility Termination per month			U1TD1	U1TF1	57.33	89.79	82.28	16.86	14.90		15.75				
	Interoffice Channel - Dedicated Transport - DS3 - Per Mile per month			U1TD3	1L5XX	4.76										
	Interoffice Channel - Dedicated Transport - DS3 - Facility Termination per month			U1TD3	U1TF3	641.90	280.37	163.70	62.08	60.29		15.75				
	Interoffice Channel - Dedicated Transport - STS-1 - Per Mile per month			U1TS1	1L5XX	4.76										
	Interoffice Channel - Dedicated Transport - STS-1 - Facility Termination per month			U1TS1	U1TFS	644.21	280.37	163.70	62.08	60.29		15.75				
	LOCAL CHANNEL - DEDICATED TRANSPORT															
	NOTE: LOCAL CHANNEL DEDICATED TRANSPORT - minimum billing period - below DS3=one month, DS3/STS-1=four months															
	Local Channel - Dedicated - 2-Wire Voice Grade Per Month			ULDVX	ULDV2	14.91	194.22	33.36	37.79	3.30		15.75				
	Local Channel - Dedicated - 2-Wire Voice Grade Rev Bat per month			ULDVX	ULDR2	14.91	194.22	33.36	37.79	3.30		15.75				
	Local Channel - Dedicated - 4-Wire Voice Grade per month			UNDVX	ULDV4	15.99	194.66	33.80	38.27	3.78		15.75				
	Local Channel - Dedicated - DS1 per month - Zone 1		1	ULDD1	ULDF1	36.83	178.50	154.61	22.89	15.74		15.75				
	Local Channel - Dedicated - DS1 per month - Zone 2		2	ULDD1	ULDF1	35.99	178.50	154.61	22.89	15.74		15.75				
	Local Channel - Dedicated - DS1 per month - Zone 3		3	ULDD1	ULDF1	221.63	178.50	154.61	22.89	15.74		15.75				
	Local Channel - Dedicated - DS1 per month - Zone 4		4	ULDD1	ULDF1	221.63	178.50	154.61	22.89	15.74						
	Local Channel - Dedicated - DS3 - Per Mile per month			ULDD3	1L5NC	9.66										
	Local Channel - Dedicated - DS3 - Facility Termination per month			ULDD3	ULDF3	413.87	454.13	265.47	123.23	86.19		15.75				
	Local Channel - Dedicated - STS-1- Per Mile per month			ULDS1	1L5NC	9.66										
	Local Channel - Dedicated - STS-1 - Facility Termination per month			ULDS1	ULDFS	408.02	454.13	265.47	123.23	86.19		15.75				
MULTIPLEXERS																
	Channelization - DS1 to DS0 Channel System			UXTD1	MQ1	102.85	91.57	62.94	10.87	10.10		15.75				
	OCU-DP COCI (data) - DS1 to DS0 Channel System - per month (2.4-64kbs)			UDL	1D1DD	1.22	6.62	4.74				15.75				
	2-wire ISDN COCI (BRITE) - DS1 to DS0 Channel Systsem - per month			UDN	UC1CA	2.62	6.62	4.74				15.75				
	Voice Grade COCI - DS1 to DS0 Channel System - per month			UEA	1D1VG	0.5737	6.62	4.74				15.75				
	DS3 to DS1 Channel System per month			UXTD3	MQ3	170.63	179.17	94.52	34.30	32.82		15.75				
	STS1 to DS1 Channel System per month			UXTS1	MQ3	170.63	179.17	94.52	34.30	32.82		15.75				

UNBUNDLED NETWORK ELEMENTS - Mississippi														Attachment: 2		Exhibit: B	
CATEGORY		RATE ELEMENTS	Interim	Zone	BCS	USOC	RATES($)					Svc Order Submitted Elec per LSR	Svc Order Submitted Manually per LSR	Incremental Charge - Manual Svc Order vs. Electronic-1st	Incremental Charge - Manual Svc Order vs. Electronic-Add'l	Incremental Charge - Manual Svc Order vs. Electronic-Disc 1st	Incremental Charge - Manual Svc Order vs. Electronic-Disc Add'l
							Rec	Nonrecurring		Nonrecurring Disconnect		OSS Rates($)					
								First	Add'l	First	Add'l	SOMEC	SOMAN	SOMAN	SOMAN	SOMAN	SOMAN
		DS3 Interface Unit (DS1 COCI) used with Loop per month			USL	UC1D1	12.96	6.62	4.74				15.75				
		DS3 Interface Unit (DS1 COCI) used with Local Channel per month			ULDD1	UC1D1	12.96	6.62	4.74				15.75				
		DS3 Interface Unit (DS1 COCI) used with Interoffice Channel per month			U1TD1	UC1D1	12.96	6.62	4.74				15.75				
DARK FIBER																	
		Dark Fiber, Four Fiber Strands, Per Route Mile or Fraction Thereof per month - Local Channel			UDF	1L5DC	59.95										
		NRC Dark Fiber - Local Channel			UDF	UDFC4		642.79	138.67	326.97	203.85		15.75				
		Dark Fiber, Four Fiber Strands, Per Route Mile or Fraction Thereof per month - Interoffice Channel			UDF	1L5DF	28.27										
		NRC Dark Fiber - Interoffice Channel			UDF	UDF14		642.79	138.67	326.97	203.85		15.75				
		Dark Fiber, Four Fiber Strands, Per Route Mile or Fraction Thereof per month - Local Loop			UDF	1L5DL	59.95										
		NRC Dark Fiber - Local Loop			UDF	UDFL4		642.79	138.67	326.97	203.85		15.75				
TRANSPORT OTHER																	
	Optional Features & Functions:																
8XX ACCESS TEN DIGIT SCREENING																	
		8XX Access Ten Digit Screening, Per Call			OHD		0.0006216										
		8XX Access Ten Digit Screening, Reservation Charge Per 8XX Number Reserved			OHD	N8R1X		2.60	0.44				15.75				
		8XX Access Ten Digit Screening, Per 8XX No. Established W/O POTS Translations			OHD			5.97	0.81	4.60	0.54		15.75				
		8XX Access Ten Digit Screening, Per 8XX No. Established With POTS Translations			OHD	N8FTX		5.97	0.81	4.60	0.54		15.75				
		8XX Access Ten Digit Screening, Customized Area of Service Per 8XX Number			OHD	N8FCX		2.60	1.30				15.75				
		8XX Access Ten Digit Screening, Multiple InterLATA CXR Routing Per CXR Requested Per 8XX No.			OHD	N8FMX		3.04	1.74				15.75				
		8XX Access Ten Digit Screening, Change Charge Per Request			OHD	N8FAX		3.04	0.44				15.75				
		8XX Access Ten Digit Screening, Call Handling and Destination Features			OHD	N8FDX		2.60					15.75				
		8XX Access Ten Digit Screening, w/ 8FL No. Delivery, per query			OHD		0.0006216										
		8XX Access Ten Digit Screening, w/ POTS No. Delivery, per query			OHD		0.0006216										
LINE INFORMATION DATA BASE ACCESS (LIDB)																	
		LIDB Common Transport Per Query			OQT		0.0000197										
		LIDB Validation Per Query			OQU		0.0137053										
		LIDB Originating Point Code Establishment or Change			OQT, OQU	NRPBX		34.52	34.52	42.33	42.33		15.75				
SIGNALING (CCS7)																	
		CCS7 Signaling Termination, Per STP Port			UDB	PT8SX	132.21										
		CCS7 Signaling Usage, Per TCAP Message			UDB		0.0000597										
		CCS7 Signaling Connection, Per link (A link)			UDB	TPP++	16.55	35.74	35.74	16.53	16.53		15.75				
		CCS7 Signaling Connection, Per link (B link) (also known as D link)			UDB	TPP++	16.55	35.74	35.74	16.53	16.53		15.75				
		CCS7 Signaling Usage, Per ISUP Message			UDB		0.0000149										
		CCS7 Signaling Usage Surrogate, per link per LATA			UDB	STU56	683.55										
		CCS7 Signaling Point Code, per Originating Point Code Establishment or Change, per STP affected			UDB	CCAPO		29.18	29.18	35.78	35.78		15.75				
E911 SERVICE																	
		Local Channel - Dedicated - 2-wr Voice Grade					14.91	194.22	33.36	37.79	3.30		15.75				
		Interoffice Transport - Dedicated - 2-wr Voice Grade Per Mile					0.0098										
		Interoffice Transport - Dedicated - 2-wr Voice Grade Per Facility Termination					22.52	40.77	27.57	17.26	7.11		15.75				
		Local Channel - Dedicated - DS1 - Zone 1					36.83	178.50	154.61	22.89	15.74		15.75				
		Local Channel - Dedicated - DS1 - Zone 2					35.99	178.50	154.61	22.89	15.74		15.75				
		Local Channel - Dedicated - DS1 - Zone 3					221.63	178.50	154.61	22.89	15.74		15.75				
		Local Channel - Dedicated - DS1 - Zone 4					221.63	178.50	154.61	22.89	15.74		15.75				

UNBUNDLED NETWORK ELEMENTS - Mississippi														Attachment: 2		Exhibit: B	
CATEGORY		RATE ELEMENTS	Interim	Zone	BCS	USOC	RATES($)					Svc Order Submitted Elec per LSR	Svc Order Submitted Manually per LSR	Incremental Charge - Manual Svc Order vs. Electronic-1st	Incremental Charge - Manual Svc Order vs. Electronic-Add'l	Incremental Charge - Manual Svc Order vs. Electronic-Disc 1st	Incremental Charge - Manual Svc Order vs. Electronic-Disc Add'l
							Rec	Nonrecurring		Nonrecurring Disconnect		OSS Rates($)					
								First	Add'l	First	Add'l	SOMEC	SOMAN	SOMAN	SOMAN	SOMAN	SOMAN
		Interoffice Transport - Dedicated - DS1 Per Mile					0.2010										
		Interoffice Transport - Dedicated - DS1 Per Facility Termination					57.33	89.79	82.28	16.86	14.90		15.75				
													15.75				
CALLING NAME (CNAM) SERVICE																	
		CNAM for DB Owners, Per Query			OQV		0.0010231										
		CNAM for Non DB Owners, Per Query			OQV		0.0010231										
		CNAM For DB Owners - Service Establishment			OQV			23.09	23.09	21.23	21.23		15.75				
		CNAM For Non DB Owners - Service Establishment			OQV			23.09	23.09	21.23	21.23		15.75				
		CNAM For DB Owners - Service Provisioning With Point Code Establishment			OQV			996.62	737.08	270.49	198.89		15.75				
		CNAM For Non DB Owners - Service Provisioning With Point Code Establishment			OQV			344.32	246.56	276.85	198.89		15.75				
LNP Query Service																	
		LNP Charge Per query			OQV		0.0008477										
		LNP Service Establishment Manual						12.59	12.59	11.58	11.58		15.75				
		LNP Service Provisioning with Point Code Establishment						596.94	304.96	270.49	198.89		15.75				
OPERATOR CALL PROCESSING																	
		Oper. Call Processing - Oper. Provided, Per Min. - Using BST LIDB					1.20										
		Oper. Call Processing - Oper. Provided, Per Min. - Using Foreign LIDB					1.24										
		Oper. Call Processing - Fully Automated, per Call - Using BST LIDB					0.20										
		Oper. Call Processing - Fully Automated, per Call - Using Foreign LIDB					0.20										
INWARD OPERATOR SERVICES																	
		Inward Operator Services - Verification, Per Minute					1.15										
		Inward Operator Services - Verification and Emergency Interrupt - Per Minute					1.15										
BRANDING - OPERATOR CALL PROCESSING																	
		Recording of Custom Branded OA Announcement				CBAOS		7,000.00	7,000.00				15.75				
		Loading of Custom Branded OA Announcement per shelf/NAV				CBAOL		500.00	500.00				15.75				
	Unbranding via OLNS for UNEP CLEC																
		Loading of OA per OCN (Regional)						1,200.00	1,200.00				15.75				
DIRECTORY ASSISTANCE SERVICES																	
	DIRECTORY ASSISTANCE ACCESS SERVICE																
		Directory Assistance Access Service Calls, Charge Per Call					0.275										
	DIRECTORY ASSISTANCE CALL COMPLETION ACCESS SERVICE (DACC)																
		Directory Assistance Call Completion Access Service (DACC), Per Call Attempt					0.10										
	DIRECTORY TRANSPORT																
DIRECTORY ASSISTANCE SERVICES																	
	DIRECTORY ASSISTANCE DATA BASE SERVICE (DADS)																
		Directory Assistance Data Base Service Charge Per Listing					0.04										
		Directory Assistance Data Base Service, per month				DBSOF	150.00										
BRANDING - DIRECTORY ASSISTANCE																	
	Facility Based CLEC																
		Recording and Provisioning of DA Custom Branded Announcement			AMT	CBADA		6,000.00	6,000.00								
		Loading of Custom Branded Announcement per DRAM Card/Switch			AMT	CBADC		1,170.00	1,170.00								
	UNEP CLEC																
		Recording of DA Custom Branded Announcement						3,000.00	3,000.00								
		Loading of DA Custom Branded Announcement per DRAM Card/Switch per OCN						1,170.00	1,170.00								
	Unbranding via OLNS for UNEP CLEC																
		Loading of DA per OCN (1 OCN per Order)						420.00	420.00								
		Loading of DA per Switch per OCN						16.00	16.00								

UNBUNDLED NETWORK ELEMENTS - Mississippi														Attachment: 2		Exhibit: B	
CATEGORY		RATE ELEMENTS	Interim	Zone	BCS	USOC	RATES($)					Svc Order Submitted Elec per LSR	Svc Order Submitted Manually per LSR	Incremental Charge - Manual Svc Order vs. Electronic-1st	Incremental Charge - Manual Svc Order vs. Electronic-Add'l	Incremental Charge - Manual Svc Order vs. Electronic-Disc 1st	Incremental Charge - Manual Svc Order vs. Electronic-Disc Add'l
							Rec	Nonrecurring		Nonrecurring Disconnect		OSS Rates($)					
								First	Add'l	First	Add'l	SOMEC	SOMAN	SOMAN	SOMAN	SOMAN	SOMAN
SELECTIVE ROUTING																	
		Selective Routing Per Unique Line Class Code Per Request Per Switch				USRCR		85.19	85.19	14.19	14.19		15.75				
VIRTUAL COLLOCATION																	
		Virtual Collocation - Application Cost			AMTFS	EAF		1,212.25		0.51							
		Virtual Collocation - Cable Installation Cost, per cable			AMTFS	ESPCX		926.27		22.62							
		Virtual Collocation - Floor Space, per sq. ft.			AMTFS	ESPVX	5.74										
		Virtual Collocation - Power, per breaker amp			AMTFS	ESPAX	7.33										
		Virtual Collocation - Cable Support Structure, per entrance cable			AMTFS	ESPSX	15.24										
		Virtual Collocation - 2-wire Cross Connects (loop)			UEANL,UEA,UDN,UDC,UAL,UHL,UCL,UEQ, AMTFS, UDL, UNCVX, UNCDX, UNCNX	UEAC2	0.0268	12.37	11.87	6.04	5.45		15.75				
		Virtual Collocation - 4-wire Cross Connects (loop)			UEA,UHL,UCL,UDL, AMTFS, UAL, UDN, UNCVX, UNCDX	UEAC4	0.0536	12.47	11.94	6.59	5.91		15.75				
		Virtual Collocation - 2-Fiber Cross Connects			AMTFS,UDL12, UDLO3, U1T48, U1T12, U1T03, ULDO3, ULD12, ULD48, UDF	CNC2F	2.91	21.01	15.29	7.61	6.10		15.75				
		Virtual Collocation - 4-Fiber Cross Connects			AMTFS,UDL12, UDLO3, U1T48, U1T12, U1T03, ULDO3, ULD12, ULD48, UDF	CNC4F	5.82	25.70	19.97	10.01	8.50		15.75				
		Virtual collocation - DS1 Cross Connects			USL,ULC,AMTFS, ULR, UXTD1, UNC1X, ULDD1, U1TD1, USLEL, UNLD1	CNC1X	1.14	22.16	16.02	6.60	5.97		15.75				
		Virtual collocation - DS3 Cross Connects			USL,ULC,AMTFS,UE3, U1TD3, UXTS1, UXTD3, UNC3X, UNCSX, ULDD3, U1TS1, ULDS1, UDLSX, UNLD3	CND3X	14.49	21.01	15.29	7.61	6.10		15.75				
		Virtual Collocation - Co-Carrier Cross Connects - Fiber Cable Support Structure, per linear foot			AMTFS	VE1CB	0.0025										
		Virtual Collocation - Co-Carrier Cross Connects - Copper/Coax Cable Support Structure, per linear ft			AMTFS	VE1CD	0.0037										
		Virtual Collocation - Co-Carrier Cross Connects - Fiber Cable Support Structure,per cable			AMTFS	VE1CC		534.65									
		Virtual Collocation - Co-Carrier Cross Connects - Copper/Coax Cable Support Structure, per cable			AMTFS	VE1CE		534.65									
		Virtual collocation - Security Escort - Basic, per half hour			AMTFS	SPTBX		17.02	10.79								
		Virtual collocation - Security Escort - Overtime, per half hour			AMTFS	SPTOX		22.17	13.94								
		Virtual collocation - Security Escort - Premium, per half hour			AMTFS	SPTPX		27.32	17.08								
		Virtual collocation - Maintenance in CO - Basic, per half hour			AMTFS	CTRLX		28.09	10.79								
		Virtual collocation - Maintenance in CO - Overtime, per half hour			AMTFS	SPTOM		36.69	13.94								
		Virtual collocation - Maintenance in CO - Premium per half hour			AMTFS	SPTPM		45.28	17.08								
VIRTUAL COLLOCATION																	
		Virtual Collocation - 2-wire Cross Connect, Exchange Port 2-Wire Analog - Res			UEPSR	VE1R2	0.0268	12.37	11.87	6.04	5.45		15.75				

UNBUNDLED NETWORK ELEMENTS - Mississippi														Attachment: 2		Exhibit: B	
CATEGORY		RATE ELEMENTS	Interim	Zone	BCS	USOC	RATES($)					Svc Order Submitted Elec per LSR	Svc Order Submitted Manually per LSR	Incremental Charge - Manual Svc Order vs. Electronic-1st	Incremental Charge - Manual Svc Order vs. Electronic-Add'l	Incremental Charge - Manual Svc Order vs. Electronic-Disc 1st	Incremental Charge - Manual Svc Order vs. Electronic-Disc Add'l
							Rec	Nonrecurring		Nonrecurring Disconnect		OSS Rates($)					
								First	Add'l	First	Add'l	SOMEC	SOMAN	SOMAN	SOMAN	SOMAN	SOMAN
		Virtual Collocation 2-Wire Cross Connect, Exchange Port 2-Wire Line Side PBX Trunk - Bus			UEPSP	VE1R2	0.0268	12.37	11.87	6.04	5.45		15.75				
		Virtual Collocation 2-Wire Cross Connect, Exchange Port 2-Wire Voice Grade PBX Trunk - Res			UEPSE	VE1R2	0.0268	12.37	11.87	6.04	5.45		15.75				
		Virtual Collocation 2-Wire Cross Connect, Exchange Port 2-Wire Analog Bus			UEPSB	VE1R2	0.0268	12.37	11.87	6.04	5.45		15.75				
		Virtual Collocation 2-Wire Cross Connect, Exchnage Port 2-Wire ISDN			UEPSX	VE1R2	0.0268	12.37	11.87	6.04	5.45		15.75				
		Virtual Collocation 2-Wire Cross Connect, Exchange Port 2-Wire ISDN			UEPTX	VE1R2	0.0268	12.37	11.87	6.04	5.45		15.75				
		Virtual Collocation 4-Wire Cross Connect, Exchange Port 4-Wire ISDN DS1			UEPEX	VE1R4	0.0536	12.47	11.94	6.59	5.91		15.75				
VIRTUAL COLLOCATION																	
		Virtual Collocation-2 Wire Cross Connects (Loop) for Line Splitting			UEPSR, UEPSB	VE1LS	0.0268	12.37	11.87	6.04	5.45		15.75				
AIN SELECTIVE CARRIER ROUTING																	
		Regional Service Establishment			SRC	SRCEC		101,685.12		8,640.51			15.75				
		End Office Establishment			SRC	SRCEO		167.49	167.49	1.71	1.71		15.75				
		Query NRC, per query			SRC		0.0030502										
AIN - BELLSOUTH AIN SMS ACCESS SERVICE																	
		AIN SMS Access Service - Service Establishment, Per State, Initial Setup			A1N	CAMSE		39.67	39.67	40.92	40.92		15.75				
		AIN SMS Access Service - Port Connection - Dial/Shared Access			A1N	CAMDP		7.87	7.87	9.14	9.14		15.75				
		AIN SMS Access Service - Port Connection - ISDN Access			A1N	CAM1P		7.87	7.87	9.14	9.14		15.75				
		AIN SMS Access Service - User Identification Codes - Per User ID Code			A1N	CAMAU		35.21	35.21	27.21	27.21		15.75				
		AIN SMS Access Service - Security Card, Per User ID Code, Initial or Replacement			A1N	CAMRC		42.13	42.13	11.78	11.78		15.75				
		AIN SMS Access Service - Storage, Per Unit (100 Kilobytes)					0.0021										
		AIN SMS Access Service - Session, Per Minute					0.5649										
		AIN SMS Access Service - Company Performed Session, Per Minute					0.8393										
AIN - BELLSOUTH AIN TOOLKIT SERVICE																	
		AIN Toolkit Service - Service Establishment Charge, Per State, Initial Setup			CAM	BAPSC		39.67	39.67	40.92	40.92		15.75				
		AIN Toolkit Service - Training Session, Per Customer				BAPVX		4,226.54	4,226.54				15.75				
		AIN Toolkit Service - Trigger Access Charge, Per Trigger, Per DN, Term. Attempt				BAPTT		7.87	7.87	9.14	9.14		15.75				
		AIN Toolkit Service - Trigger Access Charge, Per Trigger, Per DN, Off-Hook Delay				BAPTD		7.87	7.87	9.14	9.14		15.75				
		AIN Toolkit Service - Trigger Access Charge, Per Trigger, Per DN, Off-Hook Immediate				BAPTM		7.87	7.87	9.14	9.14		15.75				
		AIN Toolkit Service - Trigger Access Charge, Per Trigger, Per DN, 10-Digit PODP				BAPTO		34.67	34.67	14.44	14.44		15.75				
		AIN Toolkit Service - Trigger Access Charge, Per Trigger, Per DN, CDP				BAPTC		34.67	34.67	14.44	14.44		15.75				
		AIN Toolkit Service - Trigger Access Charge, Per Trigger, Per DN, Feature Code				BAPTF		34.67	34.67	14.44	14.44		15.75				
		AIN Toolkit Service - Query Charge, Per Query					0.0535577										
		AIN Toolkit Service - Type 1 Node Charge, Per AIN Toolkit Subscription, Per Node, Per Query					0.0063509										
		AIN Toolkit Service - SCP Storage Charge, Per SMS Access Account, Per 100 Kilobytes					0.06										
		AIN Toolkit Service - Monthly report - Per AIN Toolkit Service Subscription			CAM	BAPMS	11.11	7.87	7.87	5.54	5.54		15.75				
		AIN Toolkit Service - Special Study - Per AIN Toolkit Service Subscription			CAM	BAPLS	2.71	8.71	8.71				15.75				

UNBUNDLED NETWORK ELEMENTS - Mississippi														Attachment: 2		Exhibit: B	
CATEGORY		RATE ELEMENTS	Interim	Zone	BCS	USOC	RATES($)					Svc Order Submitted Elec per LSR	Svc Order Submitted Manually per LSR	Incremental Charge - Manual Svc Order vs. Electronic-1st	Incremental Charge - Manual Svc Order vs. Electronic-Add'l	Incremental Charge - Manual Svc Order vs. Electronic-Disc 1st	Incremental Charge - Manual Svc Order vs. Electronic-Disc Add'l
							Rec	Nonrecurring		Nonrecurring Disconnect		OSS Rates($)					
								First	Add'l	First	Add'l	SOMEC	SOMAN	SOMAN	SOMAN	SOMAN	SOMAN
		AIN Toolkit Service - Call Event Report - Per AIN Toolkit Service Subscription			CAM	BAPDS	8.48	7.87	7.87	5.54	5.54		15.75				
		AIN Toolkit Service - Call Event Special Study - Per AIN Toolkit Service Subscription			CAM	BAPES	0.09	8.71	8.71				15.75				
ENHANCED EXTENDED LINK (EELs)																	
	NOTE: New EELs available in GA, TN, KY, LA, MS, & SC and density zone 1 of following MSAs: Orlando, FL; Miami, FL; Ft. Lauderdale, FL;																
	NOTE: Charlotte-Gastonia-Rockhill, NC; Greensboro-Winston Salem-High Point, NC. Use all rates below except Switch As Is Charge.																
	NOTE: In all states, EEL network elements shown below also apply to currently combined facilities which are converted to UNE rates. A Switch As Is Charge applies to currently combined facilities converted to UNEs.(Non-recurring rates do not apply.)																
	NOTE: In GA, TN, KY, LA, MS & SC the EEL network elements apply to ordinarily combined network elements.(No Switch As Is Charge.)																
	2-WIRE VOICE GRADE EXTENDED LOOP WITH DEDICATED DS1 INTEROFFICE TRANSPORT (EEL)																
		First 2-Wire VG Loop(SL2) in a DS1 Interofficed Transport Combination - Zone 1		1	UNCVX	UEAL2	13.89	105.96	68.28	52.82	10.37		15.75				
		First 2-Wire VG Grade Loop(SL2) in a DS1 Interofficed Transport Combination - Zone 2		2	UNCVX	UEAL2	18.75	105.96	68.28	52.82	10.37		15.75				
		First 2-Wire VG Grade Loop(SL2) in a DS1 Interofficed Transport Combination - Zone 3		3	UNCVX	UEAL2	27.55	105.96	68.28	52.82	10.37		15.75				
		First 2-Wire VG Loop(SL2) in a DS1 Interofficed Transport Combination - Zone 4		4	UNCVX	UEAL2	45.72	105.96	68.28	52.82	10.37		15.75				
		Interoffice Transport - Dedicated - DS1 combination - Per Mile per month			UNC1X	1L5XX	0.1813										
		Interoffice Transport - Dedicated - DS1 combination - Facility Termination per month			UNC1X	U1TF1	51.72	89.79	82.28	16.86	14.90		15.75				
		DS1 Channelization System Per Month			UNC1X	MQ1	102.85	91.57	62.94	10.87	10.10		15.75				
		Voice Grade COCI - DS1 To Ds0 Interface - Per Month			UNCVX	1D1VG	0.5737	6.62	4.74								
		Each Additional 2-Wire VG Loop(SL 2) in the same DS1 Interoffice Transport Combination - Zone 1		1	UNCVX	UEAL2	13.89	105.96	68.28	52.82	10.37		15.75				
		Each Additional 2-Wire VG Loop(SL2) in the same DS1 Interoffice Transport Combination - Zone 2		2	UNCVX	UEAL2	18.75	105.96	68.28	52.82	10.37		15.75				
		Each Additional 2-Wire VG Loop(SL2) in the same DS1 Interoffice Transport Combination - Zone 3		3	UNCVX	UEAL2	27.55	105.96	68.28	52.82	10.37		15.75				
		Each Additional 2-Wire VG Loop(SL2) in the same DS1 Interoffice Transport Combination - Zone 4		4	UNCVX	UEAL2	45.72	105.96	68.28	52.82	10.37		15.75				
		Voice Grade COCI - DS1 to DS0 Channel System combination - per month			UNCVX	1D1VG	0.5737	6.62	4.74				15.75				
		Nonrecurring Currently Combined Network Elements Switch -As-Is Charge			UNC1X	UNCCC		5.63	5.63	7.20	7.20		15.75				
	4-WIRE VOICE GRADE EXTENDED LOOP WITH DEDICATED DS1 INTEROFFICE TRANSPORT (EEL)																
		First 4-Wire Analog Voice Grade Loop in a DS1 Interoffice Transport Combination - Zone 1		1	UNCVX	UEAL4	27.47	132.27	94.59	60.68	14.64		15.75				
		First 4-Wire Analog Voice Grade Loop in a DS1 Interoffice Transport Combination - Zone 2		2	UNCVX	UEAL4	38.26	132.27	94.59	60.68	14.64		15.75				
		First 4-Wire Analog Voice Grade Loop in a DS1 Interoffice Transport Combination - Zone 3		3	UNCVX	UEAL4	50.03	132.27	94.59	60.68	14.64		15.75				
		First 4-Wire Analog Voice Grade Loop in a DS1 Interoffice Transport Combination - Zone 4		4	UNCVX	UEAL4	50.03	132.27	94.59	60.68	14.64		15.75				
		Interoffice Transport - Dedicated - DS1 combination - Per Mile Per Month			UNC1X	1L5XX	0.1813										
		Interoffice Transport - Dedicated - DS1 - Facility Termination Per Month			UNC1X	U1TF1	51.72	89.79	82.28	16.86	14.90		15.75				
		Channelization - Channel System DS1 to DS0 combination Per Month			UNC1X	MQ1	102.85	91.57	62.94	10.87	10.10		15.75				
		Voice Grade COCI - DS1 to DS0 Channel System combination - per month			UNCVX	1D1VG	0.5737	6.62	4.74				15.75				
		Additional 4-Wire Analog Voice Grade Loop in same DS1 Interoffice Transport Combination - Zone 1		1	UNCVX	UEAL4	27.47	132.27	94.59	60.68	14.64		15.75				
		Additional 4-Wire Analog Voice Grade Loop in same DS1 Interoffice Transport Combination - Zone 2		2	UNCVX	UEAL4	38.26	132.27	94.59	60.68	14.64		15.75				
		Additional 4-Wire Analog Voice Grade Loop in same DS1 Interoffice Transport Combination - Zone 3		3	UNCVX	UEAL4	50.03	132.27	94.59	60.68	14.64		15.75				

CATEGORY		RATE ELEMENTS	Interim	Zone	BCS	USOC	RATES($)					Svc Order Submitted Elec per LSR	Svc Order Submitted Manually per LSR	Incremental Charge - Manual Svc Order vs. Electronic-1st	Incremental Charge - Manual Svc Order vs. Electronic-Add'l	Incremental Charge - Manual Svc Order vs. Electronic-Disc 1st	Incremental Charge - Manual Svc Order vs. Electronic-Disc Add'l
							Rec	Nonrecurring		Nonrecurring Disconnect		OSS Rates($)					
								First	Add'l	First	Add'l	SOMEC	SOMAN	SOMAN	SOMAN	SOMAN	SOMAN
		Additional 4-Wire Analog Voice Grade Loop in same DS1 Interoffice Transport Combination - Zone 4		4	UNCVX	UEAL4	50.03	132.27	94.59	60.68	14.64		15.75				
		Voice Grade COCI - DS1 to DS0 Channel System combination - per month			UNCVX	1D1VG	0.5737	6.62	4.74				15.75				
		Nonrecurring Currently Combined Network Elements Switch -As-Is Charge			UNC1X	UNCCC		5.63	5.63	7.20	7.20		15.75				
	4-WIRE 56 KBPS EXTENDED DIGITAL LOOP WITH DEDICATED DS1 INTEROFFICE TRANSPORT (EEL)																
		First 4-Wire 56Kbps Digital Grade Loop in a DS1 Interoffice Transport Combination - Zone 1		1	UNCDX	UDL56	27.44	126.53	88.85	60.68	14.64		15.75				
		First 4-wire 56Kbps Digital Grade Loop in a DS1 Interoffice Transport Combination - Zone 2		2	UNCDX	UDL56	34.55	126.53	88.85	60.68	14.64		15.75				
		First 4-Wire 56Kbps Digital Grade Loop in a DS1 Interoffice Transport Combination - Zone 3		3	UNCDX	UDL56	40.76	126.53	88.85	60.68	14.64		15.75				
		First 4-Wire 56Kbps Digital Grade Loop in a DS1 Interoffice Transport Combination - Zone 4		4	UNCDX	UDL56	32.25	126.53	88.85	60.68	14.64		15.75				
		Interoffice Transport - Dedicated - DS1 combination - Per Mile Per Month			UNC1X	1L5XX	0.1813						15.75				
		Interoffice Transport - Dedicated - DS1 - combination Facility Termination Per Month			UNC1X	U1TF1	51.72	89.79	82.28	16.86	14.90		15.75				
		Channelization - Channel System DS1 to DS0 combination Per Month			UNC1X	MQ1	102.85	91.57	62.94	10.87	10.10		15.75				
		OCU-DP COCI (data) - DS1 to DS0 Channel System - per month (2.4-64kbs)			UNCDX	1D1DD	1.22	6.62	4.74				15.75				
		Additional 4-Wire 56Kbps Digital Grade Loopin same DS1 Interoffice Transport Combination - Zone 1		1	UNCDX	UDL56	27.44	126.53	88.85	60.68	14.64		15.75				
		Additional 4-Wire 56Kbps Digital Grade Loopin same DS1 Interoffice Transport Combination - Zone 2		2	UNCDX	UDL56	34.55	126.53	88.85	60.68	14.64		15.75				
		Additional 4-Wire 56Kbps Digital Grade Loopin same DS1 Interoffice Transport Combination - Zone 3		3	UNCDX	UDL56	40.76	126.53	88.85	60.68	14.64		15.75				
		Additional 4-Wire 56Kbps Digital Grade Loopin same DS1 Interoffice Transport Combination - Zone 4		4	UNCDX	UDL56	32.25	126.53	88.85	60.68	14.64		15.75				
		OCU-DP COCI (data) - DS1 to DS0 Channel System - combination per month (2.4-64kbs)			UNCDX	1D1DD	1.22	6.62	4.74				15.75				
		Nonrecurring Currently Combined Network Elements Switch -As-Is Charge			UNC1X	UNCCC		5.63	5.63	7.20	7.20		15.75				
	4-WIRE 64 KBPS EXTENDED DIGITAL LOOP WITH DEDICATED DS1 INTEROFFICE TRANSPORT (EEL)																
		First 4-Wire 64Kbps Digital Grade Loop in a DS1 Interoffice Transport Combination - Zone 1		1	UNCDX	UDL64	27.44	126.53	88.85	60.68	14.64		15.75				
		First 4-Wire 64Kbps Digital Grade Loop in a DS1 Interoffice Transport Combination - Zone 2		2	UNCDX	UDL64	34.55	126.53	88.85	60.68	14.64		15.75				
		First 4-Wire 64Kbps Digital Grade Loop in a DS1 Interoffice Transport Combination - Zone 3		3	UNCDX	UDL64	40.76	126.53	88.85	60.68	14.64		15.75				
		First 4-Wire 64Kbps Digital Grade Loop in a DS1 Interoffice Transport Combination - Zone 4		4	UNCDX	UND64	32.25	126.53	88.85	60.68	14.64		15.75				
		Interoffice Transport - Dedicated - DS1 combination - Per Mile Per Month			UNC1X	1L5XX	0.1813										
		Interoffice Transport - Dedicated - DS1 combination - Facility Termination Per Month			UNC1X	U1TF1	51.72	89.79	82.28	16.86	14.90		15.75				
		Channelization - Channel System DS1 to DS0 combination Per Month			UNC1X	MQ1	102.85	91.57	62.94	10.87	10.10		15.75				
		OCU-DP COCI (data) - DS1 to DS0 Channel System combination - per month (2.4-64kbs)			UNCDX	1D1DD	1.22	6.62	4.74				15.75				
		Additional 4-Wire 64Kbps Digital Grade Loopin same DS1 Interoffice Transport Combination - Zone 1		1	UNCDX	UDL64	27.44	126.53	88.85	60.68	14.64		15.75				
		Additional 4-Wire 64Kbps Digital Grade Loopin same DS1 Interoffice Transport Combination - Zone 2		2	UNCDX	UDL64	34.55	126.53	88.85	60.68	14.64		15.75				
		Additional 4-Wire 64Kbps Digital Grade Loopin same DS1 Interoffice Transport Combination - Zone 3		3	UNCDX	UDL64	40.76	126.53	88.85	60.68	14.64		15.75				

CATEGORY		RATE ELEMENTS	Interim	Zone	BCS	USOC	RATES($)					Svc Order Submitted Elec per LSR	Svc Order Submitted Manually per LSR	Incremental Charge - Manual Svc Order vs. Electronic-1st	Incremental Charge - Manual Svc Order vs. Electronic-Add'l	Incremental Charge - Manual Svc Order vs. Electronic-Disc 1st	Incremental Charge - Manual Svc Order vs. Electronic-Disc Add'l
							Rec	Nonrecurring		Nonrecurring Disconnect		OSS Rates($)					
								First	Add'l	First	Add'l	SOMEC	SOMAN	SOMAN	SOMAN	SOMAN	SOMAN
		Additional 4-Wire 64Kbps Digital Grade Loopin same DS1 Interoffice Transport Combination - Zone 4		4	UNCDX	UDL64	32.25	126.53	88.85	60.68	14.64		15.75				
		OCU-DP COCI (data) - DS1 to DS0 Channel System combination - per month (2.4-64kbs)			UNCDX	1D1DD	1.22	6.62	4.74				15.75				
		Nonrecurring Currently Combined Network Elements Switch -As-Is Charge			UNC1X	UNCCC		5.63	5.63	7.20	7.20		15.75				
	4-WIRE DS1 DIGITAL EXTENDED LOOP WITH DEDICATED DS1 INTEROFFICE TRANSPORT (EEL)																
		4-Wire DS1 Digital Loop in Combination with DS1 Interoffice Transport - Zone 1		1	UNC1X	USLXX	79.08	253.93	158.45	46.10	12.07		15.75				
		4-Wire DS1 Digital Loop in Combination with DS1 Interoffice Transport - Zone 2		2	UNC1X	USLXX	129.38	253.93	158.45	46.10	12.07		15.75				
		4-Wire DS1 Digital Loop in Combination with DS1 Interoffice Transport - Zone 3		3	UNC1X	USLXX	206.74	253.93	158.45	46.10	12.07		15.75				
		4-Wire DS1 Digital Loop in Combination with DS1 Interoffice Transport - Zone 4		4	UNC1X	USLXX	458.46	253.93	158.45	46.10	12.07		15.75				
		Interoffice Transport - Dedicated - DS1 combination - Per Mile Per Month			UNC1X	1L5XX	0.1813										
		Interoffice Transport - Dedicated - DS1 combination - Facility Termination Per Month			UNC1X	U1TF1	51.72	89.79	82.28	16.86	14.90		15.75				
		Nonrecurring Currently Combined Network Elements Switch -As-Is Charge			UNC1X	UNCCC		5.63	5.63	7.20	7.20		15.75				
	4-WIRE DS1 DIGITAL EXTENDED LOOP WITH DEDICATED DS3 INTEROFFICE TRANSPORT (EEL)																
		First DS1Loop in DS3 Interoffice Transport Combination - Zone 1		1	UNC1X	USLXX	79.08	253.93	158.45	46.10	12.07		15.75				
		First DS1Loop in DS3 Interoffice Transport Combination - Zone 2		2	UNC1X	USLXX	129.38	253.93	158.45	46.10	12.07		15.75				
		First DS1Loop in DS3 Interoffice Transport Combination - Zone 3		3	UNC1X	USLXX	206.74	253.93	158.45	46.10	12.07		15.75				
		First DS1Loop in DS3 Interoffice Transport Combination - Zone 4		4	UNC1X	USLXX	458.46	253.93	158.45	46.10	12.07		15.75				
		Interoffice Transport - Dedicated - DS3 combination - Per Mile Per Month			UNC3X	1L5XX	4.29										
		Interoffice Transport - Dedicated - DS3 - Facility Termination per month			UNC3X	U1TF3	641.90	280.37	163.70	62.08	60.29		15.75				
		DS3 to DS1 Channel System combination per month			UNC3X	MQ3	107.85	179.17	94.52	34.30	32.82		15.75				
		DS3 Interface Unit (DS1 COCI) combination per month			UNC1X	UC1D1	12.96	6.62	4.74				15.75				
		Additional DS1Loop in DS3 Interoffice Transport Combination - Zone 1		1	UNC1X	USLXX	79.08	253.93	158.45	46.10	12.07		15.75				
		Additional DS1Loop in DS3 Interoffice Transport Combination - Zone 2		2	UNC1X	USLXX	129.38	253.93	158.45	46.10	12.07		15.75				
		Additional DS1Loop in DS3 Interoffice Transport Combination - Zone 3		3	UNC1X	USLXX	206.74	253.93	158.45	46.10	12.07		15.75				
		Additional DS1Loop in DS3 Interoffice Transport Combination - Zone 4		4	UNC1X	USLXX	458.46	253.93	158.45	46.10	12.07		15.75				
		DS3 Interface Unit (DS1 COCI) combination per month			UNC1X	UC1D1	12.96	6.62	4.74				15.75				
		Nonrecurring Currently Combined Network Elements Switch -As-Is Charge			UNC3X	UNCCC		5.63	5.63	7.20	7.20		15.75				
	2-WIRE VOICE GRADE EXTENDED LOOP/ 2 WIRE VOICE GRADE INTEROFFICE TRANSPORT (EEL)																
		2-WireVG Loop used with 2-wire VG Interoffice Transport Combination - Zone 1		1	UNCVX	UEAL2	13.89	105.96	68.28	52.82	10.37		15.75				
		2-WireVG Loop used with 2-wire VG Interoffice Transport Combination - Zone 2		2	UNCVX	UEAL2	18.75	105.96	68.28	52.82	10.37		15.75				
		2-WireVG Loop used with 2-wire VG Interoffice Transport Combination - Zone 3		3	UNCVX	UEAL2	27.55	105.96	68.28	52.82	10.37		15.75				
		A.1.2 2-WireVG Loop used with 2-wire VG Interoffice Transport Combination - Zone 4		4	UNCVX	UEAL2	45.72	105.96	68.28	52.82	10.37		15.75				
		Interoffice Transport - Dedicated - 2-wire VG combination - Per Mile Per Month			UNCVX	1L5XX	0.00088										

CATEGORY		RATE ELEMENTS	Interim	Zone	BCS	USOC	RATES($)					Svc Order Submitted Elec per LSR	Svc Order Submitted Manually per LSR	Incremental Charge - Manual Svc Order vs. Electronic-1st	Incremental Charge - Manual Svc Order vs. Electronic-Add'l	Incremental Charge - Manual Svc Order vs. Electronic-Disc 1st	Incremental Charge - Manual Svc Order vs. Electronic-Disc Add'l
							Rec	Nonrecurring		Nonrecurring Disconnect		OSS Rates($)					
								First	Add'l	First	Add'l	SOMEC	SOMAN	SOMAN	SOMAN	SOMAN	SOMAN
		Interoffice Transport - Dedicated - 2- Wire Voice Grade combination - Facility Termination per month			UNCVX	U1TV2	20.32	40.77	27.57	17.26	7.11		15.75				
		Nonrecurring Currently Combined Network Elements Switch -As-Is Charge			UNCVX	UNCCC		5.63	5.63	7.20	7.20		15.75				
	4-WIRE VOICE GRADE EXTENDED LOOP/ 4 WIRE VOICE GRADE INTEROFFICE TRANSPORT (EEL)																
		4-WireVG Loop used with 4-wire VG Interoffice Transport Combination - Zone 1		1	UNCVX	UEAL4	27.47	132.27	94.59	60.68	14.64		15.75				
		4-WireVG Loop used with 4-wire VG Interoffice Transport Combination - Zone 2		2	UNCVX	UEAL4	38.26	132.27	94.59	60.68	14.64		15.75				
		4-WireVG Loop used with 4-wire VG Interoffice Transport Combination - Zone 3		3	UNCVX	UEAL4	50.03	132.27	94.59	60.68	14.64		15.75				
		4-WireVG Loop used with 4-wire VG Interoffice Transport Combination - Zone 4		4	UNCVX	UEAL4	50.03	132.27	94.59	60.68	14.64		15.75				
		Interoffice Transport - Dedicated - 4-wire VG combination - Per Mile Per Month			UNCVX	1L5XX	0.00088										
		Interoffice Transport - Dedicated - 4- Wire Voice Grade combination - Facility Termination per month			UNCVX	U1TV4	17.86	40.77	27.57	17.26	7.11		15.75				
		Nonrecurring Currently Combined Network Elements Switch -As-Is Charge			UNCVX	UNCCC		5.63	5.63	7.20	7.20		15.75				
	DS3 DIGITAL EXTENDED LOOP WITH DEDICATED DS3 INTEROFFICE TRANSPORT (EEL)																
		High Capacity Unbundled Local Loop - DS3 combination - Per Mile per month			UNC3X	1L5ND	11.20										
		High Capacity Unbundled Local Loop - DS3 combination - Facility Termination per month			UNC3X	UE3PX	252.17	454.13	265.47	123.23	86.19		15.75				
		Interoffice Transport - Dedicated - DS3 - Per Mile per month			UNC3X	1L5XX	4.29										
		Interoffice Transport - Dedicated - DS3 combination - Facility Termination per month			UNC3X	U1TF3	641.90	280.37	163.70	62.08	60.29		15.75				
		Nonrecurring Currently Combined Network Elements Switch -As-Is Charge			UNC3X	UNCCC		5.63	5.63	7.20	7.20		15.75				
	STS1 DIGITAL EXTENDED LOOP WITH DEDICATED STS1 INTEROFFICE TRANSPORT (EEL)																
		High Capacity Unbundled Local Loop - STS1 combination - Per Mile per month			UNCSX	1L5ND	11.20										
		High Capacity Unbundled Local Loop - STS1 combination - Facility Termination per month			UNCSX	UDLS1	264.35	454.13	265.47	123.23	86.19		15.75				
		Interoffice Transport - Dedicated - STS1 combination - Per Mile per month			UNCSX	1L5XX	4.29										
		Interoffice Transport - Dedicated - STS1 combination - Facility Termination per month			UNCSX	U1TFS	644.21	280.37	163.70	62.08	60.29		15.75				
		Nonrecurring Currently Combined Network Elements Switch -As-Is Charge			UNCSX	UNCCC		5.63	5.63	7.20	7.20		15.75				
	2-WIRE ISDN EXTENDED LOOP WITH DS1 INTEROFFICE TRANSPORT (EEL)																
		First 2-Wire ISDN Loop in a DS1 Interoffice Combination Transport - Zone 1		1	UNCNX	U1L2X	21.01	117.61	79.92	52.82	10.37		15.75				
		First 2-Wire ISDN Loop in a DS1 Interoffice Combination Transport - Zone 2		2	UNCNX	U1L2X	27.59	117.61	79.92	52.82	10.37		15.75				
		First 2-Wire ISDN Loop in a DS1 Interoffice Combination Transport - Zone 3		3	UNCNX	U1L2X	37.34	117.61	79.92	52.82	10.37		15.75				
		First 2-Wire ISDN Loop in a DS1 Interoffice Combination Transport - Zone 4		4	UNCNX	U1L2X	59.18	117.61	79.92	52.82	10.37		15.75				
		Interoffice Transport - Dedicated - DS1 combination - Per Mile			UNC1X	1L5XX	0.1813										
		Interoffice Transport - Dedicated - DS1 combintion - Facility Termination per month			UNC1X	U1TF1	51.72	89.79	82.28	16.86	14.90		15.75				
		Channelization - Channel System DS1 to DS0 combination - per month			UNC1X	MQ1	102.85	91.57	62.94	10.87	10.10		15.75				
		2-wire ISDN COCI (BRITE) - DS1 to DS0 Channel System combination - per month			UNCNX	UC1CA	2.62	6.62	4.74				15.75				
		Additional 2-wire ISDN Loop in same DS1Interoffice Transport Combination - Zone 1		1	UNCNX	U1L2X	21.01	117.61	79.92	52.82	10.37		15.75				

CATEGORY		RATE ELEMENTS	Interim	Zone	BCS	USOC	RATES($)					Svc Order Submitted Elec per LSR	Svc Order Submitted Manually per LSR	Incremental Charge - Manual Svc Order vs. Electronic-1st	Incremental Charge - Manual Svc Order vs. Electronic-Add'l	Incremental Charge - Manual Svc Order vs. Electronic-Disc 1st	Incremental Charge - Manual Svc Order vs. Electronic-Disc Add'l
							Rec	Nonrecurring		Nonrecurring Disconnect		OSS Rates($)					
								First	Add'l	First	Add'l	SOMEC	SOMAN	SOMAN	SOMAN	SOMAN	SOMAN
		Additional 2-wire ISDN Loop in same DS1Interoffice Transport Combination - Zone 2		2	UNCNX	U1L2X	27.59	117.61	79.92	52.82	10.37		15.75				
		Additional 2-wire ISDN Loop in same DS1Interoffice Transport Combination - Zone 3		3	UNCNX	U1L2X	37.34	117.61	79.92	52.82	10.37		15.75				
		Additional 2-wire ISDN Loop in same DS1Interoffice Transport Combination - Zone 4		4	UNCNX	U1L2X	59.18	117.61	79.92	52.82	10.37		15.75				
		2-wire ISDN COCI (BRITE) - DS1 to DS0 Channel System combintaion- per month			UNCNX	UC1CA	2.62	6.62	4.74				15.75				
		Nonrecurring Currently Combined Network Elements Switch -As-Is Charge			UNC1X	UNCCC		5.63	5.63	7.20	7.20		15.75				
	4-WIRE DS1 DIGITAL EXTENDED LOOP WITH DEDICATED STS-1 INTEROFFICE TRANSPORT (EEL)																
		First DS1 Loop in STS1 Interoffice Transport Combination - Zone 1		1	UNC1X	USLXX	79.08	253.93	158.45	46.10	12.07		15.75				
		First DS1 Loop in STS1 Interoffice Transport Combination - Zone 2		2	UNC1X	USLXX	129.38	253.93	158.45	46.10	12.07		15.75				
		First DS1 Loop in STS1 Interoffice Transport Combination - Zone 3		3	UNC1X	USLXX	206.74	253.93	158.45	46.10	12.07		15.75				
		First DS1 Loop in STS1 Interoffice Transport Combination - Zone 4		4	UNC1X	USLXX	458.46	253.93	158.45	46.10	12.07		15.75				
		Interoffice Transport - Dedicated - STS1 combination - Per Mile Per Month			UNCSX	1L5XX	4.29										
		Interoffice Transport - Dedicated - STS1 combination - Facility Termination			UNCSX	U1TFS	644.21	280.37	163.70	62.08	60.29		15.75				
		STS1 to DS1 Channel System conbination per month			UNCSX	MQ3	107.63	179.17	94.52	34.30	32.82		15.75				
		DS3 Interface Unit (DS1 COCI) combination per month			UNC1X	UC1D1	12.96	6.62	4.74				15.75				
		Additional DS1Loop in STS1 Interoffice Transport Combination - Zone 1		1	UNC1X	USLXX	79.08	253.93	158.45	46.10	12.07		15.75				
		Additional DS1Loop in STS1 Interoffice Transport Combination - Zone 2		2	UNC1X	USLXX	129.38	253.93	158.45	46.10	12.07		15.75				
		Additional DS1Loop in STS1 Interoffice Transport Combination - Zone 3		3	UNC1X	USLXX	206.74	253.93	158.45	46.10	12.07		15.75				
		Additional DS1Loop in STS1 Interoffice Transport Combination - Zone 4		4	UNC1X	USLXX	458.46	253.93	158.45	46.10	12.07		15.75				
		DS3 Interface Unit (DS1 COCI) combination per month			UNC1X	UC1D1	12.96	6.62	4.74				15.75				
		Nonrecurring Currently Combined Network Elements Switch -As-Is Charge			UNCSX	UNCCC		5.63	5.63	7.20	7.20		15.75				
	4-WIRE 56 KBPS DIGITAL EXTENDED LOOP WITH 56 KBPS INTEROFFICE TRANSPORT (EEL)																
		4-wire 56 kbps Loop/4-wire 56 kbps Interoffice Transport Combination - Zone 1		1	UNCDX	UDL56	27.44	126.53	88.85	60.68	14.64		15.75				
		4-wire 56 kbps Loop/4-wire 56 kbps Interoffice Transport Combination - Zone 2		2	UNCDX	UDL56	34.55	126.53	88.85	60.68	14.64		15.75				
		4-wire 56 kbps Loop/4-wire 56 kbps Interoffice Transport Combination - Zone 3		3	UNCDX	UDL56	40.76	126.53	88.85	60.68	14.64		15.75				
		4-wire 56 kbps Loop/4-wire 56 kbps Interoffice Transport Combination - Zone 4		4	UNCDX	UDL56	32.25	126.53	88.85	60.68	14.64		15.75				
		Interoffice Transport - Dedicated - 4-wire 56 kbps combination - Per Mile			UNCDX	1L5XX	0.00088										
		Interoffice Transport - Dedicated - 4-wire 56 kbps combination - Facility Termination			UNCDX	U1TD5	14.14	40.78	27.57	17.26	7.11		15.75				
		Nonrecurring Currently Combined Network Elements Switch -As-Is Charge			UNCDX	UNCCC		5.63	5.63	7.20	7.20		15.75				
	4-WIRE 64 KBPS DIGITAL EXTENDED LOOP WITH 64 KBPS INTEROFFICE TRANSPORT (EEL)																
		4-wire 64 kbps Loop/4-wire 64 kbps Interoffice Transport Combination - Zone 1		1	UNCDX	UDL64	27.44	126.53	88.85	60.68	14.64		15.75				
		4-wire 64 kbps Loop/4-wire 64 kbps Interoffice Transport Combination - Zone 2		2	UNCDX	UDL64	34.55	126.53	88.85	60.68	14.64		15.75				
		4-wire 64 kbps Loop/4-wire 64 kbps Interoffice Transport Combination - Zone 3		3	UNCDX	UDL64	40.76	126.53	88.85	60.68	14.64		15.75				

UNBUNDLED NETWORK ELEMENTS - Mississippi													Attachment: 2		Exhibit: B	
CATEGORY	RATE ELEMENTS	Interim	Zone	BCS	USOC	RATES($)					Svc Order Submitted Elec per LSR	Svc Order Submitted Manually per LSR	Incremental Charge - Manual Svc Order vs. Electronic-1st	Incremental Charge - Manual Svc Order vs. Electronic-Add'l	Incremental Charge - Manual Svc Order vs. Electronic-Disc 1st	Incremental Charge - Manual Svc Order vs. Electronic-Disc Add'l
						Rec	Nonrecurring		Nonrecurring Disconnect		OSS Rates($)					
							First	Add'l	First	Add'l	SOMEC	SOMAN	SOMAN	SOMAN	SOMAN	SOMAN
	4-wire 64 kbps Loop/4-wire 64 kbps Interoffice Transport Combination - Zone 4		4	UNCDX	UDL64	32.25	126.53	88.85	60.68	14.64		15.75				
	Interoffice Transport - Dedicated - 4-wire 64 kbps combination - Per Mile			UNCDX	1L5XX	0.00088										
	Interoffice Transport - Dedicated - 4-wire 64 kbps combination - Facility Termination			UNCDX	U1TD6	14.14	40.78	27.57	17.26	7.11		15.75				
	Nonrecurring Currently Combined Network Elements Switch -As-Is Charge			UNCDX	UNCCC		5.63	5.63	7.20	7.20		15.75				
ADDITIONAL NETWORK ELEMENTS																
	When used as a part of a currently combined facility, the non-recurrng charges do not apply, but a Switch As Is charge does apply.															
	When used as ordinarilty combined network elements in Mississippi, the non-recurring charges apply and the Switch As Is Charge does not.															
	Nonrecurring Currently Combined Network Elements "Switch As Is" Charge (One applies to each combination)															
	Nonrecurring Currently Combined Network Elements Switch -As-Is Charge - 2 wire/4-Wire VG			UNCVX	UNCCC		5.63	5.63	7.20	7.20		15.75				
	Nonrecurring Currently Combined Network Elements Switch -As-Is Charge - 56/64 kbps			UNCDX	UNCCC		5.63	5.63	7.20	7.20		15.75				
	Nonrecurring Currently Combined Network Elements Switch -As-Is Charge - DS1			UNC1X	UNCCC		5.63	5.63	7.20	7.20		15.75				
	Nonrecurring Currently Combined Network Elements Switch -As-Is Charge - DS3			UNC3X	UNCCC		5.63	5.63	7.20	7.20		15.75				
	Nonrecurring Currently Combined Network Elements Switch -As-Is Charge - STS1			UNCSX	UNCCC		5.63	5.63	7.20	7.20		15.75				
	NOTE: Local Channel - Dedicated Transport - minimum billing period - Below DS3=one month, DS3 and above=four months															
	Local Channel - Dedicated - 2-Wire Voice Grade per month			UNCXV	ULDV2	14.91	194.22	33.36	37.79	3.30		15.75				
	Local Channel - Dedicated - 4-Wire Voice Grade per month			UNCXV	ULDV4	15.99	194.66	33.80	38.27	3.78		15.75				
	Local Channel - Dedicated - DS1 per month Zone 1		1	UNC1X	ULDF1	36.83	178.50	154.61	22.89	15.74		15.75				
	Local Channel - Dedicated -DS1 Per Month Zone 2		2	UNC1X	ULDF1	35.99	178.50	154.61	22.89	15.74		15.75				
	Local Channel - Dedicated - DS1- Per Month Zone 3		3	UNC1X	ULDF1	221.63	178.50	154.61	22.89	15.74		15.75				
	Local Channel - Dedicated - DS1- Per Month Zone 4		4	UNC1X	ULDF1	221.63	178.50	154.61	22.89	15.74		15.75				
	Local Channel - Dedicated - DS3 - Per Mile per month			UNC3X	1L5NC	9.66										
	Local Channel - Dedicated - DS3 - Facility Termination per month			UNC3X	ULDF3	413.87	454.13	265.47	123.23	86.19		15.75				
	Local Channel - Dedicated - STS-1- Per Mile per month			UNCSX	1L5NC	9.66										
	Local Channel - Dedicated - STS-1 - Facility Termination per month			UNCSX	ULDFS	408.02	454.13	265.47	123.23	86.19		15.75				
UNBUNDLED LOCAL EXCHANGE SWITCHING(PORTS)																
	Exchange Ports															
	NOTE: Although the Port Rate includes all available features in GA, KY, LA & TN, the desired features will need to be ordered using retail USOCs															
	2-WIRE VOICE GRADE LINE PORT RATES (RES)															
	Exchange Ports - 2-Wire Analog Line Port- Res.			UEPSR	UEPRL	1.41	2.39	2.29	1.42	1.33		15.75				
	Exchange Ports - 2-Wire Analog Line Port with Caller ID - Res.			UEPSR	UEPRC	1.41	2.39	2.29	1.42	1.33		15.75				
	Exchange Ports - 2-Wire Analog Line Port outgoing only - Res.			UEPSR	UEPRO	1.41	2.39	2.29	1.42	1.33		15.75				
	Exchange Ports - 2-Wire VG unbundled MS extended local dialing parity Port with Caller ID - Res.			UEPSR	UEPAT	1.41	2.39	2.29	1.42	1.33		15.75				
	Exchange Ports - 2-Wire VG unbundled res, low usage line port with Caller ID (LUM)			UEPSR	UEPAP	1.41	2.39	2.29	1.42	1.33		15.75				
	Subsequent Activity			UEPSR	USASC	0.00	0.00	0.00				15.75				
	FEATURES															
	All Available Vertical Features			UEPSR	UEPVF	2.56	0.00	0.00				15.75				
	2-WIRE VOICE GRADE LINE PORT RATES (BUS)															
	Exchange Ports - 2-Wire Analog Line Port without Caller ID - Bus			UEPSB	UEPBL	1.41	2.39	2.29	1.42	1.33		15.75				
	Exchange Ports - 2-Wire VG unbundled Line Port with unbundled port with Caller+E484 ID - Bus.			UEPSB	UEPBC	1.41	2.39	2.29	1.42	1.33		15.75				
	Exchange Ports - 2-Wire Analog Line Port outgoing only - Bus.			UEPSB	UEPBO	1.41	2.39	2.29	1.42	1.33		15.75				

CATEGORY	RATE ELEMENTS	Interim	Zone	BCS	USOC	RATES($) Rec	Nonrecurring First	Nonrecurring Add'l	Nonrecurring Disconnect First	Nonrecurring Disconnect Add'l	Svc Order Submitted Elec per LSR	Svc Order Submitted Manually per LSR	Incremental Charge - Manual Svc Order vs. Electronic-1st	Incremental Charge - Manual Svc Order vs. Electronic-Add'l	Incremental Charge - Manual Svc Order vs. Electronic-Disc 1st	Incremental Charge - Manual Svc Order vs. Electronic-Disc Add'l
											OSS Rates($)					
											SOMEC	SOMAN	SOMAN	SOMAN	SOMAN	SOMAN
	Exchange Ports - 2-Wire VG unbundled MS extended local dialing parity Port with Caller ID - Bus.			UEPSB	UEPAY	1.41	2.39	2.29	1.42	1.33		15.75				
	Exhange Ports - 2-Wire VG unbundled incoming only port with Caller ID - Bus			UEPSB	UEPB1	1.41	2.39	2.29	1.42	1.33		15.75				
	Subsequent Activity			UEPSB	USASC	0.00	0.00	0.00				15.75				
FEATURES																
	All Available Vertical Features			UEPSB	UEPVF	2.56	0.00	0.00				15.75				
EXCHANGE PORT RATES (DID & PBX)																
	2-Wire VG Unbundled 2-Way PBX Trunk - Res			UEPSE	UEPRD	1.41	31.45	14.93	14.38	0.92		15.75				
	2-Wire VG Line Side Unbundled 2-Way PBX Trunk - Bus			UEPSP	UEPPC	1.41	31.45	14.93	14.38	0.92		15.75				
	2-Wire VG Line Side Unbundled Outward PBX Trunk - Bus			UEPSP	UEPPO	1.41	31.45	14.93	14.38	0.92		15.75				
	2-Wire VG Line Side Unbundled Incoming PBX Trunk - Bus			UEPSP	UEPP1	1.41	31.45	14.93	14.38	0.92		15.75				
	2-Wire Analog Long Distance Terminal PBX Trunk - Bus			UEPSP	UEPLD	1.41	31.45	14.93	14.38	0.92		15.75				
	2-Wire Voice Unbundled PBX LD Terminal Ports			UEPSP	UEPLD	1.41	31.45	14.93	14.38	0.92		15.75				
	2-Wire Vice Unbundled 2-Way PBX Usage Port			UEPSP	UEPXA	1.41	31.45	14.93	14.38	0.92		15.75				
	2-Wire Voice Unbundled PBX Toll Terminal Hotel Ports			UEPSP	UEPXB	1.41	31.45	14.93	14.38	0.92		15.75				
	2-Wire Voice Unbundled PBX LD DDD Terminals Port			UEPSP	UEPXC	1.41	31.45	14.93	14.38	0.92		15.75				
	2-Wire Voice Unbundled PBX LD Terminal Switchboard Port			UEPSP	UEPXD	1.41	31.45	14.93	14.38	0.92		15.75				
	2-Wire Voice Unbundled PBX LD Terminal Switchboard IDD Capable Port			UEPSP	UEPXE	1.41	31.45	14.93	14.38	0.92		15.75				
	2-Wire Voice Unbundled 2-Way PBX Hotel/Hospital Economy Administrative Calling Port			UEPSP	UEPXL	1.41	31.45	14.93	14.38	0.92		15.75				
	2-Wire Voice Unbundled 2-Way PBX Hotel/Hospital Economy Room Calling Port			UEPSP	UEPXM	1.41	31.45	14.93	14.38	0.92		15.75				
	2-Wire Voice Unbundled 1-Way Outgoing PBX Hotel/Hospital Discount Room Calling Port			UEPSP	UEPXO	1.41	31.45	14.93	14.38	0.92		15.75				
	2-Wire Voice Unbundled 2-Way PBX Mississippi Local Economy Calling Port			UEPSP	UEPXQ	1.41	31.45	14.93	14.38	0.92		15.75				
	2-Wire Voice Unbundled 2-Way PBX Mississippi Local Optional Calling Port			UEPSP	UEPXR	1.41	31.45	14.93	14.38	0.92		15.75				
	2-Wire Voice Unbundled 1-Way Outgoing PBX Measured Port			UEPSP	UEPXS	1.41	31.45	14.93	14.38	0.92		15.75				
	Subsequent Activity			UEPSP	USASC	0.00	0.00	0.00				15.75				
FEATURES																
	All Available Vertical Features			UEPSP UEPSE	UEPVF	2.56	0.00	0.00				15.75				
EXCHANGE PORT RATES (COIN)																
	Exchange Ports - Coin Port					1.41	2.39	2.29	1.42	1.33		15.75				
NOTE: Transmission/usage charges associated with POTS circuit switched usage will also apply to circuit switched voice and/or circuit switched data transmission by B-Channels associated with 2-wire ISDN ports.																
NOTE: Access to B Channel or D Channel Packet capabilities will be available only through BFR/New Business Request Process. Rates for the packet capabilities will be determined via the Bona Fide Request/New Business Request Process.																
UNBUNDLED LOCAL EXCHANGE SWITCHING(PORTS)																
EXCHANGE PORT RATES (DID & PBX)																
	Exchange Ports - 2-Wire DID Port			UEPEX	UEPP2	8.25	120.00	18.85	61.77	3.88		15.75			1.97	
	Exchange Ports - DDITS Port - 4-Wire DS1 Port with DID capability			UEPDD	UEPDD	58.41	203.19	96.25	74.86	2.54		15.75			1.97	
	Exchange Ports - 2-Wire ISDN Port (See Notes below.)			UEPTX UEPSX	U1PMA	13.69	73.19	53.30	47.90	10.76		15.75			1.97	
	All Features Offered			UEPTX UEPSX	UEPVF	2.56	0.00	0.00				15.75			1.97	
NOTE: Transmission/usage charges associated with POTS circuit switched usage will also apply to circuit switched voice and/or circuit switched data transmission by B-Channels associated with 2-wire ISDN ports.																
NOTE: Access to B Channel or D Channel Packet capabilities will be available only through BFR/New Business Request Process. Rates for the packet capabilities will be determined via the Bona Fide Request/New Business Request Process.																
	Exchange Ports - 2-Wire ISDN Port -- Channel Profiles			UEPTX UEPSX	U1UMA	0.00	0.00	0.00								
	Exchange Ports - 4-Wire ISDN DS1 Port			UEPEX	UEPEX	84.63	205.00	102.14	81.65	20.69		15.75			1.97	
UNBUNDLED LOCAL SWITCHING, PORT USAGE																
End Office Switching (Port Usage)																
	End Office Switching Function, Per MOU					0.0010269										
	End Office Trunk Port - Shared, Per MOU					0.000161										
Tandem Switching (Port Usage) (Local or Access Tandem)																
	Tandem Switching Function Per MOU					0.0001723										
	Tandem Trunk Port - Shared, Per MOU					0.0001828										
Common Transport																
	Common Transport - Per Mile, Per MOU					0.0000026										
	Common Transport - Facilities Termination Per MOU					0.0004541										

CATEGORY	RATE ELEMENTS	Interim	Zone	BCS	USOC	RATES($) Rec	Nonrecurring First	Nonrecurring Add'l	Nonrecurring Disconnect First	Nonrecurring Disconnect Add'l	Svc Order Submitted Elec per LSR	Svc Order Submitted Manually per LSR	Incremental Charge - Manual Svc Order vs. Electronic-1st	Incremental Charge - Manual Svc Order vs. Electronic-Add'l	Incremental Charge - Manual Svc Order vs. Electronic-Disc 1st	Incremental Charge - Manual Svc Order vs. Electronic-Disc Add'l
											OSS Rates($)					
											SOMEC	SOMAN	SOMAN	SOMAN	SOMAN	SOMAN
UNBUNDLED PORT/LOOP COMBINATIONS - COST BASED RATES																
	Cost Based Rates are applied where BellSouth is required by FCC and/or State Commission rule to provide Unbundled Local Switching or Switch Ports.															
	Features shall apply to the Unbundled Port/Loop Combination - Cost Based Rate section in the same manner as they are applied to the Stand-Alone Unbundled Port section of this Rate Exhibit.															
	End Office and Tandem Switching Usage and Common Transport Usage rates in the Port section of this rate exhibit shall apply to all combinations of loop/port network elements except for UNE Coin Port/Loop Combinations.															
	For Georgia, Kentucky, Louisiana, Mississippi, South Carolina and Tennessee, the recurring UNE Port and Loop charges listed apply to Currently Combined and Not Currently Combined Combos. The first and additional Port nonrecurring charges apply to Not Currently Combined Combos for all states. In GA, KY, LA, MS, SC and TN these nonrecurring charges are commission ordered cost based rates and in AL, FL and NC these nonrecurring charges are Market Rates and are also listed in the Market Rate section. For Currently Combined Combos in all other states, the nonrecurring charges shall be those identified in the Nonrecurring - Currently Combined sections.															
	2-WIRE VOICE GRADE LOOP WITH 2-WIRE LINE PORT (RES)															
	UNE Port/Loop Combination Rates															
	2-Wire VG Loop/Port Combo - Zone 1		1			12.22										
	2-Wire VG Loop/Port Combo - Zone 2		2			17.13										
	2-Wire VG Loop/Port Combo - Zone 3		3			26.26										
	2-Wire VG Loop/Port Combo - Zone 4		4			44.91										
	UNE Loop Rates															
	2-Wire Voice Grade Loop (SL1) - Zone 1		1	UEPRX	UEPLX	10.98										
	2-Wire Voice Grade Loop (SL1) - Zone 2		2	UEPRX	UEPLX	15.91										
	2-Wire Voice Grade Loop (SL1) - Zone 3		3	UEPRX	UEPLX	25.04										
	2-Wire Voice Grade Loop (SL1) - Zone 4		4	UEPRX	UEPLX	43.68										
	2-Wire Voice Grade Line Port Rates (Res)															
	2-Wire voice unbundled port - residence			UEPRX	UEPRL	1.23	40.31	19.84	24.90	6.58		15.75				
	2-Wire voice unbundled port with Caller ID - res			UEPRX	UEPRC	1.23	40.31	19.84	24.90	6.58		15.75				
	2-Wire voice unbundled port outgoing only - res			UEPRX	UEPRO	1.23	40.31	19.84	24.90	6.58		15.75				
	2-Wire voice Grade unbundled Mississippi extended local dialing parity port with Caller ID - res			UEPRX	UEPAT	1.23	40.31	19.84	24.90	6.58		15.75				
	2-Wire voice unbundles res, low usage line port with Caller ID (LUM)			UEPRX	UEPAP	1.23	40.31	19.84	24.90	6.58		15.75				
	FEATURES															
	All Features Offered			UEPRX	UEPVF	2.56	0.00	0.00				15.75				
	LOCAL NUMBER PORTABILITY															
	Local Number Portability (1 per port)			UEPRX	LNPCX	0.35										
	NONRECURRING CHARGES (NRCs) - CURRENTLY COMBINED															
	2-Wire Voice Grade Loop / Line Port Combination - Conversion - Switch-as-is			UEPRX	USAC2		0.0988	0.0988				15.75				
	2-Wire Voice Grade Loop / Line Port Combination - Conversion - Switch with change			UEPRX	USACC		0.0988	0.0988				15.75				
	2-Wire Voice Grade Loop / Line Port Combination - Conversion - Subsequent Database Update						0.00	0.00				15.75				
	ADDITIONAL NRCs															
	2-Wire Voice Grade Loop/Line Port Combination - Subsequent Activity			UEPRX	USAS2	0.00	0.00	0.00				15.75				
	2-WIRE VOICE GRADE LOOP WITH 2-WIRE LINE PORT (BUS)															
	UNE Port/Loop Combination Rates															
	2-Wire VG Loop/Port Combo - Zone 1		1			12.22										
	2-Wire VG Loop/Port Combo - Zone 2		2			17.13										
	2-Wire VG Loop/Port Combo - Zone 3		3			26.26										
	UNE Loop Rates															
	2-Wire Voice Grade Loop (SL1) - Zone 1		1	UEPBX	UEPLX	10.98										
	2-Wire Voice Grade Loop (SL1) - Zone 2		2	UEPBX	UEPLX	15.91										
	2-Wire Voice Grade Loop (SL1) - Zone 3		3	UEPBX	UEPLX	25.04										
	2-Wire Voice Grade Loop (SL1) - Zone 4		4	UEPBX	UEPLX	43.68										
	2-Wire Voice Grade Line Port (Bus)															
	2-Wire voice unbundled port without Caller ID - bus			UEPBX	UEPBL	1.23	40.31	19.84	24.90	6.58		15.75				
	2-Wire voice unbundled port with Caller + E484 ID - bus			UEPBX	UEPBC	1.23	40.31	19.84	24.90	6.58		15.75				
	2-Wire voice unbundled port outgoing only - bus			UEPBX	UEPBO	1.23	40.31	19.84	24.90	6.58		15.75				
	2-Wire voice Grade unbundled Mississippi extended local dialing parity port with Caller ID - bus			UEPBX	UEPAY	1.23	40.31	19.84	24.90	6.58		15.75				
	2-Wire voice unbundled incoming only port with Caller ID - Bus			UEPBX	UPEB1	1.23	40.31	19.84	24.90	6.58		15.75				
	LOCAL NUMBER PORTABILITY															
	Local Number Portability (1 per port)			UEPBX	LNPCX	0.35										

CATEGORY	RATE ELEMENTS	Interim	Zone	BCS	USOC	RATES($) Rec	Nonrecurring First	Nonrecurring Add'l	Nonrecurring Disconnect First	Nonrecurring Disconnect Add'l	Svc Order Submitted Elec per LSR	Svc Order Submitted Manually per LSR	Incremental Charge - Manual Svc Order vs. Electronic-1st	Incremental Charge - Manual Svc Order vs. Electronic-Add'l	Incremental Charge - Manual Svc Order vs. Electronic-Disc 1st	Incremental Charge - Manual Svc Order vs. Electronic-Disc Add'l
											OSS Rates($)					
											SOMEC	SOMAN	SOMAN	SOMAN	SOMAN	SOMAN
FEATURES																
	All Features Offered			UEPBX	UEPVF	2.56	0.00	0.00				15.75				
NONRECURRING CHARGES (NRCs) - CURRENTLY COMBINED																
	2-Wire Voice Grade Loop / Line Port Combination - Conversion - Switch-as-is			UEPBX	USAC2		0.0988	0.0988				15.75				
	2-Wire Voice Grade Loop / Line Port Combination - Conversion - Switch with change			UEPBX	USACC		0.0988	0.0988				15.75				
	2-Wire Voice Grade Loop / Line Port Combination - Conversion - Subsequent Database Update						0.00	0.00				15.75				
ADDITIONAL NRCs																
	2-Wire Voice Grade Loop/Line Port Combination - Subsequent Activity			UEPBX	USAS2		0.00	0.00				15.75				
2-WIRE VOICE GRADE LOOP WITH 2-WIRE LINE PORT (RES - PBX)																
UNE Port/Loop Combination Rates																
	2-Wire VG Loop/Port Combo - Zone 1		1			12.22										
	2-Wire VG Loop/Port Combo - Zone 2		2			17.13										
	2-Wire VG Loop/Port Combo - Zone 3		3			26.26										
	2-Wire VG Loop/Port Combo - Zone 4		4			44.91										
UNE Loop Rates																
	2-Wire Voice Grade Loop (SL 1) - Zone 1		1	UEPRG	UEPLX	10.98										
	2-Wire Voice Grade Loop (SL 1) - Zone 2		2	UEPRG	UEPLX	15.91										
	2-Wire Voice Grade Loop (SL 1) - Zone 3		3	UEPRG	UEPLX	25.04										
	2-Wire Voice Grade Loop (SL 1) - Zone 4		4	UEPRG	UEPLX	43.68										
2-Wire Voice Grade Line Port Rates (RES - PBX)																
	2-Wire VG Unbundled Combination 2-Way PBX Trunk Port - Res			UEPRG	UEPRD	1.23	69.37	32.48	37.86	6.17		15.75				
LOCAL NUMBER PORTABILITY																
	Local Number Portability (1 per port)			UEPRG	LNPCP	3.15	0.00	0.00				15.75				
FEATURES																
	All Features Offered			UEPRG	UEPVF	2.56	0.00	0.00				15.75				
NONRECURRING CHARGES (NRCs) - CURRENTLY COMBINED																
	2-Wire Voice Grade Loop/ Line Port Combination (PBX) - Conversion - Switch-As-Is			UEPRG	USAC2		7.96	1.91				15.75				
	2-Wire Voice Grade Loop/ Line Port Combination (PBX) - Conversion - Switch with Change			UEPRG	USACC		7.96	1.91				15.75				
	2-Wire Voice Grade Loop / Line Port Combination - Conversion - Subsequent Database Update						0.00	0.00				15.75				
ADDITIONAL NRCs																
	2-Wire Voice Grade Loop/ Line Port Combination (PBX) - Subsequent Activity			UEPRG	USAS2	0.00	0.00	0.00				15.75				
	PBX Subsequent Activity - Change/Rearrange Multiline Hunt Group						7.36	7.36				15.75				
2-WIRE VOICE GRADE LOOP WITH 2-WIRE LINE PORT (BUS - PBX)																
UNE Port/Loop Combination Rates																
	2-Wire VG Loop/Port Combo - Zone 1		1			12.22										
	2-Wire VG Loop/Port Combo - Zone 2		2			17.13										
	2-Wire VG Loop/Port Combo - Zone 3		3			26.26										
	2-Wire VG Loop/Port Combo - Zone 4		4			44.91										
UNE Loop Rates																
	2-Wire Voice Grade Loop (SL 1) - Zone 1		1	UEPPX	UEPLX	10.98										
	2-Wire Voice Grade Loop (SL 1) - Zone 2		2	UEPPX	UEPLX	15.91										
	2-Wire Voice Grade Loop (SL 1) - Zone 3		3	UEPPX	UEPLX	25.04										
	2-Wire Voice Grade Loop (SL 1) - Zone 4		4	UEPPX	UEPLX	43.68										
2-Wire Voice Grade Line Port Rates (BUS - PBX)																
	Line Side Unbundled Combination 2-Way PBX Trunk Port - Bus			UEPPX	UEPPC	1.23	69.37	32.48	37.86	6.17		15.75				
	Line Side Unbundled Outward PBX Trunk Port - Bus			UEPPX	UEPPO	1.23	69.37	32.48	37.86	6.17		15.75				
	Line Side Unbundled Incoming PBX Trunk Port - Bus			UEPPX	UEPP1	1.23	69.37	32.48	37.86	6.17		15.75				
	2-Wire Voice Unbundled PBX LD Terminal Ports			UEPPX	UEPLD	1.23	69.37	32.48	37.86	6.17		15.75				

CATEGORY	RATE ELEMENTS	Interim	Zone	BCS	USOC	RATES($) Rec	Nonrecurring First	Nonrecurring Add'l	Nonrecurring Disconnect First	Nonrecurring Disconnect Add'l	Svc Order Submitted Elec per LSR	Svc Order Submitted Manually per LSR	OSS Rates($) Incremental Charge - Manual Svc Order vs. Electronic-1st	OSS Rates($) Incremental Charge - Manual Svc Order vs. Electronic-Add'l	OSS Rates($) Incremental Charge - Manual Svc Order vs. Electronic-Disc 1st	OSS Rates($) Incremental Charge - Manual Svc Order vs. Electronic-Disc Add'l
											SOMEC	SOMAN	SOMAN	SOMAN	SOMAN	SOMAN
	2-Wire Voice Unbundled 2-Way Combination PBX Usage Port			UEPPX	UEPXA	1.23	69.37	32.48	37.86	6.17		15.75				
	2-Wire Voice Unbundled PBX Toll Terminal Hotel Ports			UEPPX	UEPXB	1.23	69.37	32.48	37.86	6.17		15.75				
	2-Wire Voice Unbundled PBX LD DDD Terminals Port			UEPPX	UEPXC	1.23	69.37	32.48	37.86	6.17		15.75				
	2-Wire Voice Unbundled PBX LD Terminal Switchboard Port			UEPPX	UEPXD	1.23	69.37	32.48	37.86	6.17		15.75				
	2-Wire Voice Unbundled PBX LD Terminal Switchboard IDD Capable Port			UEPPX	UEPXE	1.23	69.37	32.48	37.86	6.17		15.75				
	2-Wire Voice Unbundled 2-Way PBX Hotel/Hospital Economy Administrative Calling Port			UEPPX	UEPXL	1.23	69.37	32.48	37.86	6.17		15.75				
	2-Wire Voice Unbundled 2-Way PBX Hotel/Hospital Economy Room Calling Port			UEPPX	UEPXM	1.23	69.37	32.48	37.86	6.17		15.75				
	2-Wire Voice Unbundled 1-Way Outgoing PBX Hotel/Hospital Discount Room Calling Port			UEPPX	UEPXO	1.23	69.37	32.48	37.86	6.17		15.75				
	2-Wire Voice Unbundled 2-Way PBX Mississippi Local Economy Calling Port			UEPPX	UEPXQ	1.23	69.37	32.48	37.86	6.17		15.75				
	2-Wire Voice Unbundled 2-Way PBX Mississippi Local Optional Calling Port			UEPPX	UEPXR	1.23	69.37	32.48	37.86	6.17		15.75				
	2-Wire Voice Unbundled 1-Way Outgoing PBX Measured Port			UEPPX	UEPXS	1.23	69.37	32.48	37.86	6.17		15.75				
LOCAL NUMBER PORTABILITY																
	Local Number Portability (1 per port)			UEPPX	LNPCP	3.15	0.00	0.00				15.75				
FEATURES																
	All Features Offered			UEPPX	UEPVF	2.56	0.00	0.00				15.75				
NONRECURRING CHARGES (NRCs) - CURRENTLY COMBINED																
	2-Wire Voice Grade Loop/ Line Port Combination (PBX) - Conversion - Switch-As-Is			UEPPX	USAC2		7.96	1.91				15.75				
	2-Wire Voice Grade Loop/ Line Port Combination (PBX) - Conversion - Switch with Change			UEPPX	USACC		7.96	1.91				15.75				
	2-Wire Voice Grade Loop / Line Port Combination - Conversion - Subsequent Database Update						0.00	0.00				15.75				
ADDITIONAL NRCs																
	2-Wire Voice Grade Loop/ Line Port Combination (PBX) - Subsequent Activity			UEPPX	USAS2	0.00	0.00	0.00				15.75				
	PBX Subsequent Activity - Change/Rearrange Multiline Hunt Group						7.36	7.36				15.75				
2-WIRE VOICE GRADE LOOP WITH 2-WIRE ANALOG LINE COIN PORT																
UNE Port/Loop Combination Rates																
	2-Wire VG Coin Port/Loop Combo – Zone 1		1			12.22										
	2-Wire VG Coin Port/Loop Combo – Zone 2		2			17.13										
	2-Wire VG Coin Port/Loop Combo – Zone 3		3			26.26										
	2-Wire VG Coin Port/Loop Combo – Zone 4		4			44.91										
UNE Loop Rates																
	2-Wire Voice Grade Loop (SL1) - Zone 1		1	UEPCO	UEPLX	10.98										
	2-Wire Voice Grade Loop (SL1) - Zone 2		2	UEPCO	UEPLX	15.91										
	2-Wire Voice Grade Loop (SL1) - Zone 3		3	UEPCO	UEPLX	25.04										
	2-Wire Voice Grade Loop (SL1) - Zone 4		4	UEPCO	UEPLX	43.68										
2-Wire Voice Grade Line Ports (COIN)																
	2-Wire Coin 2-Way without Operator Screening and without Blocking (AL, KY, LA, MS)			UEPCO	UEPRF	1.23	40.31	19.84	24.90	6.58		15.75				
	2-Wire Coin 2-Way without Operator Screening and without Blocking; with Dialing Parity (Note 3) (MS)			UEPCO	UEPMC	1.23	40.31	19.84	24.90	6.58		15.75				
	2-Wire Coin 2-Way with Operator Screening and Blocking: 011, 900/976, 1+DDD (AL, KY, LA, MS)			UEPCO	UEPRA	1.23	40.31	19.84	24.90	6.58		15.75				
	2-Wire Coin 2-W with Operator Screening and Blocking: 011, 900/976, 1+DDD; with Dialing Parity (MS)			UEPCO	UEPMA	1.23	40.31	19.84	24.90	6.58		15.75				
	2-Wire Coin 2-Way with Operator Screening and 011 Blocking (AL, LA, MS)			UEPCO	UEPRB	1.23	40.31	19.84	24.90	6.58		15.75				
	2-Wire Coin 2-Way with Operator Screening and 011 Blocking; with Dialing Parity (MS)			UEPCO	UEPMB	1.23	40.31	19.84	24.90	6.58		15.75				
	2-Wire Coin 2-Way with Operator Screening & Blocking: 900/976, 1+DDD, 011+, & Local (AL, KY, LA, MS)			UEPCO	UEPCD	1.23	40.31	19.84	24.90	6.58		15.75				

UNBUNDLED NETWORK ELEMENTS - Mississippi													Attachment: 2		Exhibit: B	
CATEGORY	RATE ELEMENTS	Interim	Zone	BCS	USOC	RATES($)					Svc Order Submitted Elec per LSR	Svc Order Submitted Manually per LSR	Incremental Charge - Manual Svc Order vs. Electronic-1st	Incremental Charge - Manual Svc Order vs. Electronic-Add'l	Incremental Charge - Manual Svc Order vs. Electronic-Disc 1st	Incremental Charge - Manual Svc Order vs. Electronic-Disc Add'l
						Rec	Nonrecurring		Nonrecurring Disconnect		OSS Rates($)					
							First	Add'l	First	Add'l	SOMEC	SOMAN	SOMAN	SOMAN	SOMAN	SOMAN
	2-Wire Coin 2-W Operator Screening: 900 Block: 900/976, 1+DDD, 011+, Local; with Dialing Parity (MS)			UEPCO	UEPCJ	1.23	40.31	19.84	24.90	6.58		15.75				
	2-Wire Coin Outward without Blocking and without Operator Screening (KY, LA, MS)			UEPCO	UEPRN	1.23	40.31	19.84	24.90	6.58		15.75				
	2-Wire Coin Outward without Blocking and without Operator Screening; With Dailing Parity (MS)			UEPCO	UEPME	1.23	40.31	19.84	24.90	6.58		15.75				
	2-Wire Coin Outward with Operator Screening and 011 Blocking (GA, KY, MS)			UEPCO	UEPRJ	1.23	40.31	19.84	24.90	6.58		15.75				
	2-Wire Coin Outward with Operator Screening and 011 Blocking; with Dialing Parity (MS)			UEPCO	UEPMD	1.23	40.31	19.84	24.90	6.58		15.75				
	2-Wire Coin Outward with Operator Screening and Blocking: 011, 900/976, 1+DDD (AL, KY, LA, MS)			UEPCO	UEPRH	1.23	40.31	19.84	24.90	6.58		15.75				
	2-Wire Coin Outward Operator Screening & Blocking: 900/976, 1+DDD, 011+, and Local (AL, KY, LA, MS)			UEPCO	UEPCN	1.23	40.31	19.84	24.90	6.58		15.75				
	2-Wire Coin Out Operator Screen & Block: 900/976, 1+DDD, 011+, and Local; with Dialing Parity (MS)			UEPCO	UEPCS	1.23	40.31	19.84	24.90	6.58		15.75				
	2-Wire 2-Way Smartline with 900/976 (all states except LA)			UEPCO	UEPCK	1.23	40.31	19.84	24.90	6.58		15.75				
	2-Wire Coin Outward Smartline with 900/976 (all states except LA)			UEPCO	UEPCR	1.23	40.31	19.84	24.90	6.58		15.75				
ADDITIONAL UNE COIN PORT/LOOP (RC)																
	UNE Coin Port/Loop Combo Usage (Flat Rate)			UEPCO	URECU	4.62	0.00	0.00								
LOCAL NUMBER PORTABILITY																
	Local Number Portability (1 per port)			UEPCO	LNPCX	0.35										
NONRECURRING CHARGES - CURRENTLY COMBINED																
	2-Wire Voice Grade Loop / Line Port Combination - Conversion - Switch-as-is			UEPCO	USAC2		0.0988	0.0988				15.75				
	2-Wire Voice Grade Loop / Line Port Combination - Conversion - Switch with change			UEPCO	USACC		0.0988	0.0988				15.75				
ADDITIONAL NRCs																
	2-Wire Voice Grade Loop/Line Port Combination - Subsequent Activity			UEPCO	USAS2		0.00	0.00				15.75				
UNBUNDLED REMOTE CALL FORWARDING - RES																
Non-Recurring																
UNBUNDLED REMOTE CALL FORWARDING - Bus																
	Unbundled Remote Call Forwarding, InterState/Intra LATA-Bus			UEPVB	UEPVJ	1.41	2.39	2.29	1.42	1.33		15.75				
Non-Recurring																
2-WIRE VOICE LOOP/ 2WIRE VOICE GRADE IO TRANSPORT/ 2-WIRE LINE PORT (RES)																
2-WIRE VOICE LOOP/ 2WIRE VOICE GRADE IO TRANSPORT/ 2-WIRE LINE PORT (BUS)																
UNBUNDLED PORT/LOOP COMBINATIONS - COST BASED RATES																
2-WIRE VOICE GRADE LOOP- BUS ONLY - WITH 2-WIRE DID TRUNK PORT																
UNE Port/Loop Combination Rates																
	2-Wire VG Loop/2-Wire DID Trunk Port Combo - UNE Zone 1		1			21.32										
	2-Wire VG Loop/2-Wire DID Trunk Port Combo - UNE Zone 2		2			26.16										
	2-Wire VG Loop/2-Wire DID Trunk Port Combo - UNE Zone 3		3			34.98										
	2-Wire VG Loop/2-Wire DID Trunk Port Combo - UNE Zone 4		4			53.15										
UNE Loop Rates																
	2-Wire Analog Voice Grade Loop - (SL2) - UNE Zone 1		1	UEPPX	UECD1	13.89										
	2-Wire Analog Voice Grade Loop - (SL2) - UNE Zone 2		2	UEPPX	UECD1	18.75										
	2-Wire Analog Voice Grade Loop - (SL2) - UNE Zone 3		3	UEPPX	UECD1	27.55										
	2-Wire Analog Voice Grade Loop - (SL2) - UNE Zone 4		4	UEPPX	UECD1	45.72										
UNE Port Rate																
	Exchange Ports - 2-Wire DID Port			UEPPX	UEPD1	7.43	225.96	87.13	114.59	14.25		15.75			1.97	
NONRECURRING CHARGES - CURRENTLY COMBINED																
	2-Wire Voice Grade Loop / 2-Wire DID Trunk Port Combination - Switch-as-is			UEPPX	USAC1		7.35	1.88				15.75			1.97	
	2-Wire Voice Grade Loop / 2-Wire DID Trunk Port Conversion with BellSouth Allowable Changes			UEPPX	USA1C		7.35	1.88				15.75			1.97	
ADDITIONAL NRCs																
	2-Wire DID Subsequent Activity - Add Trunks, Per Trunk			UEPPX	USAS1		26.94	26.94				15.75			1.97	

CATEGORY	RATE ELEMENTS	Interim	Zone	BCS	USOC	RATES($) Rec	Nonrecurring First	Nonrecurring Add'l	Nonrecurring Disconnect First	Nonrecurring Disconnect Add'l	Svc Order Submitted Elec per LSR	Svc Order Submitted Manually per LSR	Incremental Charge - Manual Svc Order vs. Electronic- 1st	Incremental Charge - Manual Svc Order vs. Electronic- Add'l	Incremental Charge - Manual Svc Order vs. Electronic- Disc 1st	Incremental Charge - Manual Svc Order vs. Electronic- Disc Add'l
											OSS Rates($)					
											SOMEC	SOMAN	SOMAN	SOMAN	SOMAN	SOMAN
Telephone Number/Trunk Group Establisment Charges																
	DID Trunk Termination (One Per Port)			UEPPX	NDT	0.00	0.00	0.00				15.75			1.97	
	Additional DID Numbers for each Group of 20 DID Numbers			UEPPX	ND4	0.00	0.00	0.00				15.75			1.97	
	DID Numbers, Non- consecutive DID Numbers , Per Number			UEPPX	ND5	0.00	0.00	0.00				15.75			1.97	
	Reserve Non-Consecutive DID numbers			UEPPX	ND6	0.00	0.00	0.00				15.75			1.97	
	Reserve DID Numbers			UEPPX	NDV	0.00	0.00	0.00				15.75			1.97	
LOCAL NUMBER PORTABILITY																
	Local Number Portability (1 per port)			UEPPX	LNPCP	3.15	0.00	0.00								
2-WIRE ISDN DIGITAL GRADE LOOP WITH 2-WIRE ISDN DIGITAL LINE SIDE PORT																
UNE Port/Loop Combination Rates																
	2W ISDN Digital Grade Loop/2W ISDN Digital Line Side Port - UNE Zone 1		1	UEPPB UEPPR		28.59										
	2W ISDN Digital Grade Loop/2W ISDN Digital Line Side Port - UNE Zone 2		2	UEPPB UEPPR		35.00										
	2W ISDN Digital Grade Loop/2W ISDN Digital Line Side Port - UNE Zone 3		3	UEPPB UEPPR		45.18										
	2W ISDN Digital Grade Loop/2W ISDN Digital Line Side Port - UNE Zone 4		4			67.61										
UNE Loop Rates																
	2-Wire ISDN Digital Grade Loop - UNE Zone 1		1	UEPPB UEPPR	USL2X	18.26						15.75			1.97	
	2-Wire ISDN Digital Grade Loop - UNE Zone 2		2	UEPPB UEPPR	USL2X	24.67						15.75			1.97	
	2-Wire ISDN Digital Grade Loop - UNE Zone 3		3	UEPPB UEPPR	USL2X	34.85						15.75			1.97	
	2-Wire ISDN Digital Grade Loop - UNE Zone 4		4	UEPPB UEPPR	USL2X	57.28						15.75			1.97	
UNE Port Rate																
	Exchange Port - 2-Wire ISDN Line Side Port			UEPPB UEPPR	UEPPB	10.33	190.80	133.22	100.72	21.13		15.75			1.97	
NONRECURRING CHARGES - CURRENTLY COMBINED																
	2-Wire ISDN Digital Grade Loop / 2-Wire ISDN Line Side Port Combination - Conversion			UEPPB UEPPR	USACB	0.00	38.73	27.17				15.75			1.97	
ADDITIONAL NRCs																
LOCAL NUMBER PORTABILITY																
	Local Number Portability (1 per port)			UEPPB UEPPR	LNPCX	0.35	0.00	0.00								
B-CHANNEL USER PROFILE ACCESS:																
	CVS/CSD (DMS/5ESS)			UEPPB UEPPR	U1UCA	0.00	0.00	0.00								
	CVS (EWSD)			UEPPB UEPPR	U1UCB	0.00	0.00	0.00								
	CSD			UEPPB UEPPR	U1UCC	0.00	0.00	0.00								
B-CHANNEL AREA PLUS USER PROFILE ACCESS: (AL,KY,LA,MS SC,MS, & TN)																
	CVS/CSD (DMS/5ESS)			UEPPB UEPPR	U1UCD	0.00	0.00	0.00								
	CVS (EWSD)			UEPPB UEPPR	U1UCE	0.00	0.00	0.00								
	CSD			UEPPB UEPPR	U1UCF	0.00	0.00	0.00								
USER TERMINAL PROFILE																
	User Terminal Profile (EWSD only)			UEPPB UEPPR	U1UMA	0.00	0.00	0.00								
VERTICAL FEATURES																
	All Vertical Features - One per Channel B User Profile			UEPPB UEPPR	UEPVF	2.56	0.00	0.00				15.75			1.97	
INTEROFFICE CHANNEL MILEAGE																
	Interoffice Channel mileage each, including first mile and facilities termination			UEPPB UEPPR	M1GNC	22.5298	40.77	27.57	17.26	7.11		15.75			1.97	
	Interoffice Channel mileage each, additional mile			UEPPB UEPPR	M1GNM	0.0098	0.00	0.00								
4-WIRE DS1 DIGITAL LOOP WITH 4-WIRE ISDN DS1 DIGITAL TRUNK PORT																
UNE Port/Loop Combination Rates																
	4W DS1 Digital Loop/4W ISDN DS1 Digital Trunk Port - UNE Zone 1		1	UEPPP		155.43										
	4W DS1 Digital Loop/4W ISDN DS1 Digital Trunk Port - UNE Zone 2		2	UEPPP		205.74										
	4W DS1 Digital Loop/4W ISDN DS1 Digital Trunk Port - UNE Zone 3		3	UEPPP		283.10										
	4W DS1 Digital Loop/4W ISDN DS1 Digital Trunk Port - UNE Zone 4		4	UEPPP		534.81										
UNE Loop Rates																

UNBUNDLED NETWORK ELEMENTS - Mississippi													Attachment: 2		Exhibit: B	
CATEGORY	RATE ELEMENTS	Interim	Zone	BCS	USOC	RATES($)					Svc Order Submitted Elec per LSR	Svc Order Submitted Manually per LSR	Incremental Charge - Manual Svc Order vs. Electronic-1st	Incremental Charge - Manual Svc Order vs. Electronic-Add'l	Incremental Charge - Manual Svc Order vs. Electronic-Disc 1st	Incremental Charge - Manual Svc Order vs. Electronic-Disc Add'l
						Rec	Nonrecurring		Nonrecurring Disconnect		OSS Rates($)					
							First	Add'l	First	Add'l	SOMEC	SOMAN	SOMAN	SOMAN	SOMAN	SOMAN
	4-Wire DS1 Digital Loop - UNE Zone 1		1	UEPPP	USL4P	79.08						15.75			1.97	
	4-Wire DS1 Digital Loop - UNE Zone 2		2	UEPPP	USL4P	129.38						15.75			1.97	
	4-Wire DS1 Digital Loop - UNE Zone 3		3	UEPPP	USL4P	206.74						15.75			1.97	
	4-Wire DS1 Digital Loop - UNE Zone 4		4	UEPPP	USL4P	458.46						15.75			1.97	
UNE Port Rate																
	Exchange Ports - 4-Wire ISDN DS1 Port			UEPPP	UEPPP	76.35	458.93	260.59	127.75	32.76		15.75			1.97	
NONRECURRING CHARGES - CURRENTLY COMBINED																
	4-Wire DS1 Digital Loop / 4-Wire ISDN DS1 Digital Trunk Port Combination - Conversion -Switch-as-is			UEPPP	USACP	0.00	119.76	79.01				15.75			1.97	
ADDITIONAL NRCs																
	4-Wire DS1 Loop/4-W ISDN Digtl Trk Port - Subsqt Actvy-Inward/two way tel nos within Std Allowance (except NC)			UEPPP	PR7TF		0.49					15.75			1.97	
	4-Wire DS1 Loop / 4-Wire ISDN DS1 Digital Trunk Port - Outward Tel Numbers (All States except NC)			UEPPP	PR7TO		11.58	11.58				15.75			1.97	
	4-Wire DS1 Loop / 4-Wire ISDN DS1 Digital Trk Port - Subsequent Inward Tel Nos Above Std Allowance			UEPPP	PR7ZT		23.15	23.15				15.75			1.97	
LOCAL NUMBER PORTABILITY																
	Local Number Portability (1 per port)			UEPPP	LNPCN	1.75										
INTERFACE (Provsioning Only)																
	Voice/Data			UEPPP	PR71V	0.00	0.00	0.00								
	Digital Data			UEPPP	PR71D	0.00	0.00	0.00								
	Inward Data			UEPPP	PR71E	0.00	0.00	0.00								
New or Additional "B" Channel																
	New or Additional - Voice/Data B Channel			UEPPP	PR7BV	0.00	14.61					15.75			1.97	
	New or Additional - Digital Data B Channel			UEPPP	PR7BF	0.00	14.61					15.75			1.97	
	New or Additional Inward Data B Channel			UEPPP	PR7BD	0.00	14.61					15.75			1.97	
CALL TYPES																
	Inward			UEPPP	PR7C1	0.00	0.00	0.00								
	Outward			UEPPP	PR7C0	0.00	0.00	0.00								
	Two-way			UEPPP	PR7CC	0.00	0.00	0.00								
Interoffice Channel Mileage																
	Fixed Each Including First Mile			UEPPP	1LN1A	57.53	89.79	82.28	16.66	14.90		15.75			1.97	
	Each Airline-Fractional Additional Mile			UEPPP	1LN1B	0.20										
4-WIRE DS1 DIGITAL LOOP WITH 4-WIRE DDITS TRUNK PORT																
UNE Port/Loop Combination Rates																
	4W DS1 Digital Loop/4W DDITS Trunk Port - UNE Zone 1		1	UEPDC		131.78						15.75			1.97	
	4W DS1 Digital Loop/4W DDITS Trunk Port - UNE Zone 2		2	UEPDC		182.07						15.75			1.97	
	4W DS1 Digital Loop/4W DDITS Trunk Port - UNE Zone 3		3	UEPDC		259.44						15.75			1.97	
	4W DS1 Digital Loop/4W DDITS Trunk Port - UNE Zone 4		4	UEPDC		511.15						15.75			1.97	
UNE Loop Rates																
	4-Wire DS1 Digital Loop - UNE Zone 1		1	UEPDC	USLDC	79.08						15.75			1.97	
	4-Wire DS1 Digital Loop - UNE Zone 2		2	UEPDC	USLDC	129.38						15.75			1.97	
	4-Wire DS1 Digital Loop - UNE Zone 3		3	UEPDC	USLDC	206.74						15.75			1.97	
	4-Wire DS1 Digital Loop - UNE Zone 4		4	UEPDC	USLDC	458.46						15.75			1.97	
UNE Port Rate																
	4-Wire DDITS Digital Trunk Port			UEPDC	UDD1T	52.70	457.12	254.70	120.96	14.61		15.75			1.97	
NONRECURRING CHARGES - CURRENTLY COMBINED																
	4-Wire DS1 Digital Loop / 4-Wire DDITS Trunk Port Combination - Switch-as-is			UEPDC	USAC4		130.24	67.41				15.75			1.97	
	4-Wire DS1 Digital Loop / 4-Wire DDITS Trunk Port Combination - Conversion with DS1 Changes			UEPDC	USAWA		130.24	67.41				15.75			1.97	
	4-Wire DS1 Digital Loop / 4-Wire DDITS Trunk Port Combination - Conversion with Change - Trunk			UEPDC	USAWB		130.24	67.41				15.75			1.97	
ADDITIONAL NRCs																
	4-Wire DS1 Loop / 4-Wire DDITS Trunk Port - NRC - Subsequent Channel Activation/Chan - 2-Way Trunk			UEPDC	UDTTA		14.56	14.56				15.75			1.97	
	4-Wire DS1 Loop / 4-Wire DDITS Trunk Port - Subsequent Channel Activation/Chan - 1-Way Outward Trunk			UEPDC	UDTTB		14.56	14.56				15.75			1.97	

CATEGORY	RATE ELEMENTS	Interim	Zone	BCS	USOC	RATES($) Rec	Nonrecurring First	Nonrecurring Add'l	Nonrecurring Disconnect First	Nonrecurring Disconnect Add'l	Svc Order Submitted Elec per LSR	Svc Order Submitted Manually per LSR	Incremental Charge - Manual Svc Order vs. Electronic- 1st	Incremental Charge - Manual Svc Order vs. Electronic- Add'l	Incremental Charge - Manual Svc Order vs. Electronic- Disc 1st	Incremental Charge - Manual Svc Order vs. Electronic- Disc Add'l
											OSS Rates($)					
							First	Add'l	First	Add'l	SOMEC	SOMAN	SOMAN	SOMAN	SOMAN	SOMAN
	4-Wire DS1 Loop / 4-Wire DDITS Trunk Port - Subsqnt Channel Activation/Chan Inward Trunk w/out DID			UEPDC	UDTTC		14.56	14.56				15.75			1.97	
	4-Wire DS1 Loop / 4-Wire DDITS Trunk Port - Subsqnt Chan Activation Per Chan - Inward Trunk with DID			UEPDC	UDTTD		14.56	14.56				15.75			1.97	
	4-Wire DS1 Loop / 4-Wire DDITS Trunk Port - Subsqnt Chan Activation / Chan - 2-Way DID w User Trans			UEPDC	UDTTE		14.56	14.56				15.75			1.97	
BIPOLAR 8 ZERO SUBSTITUTION																
	B8ZS -Superframe Format			UEPDC	CCOSF		0.00	600.00				15.75			1.97	
	B8ZS - Extended Superframe Format			UEPDC	CCOEF		0.00	600.00				15.75			1.97	
Alternate Mark Inversion																
	AMI -Superframe Format			UEPDC	MCOSF		0.00	0.00								
	AMI - Extended SuperFrame Format			UEPDC	MCOPO		0.00	0.00								
Telephone Number/Trunk Group Establisment Charges																
	Telephone Number for 2-Way Trunk Group			UEPDC	UDTGX	0.00						15.75			1.97	
	Telephone Number for 1-Way Outward Trunk Group			UEPDC	UDTGY	0.00						15.75			1.97	
	Telephone Number for 1-Way Inward Trunk Group Without DID			UEPDC	UDTGZ	0.00						15.75			1.97	
	DID Numbers for each Group of 20 DID Numbers			UEPDC	ND4	0.00						15.75			1.97	
	DID Numbers, Non- consecutive DID Numbers , Per Number			UEPDC	ND5	0.00						15.75			1.97	
	Reserve Non-Consecutive DID Nos.			UEPDC	ND6	0.00	0.00	0.00				15.75			1.97	
	Reserve DID Numbers			UEPDC	NDV	0.00	0.00	0.00				15.75			1.97	
Dedicated DS1 (Interoffice Channel Mileage) - FX/FCO for 4-Wire DS1 Digital Loop with 4-Wire DDITS Trunk Port																
	Interoffice Channel Mileage - Fixed rate 0-8 miles (Facilities Termination)			UEPDC	1LNO1	57.33	89.79	82.28	16.86	14.90		15.75			1.97	
	Interoffice Channel Mileage - Additional rate per mile - 0-8 miles			UEPDC	1LNOA	0.20	0.00	0.00								
	Interoffice Channel Mileage - Fixed rate 9-25 miles (Facilities Termination)			UEPDC	1LNO2	0.00	0.00	0.00								
	Interoffice Channel Mileage - Additional rate per mile - 9-25 miles			UEPDC	1LNOB	0.20	0.00	0.00								
	Interoffice Channel Mileage - Fixed rate 25+ miles (Facilities Termination)			UEPDC	1LNO3	0.00	0.00	0.00	0.00							
	Interoffice Channel Mileage - Additional rate per mile - 25+ miles			UEPDC	1LNOC	0.20	0.00	0.00								
	Local Number Portability, per DS0 Activated			UEPDC	LNPCP	3.15	0.00	0.00	0.00							
	Central Office Termininating Point			UEPDC	CTG	0.00										
4-WIRE DS1 LOOP WITH CHANNELIZATION WITH PORT																
System is 1 DS1 Loop, 1 D4 Channel Bank, and up to 24 Feature Activations																
Each System can have up to 24 combinations of rates depending on type and number of ports used																
UNE DS1 Loop																
	4-Wire DS1 Loop - UNE Zone 1		1	UEPMG	USLDC	79.08	0.00	0.00								
	4-Wire DS1 Loop - UNE Zone 2		2	UEPMG	USLDC	129.38	0.00	0.00								
	4-Wire DS1 Loop - UNE Zone 3		3	UEPMG	USLDC	206.74	0.00	0.00								
	4-Wire DS1 Loop - UNE Zone 4		4	UEPMG	USLDC	458.46	0.00	0.00				15.75			1.97	
UNE DSO Channelization Capacities (D4 Channel Bank Configurations)																
	24 DSO Channel Capacity - 1 per DS1			UEPMG	VUM24	95.06	0.00	0.00				15.75			1.97	
	48 DSO Channel Capacity - 1 per 2 DS1s			UEPMG	VUM48	190.12	0.00	0.00				15.75			1.97	
	96 DSO Channel Capacity -1per 4 DS1s			UEPMG	VUM96	380.24	0.00	0.00				15.75			1.97	
	144 DS0 Channel Capacity - 1 per 6 DS1s			UEPMG	VUM14	570.36	0.00	0.00				15.75			1.97	
	192 DS0 Channel Capacity -1 per 8 DS1s			UEPMG	VUM19	760.48	0.00	0.00				15.75			1.97	
	240 DS0 Channel Capacity - 1 per 10 DS1s			UEPMG	VUM20	950.60	0.00	0.00				15.75			1.97	
	288 DS0 Channel Capacity - 1 per 12 DS1s			UEPMG	VUM28	1,140.72	0.00	0.00				15.75			1.97	
	384 DS0 Channel Capacity - 1 per 16 DS1s			UEPMG	VUM38	1,520.96	0.00	0.00				15.75			1.97	
	480 DS0 Channel Capacity - 1 per 20 DS1s			UEPMG	VUM40	1,901.20	0.00	0.00				15.75			1.97	
	576 DS0 Channel Capacity -1 per 24 DS1s			UEPMG	VUM57	2,281.44	0.00	0.00				15.75			1.97	
	672 DS0 Channel Capacity - 1 per 28 DS1s			UEPMG	VUM67	2,661.68	0.00	0.00				15.75			1.97	
Non-Recurring Charges (NRC) Associated with 4-Wire DS1 Loop with Channeliztion with Port - Conversion Charge Based on a System																
A Minimum System configuration is One (1) DS1, One (1) D4 Channel Bank, and Up To 24 DSO Ports with Feature Activations.																
Multiples of this configuration functioning as one are considered Add'l after the minimum system configuration is counted.																

UNBUNDLED NETWORK ELEMENTS - Mississippi													Attachment: 2		Exhibit: B	
CATEGORY	RATE ELEMENTS	Interim	Zone	BCS	USOC	RATES($)					Svc Order Submitted Elec per LSR	Svc Order Submitted Manually per LSR	Incremental Charge - Manual Svc Order vs. Electronic-1st	Incremental Charge - Manual Svc Order vs. Electronic-Add'l	Incremental Charge - Manual Svc Order vs. Electronic-Disc 1st	Incremental Charge - Manual Svc Order vs. Electronic-Disc Add'l
						Rec	Nonrecurring		Nonrecurring Disconnect		OSS Rates($)					
							First	Add'l	First	Add'l	SOMEC	SOMAN	SOMAN	SOMAN	SOMAN	SOMAN
	NRC - Conversion (Currently Combined) with or without BellSouth Allowed Changes			UEPMG	USAC4	0.00	151.35	8.41				15.75			1.97	
	System Additions at End User Locations Where 4-Wire DS1 Loop with Channelization with Port Combination Currently Exists and															
	New (Not Currently Combined) In GA, KY, LA, MS & TN Only															
	1 DS1/D4 Channel Bank - Add NRC for each Port and Assoc Fea Activation - New GA, LA, KY, MS, &TN Only			UEPMG	VUMD4	0.00	715.15	327.39	148.05	17.56		15.75			1.97	
	Bipolar 8 Zero Substitution															
	Clear Channel Capability Format, superframe - Subsequent Activity Only			UEPMG	CCOSF	0.00	0.00	600.00				15.75			1.97	
	Clear Channel Capability Format - Extended Superframe - Subsequent Activity Only			UEPMG	CCOEF	0.00	0.00	600.00				15.75			1.97	
	Alternate Mark Inversion (AMI)															
	Superframe Format			UEPMG	MCOSF	0.00	0.00	0.00								
	Extended Superframe Format			UEPMG	MCOPO	0.00	0.00	0.00								
	Exchange Ports Associated with 4-Wire DS1 Loop with Channelization with Port															
	Exchange Ports															
	Line Side Combination Channelized PBX Trunk Port - Business			UEPPX	UEPCX	1.23	0.00	0.00	0.00	0.00		15.75			1.97	
	Line Side Outward Channelized PBX Trunk Port - Business			UEPPX	UEPOX	1.23	0.00	0.00	0.00	0.00		15.75			1.97	
	Line Side Inward Only Channelized PBX Trunk Port without DID			UEPPX	UEP1X	1.23	0.00	0.00	0.00	0.00		15.75			1.97	
	2-Wire Trunk Side Unbundled Channelized DID Trunk Port			UEPPX	UEPDM	7.40	0.00	0.00	0.00	0.00		15.75			1.97	
	Feature Activations - Unbundled Loop Concentration															
	Feature (Service) Activation for each Line Side Port Terminated in D4 Bank			UEPPX	1PQWM	0.61	25.36	13.39	4.29	4.26		15.75			1.97	
	Feature (Service) Activation for each Trunk Side Port Terminated in D4 Bank			UEPPX	1PQWU	0.61	78.03	18.39	60.66	11.85		15.75			1.97	
	Telephone Number/ Group Establishment Charges for DID Service															
	DID Trunk Termination (1 per Port)			UEPPX	NDT	0.00	0.00	0.00				15.75			1.97	
	DID Numbers - groups of 20 - Valid all States			UEPPX	ND4	0.00	0.00	0.00				15.75			1.97	
	Non-Consecutive DID Numbers - per number			UEPPX	ND5	0.00	0.00	0.00				15.75			1.97	
	Reserve Non-Consecutive DID Numbers			UEPPX	ND6	0.00	0.00	0.00				15.75			1.97	
	Reserve DID Numbers			UEPPX	NDV	0.00	0.00	0.00				15.75			1.97	
	Local Number Portability															
	Local Number Portability - 1 per port			UEPPX	LNPCP	3.15	0.00	0.00								
	FEATURES - Vertical and Optional															
	Local Switching Features Offered with Line Side Ports Only															
	All Features Available			UEPPX	UEPVF	2.56	0.00	0.00				15.75			1.97	
	Market Rates shall apply where BellSouth is not required to provide unbundled local switching or switch ports per FCC and/or State Commission rules.															
	These scenarios include:															
	1. Unbundled port/loop combinations that are Not Currently Combined in Alabama, Florida and North Carolina.															
	2. Unbundled port/loop combinations that are Currently Combined or Not Currently Combined in Zone 1 of the Top 8 MSAS in BellSouth's region for end users with 4 or more DS0 equivalent lines.															
	The Top 8 MSAs in BellSouth's region are: FL (Orlando, Ft. Lauderdale, Miami); GA (Atlanta); LA (New Orleans); NC (Greensboro-Winston Salem-Highpoint/Charlotte-Gastonia-Rock Hill); TN (Nashville).															
	BellSouth currently is developing the billing capability to mechanically bill the recurring and non-recurring Market Rates in this section except for nonrecurring charges for not currently combined in AL, FL and NC. In the interim where BellSouth cannot bill Market Rates, BellSouth shall bill the rates in the Cost-Based section preceding in lieu of the Market Rates and reserves the right to true-up the billing difference.															
	The Market Rate for unbundled ports includes all available features in all states.															
	End Office and Tandem Switching Usage and Common Transport Usage rates in the Port section of this rate exhibit shall apply to all combinations of loop/port network elements except for UNE Coin Port/Loop Combinations which have a flat rate usage charge (USOC: URECU).															
	For Not Currently Combined scenarios where Market Rates apply, the Nonrecurring charges are listed in the First and Additional NRC columns for each Port USOC. For Currently Combined scenarios, the Nonrecurring charges are listed in the NRC - Currently Combined section. Additional NRCs may apply also and are categorized accordingly.															
	ADDITIONAL NRCs															
UNBUNDLED PORT/LOOP COMBINATIONS - MARKET BASED RATES																
	UNE DS1 Loop															
	Non-Recurring Charges (NRC) Associated with 4-Wire DS1 Loop with Channeliztion with Port - Conversion Charge Based on a System															
	A Minimum System configuration is One (1) DS1, One (1) D4 Channel Bank, and Up To 24 DSO Ports with Feature Activations.															
	Multiples of this configuration functioning as one are considered Add'l after the minimum system configuration is counted.															
UNBUNDLED CENTREX PORT/LOOP COMBINATIONS - COST BASED RATES																
	1. Cost Based Rates are applied where BellSouth is required by FCC and/or State Commission rule to provide Unbundled Local Switching or Switch Ports.															
	2. Features shall apply to the Unbundled Port/Loop Combination - Cost Based Rate section in the same manner as they are applied to the Stand-Alone Unbundled Port section of this Rate Exhibit.															

CATEGORY	RATE ELEMENTS	Interim	Zone	BCS	USOC	RATES($) Rec	Nonrecurring First	Nonrecurring Add'l	Nonrecurring Disconnect First	Nonrecurring Disconnect Add'l	Svc Order Submitted Elec per LSR	Svc Order Submitted Manually per LSR	Incremental Charge - Manual Svc Order vs. Electronic-1st	Incremental Charge - Manual Svc Order vs. Electronic-Add'l	Incremental Charge - Manual Svc Order vs. Electronic-Disc 1st	Incremental Charge - Manual Svc Order vs. Electronic-Disc Add'l
											OSS Rates($)					
											SOMEC	SOMAN	SOMAN	SOMAN	SOMAN	SOMAN
	3. End Office and Tandem Switching Usage and Common Transport Usage rates in the Port section of this rate exhibit shall apply to all combinations of loop/port network elements except for UNE Coin Port/Loop Combinations.															
	For Georgia, Kentucky, Louisiana, MIssissippi and Tennessee, the recurring UNE Port and Loop charges listed apply to Currently Combined and Not Currently Combined Combos. The the first and additional Port nonrecurring charges apply to Not Currently Combined Combos for all states. In GA, KY, LA, MS and TN these nonrecurring charges are commission ordered cost based rates and in AL, FL, NC and SC these nonrecurring charges are Market Rates and are listed in the Market Rate section. For Currently Combined Combos in all other states, the nonrecurring charges shall be those identified in the Nonrecurring - Currently Combined sections.															
	5. Market Rates for Unbundled Centrex Port/Loop Combination will be negotiated on an Individual Case Basis, until further notice.															
	UNE-P CENTREX - 1AESS - (Valid in AL,FL,GA,KY,LA,MS,&TN only)															
	2-Wire VG Loop/2-Wire Voice Grade Port (Centrex) Combo															
	UNE Port/Loop Combination Rates (Non-Design)															
	2-Wire VG Loop/2-Wire Voice Grade Port (Centrex) Port Combo - Non-Design		1	UEP91		12.22										
	2-Wire VG Loop/2-Wire Voice Grade Port (Centrex)Port Combo - Non-Design		2	UEP91		17.13										
	2-Wire VG Loop/2-Wire Voice Grade Port (Centrex)Port Combo - Non-Design		3	UEP91		26.26										
	2-Wire VG Loop/2-Wire Voice Grade Port (Centrex) Port Combo - Non-Design		4	UEP91		44.91										
	UNE Port/Loop Combination Rates (Design)															
	2-Wire VG Loop/2-Wire Voice Grade Port (Centrex) Port Combo - Design		1	UEP91		15.12										
	2-Wire VG Loop/2-Wire Voice Grade Port (Centrex)Port Combo - Design		2	UEP91		19.98										
	2-Wire VG Loop/2-Wire Voice Grade Port (Centrex)Port Combo - Design		3	UEP91		28.78										
	2-Wire VG Loop/2-Wire Voice Grade Port (Centrex) Port Combo - Design		4	UEP91		46.95										
	UNE Loop Rate															
	2-Wire Voice Grade Loop (SL 1) - Zone 1		1	UEP91	UECS1	10.98										
	2-Wire Voice Grade Loop (SL 1) - Zone 2		2	UEP91	UECS1	15.91										
	2-Wire Voice Grade Loop (SL 1) - Zone 3		3	UEP91	UECS1	25.04										
	2-Wire Voice Grade Loop (SL 1) - Zone 4		4	UEP91	UECS1	43.68										
	2-Wire Voice Grade Loop (SL 2) - Zone 1		1	UEP91	UECS2	13.89										
	2-Wire Voice Grade Loop (SL 2) - Zone 2		2	UEP91	UECS2	18.75										
	2-Wire Voice Grade Loop (SL 2) - Zone 3		3	UEP91	UECS2	27.55										
	2-Wire Voice Grade Loop (SL 2) - Zone 4		4	UEP91	UECS2	45.72										
	UNE Ports															
	All States (Except North Carolina and Sout Carolina)															
	2-Wire Voice Grade Port (Centrex) Basic Local Area			UEP91	UEPYA	1.23	40.31	19.84	24.90	6.58		15.75				
	2-Wire Voice Grade Port (Centrex 800 termination)Basic Local Area			UEP91	UEPYB	1.23	40.31	19.84	24.90	6.58		15.75				
	2-Wire Voice Grade Port (Centrex with Caller ID)1Basic Local Area			UEP91	UEPYH	1.23	40.31	19.84	24.90	6.58		15.75				
	2-Wire Voice Grade Port (Centrex from diff Serving Wire Center)2 Basic Local Area			UEP91	UEPYM	1.23	108.35	70.57	54.24	11.70		15.75				
	2-Wire Voice Grade Port, Diff Serving Wire Center - 800 Service Term - Basic Local Area			UEP91	UEPYZ	1.23	108.35	70.57	54.24	11.70		15.75				
	2-Wire Voice Grade Port terminated in on Megalink or equivalent - Basic Local Area			UEP91	UEPY9	1.23	40.31	19.84	24.90	6.58		15.75				
	2-Wire Voice Grade Port Terminated on 800 Service Term - Basic Local Area			UEP91	UEPY2	1.23	40.31	19.84	24.90	6.58		15.75				
	AL, KY, LA, MS, & TN Only															
	2-Wire Voice Grade Port (Centrex)			UEP91	UEPQA	1.23	40.31	19.84	24.90	6.58		15.75				
	2-Wire Voice Grade Port (Centrex 800 termination)			UEP91	UEPQB	1.23	40.31	19.84	24.90	6.58		15.75				
	2-Wire Voice Grade Port (Centrex with Caller ID)1			UEP91	UEPQH	1.23	40.31	19.84	24.90	6.58		15.75				
	2-Wire Voice Grade Port (Centrex from diff Serving Wire Center)2			UEP91	UEPQM	1.23	108.35	70.57	54.24	11.70		15.75				
	2-Wire Voice Grade Port, Diff Serving Wire Center - 800 Service Term			UEP91	UEPQZ	1.23	108.35	70.57	54.24	11.70		15.75				
	2-Wire Voice Grade Port terminated in on Megalink or equivalent			UEP91	UEPQ9	1.23	40.31	19.84	24.90	6.58		15.75				

UNBUNDLED NETWORK ELEMENTS - Mississippi														Attachment: 2		Exhibit: B	
CATEGORY		RATE ELEMENTS	Interim	Zone	BCS	USOC	RATES($)					Svc Order Submitted Elec per LSR	Svc Order Submitted Manually per LSR	Incremental Charge - Manual Svc Order vs. Electronic-1st	Incremental Charge - Manual Svc Order vs. Electronic-Add'l	Incremental Charge - Manual Svc Order vs. Electronic-Disc 1st	Incremental Charge - Manual Svc Order vs. Electronic-Disc Add'l
							Rec	Nonrecurring		Nonrecurring Disconnect		OSS Rates($)					
								First	Add'l	First	Add'l	SOMEC	SOMAN	SOMAN	SOMAN	SOMAN	SOMAN
		2-Wire Voice Grade Port Terminated on 800 Service Term			UEP91	UEPQ2	1.23	40.31	19.84	24.90	6.58		15.75				
	Local Switching																
		Centrex Intercom Funtionality, per port			UEP91	URECS	0.7947										
	Local Number Portability																
		Local Number Portability (1 per port)			UEP91	LNPCC	0.35										
	Features																
		All Standard Features Offered, per port			UEP91	UEPVF	2.56						15.75				
		All Select Features Offered, per port			UEP91	UEPVS	0.00	404.98					15.75				
		All Centrex Control Features Offered, per port			UEP91	UEPVC	2.56						15.75				
	NARS																
		Unbundled Network Access Register - Combination			UEP91	UARCX	0.00	0.00	0.00								
		Unbundled Network Access Register - Indial			UEP91	UAR1X	0.00	0.00	0.00								
		Unbundled Network Access Register - Outdial			UEP91	UAROX	0.00	0.00	0.00								
	Miscellaneous Terminations																
	2-Wire Trunk Side																
		Trunk Side Terminations, each			UEP91	CENA6	8.25	120.00	18.85	61.77	3.88		15.75				
	Interoffice Channel Mileage - 2-Wire																
		Interoffice Channel Facilities Termination - Voice Grade			UEP91	MIGBC	22.52	40.77	27.57	17.26	7.11		15.75				
		Interoffice Channel mileage, per mile or fraction of mile			UEP91	MIGBM	0.0098										
	Feature Activations (DS0) Centrex Loops on Channelized DS1 Service																
	D4 Channel Bank Feature Activations																
		Feature Activation on D-4 Channel Bank Centrex Loop Slot			UEP91	1PQWS	0.57										
		Feature Activation on D-4 Channel Bank FX line Side Loop Slot			UEP91	1PQW6	0.57										
		Feature Activation on D-4 Channel Bank FX Trunk Side Loop Slot			UEP91	1PQW7	0.57										
		Feature Activation on D-4 Channel Bank Centrex Loop Slot - Different Wire Center			UEP91	1PQWP	0.57										
		Feature Activation on D-4 Channel Bank Private Line Loop Slot			UEP91	1PQWV	0.57										
		Feature Activation on D-4 Channel Bank Tjie Line/Trunk Loop Slot			UEP91	1PQWQ	0.57										
		Feature Activation on D-4 Channel Bank WATS Loop Slot			UEP91	1PQWA	0.57										
	Non-Recurring Charges (NRC) Associated with UNE-P Centrex																
		Conversion - Currently Combined Switch-As-Is with allowed changes, per port			UEP91	USAC2		0.10	0.10				15.75				
		Conversion of Existing Centrex Common Block			UEP91	USACN		37.97	16.68				15.75				
		New Centrex Standard Common Block			UEP91	M1ACS	0.00	666.32					15.75				
		New Centrex Customized Common Block			UEP91	M1ACC	0.00	666.32					15.75				
		Secondary Block, per Block			UEP91	M2CC1	0.00	77.91					15.75				
		NAR Establishment Charge, Per Occasion			UEP91	URECA	0.00	72.63					15.75				
	UNE-P CENTREX - 5ESS (Valid in All States)																
	2-Wire VG Loop/2-Wire Voice Grade Port (Centrex) Combo																
	UNE Port/Loop Combination Rates (Non-Design)																
		2-Wire VG Loop/2-Wire Voice Grade Port (Centrex) Port Combo - Non-Design		1	UEP95		12.22										
		2-Wire VG Loop/2-Wire Voice Grade Port (Centrex)Port Combo - Non-Design		2	UEP95		17.13										
		2-Wire VG Loop/2-Wire Voice Grade Port (Centrex)Port Combo - Non-Design		3	UEP95		26.26										
		2-Wire VG Loop/2-Wire Voice Grade Port (Centrex) Port Combo - Non-Design		4	UEP95		44.91										
	UNE Port/Loop Combination Rates (Design)																
		2-Wire VG Loop/2-Wire Voice Grade Port (Centrex) Port Combo - Design		1	UEP95		15.12										
		2-Wire VG Loop/2-Wire Voice Grade Port (Centrex)Port Combo - Design		2	UEP95		19.98										
		2-Wire VG Loop/2-Wire Voice Grade Port (Centrex)Port Combo - Design		3	UEP95		28.78										

UNBUNDLED NETWORK ELEMENTS - Mississippi													Attachment: 2		Exhibit: B	
CATEGORY	RATE ELEMENTS	Interim	Zone	BCS	USOC	RATES($)					Svc Order Submitted Elec per LSR	Svc Order Submitted Manually per LSR	Incremental Charge - Manual Svc Order vs. Electronic-1st	Incremental Charge - Manual Svc Order vs. Electronic-Add'l	Incremental Charge - Manual Svc Order vs. Electronic-Disc 1st	Incremental Charge - Manual Svc Order vs. Electronic-Disc Add'l
						Rec	Nonrecurring		Nonrecurring Disconnect		OSS Rates($)					
							First	Add'l	First	Add'l	SOMEC	SOMAN	SOMAN	SOMAN	SOMAN	SOMAN
	2-Wire VG Loop/2-Wire Voice Grade Port (Centrex) Port Combo - Design		4	UEP95		46.95										
UNE Loop Rate																
	2-Wire Voice Grade Loop (SL 1) - Zone 1		1	UEP95	UECS1	10.98										
	2-Wire Voice Grade Loop (SL 1) - Zone 2		2	UEP95	UECS1	15.91										
	2-Wire Voice Grade Loop (SL 1) - Zone 3		3	UEP95	UECS1	25.04										
	2-Wire Voice Grade Loop (SL 1) - Zone 4		4	UEP95	UECS1	43.68										
	2-Wire Voice Grade Loop (SL 2) - Zone 1		1	UEP95	UECS2	13.89										
	2-Wire Voice Grade Loop (SL 2) - Zone 2		2	UEP95	UECS2	18.75										
	2-Wire Voice Grade Loop (SL 2) - Zone 3		3	UEP95	UECS2	27.55										
	2-Wire Voice Grade Loop (SL 2) - Zone 4		4	UEP95	UECS2	45.72										
UNE Port Rate																
All States																
	2-Wire Voice Grade Port (Centrex) Basic Local Area			UEP95	UEPYA	1.23	40.31	19.84	24.90	6.58		15.75				
	2-Wire Voice Grade Port (Centrex 800 termination)			UEP95	UEPYB	1.23	40.31	19.84	24.90	6.58		15.75				
	2-Wire Voice Grade Port (Centrex with Caller ID)1Basic Local Area			UEP95	UEPYH	1.23	40.31	19.84	24.90	6.58		15.75				
	2-Wire Voice Grade Port (Centrex from diff Serving Wire Center)2 Basic Local Area			UEP95	UEPYM	1.23	108.35	70.57	54.24	11.70		15.75				
	2-Wire Voice Grade Port, Diff Serving Wire Center - 800 Service Term - Basic Local Area			UEP95	UEPYZ	1.23	108.35	70.57	54.24	11.70		15.75				
	2-Wire Voice Grade Port terminated in on Megalink or equivalent - Basic Local Area			UEP95	UEPY9	1.23	40.31	19.84	24.90	6.58		15.75				
	2-Wire Voice Grade Port Terminated on 800 Service Term - Basic Local Area			UEP95	UEPY2	1.23	40.31	19.84	24.90	6.58		15.75				
AL, KY, LA, MS, SC, & TN Only																
	2-Wire Voice Grade Port (Centrex)			UEP95	UEPQA	1.23	40.31	19.84	24.90	6.58		15.75				
	2-Wire Voice Grade Port (Centrex 800 termination)			UEP95	UEPQB	1.23	40.31	19.84	24.90	6.58		15.75				
	2-Wire Voice Grade Port (Centrex with Caller ID)1			UEP95	UEPQH	1.23	40.31	19.84	24.90	6.58		15.75				
	2-Wire Voice Grade Port (Centrex from diff Serving Wire Center)2			UEP95	UEPQM	1.23	108.35	70.57	54.24	11.70		15.75				
	2-Wire Voice Grade Port, Diff Serving Wire Center - 800 Service Term			UEP95	UEPQZ	1.23	108.35	70.57	54.24	11.70		15.75				
	2-Wire Voice Grade Port terminated in on Megalink or equivalent			UEP95	UEPQ9	1.23	40.31	19.84	24.90	6.58		15.75				
	2-Wire Voice Grade Port Terminated on 800 Service Term			UEP95	UEPQ2	1.23	40.31	19.84	24.90	6.58		15.75				
FL & GA Only												15.75				
Local Switching																
	Centrex Intercom Funtionality, per port			UEP95	URECS	0.7947										
Local Number Portability																
	Local Number Portability (1 per port)			UEP95	LNPCC	0.35										
Features																
	All Standard Features Offered, per port			UEP95	UEPVF	2.56						15.75				
	All Select Features Offered, per port			UEP95	UEPVS	0.00	404.98					15.75				
	All Centrex Control Features Offered, per port			UEP95	UEPVC	2.56						15.75				
NARS																
	Unbundled Network Access Register - Combination			UEP95	UARCX	0.00	0.00	0.00				15.75				
	Unbundled Network Access Register - Indial			UEP95	UAR1X	0.00	0.00	0.00				15.75				
	Unbundled Network Access Register - Outdial			UEP95	UAROX	0.00	0.00	0.00				15.75				
Miscellaneous Terminations																
2-Wire Trunk Side																
	Trunk Side Terminations, each			UEP95	CEND6	8.25	120.00	18.85	61.77	3.88		15.75				
4-Wire Digital (1.544 Megabits)																
	DS1 Circuit Terminations, each			UEP95	M1HD1	58.41	203.19	96.25	74.86	2.54		15.75				
	DS0 Channels Activated, each			UEP95	M1HDO	0.00	14.56									
Interoffice Channel Mileage - 2-Wire																
	Interoffice Channel Facilities Termination			UEP95	MIGBC	22.52	40.77	27.57	17.26	7.11		15.75				
	Interoffice Channel mileage, per mile or fraction of mile			UEP95	MIGBM	0.0098										
Feature Activations (DS0) Centrex Loops on Channelized DS1 Service																

UNBUNDLED NETWORK ELEMENTS - Mississippi													Attachment: 2		Exhibit: B	
CATEGORY	RATE ELEMENTS	Interim	Zone	BCS	USOC	RATES($)					Svc Order Submitted Elec per LSR	Svc Order Submitted Manually per LSR	Incremental Charge - Manual Svc Order vs. Electronic-1st	Incremental Charge - Manual Svc Order vs. Electronic-Add'l	Incremental Charge - Manual Svc Order vs. Electronic-Disc 1st	Incremental Charge - Manual Svc Order vs. Electronic-Disc Add'l
						Rec	Nonrecurring		Nonrecurring Disconnect		OSS Rates($)					
							First	Add'l	First	Add'l	SOMEC	SOMAN	SOMAN	SOMAN	SOMAN	SOMAN
D4 Channel Bank Feature Activations																
	Feature Activation on D-4 Channel Bank Centrex Loop Slot			UEP95	1PQWS	0.57										
	Feature Activation on D-4 Channel Bank FX line Side Loop Slot			UEP95	1PQW6	0.57										
	Feature Activation on D-4 Channel Bank FX Trunk Side Loop Slot			UEP95	1PQW7	0.57										
	Feature Activation on D-4 Channel Bank Centrex Loop Slot - Different Wire Center			UEP95	1PQWP	0.57										
	Feature Activation on D-4 Channel Bank Private Line Loop Slot			UEP95	1PQWV	0.57										
	Feature Activation on D-4 Channel Bank Tjie Line/Trunk Loop Slot			UEP95	1PQWQ	0.57										
	Feature Activation on D-4 Channel Bank WATS Loop Slot			UEP95	1PQWA	0.57										
Non-Recurring Charges (NRC) Associated with UNE-P Centrex																
	NRC Conversion Currently Combined Switch-As-Is with allowed changes, per port			UEP95	USAC2		0.10	0.10				15.75				
	Conversion of Existing Centrex Common Block, each			UEP95	USACN		37.97	16.68				15.75				
	New Centrex Standard Common Block			UEP95	M1ACS	0.00	666.32					15.75				
	New Centrex Customized Common Block			UEP95	M1ACC	0.00	666.32					15.75				
	NAR Establishment Charge, Per Occasion			UEP95	URECA	0.00	72.63					15.75				
UNE-P CENTREX - DMS100 (Valid in All States)																
2-Wire VG Loop/2-Wire Voice Grade Port (Centrex) Combo																
UNE Port/Loop Combination Rates (Non-Design)																
	2-Wire VG Loop/2-Wire Voice Grade Port (Centrex) Port Combo - Non-Design		1	UEP9D		12.22										
	2-Wire VG Loop/2-Wire Voice Grade Port (Centrex)Port Combo - Non-Design		2	UEP9D		17.13										
	2-Wire VG Loop/2-Wire Voice Grade Port (Centrex)Port Combo - Non-Design		3	UEP9D		26.26										
	2-Wire VG Loop/2-Wire Voice Grade Port (Centrex) Port Combo - Non-Design		4	UEP9D		44.91										
UNE Port/Loop Combination Rates (Design)																
	2-Wire VG Loop/2-Wire Voice Grade Port (Centrex) Port Combo - Design		1	UEP9D		15.12										
	2-Wire VG Loop/2-Wire Voice Grade Port (Centrex)Port Combo - Design		2	UEP9D		19.98										
	2-Wire VG Loop/2-Wire Voice Grade Port (Centrex)Port Combo - Design		3	UEP9D		28.78										
	2-Wire VG Loop/2-Wire Voice Grade Port (Centrex) Port Combo - Design		4	UEP9D		46.95										
UNE Loop Rate																
	2-Wire Voice Grade Loop (SL 1) - Zone 1		1	UEP9D	UECS1	10.98										
	2-Wire Voice Grade Loop (SL 1) - Zone 2		2	UEP9D	UECS1	15.91										
	2-Wire Voice Grade Loop (SL 1) - Zone 3		3	UEP9D	UECS1	25.04										
	2-Wire Voice Grade Loop (SL 1) - Zone 4		4	UEP9D	UECS1	43.68										
	2-Wire Voice Grade Loop (SL 2) - Zone 1		1	UEP9D	UECS2	13.89										
	2-Wire Voice Grade Loop (SL 2) - Zone 2		2	UEP9D	UECS2	18.75										
	2-Wire Voice Grade Loop (SL 2) - Zone 3		3	UEP9D	UECS2	27.55										
	2-Wire Voice Grade Loop (SL21) - Zone 4		4	UEP9D	UECS2	45.72										
UNE Port Rate																
ALL STATES																
	2-Wire Voice Grade Port (Centrex) Basic Local Area			UEP9D	UEPYA	1.23	40.31	19.84	24.90	6.58		15.75				
	2-Wire Voice Grade Port (Centrex 800 termination)Basic Local Area			UEP9D	UEPYB	1.23	40.31	19.84	24.90	6.58		15.75				
	2-Wire Voice Grade Port (Centrex / EBS-PSET)3Basic Local Area			UEP9D	UEPYC	1.23	40.31	19.84	24.90	6.58		15.75				
	2-Wire Voice Grade Port (Centrex / EBS-M5009)3Basic Local Area			UEP9D	UEPYD	1.23	40.31	19.84	24.90	6.58		15.75				

CATEGORY		RATE ELEMENTS	Interim	Zone	BCS	USOC	RATES($)					Svc Order Submitted Elec per LSR	Svc Order Submitted Manually per LSR	Incremental Charge - Manual Svc Order vs. Electronic- 1st	Incremental Charge - Manual Svc Order vs. Electronic- Add'l	Incremental Charge - Manual Svc Order vs. Electronic- Disc 1st	Incremental Charge - Manual Svc Order vs. Electronic- Disc Add'l
							Rec	Nonrecurring		Nonrecurring Disconnect		OSS Rates($)					
								First	Add'l	First	Add'l	SOMEC	SOMAN	SOMAN	SOMAN	SOMAN	SOMAN
		2-Wire Voice Grade Port (Centrex / EBS-M5209))3 Basic Local Area			UEP9D	UEPYE	1.23	40.31	19.84	24.90	6.58		15.75				
		2-Wire Voice Grade Port (Centrex / EBS-M5112))3 Basic Local Area			UEP9D	UEPYF	1.23	40.31	19.84	24.90	6.58		15.75				
		2-Wire Voice Grade Port (Centrex / EBS-M5312))3Basic Local Area			UEP9D	UEPYG	1.23	40.31	19.84	24.90	6.58		15.75				
		2-Wire Voice Grade Port (Centrex / EBS-M5008))3 Basic Local Area			UEP9D	UEPYT	1.23	40.31	19.84	24.90	6.58		15.75				
		2-Wire Voice Grade Port (Centrex / EBS-M5208))3 Basic Local Area			UEP9D	UEPYU	1.23	40.31	19.84	24.90	6.58		15.75				
		2-Wire Voice Grade Port (Centrex / EBS-M5216))3 Basic Local Area			UEP9D	UEPYV	1.23	40.31	19.84	24.90	6.58		15.75				
		2-Wire Voice Grade Port (Centrex / EBS-M5316))3 Basic Local Area			UEP9D	UEPY3	1.23	40.31	19.84	24.90	6.58		15.75				
		2-Wire Voice Grade Port (Centrex with Caller ID) Basic Local Area			UEP9D	UEPYH	1.23	40.31	19.84	24.90	6.58		15.75				
		2-Wire Voice Grade Port (Centrex/Caller ID/Msg Wtg Lamp Indication))3 Basic Local Area			UEP9D	UEPYW	1.23	40.31	19.84	24.90	6.58		15.75				
		2-Wire Voice Grade Port (Centrex/Msg Wtg Lamp Indication))3 Basic Local Area			UEP9D	UEPYJ	1.23	40.31	19.84	24.90	6.58		15.75				
		2-Wire Voice Grade Port (Centrex from diff Serving Wire Center) 2 Basic Local Area			UEP9D	UEPYM	1.23	108.35	70.57	54.24	11.70		15.75				
		2-Wire Voice Grade Port (Centrex/differ SWC /EBS-PSET)2, 3 Basic Local Area			UEP9D	UEPYO	1.23	108.35	70.57	54.24	11.70		15.75				
		2-Wire Voice Grade Port (Centrex/differ SWC /EBS-M5009)2, 3 Basic Local Area			UEP9D	UEPYP	1.23	108.35	70.57	54.24	11.70		15.75				
		2-Wire Voice Grade Port (Centrex/differ SWC /EBS-5209)2, 3 Basic Local Area			UEP9D	UEPYQ	1.23	108.35	70.57	54.24	11.70		15.75				
		2-Wire Voice Grade Port (Centrex/differ SWC /EBS-M5112)2, 3 Basic Local Area			UEP9D	UEPYR	1.23	108.35	70.57	54.24	11.70		15.75				
		2-Wire Voice Grade Port (Centrex/differ SWC /EBS-M5312)2, 3 Basic Local Area			UEP9D	UEPYS	1.23	108.35	70.57	54.24	11.70		15.75				
		2-Wire Voice Grade Port (Centrex/differ SWC /EBS-M5008)2, 3 Basic Local Area			UEP9D	UEPY4	1.23	108.35	70.57	54.24	11.70		15.75				
		2-Wire Voice Grade Port (Centrex/differ SWC /EBS-M5208)2, 3 Basic Local Area			UEP9D	UEPY5	1.23	108.35	70.57	54.24	11.70		15.75				
		2-Wire Voice Grade Port (Centrex/differ SWC /EBS-M5216)2, 3 Basic Local Area			UEP9D	UEPY6	1.23	108.35	70.57	54.24	11.70		15.75				
		2-Wire Voice Grade Port (Centrex/differ SWC /EBS-M5316)2, 3 Basic Local Area			UEP9D	UEPY7	1.23	108.35	70.57	54.24	11.70		15.75				
		2-Wire Voice Grade Port, Diff Serving Wire Center - 800 Service Term			UEP9D	UEPYZ	1.23	108.35	70.57	54.24	11.70		15.75				
		2-Wire Voice Grade Port terminated in on Megalink or equivalent Basic Local Area			UEP9D	UEPY9	1.23	40.31	19.84	24.90	6.58		15.75				
		2-Wire Voice Grade Port Terminated on 800 Service Term Basic Local Area			UEP9D	UEPY2	1.23	40.31	19.84	24.90	6.58		15.75				
	AL, KY, LA, MS, SC, & TN Only																
		2-Wire Voice Grade Port (Centrex)			UEP9D	UEPQA	1.23	40.31	19.84	24.90	6.58		15.75				
		2-Wire Voice Grade Port (Centrex 800 termination)			UEP9D	UEPQB	1.23	40.31	19.84	24.90	6.58		15.75				
		2-Wire Voice Grade Port (Centrex / EBS-PSET)3			UEP9D	UEPQC	1.23	40.31	19.84	24.90	6.58		15.75				
		2-Wire Voice Grade Port (Centrex / EBS-M5009)3			UEP9D	UEPQD	1.23	40.31	19.84	24.90	6.58		15.75				
		2-Wire Voice Grade Port (Centrex / EBS-M5209)3			UEP9D	UEPQE	1.23	40.31	19.84	24.90	6.58		15.75				
		2-Wire Voice Grade Port (Centrex / EBS-M5112)3			UEP9D	UEPQF	1.23	40.31	19.84	24.90	6.58		15.75				
		2-Wire Voice Grade Port (Centrex / EBS-M5312)3			UEP9D	UEPQG	1.23	40.31	19.84	24.90	6.58		15.75				
		2-Wire Voice Grade Port (Centrex / EBS-M5008)3			UEP9D	UEPQT	1.23	40.31	19.84	24.90	6.58		15.75				
		2-Wire Voice Grade Port (Centrex / EBS-M5208)3			UEP9D	UEPQU	1.23	40.31	19.84	24.90	6.58		15.75				
		2-Wire Voice Grade Port (Centrex / EBS-M5216)3			UEP9D	UEPQV	1.23	40.31	19.84	24.90	6.58		15.75				
		2-Wire Voice Grade Port (Centrex / EBS-M5316)3			UEP9D	UEPQ3	1.23	40.31	19.84	24.90	6.58		15.75				
		2-Wire Voice Grade Port (Centrex with Caller ID)			UEP9D	UEPQH	1.23	40.31	19.84	24.90	6.58		15.75				

CATEGORY	RATE ELEMENTS	Interim	Zone	BCS	USOC	RATES($) Rec	Nonrecurring First	Nonrecurring Add'l	Nonrecurring Disconnect First	Nonrecurring Disconnect Add'l	Svc Order Submitted Elec per LSR SOMEC	Svc Order Submitted Manually per LSR SOMAN	Incremental Charge - Manual Svc Order vs. Electronic-1st SOMAN	Incremental Charge - Manual Svc Order vs. Electronic-Add'l SOMAN	Incremental Charge - Manual Svc Order vs. Electronic-Disc 1st SOMAN	Incremental Charge - Manual Svc Order vs. Electronic-Disc Add'l SOMAN
											OSS Rates($)					
	2-Wire Voice Grade Port (Centrex/Caller ID/Msg Wtg Lamp Indication)3			UEP9D	UEPQW	1.23	40.31	19.84	24.90	6.58		15.75				
	2-Wire Voice Grade Port (Centrex/Msg Wtg Lamp Indication)3			UEP9D	UEPQJ	1.23	40.31	19.84	24.90	6.58		15.75				
	2-Wire Voice Grade Port (Centrex from diff Serving Wire Center) 2			UEP9D	UEPQM	1.23	108.35	70.57	54.24	11.70		15.75				
	2-Wire Voice Grade Port (Centrex/differ SWC /EBS-PSET)2, 3			UEP9D	UEPQO	1.23	108.35	70.57	54.24	11.70		15.75				
	2-Wire Voice Grade Port (Centrex/differ SWC /EBS-M5009)2, 3			UEP9D	UEPQP	1.23	108.35	70.57	54.24	11.70		15.75				
	2-Wire Voice Grade Port (Centrex/differ SWC /EBS-5209)2, 3			UEP9D	UEPQQ	1.23	108.35	70.57	54.24	11.70		15.75				
	2-Wire Voice Grade Port (Centrex/differ SWC /EBS-M5112)2, 3			UEP9D	UEPQR	1.23	108.35	70.57	54.24	11.70		15.75				
	2-Wire Voice Grade Port (Centrex/differ SWC /EBS-M5312)2, 3			UEP9D	UEPQS	1.23	108.35	70.57	54.24	11.70		15.75				
	2-Wire Voice Grade Port (Centrex/differ SWC /EBS-M5008)2, 3			UEP9D	UEPQ4	1.23	108.35	70.57	54.24	11.70		15.75				
	2-Wire Voice Grade Port (Centrex/differ SWC /EBS-M5208)2, 3			UEP9D	UEPQ5	1.23	108.35	70.57	54.24	11.70		15.75				
	2-Wire Voice Grade Port (Centrex/differ SWC /EBS-M5216)2, 3			UEP9D	UEPQ6	1.23	108.35	70.57	54.24	11.70		15.75				
	2-Wire Voice Grade Port (Centrex/differ SWC /EBS-M5316)2, 3			UEP9D	UEPQ7	1.23	108.35	70.57	54.24	11.70		15.75				
	2-Wire Voice Grade Port, Diff Serving Wire Center - 800 Service Term			UEP9D	UEPQZ	1.23	108.35	70.57	54.24	11.70		15.75				
	2-Wire Voice Grade Port terminated in on Megalink or equivalent			UEP9D	UEPQ9	1.23	40.31	19.84	24.90	6.58		15.75				
	2-Wire Voice Grade Port Terminated on 800 Service Term			UEP9D	UEPQ2	1.23	40.31	19.84	24.90	6.58		15.75				
Local Switching																
	Centrex Intercom Funtionality, per port			UEP9D	URECS	0.7947										
Local Number Portability																
	Local Number Portability (1 per port)			UEP9D	LNPCC	0.35										
Features																
	All Standard Features Offered, per port			UEP9D	UEPVF	2.56						15.75				
	All Select Features Offered, per port			UEP9D	UEPVS	0.00	404.98					15.75				
	All Centrex Control Features Offered, per port			UEP9D	UEPVC	2.56						15.75				
NARS																
	Unbundled Network Access Register - Combination			UEP9D	UARCX	0.00	0.00	0.00				15.75				
	Unbundled Network Access Register - Inward			UEP9D	UAR1X	0.00	0.00	0.00				15.75				
	Unbundled Network Access Register - Outdial			UEP9D	UAROX	0.00	0.00	0.00				15.75				
Miscellaneous Terminations																
2-Wire Trunk Side																
	Trunk Side Terminations, each			UEP9D	CEND6	8.25	120.00	18.85	61.77	3.88		15.75				
4-Wire Digital (1.544 Megabits)																
	DS1 Circuit Terminations, each			UEP9D	M1HD1	58.41	203.19	96.25	74.86	2.54		15.75				
	DS0 Channels Activiated per Channel			UEP9D	M1HDO	0.00	14.56									
Interoffice Channel Mileage - 2-Wire																
	Interoffice Channel Facilities Termination			UEP9D	MIGBC	22.52	40.77	27.57	17.26	7.11		15.75				
	Interoffice Channel mileage, per mile or fraction of mile			UEP9D	MIGBM	0.0098										
Feature Activations (DS0) Centrex Loops on Channelized DS1 Service																
D4 Channel Bank Feature Activations																
	Feature Activation on D-4 Channel Bank Centrex Loop Slot			UEP9D	1PQWS	0.57										
	Feature Activation on D-4 Channel Bank FX line Side Loop Slot			UEP9D	1PQW6	0.57										
	Feature Activation on D-4 Channel Bank FX Trunk Side Loop Slot			UEP9D	1PQW7	0.57										
	Feature Activation on D-4 Channel Bank Centrex Loop Slot - Different Wire Center			UEP9D	1PQWP	0.57										
	Feature Activation on D-4 Channel Bank Private Line Loop Slot			UEP9D	1PQWV	0.57										

CATEGORY	RATE ELEMENTS	Interim	Zone	BCS	USOC	RATES($) Rec	Nonrecurring First	Nonrecurring Add'l	Nonrecurring Disconnect First	Nonrecurring Disconnect Add'l	Svc Order Submitted Elec per LSR	Svc Order Submitted Manually per LSR	Incremental Charge - Manual Svc Order vs. Electronic-1st	Incremental Charge - Manual Svc Order vs. Electronic-Add'l	Incremental Charge - Manual Svc Order vs. Electronic-Disc 1st	Incremental Charge - Manual Svc Order vs. Electronic-Disc Add'l
											OSS Rates($)					
							First	Add'l	First	Add'l	SOMEC	SOMAN	SOMAN	SOMAN	SOMAN	SOMAN
	Feature Activation on D-4 Channel Bank Tjie Line/Trunk Loop Slot			UEP9D	1PQWQ	0.57										
	Feature Activation on D-4 Channel Bank WATS Loop Slot			UEP9D	1PQWA	0.57										
Non-Recurring Charges (NRC) Associated with UNE-P Centrex																
	NRC Conversion Currently Combined Switch-As-Is with allowed changes, per port			UEP9D	USAC2		0.10	0.10				15.75				
	Conversion of existing Centrex Common Block, each			UEP9D	USACN		37.97	16.68				15.75				
	New Centrex Standard Common Block			UEP9D	M1ACS	0.00	666.32					15.75				
	New Centrex Customized Common Block			UEP9D	M1ACC	0.00	666.32					15.75				
	NAR Establishment Charge, Per Occasion			UEP9D	URECA	0.00	72.63					15.75				
UNE-P CENTREX - EWSD (Valid in AL, FL, KY, LA, MS & TN)																
2-Wire VG Loop/2-Wire Voice Grade Port (Centrex) Combo																
UNE Port/Loop Combination Rates (Non-Design)																
	2-Wire VG Loop/2-Wire Voice Grade Port (Centrex) Port Combo - Non-Design		1	UEP9E		12.22										
	2-Wire VG Loop/2-Wire Voice Grade Port (Centrex)Port Combo - Non-Design		2	UEP9E		17.13										
	2-Wire VG Loop/2-Wire Voice Grade Port (Centrex)Port Combo - Non-Design		3	UEP9E		26.26										
	2-Wire VG Loop/2-Wire Voice Grade Port (Centrex) Port Combo - Non-Design		4	UEP9E		44.91										
UNE Port/Loop Combination Rates (Design)																
	2-Wire VG Loop/2-Wire Voice Grade Port (Centrex) Port Combo - Design		1	UEP9E		15.12										
	2-Wire VG Loop/2-Wire Voice Grade Port (Centrex)Port Combo - Design		2	UEP9E		19.98										
	2-Wire VG Loop/2-Wire Voice Grade Port (Centrex)Port Combo - Design		3	UEP9E		28.78										
	2-Wire VG Loop/2-Wire Voice Grade Port (Centrex) Port Combo - Design		4	UEP9E		46.95										
UNE Loop Rate																
	2-Wire Voice Grade Loop (SL 1) - Zone 1		1	UEP9E	UECS1	10.98										
	2-Wire Voice Grade Loop (SL 1) - Zone 2		2	UEP9E	UECS1	15.91										
	2-Wire Voice Grade Loop (SL 1) - Zone 3		3	UEP9E	UECS1	25.04										
	2-Wire Voice Grade Loop (SL 1) - Zone 4		4	UEP9E	UECS1	43.68										
	2-Wire Voice Grade Loop (SL 2) - Zone 1		1	UEP9E	UECS2	13.89										
	2-Wire Voice Grade Loop (SL 2) - Zone 2		2	UEP9E	UECS2	18.75										
	2-Wire Voice Grade Loop (SL 2) - Zone 3		3	UEP9E	UECS2	27.55										
	2-Wire Voice Grade Loop (SL21) - Zone 4		4	UEP9E	UECS2	45.72										
UNE Port Rate																
AL, FL, KY, LA, MS, & TN only																
	2-Wire Voice Grade Port (Centrex) Basic Local Area			UEP9E	UEPYA	1.23	40.31	19.84	24.90	6.58		15.75				
	2-Wire Voice Grade Port (Centrex 800 termination)Basic Local Area			UEP9E	UEPYB	1.23	40.31	19.84	24.90	6.58		15.75				
	2-Wire Voice Grade Port (Centrex with Caller ID)1Basic Local Area			UEP9E	UEPYH	1.23	40.31	19.84	24.90	6.58		15.75				
	2-Wire Voice Grade Port (Centrex from diff Serving Wire Center)2 Basic Local Area			UEP9E	UEPYM	1.23	108.35	70.57	54.24	11.70		15.75				
	2-Wire Voice Grade Port, Diff Serving Wire Center - 800 Service Term - Basic Local Area			UEP9E	UEPYZ	1.23	108.35	70.57	54.24	11.70		15.75				
	2-Wire Voice Grade Port terminated in on Megalink or equivalent - Basic Local Area			UEP9E	UEPY9	1.23	40.31	19.84	24.90	6.58		15.75				
	2-Wire Voice Grade Port Terminated on 800 Service Term - Basic Local Area			UEP9E	UEPY2	1.23	40.31	19.84	24.90	6.58		15.75				
AL, KY, LA, MS, & TN Only																
	2-Wire Voice Grade Port (Centrex)			UEP9E	UEPQA	1.23	40.31	19.84	24.90	6.58		15.75				
	2-Wire Voice Grade Port (Centrex 800 termination)			UEP9E	UEPQB	1.23	40.31	19.84	24.90	6.58		15.75				
	2-Wire Voice Grade Port (Centrex with Caller ID)1			UEP9E	UEPQH	1.23	40.31	19.84	24.90	6.58		15.75				

CATEGORY	RATE ELEMENTS	Interim	Zone	BCS	USOC	RATES($) Rec	Nonrecurring First	Nonrecurring Add'l	Nonrecurring Disconnect First	Nonrecurring Disconnect Add'l	Svc Order Submitted Elec per LSR SOMEC	Svc Order Submitted Manually per LSR SOMAN	Incremental Charge - Manual Svc Order vs. Electronic-1st SOMAN	Incremental Charge - Manual Svc Order vs. Electronic-Add'l SOMAN	Incremental Charge - Manual Svc Order vs. Electronic-Disc 1st SOMAN	Incremental Charge - Manual Svc Order vs. Electronic-Disc Add'l SOMAN
							OSS Rates($)									
	2-Wire Voice Grade Port (Centrex from diff Serving Wire Center)2			UEP9E	UEPQM	1.23	108.35	70.57	54.24	11.70		15.75				
	2-Wire Voice Grade Port, Diff Serving Wire Center - 800 Service Term			UEP9E	UEPQZ	1.23	108.35	70.57	54.24	11.70		15.75				
	2-Wire Voice Grade Port terminated in on Megalink or equivalent			UEP9E	UEPQ9	1.23	40.31	19.84	24.90	6.58		15.75				
	2-Wire Voice Grade Port Terminated on 800 Service Term			UEP9E	UEPQ2	1.23	40.31	19.84	24.90	6.58		15.75				
Local Switching																
	Centrex Intercom Funtionality, per port			UEP9E	URECS	0.7947										
Local Number Portability																
	Local Number Portability (1 per port)			UEP9E	LNPCC	0.35										
Features																
	All Standard Features Offered, per port			UEP9E	UEPVF	2.56						15.75				
	All Select Features Offered, per port			UEP9E	UEPVS	0.00	404.98					15.75				
	All Centrex Control Features Offered, per port			UEP9E	UEPVC	2.56						15.75				
NARS																
	Unbundled Network Access Register - Combination			UEP9E	UARCX	0.00	0.00	0.00				15.75				
	Unbundled Network Access Register - Indial			UEP9E	UAR1X	0.00	0.00	0.00				15.75				
	Unbundled Network Access Register - Outdial			UEP9E	UAROX	0.00	0.00	0.00				15.75				
Miscellaneous Terminations																
2-Wire Trunk Side																
	Trunk Side Terminations, each			UEP9E	CEND6	8.25	120.00	18.85	61.77	3.88		15.75				
4-Wire Digital (1.544 Megabits)																
	DS1 Circuit Terminations, each			UEP9E	M1HD1	58.41	203.19	96.25	74.86	2.54		15.75				
	DS0 Channel Activated Per Channel			UEP9E	M1HDO	0.00	14.56					15.75				
Interoffice Channel Mileage - 2-Wire																
	Interoffice Channel Facilities Termination			UEP9E	MIGBC	22.52	40.77	27.57	17.26	7.11		15.75				
	Interoffice Channel mileage, per mile or fraction of mile			UEP9E	MIGBM	0.0098										
Feature Activations (DS0) Centrex Loops on Channelized DS1 Service																
D4 Channel Bank Feature Activations																
	Feature Activation on D-4 Channel Bank Centrex Loop Slot			UEP9E	1PQWS	0.57						15.75				
	Feature Activation on D-4 Channel Bank FX line Side Loop Slot			UEP9E	1PQW6	0.57						15.75				
	Feature Activation on D-4 Channel Bank FX Trunk Side Loop Slot			UEP9E	1PQW7	0.57						15.75				
	Feature Activation on D-4 Channel Bank Centrex Loop Slot - Different Wire Center			UEP9E	1PQWP	0.57						15.75				
	Feature Activation on D-4 Channel Bank Private Line Loop Slot			UEP9E	1PQWV	0.57						15.75				
	Feature Activation on D-4 Channel Bank Tjie Line/Trunk Loop Slot			UEP9E	1PQWQ	0.57						15.75				
	Feature Activation on D-4 Channel Bank WATS Loop Slot			UEP9E	1PQWA	0.57						15.75				
Non-Recurring Charges (NRC) Associated with UNE-P Centrex																
	NRC Conversion Currently Combined Switch-As-Is with allowed changes, per port			UEP9E	USAC2		0.10	0.10				15.75				
	Conversion of Existing Centrex Common Block, each			UEP9E	USACN		37.97	16.68				15.75				
	New Centrex Standard Common Block			UEP9E	M1ACS	0.00	666.32					15.75				
	New Centrex Customized Common Block			UEP9E	M1ACC	0.00	666.32					15.75				
	NAR Establishment Charge, Per Occasion			UEP9E	URECA	0.00	72.63					15.75				
UNE-P CENTREX - DCO - Valid in AL, KY, LA, MS, & TN)																
2-Wire VG Loop/2-Wire Voice Grade Port (Centrex) Combo																
UNE Port/Loop Combination Rates (Non-Design)																
	2-Wire VG Loop/2-Wire Voice Grade Port (Centrex) Port Combo - Non-Design		1	UEP93		12.22										
	2-Wire VG Loop/2-Wire Voice Grade Port (Centrex)Port Combo - Non-Design		2	UEP93		17.13										
	2-Wire VG Loop/2-Wire Voice Grade Port (Centrex)Port Combo - Non-Design		3	UEP93		26.26										

CATEGORY	RATE ELEMENTS	Interim	Zone	BCS	USOC	RATES($) Rec	Nonrecurring First	Nonrecurring Add'l	Nonrecurring Disconnect First	Nonrecurring Disconnect Add'l	Svc Order Submitted Elec per LSR	Svc Order Submitted Manually per LSR	Incremental Charge - Manual Svc Order vs. Electronic- 1st	Incremental Charge - Manual Svc Order vs. Electronic- Add'l	Incremental Charge - Manual Svc Order vs. Electronic- Disc 1st	Incremental Charge - Manual Svc Order vs. Electronic- Disc Add'l
											OSS Rates($)					
											SOMEC	SOMAN	SOMAN	SOMAN	SOMAN	SOMAN
	2-Wire VG Loop/2-Wire Voice Grade Port (Centrex) Port Combo - Non-Design		4	UEP93		44.91										
	UNE Port/Loop Combination Rates (Design)															
	2-Wire VG Loop/2-Wire Voice Grade Port (Centrex) Port Combo - Design		1	UEP93		15.12										
	2-Wire VG Loop/2-Wire Voice Grade Port (Centrex)Port Combo - Design		2	UEP93		19.98										
	2-Wire VG Loop/2-Wire Voice Grade Port (Centrex)Port Combo - Design		3	UEP93		28.78										
	2-Wire VG Loop/2-Wire Voice Grade Port (Centrex) Port Combo - Design		4	UEP93		46.95										
	UNE Loop Rate															
	2-Wire Voice Grade Loop (SL 1) - Zone 1		1	UEP93	UECS1	10.98										
	2-Wire Voice Grade Loop (SL 1) - Zone 2		2	UEP93	UECS1	15.91										
	2-Wire Voice Grade Loop (SL 1) - Zone 3		3	UEP93	UECS1	25.04										
	2-Wire Voice Grade Loop (SL 1) - Zone 4		4	UEP93	UECS1	43.68										
	2-Wire Voice Grade Loop (SL 2) - Zone 1		1	UEP93	UECS2	13.89										
	2-Wire Voice Grade Loop (SL 2) - Zone 2		2	UEP93	UECS2	18.75										
	2-Wire Voice Grade Loop (SL 2) - Zone 3		3	UEP93	UECS2	27.55										
	2-Wire Voice Grade Loop (SL21) - Zone 4		4	UEP93	UECS2	45.72										
	UNE Port Rate															
	AL, KY, LA, MS, & TN only															
	2-Wire Voice Grade Port (Centrex) Basic Local Area			UEP93	UEPYA	1.23	40.31	19.84	24.90	6.58		15.75				
	2-Wire Voice Grade Port (Centrex 800 termination)Basic Local Area			UEP93	UEPYB	1.23	40.31	19.84	24.90	6.58		15.75				
	2-Wire Voice Grade Port (Centrex with Caller ID)1Basic Local Area			UEP93	UEPYH	1.23	40.31	19.84	24.90	6.58		15.75				
	2-Wire Voice Grade Port (Centrex from diff Serving Wire Center)2 Basic Local Area			UEP93	UEPYM	1.23	108.35	70.57	54.24	11.70		15.75				
	2-Wire Voice Grade Port, Diff Serving Wire Center - 800 Service Term - Basic Local Area			UEP93	UEPYZ	1.23	108.35	70.57	54.24	11.70		15.75				
	2-Wire Voice Grade Port terminated in on Megalink or equivalent - Basic Local Area			UEP93	UEPY9	1.23	40.31	19.84	24.90	6.58		15.75				
	2-Wire Voice Grade Port Terminated on 800 Service Term - Basic Local Area			UEP93	UEPY2	1.23	40.31	19.84	24.90	6.58		15.75				
	2-Wire Voice Grade Port (Centrex)			UEP93	UEPQA	1.23	40.31	19.84	24.90	6.58		15.75				
	2-Wire Voice Grade Port (Centrex 800 termination)			UEP93	UEPQB	1.23	40.31	19.84	24.90	6.58		15.75				
	2-Wire Voice Grade Port (Centrex with Caller ID)1			UEP93	UEPQH	1.23	40.31	19.84	24.90	6.58		15.75				
	2-Wire Voice Grade Port (Centrex from diff Serving Wire Center)2			UEP93	UEPQM	1.23	108.35	70.57	54.24	11.70		15.75				
	2-Wire Voice Grade Port, Diff Serving Wire Center - 800 Service Term			UEP93	UEPQZ	1.23	108.35	70.57	54.24	11.70		15.75				
	2-Wire Voice Grade Port terminated in on Megalink or equivalent			UEP93	UEPQ9	1.23	40.31	19.84	24.90	6.58		15.75				
	2-Wire Voice Grade Port Terminated on 800 Service Term			UEP93	UEPQ2	1.23	40.31	19.84	24.90	6.58		15.75				
	Local Switching															
	Centrex Intercom Funtionality, per port			UEP93	URECS	0.7947										
	Local Number Portability															
	Local Number Portability (1 per port)			UEP93	LNCCC	0.35										
	Features															
	All Standard Features Offered, per port			UEP93	UEPVF	2.56						15.75				
	All Centrex Control Features Offered, per port			UEP93	UEPVC	2.56						15.75				
	NARS															
	Unbundled Network Access Register - Combination			UEP93	UARCX	0.00	0.00	0.00				15.75				
	Unbundled Network Access Register - Indial			UEP93	UAR1X	0.00	0.00	0.00				15.75				
	Unbundled Network Access Register - Outdial			UEP93	UAROX	0.00	0.00	0.00				15.75				
	Miscellaneous Terminations															
	2-Wire Trunk Side															
	Trunk Side Terminations, each			UEP93	CEND6	8.25	120.00	18.85	61.77	3.88		15.75				

UNBUNDLED NETWORK ELEMENTS - Mississippi														Attachment: 2		Exhibit: B	
CATEGORY	RATE ELEMENTS	Interim	Zone	BCS	USOC	RATES($)					Svc Order Submitted Elec per LSR	Svc Order Submitted Manually per LSR	Incremental Charge - Manual Svc Order vs. Electronic-1st	Incremental Charge - Manual Svc Order vs. Electronic-Add'l	Incremental Charge - Manual Svc Order vs. Electronic-Disc 1st	Incremental Charge - Manual Svc Order vs. Electronic-Disc Add'l
						Rec	Nonrecurring		Nonrecurring Disconnect		OSS Rates($)					
							First	Add'l	First	Add'l	SOMEC	SOMAN	SOMAN	SOMAN	SOMAN	SOMAN
4-Wire Digital (1.544 Megabits)																
	DS1 Circuit Terminations, each			UEP93	M1HD1	58.41	203.19	96.25	74.86	2.54		15.75				
	DS0 Channels Activated, Per Channel			UEP93	M1HDO	0.00	14.56					15.75				
Interoffice Channel Mileage - 2-Wire																
	Interoffice Channel Facilities Termination			UEP93	MIGBC	22.52	40.77	27.57	17.26	7.11		15.75				
	Interoffice Channel mileage, per mile or fraction of mile			UEP93	MIGBM	0.0098										
Feature Activations (DS0) Centrex Loops on Channelized DS1 Service																
D4 Channel Bank Feature Activations																
	Feature Activation on D-4 Channel Bank Centrex Loop Slot			UEP93	1PQWS	0.57										
	Feature Activation on D-4 Channel Bank FX Line Side Loop Slot			UEP93	1PQW6	0.57										
	Feature Activation on D-4 Channel Bank FX Trunk Side Loop Slot			UEP93	1PQW7	0.57										
	Feature Activation on D-4 Channel Bank Centrex Loop Slot - Different Wire Center			UEP93	1PQWP	0.57										
	Feature Activation on D-4 Channel Bank Private Line Loop Slot			UEP93	1PQWV	0.57										
	Feature Activation on D-4 Channel Bank Tie Line/Trunk Loop Slot			UEP93	1PQWQ	0.57										
	Feature Activation on D-4 Channel Bank WATS Loop Slot			UEP93	1PQWA	0.57										
Non-Recurring Charges (NRC) Associated with UNE-P Centrex																
	NRC Conversion Currently Combined Switch-As-Is with allowed changes, per port			UEP93	USAC2		0.10	0.10				15.75				
	Conversion of Existing Centrex Common Block, each			UEP93	USACN		37.97	16.68								
	New Centrex Standard Common Block			UEP93	M1ACS	0.00	666.32					15.75				
	New Centrex Customized Common Block			UEP93	M1ACC	0.00	666.32					15.75				
	NAR Establishment Charge, Per Occasion			UEP93	URECA	0.00	72.63					15.75				
Note 1 - Required Port for Centrex Control in 1AESS, 5ESS & EWSD																
Note 2 - Requres Interoffice Channel Mileage																
Note 3 - Requires Specific Customer Premises Equipment																
NOTE: Rates displaying an "R" in Interim column are interim and subject to rate true-up as set forth in General Terms and Conditions.																

CATEGORY	RATE ELEMENTS	Interim	Zone	BCS	USOC	RATES($) Rec	Nonrecurring First	Nonrecurring Add'l	Nonrecurring Disconnect First	Nonrecurring Disconnect Add'l	Svc Order Submitted Elec per LSR	Svc Order Submitted Manually per LSR	Incremental Charge - Manual Svc Order vs. Electronic-1st	Incremental Charge - Manual Svc Order vs. Electronic-Add'l	Incremental Charge - Manual Svc Order vs. Electronic-Disc 1st	Incremental Charge - Manual Svc Order vs. Electronic-Disc Add'l
											OSS Rates($)					
											SOMEC	SOMAN	SOMAN	SOMAN	SOMAN	SOMAN
OPERATIONAL SUPPORT SYSTEMS																
	NOTE: (1) Electronic Service Order: CLEC should contact its contract negotiator if it prefers the state specific electronic service ordering charges as ordered by the State Commissions. The electronic service ordering charge currently contained in this rate exhibit is the BellSouth regional electronic service ordering charge. CLEC may elect either the state specific Commission ordered rates for the electronic service ordering charges, or CLEC may elect the regional electronic service ordering charge.															
	NOTE: (2) Any element that can be ordered electronically will be billed according to the SOMEC rate listed in this category. Please refer to BellSouth's Business Rules for Local Ordering (BBR-LO) to determine if a product can be ordered electronically. For those elements that cannot be ordered electronically at present per the BBR-LO, the listed SOMEC rate in this category reflects the charge that would be billed to a CLEC once electronic ordering capabilities come on-line for that element. Otherwise, the manual ordering charge, SOMAN, will be applied to a CLECs bill when it submits an LSR to BellSouth.															
	Electronic OSS Charge, per LSR, submitted via BST's OSS interactive interfaces (Regional)				SOMEC		3.50									
UNBUNDLED EXCHANGE ACCESS LOOP																
2-WIRE ANALOG VOICE GRADE LOOP																
	2-Wire Analog Voice Grade Loop - Service Level 1- Statewide		sw	UEANL	UEAL2	15.88	57.99	42.37					26.94	12.76		
	Loop Testing - Basic 1st Half Hour			UEANL	URET1		78.92	78.92					26.94	12.76		
	Loop Testing - Basic Additional Half Hour			UEANL	URETA		23.33	23.33					26.94	12.76		
	CLEC to CLEC Conversion Charge Without Outside Dispatch (UVL-SL1)			UEANL	UREWO		15.76	8.93					26.94	12.76		
	Engineering Information Document (EI)			UEANL			28.74	28.74								
	Manual Order Coordination for UVL-SL1s (per loop)			UEANL	UEAMC		61.38	61.38								
	Order Coordination for Specified Conversion Time for UVL-SL1 (per LSR)			UEANL	OCOSL		45.34	45.34								
2-WIRE Unbundled COPPER LOOP																
	2-Wire Unbundled Copper Loop Non-Designed - SW	I	sw	UEQ	UEQ2X	15.88	57.99	42.37					26.94	26.94		
	Order Coordination 2 Wire Unbundled Copper Loop - Non-Designed (per loop)			UEQ	USBMC		61.38	61.38					26.94	12.76		
	Engineering Information Document			UEQ			28.74	28.74					26.94	12.76		
	Loop Testing - Basic 1st Half Hour			UEQ	URET1		78.92	78.92					26.94	12.76		
	Loop Testing - Basic Additional Half Hour			UEQ	URETA		23.33	23.33					26.94	12.76		
	CLEC to CLEC Conversion Charge Without Outside Dispatch (UCL-ND)			UEQ	UREWO		14.26	7.42					26.94	12.76		
UNBUNDLED EXCHANGE ACCESS LOOP																
2-WIRE ANALOG VOICE GRADE LOOP																
	2 Wire Analog Voice Grade Loop -Service Level 1-Statewide-Line Splitting			UEPSR UEPSB	UEALS	15.88	57.99	42.37					26.94	12.76		
	2 Wire Analog Voice Grade Loop -Service Level 1-Statewide-Line Splitting			UEPSR UEPSB	UEABS	15.88	57.99	42.37					26.94	12.76		
UNE Loop Rates for Line Splitting																
	2-Wire Voice Grade Loop (SL1) for Line Splitting- Statewide		sw	UEPRX	UEPLX	14.18										
UNBUNDLED EXCHANGE ACCESS LOOP																
2-WIRE ANALOG VOICE GRADE LOOP																
	2-Wire Analog Voice Grade Loop - Service Level 2 w/Loop or Ground Start Signaling - Statewide		sw	UEA	UEAL2	19.50	142.97	106.56					26.94	12.76		
	Order Coordination for Specified Conversion Time (per LSR)			UEA	OCOSL		45.34									
	2-Wire Analog Voice Grade Loop - Service Level 2 w/Reverse Battery Signaling-Statewide		sw	UEA	UEAR2	19.50	142.97	106.56					26.94	12.76		
	Order Coordination for Specified Conversion Time (per LSR)			UEA	OCOSL		45.34									
	CLEC to CLEC Conversion Charge without outside dispatch			UEA	UREWO		87.64	36.33					26.94	12.76		
4-WIRE ANALOG VOICE GRADE LOOP																
	4-Wire Analog Voice Grade Loop - Statewide		sw	UEA	UEAL4	27.49	288.47	237.45					26.94	12.76		
	Order Coordination for Specified Conversion Time (per LSR)			UEA	OCOSL		45.34									
	CLEC to CLEC Conversion Charge without outside dispatch			UEA	UREWO		87.64	36.33					26.94	12.76		
2-WIRE ISDN DIGITAL GRADE LOOP																
	2-Wire ISDN Digital Grade Loop - Statewide		sw	UDN	U1L2X	24.98	325.91	251.31					26.94	12.76		
	Order Coordination For Specified Conversion Time (per LSR)			UDN	OCOSL		45.34									
	CLEC to CLEC Conversion Charge without outside dispatch			UDN	UREWO		91.55	44.12					26.94	12.76		
2-WIRE Universal Digital Channel (UDC) COMPATIBLE LOOP																
	2-Wire Universal Digital Channel (UDC) Compatible Loop - Statewide		sw	UDC	UDC2X	24.98	325.91	251.31					26.94	12.76		
	CLEC to CLEC Conversion Charge without outside dispatch			UDC	UREWO		91.55	44.12					26.94	12.76		
2-WIRE ASYMMETRICAL DIGITAL SUBSCRIBER LINE (ADSL) COMPATIBLE LOOP																

UNBUNDLED NETWORK ELEMENTS - North Carolina														Attachment: 2		Exhibit: B	
CATEGORY		RATE ELEMENTS	Interim	Zone	BCS	USOC	RATES($)					Svc Order Submitted Elec per LSR	Svc Order Submitted Manually per LSR	Incremental Charge - Manual Svc Order vs. Electronic-1st	Incremental Charge - Manual Svc Order vs. Electronic-Add'l	Incremental Charge - Manual Svc Order vs. Electronic-Disc 1st	Incremental Charge - Manual Svc Order vs. Electronic-Disc Add'l
							Rec	Nonrecurring		Nonrecurring Disconnect		OSS Rates($)					
								First	Add'l	First	Add'l	SOMEC	SOMAN	SOMAN	SOMAN	SOMAN	SOMAN
		2 Wire Unbundled ADSL Loop including manual service inquiry & facility reservation - Statewide		sw	UAL	UAL2X	14.60	504.90	456.17					26.94	12.76		
		Order Coordination for Specified Conversion Time (per LSR)			UAL	OCOSL		45.34									
		2 Wire Unbundled ADSL Loop without manual service inquiry and facility reservaton - Statewide		sw	UAL	UAL2W	14.60	203.85	128.42					26.94	12.76		
		Order Coordination for Specified Conversion Time (per LSR)			UAL	OCOSL		45.34									
		CLEC to CLEC Conversion Charge without outside dispatch			UAL	UREWO		86.12	40.36					26.94	12.76		
	2-WIRE HIGH BIT RATE DIGITAL SUBSCRIBER LINE (HDSL) COMPATIBLE LOOP																
		2 Wire Unbundled HDSL Loop including manual service inquiry and facility reservation - Statewide		sw	UHL	UHL2X	11.98	504.90	456.17					26.94	12.76		
		Order Coordination for Specified Conversion Time (per LSR)			UHL	OCOSL		45.34									
		2 Wire Unbundled HDSL Loop without manual service inquiry and facility reservation - Statewide		sw	UHL	UHL2W	11.98	221.08	145.65					26.94	12.76		
		Order Coordination for Specified Conversion Time (per LSR)			UHL	OCOSL		45.34									
		CLEC to CLEC Conversion Charge without outside dispatch			UHL	UREWO		86.06	40.36					26.94	12.76		
	4-WIRE HIGH BIT RATE DIGITAL SUBSCRIBER LINE (HDSL) COMPATIBLE LOOP																
		4 Wire Unbundled HDSL Loop including manual service inquiry and facility reservation - Statewide		sw	UHL	UHL4X	13.97	531.35	482.62					26.94	12.76		
		Order Coordination for Specified Conversion Time (per LSR)			UHL	OCOSL		45.34									
		4-Wire Unbundled HDSL Loop without manual service inquiry and facility reservation - Statewide		sw	UHL	UHL4W	13.97	277.99	202.56					26.94	12.76		
		Order Coordination for Specified Conversion Time (per LSR)			UHL	OCOSL		45.34									
		CLEC to CLEC Conversion Charge without outside dispatch			UHL	UREWO		86.06	40.36					26.94	12.76		
	4-WIRE DS1 DIGITAL LOOP																
		4-Wire DS1 Digital Loop - Statewide		sw	USL	USLXX	62.78	714.84	421.47					42.19	12.76		
		Order Coordination for Specified Conversion Time (per LSR)			USL	OCOSL		45.34									
		CLEC to CLEC Conversion Charge without outside dispatch			USL	UREWO		100.99	43.00					26.94	12.76		
	4-WIRE 19.2, 56 OR 64 KBPS DIGITAL GRADE LOOP																
		4 Wire Unbundled Digital 19.2 Kbps		sw	UDL	UDL19	32.67	489.04	337.51					19.99	19.99	19.99	19.99
		4 Wire Unbundled Digital Loop 56 Kbps		sw	UDL	UDL56	32.67	489.04	337.51					26.94	12.76		
		Order Coordination for Specified Conversion Time (per LSR)			UDL	OCOSL		45.34									
		4 Wire Unbundled Digital Loop 64 Kbps - Statewide		sw	UDL	UDL64	32.67	489.04	337.51					26.94	12.76		
		Order Coordination for Specified Conversion Time (per LSR)			UDL	OCOSL		45.34									
		CLEC to CLEC Conversion Charge without outside dispatch			UDL	UREWO		102.03	49.70					26.94	12.76		
	2-WIRE Unbundled COPPER LOOP																
		2-Wire Unbundled Copper Loop/Short including manual service inquiry & facility reservation - Zone 1		1	UCL	UCLPB	13.40	281.95	162.85					19.99	19.99	19.99	19.99
		2-Wire Unbundled Copper Loop/Short including manual service inquiry & facility reservation - Zone 2		2	UCL	UCLPB	21.76	281.95	162.85					19.99	19.99	19.99	19.99
		2 Wire Unbundled Copper Loop/Short including manual service inquiry & facility reservation - Zone 3		3	UCL	UCLPB	25.01	281.95	162.85					19.99	19.99	19.99	19.99
		Order Coordination for Unbundled Copper Loops (per loop)			UCL	UCLMC		61.38	61.38								
		2-Wire Unbundled Copper Loop/Short without manual service inquiry and facility reservation - Zone 1		1	UCL	UCLPW	13.40	250.17	174.74					19.99	19.99	19.99	19.99
		2-Wire Unbundled Copper Loop/Short without manual service inquiry and facility reservation - Zone 2		2	UCL	UCLPW	21.76	250.17	174.74					19.99	19.99	19.99	19.99
		2-Wire Unbundled Copper Loop/Short without manual service inquiry and facility reservation - Zone 3		3	UCL	UCLPW	25.01	250.17	174.74					19.99	19.99	19.99	19.99
		Order Coordination for Unbundled Copper Loops (per loop)			UCL	UCLMC		61.38	61.38								
		2-Wire Unbundled Copper Loop/Long - includes manual srvc. inquiry and facility reservation - Zone 1		1	UCL	UCL2L	37.79	268.96	149.86					19.99	19.99	19.99	19.99
		2-Wire Unbundled Copper Loop/Long - includes manual svc. inquiry and facility reservation - Zone 2		2	UCL	UCL2L	63.16	268.96	149.86					19.99	19.99	19.99	19.99
		2-Wire Unbundled Copper Loop/Long - includes manual svc. inquiry and facility reservation - Zone 3		3	UCL	UCL2L	73.02	268.96	149.86					19.99	19.99	19.99	19.99
		Order Coordination for Unbundled Copper Loops (per loop)			UCL	UCLMC		61.38	61.38								
		2-Wire Unbundled Copper Loop/Long - without manual service inquiry and facility reservation - Zone 1		1	UCL	UCL2W	37.79	189.00	113.57					19.99	19.99	19.99	19.99

UNBUNDLED NETWORK ELEMENTS - North Carolina														Attachment: 2		Exhibit: B	
CATEGORY		RATE ELEMENTS	Interim	Zone	BCS	USOC	RATES($)					Svc Order Submitted Elec per LSR	Svc Order Submitted Manually per LSR	Incremental Charge - Manual Svc Order vs. Electronic-1st	Incremental Charge - Manual Svc Order vs. Electronic-Add'l	Incremental Charge - Manual Svc Order vs. Electronic-Disc 1st	Incremental Charge - Manual Svc Order vs. Electronic-Disc Add'l
							Rec	Nonrecurring		Nonrecurring Disconnect		OSS Rates($)					
								First	Add'l	First	Add'l	SOMEC	SOMAN	SOMAN	SOMAN	SOMAN	SOMAN
		2-Wire Unbundled Copper Loop/Long - without manual service inquiry and facility reservation - Zone 2		2	UCL	UCL2W	63.16	189.00	113.57					19.99	19.99	19.99	19.99
		2-Wire Unbundled Copper Loop/Long - without manual service inquiry and facility reservation - Zone 3		3	UCL	UCL2W	73.02	189.00	113.57					19.99	19.99	19.99	19.99
		Order Coordination for Unbundled Copper Loops (per loop)			UCL	UCLMC		61.38	61.38								
		CLEC to CLEC Conversion Charge without outside dispatch (UCL-Des)			UCL	UREWO		97.14	42.44					19.99	19.99	19.99	19.99
	4-WIRE COPPER LOOP																
		4-Wire Copper Loop/Short - including manual service inquiry and facility reservation - Zone 1		1	UCL	UCL4S	17.63	330.13	211.02					19.99	19.99	19.99	19.99
		4-Wire Copper Loop/Short - including manual service inquiry and facility reservation - Zone 2		2	UCL	UCL4S	28.89	330.13	211.02					19.99	19.99	19.99	19.99
		4-Wire Copper Loop/Short - including manual service inquiry and facility reservation - Zone 3		3	UCL	UCL4S	33.28	330.13	211.02					19.99	19.99	19.99	19.99
		Order Coordination for Unbundled Copper Loops (per loop)			UCL	UCLMC		61.38	61.38								
		4-Wire Copper Loop/Short - without manual service inquiry and facility reservation - Zone 1		1	UCL	UCL4W	17.63	250.17	174.74					19.99	19.99	19.99	19.99
		4-Wire Copper Loop/Short - without manual service inquiry and facility reservation - Zone 2		2	UCL	UCL4W	28.89	250.17	174.74					19.99	19.99	19.99	19.99
		4-Wire Copper Loop/Short - without manual service inquiry and facility reservation - Zone 3		3	UCL	UCL4W	33.28	250.17	174.74					19.99	19.99	19.99	19.99
		Order Coordination for Unbundled Copper Loops (per loop)			UCL	UCLMC		61.38	61.38								
		4-Wire Unbundled Copper Loop/Long - includes manual svc. inquiry and facility reservation - Zone 1		1	UCL	UCL4L	53.68	317.14	198.03					19.99	19.99	19.99	19.99
		4-Wire Unbundled Copper Loop/Long - includes manual svc. inquiry and facility reservation - Zone 2		2	UCL	UCL4L	90.07	317.14	198.03					19.99	19.99	19.99	19.99
		4-Wire Unbundled Copper Loop/Long - includes manual svc. inquiry and facility reservation - Zone 3		3	UCL	UCL4L	104.23	317.14	198.03					19.99	19.99	19.99	19.99
		Order Coordination for Unbundled Copper Loops (per loop)			UCL	UCLMC		61.38	61.38								
		4-Wire Unbundled Copper Loop/Long - without manual svc. inquiry and facility reservation - Zone 1		1	UCL	UCL4O	53.68	237.18	161.75					19.99	19.99	19.99	19.99
		4-Wire Unbundled Copper Loop/Long - without manual svc. inquiry and facility reservation - Zone 2		2	UCL	UCL4O	90.07	237.18	161.75					19.99	19.99	19.99	19.99
		4-Wire Unbundled Copper Loop/Long - without manual svc. inquiry and facility reservation - Zone 3		3	UCL	UCL4O	104.23	237.18	161.75					19.99	19.99	19.99	19.99
		Order Coordination for Unbundled Copper Loops (per loop)			UCL	UCLMC		61.38	61.38								
		CLEC to CLEC Conversion Charge without outside dispatch (UCL-Des)			UCL	UREWO		97.14	42.44					19.99	19.99	19.99	19.99
LOOP MODIFICATION																	
		Unbundled Loop Modification, Removal of Load Coils - 2 Wire pair less than or equal to 18k ft			UAL, UHL, UCL, UEQ, ULS, UEA, UEANL, UDL, UDC, UDN, UDL, USL	ULM2L		64.85	64.85					26.94	12.76		
		Unbundled Loop Modification, Removal of Load Coils - 2 wire greater than 18k ft			UCL, ULS	ULM2G		339.84	339.84					26.94	12.76		
		Unbundled Loop Modification Removal of Load Coils - 4 Wire less than or equal to 18K ft			UHL, UCL	ULM4L		64.85	64.85					26.94	12.76		
		Unbundled Loop Modification Removal of Load Coils - 4 Wire pair greater than 18k ft			UCL	ULM4G		339.84	339.84					26.94	12.76		
		Unbundled Loop Modification Removal of Bridged Tap Removal, per unbundled loop			UAL, UHL, UCL, UEQ, UEF, ULS, UEA, UEANL, UDL, UDC, UDN, UDL, USL	ULMBT		64.90	64.90					26.94	12.76		
SUB-LOOPS																	
	Sub-Loop Distribution																
		Sub-Loop - Per Cross Box Location - CLEC Feeder Facility Set-Up	I		UEANL	USBSA		498.09	498.09					26.94	12.76	15.12	15.12

UNBUNDLED NETWORK ELEMENTS - North Carolina														Attachment: 2		Exhibit: B	
CATEGORY		RATE ELEMENTS	Interim	Zone	BCS	USOC	RATES($)					Svc Order Submitted Elec per LSR	Svc Order Submitted Manually per LSR	Incremental Charge - Manual Svc Order vs. Electronic-1st	Incremental Charge - Manual Svc Order vs. Electronic-Add'l	Incremental Charge - Manual Svc Order vs. Electronic-Disc 1st	Incremental Charge - Manual Svc Order vs. Electronic-Disc Add'l
							Rec	Nonrecurring		Nonrecurring Disconnect		OSS Rates($)					
								First	Add'l	First	Add'l	SOMEC	SOMAN	SOMAN	SOMAN	SOMAN	SOMAN
		Sub-Loop - Per Cross Box Location - Per 25 Pair Panel Set-Up	I		UEANL	USBSB		45.04	45.04					26.94	12.76	15.12	15.12
		Sub-Loop - Per Building Equipment Room - CLEC Feeder Facility Set-Up	I		UEANL	USBSC		313.01	313.01					26.94	12.76	15.12	15.12
		Sub-Loop - Per Building Equipment Room - Per 25 Pair Panel Set-Up	I		UEANL	USBSD		108.06	108.06					26.94	12.76	15.12	15.12
		Sub-Loop Distribution Per 2-Wire Analog Voice Grade Loop - Zone 1	I	1	UEANL	USBN2	7.99	126.03	54.54	71.13	10.16			26.94	12.76	15.12	15.12
		Sub-Loop Distribution Per 2-Wire Analog Voice Grade Loop - Zone 2	I	2	UEANL	USBN2	12.63	126.03	54.54	71.13	10.16			26.94	12.76	15.12	15.12
		Sub-Loop Distribution Per 2-Wire Analog Voice Grade Loop - Zone 3	I	3	UEANL	USBN2	14.43	126.03	54.54	71.13	10.16			26.94	12.76	15.12	15.12
		Order Coordination for Unbundled Sub-Loops, per sub-loop pair			UEANL	USBMC		45.34	45.34								
		Sub-Loop Distribution Per 4-Wire Analog Voice Grade Loop - Zone 1		1	UEANL	USBN4	9.23	156.52	79.66	78.56	13.53			26.94	12.76	15.12	15.12
		Sub-Loop Distribution Per 4-Wire Analog Voice Grade Loop - Zone 2		2	UEANL	USBN4	14.63	156.52	79.66	78.56	13.53			26.94	12.76	15.12	15.12
		Sub-Loop Distribution Per 4-Wire Analog Voice Grade Loop - Zone 3		3	UEANL	USBN4	16.73	156.52	79.66	78.56	13.53			26.94	12.76	15.12	15.12
		Order Coordination for Unbundled Sub-Loops, per sub-loop pair			UEANL	USBMC		45.34	45.34								
		Sub-Loop 2-Wire Intrabuilding Network Cable (INC)	I		UEANL	USBR2	3.50	114.05	37.20	76.58	10.81			26.94	12.76	15.12	15.12
		Order Coordination for Unbundled Sub-Loops, per sub-loop pair			UEANL	USBMC		45.34	45.34								
		Sub-Loop 4-Wire Intrabuilding Network Cable (INC)	I		UEANL	USBR4	3.75	127.67	50.82	78.71	10.69			26.94	12.76	15.12	15.12
		Order Coordination for Unbundled Sub-Loops, per sub-loop pair			UEANL	USBMC		45.34	45.34								
		2 Wire Copper Unbundled Sub-Loop Distribution - Zone 1	I	1	UEF	UCS2X	7.33	137.10	60.24	76.58	10.81			26.94	12.76	15.12	15.12
		2 Wire Copper Unbundled Sub-Loop Distribution - Zone 2	I	2	UEF	UCS2X	10.95	137.10	60.24	76.58	10.81			26.94	12.76	15.12	15.12
		2 Wire Copper Unbundled Sub-Loop Distribution - Zone 3	I	3	UEF	UCS2X	12.36	137.10	60.24	76.58	10.81			26.94	12.76	15.12	15.12
		Order Coordination for Unbundled Sub-Loops, per sub-loop pair			UEF	USBMC		45.34	45.34								
		4 Wire Copper Unbundled Sub-Loop Distribution - Zone 1	I	1	UEF	UCS4X	7.14	162.24	85.38	78.56	13.53			26.94	12.76	15.12	15.12
		4 Wire Copper Unbundled Sub-Loop Distribution - Zone 2	I	2	UEF	UCS4X	11.09	162.24	85.38	78.56	13.53			26.94	12.76	15.12	15.12
		4 Wire Copper Unbundled Sub-Loop Distribution - Zone 3	I	3	UEF	UCS4X	12.63	162.24	85.38	78.56	13.53			26.94	12.76	15.12	15.12
		Order Coordination for Unbundled Sub-Loops, per sub-loop pair			UEF	USBMC		45.34	45.34								
	Unbundled Sub-Loop Modification																
		Unbundled Sub-Loop Modification - 2-W Copper Dist Load Coil/Equip Removal per 2-W PR			UEF	ULM2X		353.95	12.20					26.94	12.76	15.12	15.12
		Unbundled Sub-loop Modification - 4-W Copper Dist Load Coil/Equip Removal per 4-W PR			UEF	ULM4X		353.95	12.20					26.94	12.76	15.12	15.12
		Unbundled Sub-loop Modification - 2-w/4-w Copper Dist Bridged Tap Removal, per PR unloaded			UEF	ULM4T		557.78	14.23					26.94	12.76	15.12	15.12
	Unbundled Network Terminating Wire (UNTW)																
		Unbundled Network Terminating Wire (UNTW) per Pair			UENTW	UENPP	0.44	64.98	64.98					26.94	12.76	15.12	15.12
	Network Interface Device (NID)																
		Network Interface Device (NID) - 1-2 lines	I		UENTW	UND12		86.37	56.69					26.94	12.76	15.12	15.12
		Network Interface Device (NID) - 1-6 lines	I		UENTW	UND16		127.93	98.21					26.94	12.76	15.12	15.12
		Network Interface Device Cross Connect - 2 W	I		UENTW	UNDC2		11.68	11.68					26.94	12.76	15.12	15.12
		Network Interface Device Cross Connect - 4W	I		UENTW	UNDC4		11.68	11.68					26.94	12.76	15.12	15.12
SUB-LOOPS																	
	Sub-Loop Feeder																
		USL-Feeder, DS0 Set-up per Cross Box location - CLEC Distribution Facility set-up			UEA, UDN,UCL,UDL,UDC	USBFW		498.09						19.99	19.99	19.99	19.99
		USL Feeder - DS0 Set-up per Cross Box location - per 25 pair set-up			UEA, UDN,UCL,UDL,UDC	USBFX		45.04	45.04					19.99	19.99	19.99	19.99
		USL Feeder DS1 Set-up at DSX location, per DS1 termination			USL	USBFZ		523.51	11.31					19.99	19.99	19.99	19.99

CATEGORY		RATE ELEMENTS	Interim	Zone	BCS	USOC	RATES($)					Svc Order Submitted Elec per LSR	Svc Order Submitted Manually per LSR	Incremental Charge - Manual Svc Order vs. Electronic-1st	Incremental Charge - Manual Svc Order vs. Electronic-Add'l	Incremental Charge - Manual Svc Order vs. Electronic-Disc 1st	Incremental Charge - Manual Svc Order vs. Electronic-Disc Add'l
							Rec	Nonrecurring		Nonrecurring Disconnect		OSS Rates($)					
								First	Add'l	First	Add'l	SOMEC	SOMAN	SOMAN	SOMAN	SOMAN	SOMAN
		Unbundled Sub-Loop Feeder Loop, 2 Wire Ground Start, Voice Grade - Zone 1		1	UEA	USBFA	11.43	122.52	46.61	149.46	59.37			19.99	19.99	19.99	19.99
		Unbundled Sub-Loop Feeder Loop, 2 Wire Ground-Start, Voice Grade - Zone 2		2	UEA	USBFA	18.35	122.52	46.61	149.46	59.37			19.99	19.99	19.99	19.99
		Unbundled Sub-Loop Feeder Loop, Per 2 Wire Ground-Start, Voice Grade - Zone 3		3	UEA	USBFA	21.04	122.52	46.61	149.46	59.37			19.99	19.99	19.99	19.99
		Order Coordination for Specified Conversion Time, per LSR			UEA	OCOSL		45.34									
		Unbundlde Sub-Loop Feeder Loop, 2 Wire Loop-Start, Voice Grade - Zone 1		1	UEA	USBFB	11.43	122.52	46.61	149.46	59.37			19.99	19.99	19.99	19.99
		Unbundled Sub-Loop Feeder Loop, 2 Wire Loop-Start, Voice Grade - Zone 2		2	UEA	USBFB	18.35	122.52	46.61	149.46	59.37			19.99	19.99	19.99	19.99
		Unbundled Sub-Loop Feeder Loop, 2 Wire Start Loop, Voice Grade - Zone 3		3	UEA	USBFB	21.04	122.52	46.61	149.46	59.37			19.99	19.99	19.99	19.99
		Order Coordination for Specified Time Conversion, per LSR			UEA	OCOSL		45.34									
		Unbundled Sub-Loop Feeder Loop, 2 Wire Reverse Battery, Voice Grade - Zone 1		1	UEA	USBFC	11.43	122.52	46.61	149.46	59.37			19.99	19.99	19.99	19.99
		Unbundled Sub-Loop Feeder Loop, 2 Wire Reverse Battery, Voice Grade - Zone 2		2	UEA	USBFC	18.35	122.52	46.61	149.46	59.37			19.99	19.99	19.99	19.99
		Unbundled Sub-Loop Feeder Loop, 2 Wire Analog Reverse Battery, Voice Grade - Zone 3		3	UEA	USBFC	21.04	122.52	46.61	149.46	59.37			19.99	19.99	19.99	19.99
		Order Coordination For Specified Conversion Time, per LSR			UEA	OCOSL		45.34									
		Unbundled Sub-Loop Feeder Loop, 4 Wire Ground-Start, Voice Grade - Zone 1		1	UEA	USBFD	21.91	226.36	144.28					19.99	19.99	19.99	19.99
		Unbundled Sub-Loop Feeder Loop, 4 Wire Ground-Start, Voice Grade - Zone 2		2	UEA	USBFD	35.92	226.36	144.28					19.99	19.99	19.99	19.99
		Unbundled Sub-Loop Feeder Loop, 4 Wire Ground Start, Voice Grade - Zone 3		3	UEA	USBFD	41.37	226.36	144.28					19.99	19.99	19.99	19.99
		Order Coordination For Specified Conversion Time, Per LSR			UEA	OCOSL		45.34									
		Unbundled Sub-Loop Feeder Loop, 4 Wire Loop-Start, Voice Grade - Zone 1		1	UEA	USBFE	21.91	226.36	144.28					19.99	19.99	19.99	19.99
		Unbundled Sub-Loop Feeder Loop, 4 Wire Loop-Start, Voice Grade - Zone 2		2	UEA	USBFE	35.92	226.36	144.28					19.99	19.99	19.99	19.99
		Unbundled Sub-Loop Feeder Loop, 4 Wire Loop-Start, Voice Grade - Zone 3		3	UEA	USBFE	41.37	226.36	144.28					19.99	19.99	19.99	19.99
		Order Coordination For Specified Conversion Time, Per LSR			UEA	OCOSL		45.34									
		Unbundled Sub-Loop Feeder Loop, 2 Wire ISDN BRI - Zone 1		1	UDN	USBFF	19.63	202.01	105.88					19.99	19.99	19.99	19.99
		Unbundled Sub-Loop Feeder Loop, 2-Wire ISDN BRI - Zone 2		2	UDN	USBFF	31.61	202.01	105.88					19.99	19.99	19.99	19.99
		Unbundled Sub-Loop Feeder Loop, 2-Wire ISDN BRI - Zone 3		3	UDN	USBFF	36.27	202.01	105.88					19.99	19.99	19.99	19.99
		Order Coordination For Specified Conversion Time, Per LSR			UDN	OCOSL		45.34									
		Unbundled Sub-Loop Feeder, 2 Wire UDC (IDSL compatible)		1	UDC	USBFS	19.63	202.01	105.88					19.99	19.99	19.99	19.99
		Unbundled Sub-Loop Feeder, 2 Wire UDC (IDSL compatible)		2	UDC	USBFS	31.61	202.01	105.88					19.99	19.99	19.99	19.99
		Unbundled Sub-Loop Feeder, 2 Wire UDC (IDSL compatible)		3	UDC	USBFS	36.27	202.01	105.88					19.99	19.99	19.99	19.99
		Unbundled Sub-Loop Feeder Loop, 4-Wire DS1 - Zone 1		1	USL	USBFG	39.69	393.01	153.37					42.19	12.76		
		Unbundled Sub-Loop Feeder Loop, 4-Wire DS1 - Zone 2		2	USL	USBFG	67.36	393.01	153.37					42.19	12.76		
		Unbundled Sub-Loop Feeder Loop, 4-Wire DS1 - Zone 3		3	USL	USBFG	78.12	393.01	153.37					42.19	12.76		
		Order Coordination For Specified Conversion Time, Per LSR			USL	OCOSL		45.34									
		Unbundled Sub-Loop Feeder, 2-Wire Copper Loop - Zone 1		1	UCL	USBFH	10.66	172.89	90.81					19.99	19.99	19.99	19.99
		Unbundled Sub-Loop Feeder Loop, 2-Wire Copper Loop - Zone 2		2	UCL	USBFH	16.44	172.89	90.81					19.99	19.99	19.99	19.99
		Unbundled Sub-Loop Feeder Loop, 2-Wire Copper Loop - Zone 3		3	UCL	USBFH	18.69	172.89	90.81					19.99	19.99	19.99	19.99
		Order Coordination For Specified Conversion Time, per LSR			UCL	OCOSL		45.34									
		Sub-Loop Feeder - Per 4-Wire Copper Loop - Zone 1		1	UCL	USBFJ	14.68	207.14	134.77					19.99	19.99	19.99	19.99
		Sub-Loop Feeder - Per 4-Wire Copper Loop - Zone 2		2	UCL	USBFJ	23.74	207.14	134.77					19.99	19.99	19.99	19.99
		Sub-Loop Feeder - Per 4-Wire Copper Loop - Zone 3		3	UCL	USBFJ	27.26	207.14	134.77					19.99	19.99	19.99	19.99
		Order Coordination For Specified Conversion Time, per LSR			UCL	OCOSL		45.34									
		Sub-Loop Feeder - Per 4-Wire 19.2 Kbps Digital Grade Loop		1	UDL	USBFN	26.71	215.00	132.92					19.99	19.99	19.99	19.99
		Sub-Loop Feeder - Per 4-Wire 19.2 Kbps Digital Grade Loop		2	UDL	USBFN	44.07	215.00	132.92					19.99	19.99	19.99	19.99
		Sub-Loop Feeder - Per 4-Wire 19.2 Kbps Digital Grade Loop		3	UDL	USBFN	50.83	215.00	132.92					19.99	19.99	19.99	19.99

UNBUNDLED NETWORK ELEMENTS - North Carolina														Attachment: 2		Exhibit: B	
CATEGORY		RATE ELEMENTS	Interim	Zone	BCS	USOC	RATES($)					Svc Order Submitted Elec per LSR	Svc Order Submitted Manually per LSR	Incremental Charge - Manual Svc Order vs. Electronic-1st	Incremental Charge - Manual Svc Order vs. Electronic-Add'l	Incremental Charge - Manual Svc Order vs. Electronic-Disc 1st	Incremental Charge - Manual Svc Order vs. Electronic-Disc Add'l
							Rec	Nonrecurring		Nonrecurring Disconnect		OSS Rates($)					
								First	Add'l	First	Add'l	SOMEC	SOMAN	SOMAN	SOMAN	SOMAN	SOMAN
		Sub-Loop Feeder - Per 4-Wire 56 Kbps Digital Grade Loop - Zone 1		1	UDL	USBFO	26.71	215.00	132.92					19.99	19.99	19.99	19.99
		Sub-Loop Feeder - Per 4-Wire 56 Kbps Digital Grade Loop - Zone 2		2	UDL	USBFO	44.07	215.00	132.92					19.99	19.99	19.99	19.99
		Sub-Loop Feeder - Per 4-Wire 56 Kbps Digital Grade Loop - Zone 3		3	UDL	USBFO	50.83	215.00	132.92					19.99	19.99	19.99	19.99
		Order Coordination For Specified Time Conversion, per LSR			UDL	OCOSL		45.34									
		Sub-Loop Feeder - Per 4-Wire 64 Kbps Digital Grade Loop - Zone 1		1	UDL	USBFP	26.71	215.00	132.92					19.99	19.99	19.99	19.99
		Sub-Loop Feeder - Per 4-Wire 64 Kbps Digital Grade Loop - Zone 2		2	UDL	USBFP	44.07	215.00	132.92					19.99	19.99	19.99	19.99
		Sub-Loop Feeder - Per 4-Wire 64 Kbps Digital Grade Loop - Zone 3		3	UDL	USBFP	50.83	215.00	132.92					19.99	19.99	19.99	19.99
		Order Coordination For Specified Conversion Time, per LSR			UDL	OCOSL		45.34									
SUB-LOOPS																	
	Sub-Loop Feeder																
		Sub Loop Feeder - DS3 - Per Mile Per Month	I		UE3	1L5SL	16.03										
		Sub Loop Feeder - DS3 - Facility Termination Per Month	I		UE3	USBF1	350.32	3,383.00	406.81	164.08	93.01			26.94	12.76		
		Sub Loop Feeder – STS-1 – Per Mile Per Month	I		UDLSX	1L5SL	16.03										
		Sub Loop Feeder - STS-1 - Facility Termination Per Month	I		UDLSX	USBF7	376.06	3,383.00	406.81	164.08	93.01			26.94	12.76		
		Sub Loop Feeder – OC-3 – Per Mile Per Month	I		UDLO3	1L5SL	12.16										
		Sub Loop Feeder - OC-3 - Facility Termination Protection Per Month	I		UDLO3	USBF5	56.60										
		Sub Loop Feeder - OC-3 - Facility Termination Per Month	I		UDLO3	USBF2	564.14	3,383.00	406.81	164.08	93.01			26.94	12.76		
		Sub Loop Feeder - OC-12 - Per Mile Per Month	I		UDL12	1L5SL	14.97										
		Sub Loop Feeder - OC-12 - Facility Termination Protection Per Month	I		UDL12	USBF6	639.50										
		Sub Loop Feeder - OC-12 - Facility Termination Per Month	I		UDL12	USBF3	1,841.00	3,383.00	406.81	164.08	93.01			26.94	12.76		
		Sub Loop Feeder - OC-48 - Per Mile Per Month	I		UDL48	1L5SL	49.10										
		Sub Loop Feeder - OC-48 - Facility Termination Protection Per Month	I		UDL48	USBF9	319.92										
		Sub Loop Feeder - OC-48 - Facility Termination Per Month	I		UDL48	USBF4	1,603.00	3,569.00	406.81	160.39	90.92			26.94	12.76		
		Sub Loop Feeder - OC-12 Interface On OC-48	I		UDL48	USBF8	360.95	787.73	406.81	160.39	90.92			26.94	12.76		
UNBUNDLED LOOP CONCENTRATION																	
		Unbundled Loop Concentration - System A (TR008)			ULC	UCT8A	398.41	652.26	652.26					19.99	19.99	19.99	19.99
		Unbundled Loop Concentration - System B (TR008)			ULC	UCT8B	58.36	271.78	271.78					19.99	19.99	19.99	19.99
		Unbundled Loop Concentration - System A (TR303)			ULC	UCT3A	439.73	652.25	652.26					19.99	19.99	19.99	19.99
		Unbundled Loop Concentration - System B (TR303)			ULC	UCT3B	98.34	271.78	271.78					19.99	19.99	19.99	19.99
		Unbundled Loop Concentration - DS1 Loop Interface Card			ULC	UCTCO	5.52	126.85	92.35	33.65	9.42			19.99	19.99	19.99	19.99
		Unbundled Loop Concentration - ISDN Loop Interface (Brite Card)			UDN	ULCC1	8.77	21.11	21.00	10.81	10.74			19.99	19.99	19.99	19.99
		Unbundled Loop Concentration - UDC Loop Interface (Brite Card)			UDC	ULCCU	8.77	21.11	21.00	10.81	10.74			19.99	19.99	19.99	19.99
		Unbundled Loop Concentration - -2 Wire Voice-Loop Start or Ground Start Loop Interface (POTS Card)			UEA	ULCC2	2.19	21.11	21.00	10.81	10.74			19.99	19.99	19.99	19.99
		Unbundled Loop Concentration - 2 Wire Voice - Reverse Battery Loop Interface (SPOTS Card)			UEA	ULCCR	13.03	21.11	21.00	10.81	10.74			19.99	19.99	19.99	19.99
		Unbundled Loop Concentration - 4 Wire Voice Loop Interface (Specials Card)			UEA	ULCC4	7.77	21.11	21.00	10.81	10.74			19.99	19.99	19.99	19.99
		Unbundled Loop Concentration - TEST CIRCUIT Card			ULC	UCTTC	37.98	21.11	21.00	10.81	10.74			19.99	19.99	19.99	19.99
		Unbundled Loop Concentration - Digital 19.2 Kbps Data Loop Interface			UDL	ULCC7	11.51	21.11	21.00	10.81	10.74			19.99	19.99	19.99	19.99
		Unbundled Loop Concentration - Digital 56 Kbps Data Loop Interface			UDL	ULCC5	11.51	21.11	21.00	10.81	10.74			19.99	19.99	19.99	19.99
		Unbundled Loop Concentration - Digital 64 Kbps Data Loop Interface			UDL	ULCC6	11.51	21.11	21.00	10.81	10.74			19.99	19.99	19.99	19.99
UNE OTHER, PROVISIONING ONLY - NO RATE																	
		NID - Dispatch and Service Order for NID installation			UENTW	UNDBX											
		UNTW Circuit Id Establishment, Provisioning Only - No Rate			UENTW	UENCE											

UNBUNDLED NETWORK ELEMENTS - North Carolina													Attachment: 2		Exhibit: B	
CATEGORY		RATE ELEMENTS	Interim	Zone	BCS	USOC	RATES($)					Svc Order Submitted Elec per LSR	Svc Order Submitted Manually per LSR	Incremental Charge - Manual Svc Order vs. Electronic-1st	Incremental Charge - Manual Svc Order vs. Electronic-Add'l	Incremental Charge - Manual Svc Order vs. Electronic-Disc 1st	Incremental Charge - Manual Svc Order vs. Electronic-Disc Add'l
							Rec	Nonrecurring		Nonrecurring Disconnect		OSS Rates($)					
								First	Add'l	First	Add'l	SOMEC	SOMAN	SOMAN	SOMAN	SOMAN	SOMAN
		Unbundled Contract Name, Provisioning Only - No Rate			UEANL,UEF,UEQ,UENTW	UNECN											
UNE OTHER, PROVISIONING ONLY - NO RATE																	
		Unbundled Contact Name, Provisioning Only - no rate			UAL,UCL,UDC,UDL,UDN,UEA,UHL,ULC	UNECN	0.00	0.00									
		Unbundled Sub-Loop Feeder-2 Wire Cross Box Jumper - no rate			UEA,UDN,UCL,UDC	USBFQ	0.00	0.00									
		Unbundled Sub-Loop Feeder-4 Wire Cross Box Jumper - no rate			UEA,USL,UCL,UDL	USBFR	0.00	0.00									
		Unbundled DS1 Loop - Superframe Format Option - no rate			USL	CCOSF	0.00	0.00									
		Unbundled DS1 Loop - Expanded Superframe Format option - no rate			USL	CCOEF	0.00	0.00									
HIGH CAPACITY UNBUNDLED LOCAL LOOP																	
		High Capacity Unbundled Local Loop - DS3 - Per Mile per month			UE3	1L5ND	11.12										
		High Capacity Unbundled Local Loop - DS3 - Facility Termination per month			UE3	UE3PX	404.98	1,124.48	699.60					53.48	53.48		
		High Capacity Unbundled Local Loop - STS-1 - Per Mile per month			UDLSX	1L5ND	11.12										
		High Capacity Unbundled Local Loop - STS-1 - Facility Termination per month			UDLSX	UDLS1	417.70	1,124.48	699.60					53.48	53.48		
LOOP MAKE-UP																	
		Loop Makeup - Preordering Without Reservation, per working or spare facility queried (Manual).			UMK	UMKLW		56.34	56.34								
		Loop Makeup - Preordering With Reservation, per spare facility queried (Manual).			UMK	UMKLP		58.56	58.56								
		Loop Makeup--With or Without Reservation, per working or spare facility queried (Mechanized)			UMK	PSUMK		1.04	1.04								
HIGH FREQUENCY SPECTRUM																	
	SPLITTERS-CENTRAL OFFICE BASED																
		Line Sharing Splitter, per System 96 Line Capacity			ULS	ULSDA	152.73	424.61	0.00					26.94	12.76		
		Line Sharing Splitter, per System 24 Line Capacity			ULS	ULSDB	38.18	424.61	0.00					26.94	12.76		
		Line Sharing Splitter, Per System, 8 Line Capacity	I		ULS	ULSD8	12.73	424.61	0.00					26.94	12.76		
		Line Sharing-DLEC Owned Splitter in CO-CFA activaton-deactivation (per LSOD)			ULS	ULSDG		146.32	31.27					26.94	12.76		
	END USER ORDERING-CENTRAL OFFICE BASED-HIGH FREQUENCY SPECTRUM AKA LINE SHARING																
		Line Sharing - per Line Activation (BST Owned Splitter)			ULS	ULSDC	0.61	56.92	28.59					26.94	12.76		
		Line Sharing - per Subsequent Activity per Line Rearrangement(BST Owned Splitter			ULS	ULSDS		35.14	16.29					26.94	12.76		
		Line Sharing - per Subsequent Activity per Line Rearrangement(DLEC Owned Splitter			ULS	ULSCS		35.14	16.29					26.94	12.76		
		Line Sharing - per Line Activation (DLEC owned Splitter)	I		ULS	ULSCC	0.61	47.44	19.31	20.67	12.74			26.94	12.76		
		Line Splitting - per line activation DLEC owned splitter	I		UEPSR UEPSB	UREOS	0.61										
		Line Splitting - per line activation BST owned - physical	I		UEPSR UEPSB	UREBP	0.641	56.92	28.59					26.94	12.76		
		Line Splitting - per line activation BST owned - virtual	I		UEPSR UEPSB	UREBV	0.639	56.92	28.59					26.94	12.76		
UNBUNDLED DEDICATED TRANSPORT																	
	NOTE: INTEROFFICE CHANNEL DEDICATED TRANSPORT - minimum billing period - below DS3=one month, DS3/STS-1=four months																
	INTEROFFICE CHANNEL - DEDICATED TRANSPORT																
		Interoffice Channel - Dedicated Transport - 2-Wire Voice Grade - Per Mile per month			U1TVX	1L5XX	0.0282										
		Interoffice Channel - Dedicated Transport- 2- Wire Voice Grade - Facility Termination per month			U1TVX	U1TV2	18.00	137.48	52.58					38.07	38.07		
		Interoffice Channel - Dedicated Transpor t- 2-Wire Voice Grade Rev Bat. - Per Mile per month			U1TVX	1L5XX	0.0282										
		Interoffice Channel - Dedicated Transport- 2- Wire VG Rev Bat. - Facility Termination per month			U1TVX	U1TR2	18.00	137.48	52.58					38.07	38.07		
		Interoffice Channel - Dedicated Transport - 4-Wire Voice Grade - Per Mile per month			U1TVX	1L5XX	0.0282										

UNBUNDLED NETWORK ELEMENTS - North Carolina														Attachment: 2		Exhibit: B	
CATEGORY		RATE ELEMENTS	Interim	Zone	BCS	USOC	RATES($)					Svc Order Submitted Elec per LSR	Svc Order Submitted Manually per LSR	Incremental Charge - Manual Svc Order vs. Electronic-1st	Incremental Charge - Manual Svc Order vs. Electronic-Add'l	Incremental Charge - Manual Svc Order vs. Electronic-Disc 1st	Incremental Charge - Manual Svc Order vs. Electronic-Disc Add'l
							Rec	Nonrecurring		Nonrecurring Disconnect		OSS Rates($)					
								First	Add'l	First	Add'l	SOMEC	SOMAN	SOMAN	SOMAN	SOMAN	SOMAN
		Interoffice Channel - Dedicated Transport - 4- Wire Voice Grade - Facility Termination per month			U1TVX	U1TV4	22.16	106.11	65.95					38.07	38.07		
		Interoffice Channel - Dedicated Transport - 56 kbps - per mile per month			U1TDX	1L5XX	0.0282										
		Interoffice Channel - Dedicated Transport - 56 kbps - Facility Termination per month			U1TDX	U1TD5	17.40	137.48	52.58					38.07	38.07		
		Interoffice Channel - Dedicated Transport - 64 kbps - per mile per month			U1TDX	1L5XX	0.0282										
		Interoffice Channel - Dedicated Transport - 64 kbps - Facility Termination per month			U1TDX	U1TD6	17.40	137.48	52.58					38.07	38.07		
		Interoffice Channel - Dedicated Channel - DS1 - Per Mile per month			U1TD1	1L5XX	0.5753										
		Interoffice Channel - Dedicated Tranport - DS1 - Facility Termination per month			U1TD1	U1TF1	71.29	217.17	163.75					38.07	38.07		
		Interoffice Channel - Dedicated Transport - DS3 - Per Mile per month			U1TD3	1L5XX	12.98										
		Interoffice Channel - Dedicated Transport - DS3 - Facility Termination per month			U1TD3	U1TF3	720.38	794.94	579.55					91.26	91.26		
		Interoffice Channel - Dedicated Transport - STS-1 - Per Mile per month			U1TS1	1L5XX	6.14										
		Interoffice Channel - Dedicated Transport - STS-1 - Facility Termination per month			U1TS1	U1TFS	790.37	642.23	408.89					53.48	53.48		
	LOCAL CHANNEL - DEDICATED TRANSPORT																
	NOTE: LOCAL CHANNEL DEDICATED TRANSPORT - minimum billing period - below DS3=one month, DS3/STS-1=four months																
		Local Channel - Dedicated - 2-Wire Voice Grade Per Month			ULDVX	ULDV2								42.17	12.76		
		Local Channel - Dedicated - 2-Wire Voice Grade per month - Zone 1		1	ULDVX	ULDV2	12.51	553.80	89.69								
		Local Channel - Dedicated - 2-Wire Voice Grade per month - Zone 2		2	ULDVX	ULDV2	21.23	553.80	89.69								
		Local Channel - Dedicated - 2-Wire Voice Grade per month - Zone 3		3	UNDVX	ULDV2	24.62	553.80	89.69								
		Local Channel - Dedicated - 4-Wire Voice Grade per month - Zone 1		1	UNDVX	ULDV4	13.40	562.23	92.67								
		Local Channel - Dedicated - 4-Wire Voice Grade per month - Zone 2		2	UNDVX	ULDV4	22.73	562.23	92.67								
		Local Channel - Dedicated - 4-Wire Voice Grade per month - Zone 3		3	UNDVX	ULDV4	26.37	562.23	92.67								
		Local Channel - Dedicated - DS1 per month - Zone 1		1	ULDD1	ULDF1	30.12	534.48	462.69					42.17	12.76		
		Local Channel - Dedicated - DS1 per month - Zone 2		2	ULDD1	ULDF1	51.11	534.48	462.69					42.17	12.76		
		Local Channel - Dedicated - DS1 per month - Zone 3		3	ULDD1	ULDF1	59.28	534.48	462.69					42.17	12.76		
		Local Channel - Dedicated - DS3 - Per Mile per month			ULDD3	1L5NC	8.66										
		Local Channel - Dedicated - DS3 - Facility Termination per month			ULDD3	ULDF3	496.76	562.25	527.88					56.25	56.25		
		Local Channel - Dedicated - STS-1- Per Mile per month			ULDS1	1L5NC	8.66										
		Local Channel - Dedicated - STS-1 - Facility Termination per month			ULDS1	ULDFS	484.06	1,071.00	646.12					38.07	38.07		
MULTIPLEXERS																	
		Channelization - DS1 to DS0 Channel System			UXTD1	MQ1	146.69	197.78	140.06					24.85	8.16		
		OCU-DP COCI (data) - DS1 to DS0 Channel System - per month (2.4-64kbs)			UDL	1D1DD	2.00	13.09	9.38					24.85	8.16		
		2-wire ISDN COCI (BRITE) - DS1 to DS0 Channel Systsem - per month			UDN	UC1CA	3.59	13.09	9.38					24.85	8.16		
		Voice Grade COCI - DS1 to DS0 Channel System - per month			UEA	1D1VG	1.27	13.09	9.38					24.85	8.16		
		DS3 to DS1 Channel System per month			UXTD3	MQ3	233.10	403.97	234.40					24.78	7.42		
		STS1 to DS1 Channel System per month			UXTS1	MQ3	233.10	403.97	234.40					38.07	38.07		
		DS3 Interface Unit (DS1 COCI) used with Loop per month			USL	UC1D1	16.07	13.09	9.38					24.85	8.16		
		DS3 Interface Unit (DS1 COCI) used with Local Channel per month			ULDD1	UC1D1	16.07	13.09	9.38					24.85	8.16		

UNBUNDLED NETWORK ELEMENTS - North Carolina														Attachment: 2		Exhibit: B	
CATEGORY		RATE ELEMENTS	Interim	Zone	BCS	USOC	RATES($)					Svc Order Submitted Elec per LSR	Svc Order Submitted Manually per LSR	Incremental Charge - Manual Svc Order vs. Electronic-1st	Incremental Charge - Manual Svc Order vs. Electronic-Add'l	Incremental Charge - Manual Svc Order vs. Electronic-Disc 1st	Incremental Charge - Manual Svc Order vs. Electronic-Disc Add'l
							Rec	Nonrecurring		Nonrecurring Disconnect		OSS Rates($)					
								First	Add'l	First	Add'l	SOMEC	SOMAN	SOMAN	SOMAN	SOMAN	SOMAN
		DS3 Interface Unit (DS1 COCI) used with Interoffice Channel per month			U1TD1	UC1D1	16.07	13.09	9.38					24.85	8.16		
DARK FIBER																	
		Dark Fiber, Four Fiber Strands, Per Route Mile or Fraction Thereof per month - Local Channel			UDF	1L5DC	53.86										
		NRC Dark Fiber - Local Channel			UDF	UDFC4		1,807.00	562.96					38.07	38.07		
		Dark Fiber, Four Fiber Strands, Per Route Mile or Fraction Thereof per month - Interoffice Channel			UDF	1L5DF	27.71										
		NRC Dark Fiber - Interoffice Channel			UDF	UDF14		1,807.00	562.96					38.07	38.07		
		Dark Fiber, Four Fiber Strands, Per Route Mile or Fraction Thereof per month - Local Loop			UDF	1L5DL	53.86										
		NRC Dark Fiber - Local Loop			UDF	UDFL4		1,807.00	562.96					38.07	38.07		
TRANSPORT OTHER																	
	Optional Features & Functions:																
8XX ACCESS TEN DIGIT SCREENING																	
		8XX Access Ten Digit Screening, Per Call			OHD		0.0005										
		8XX Access Ten Digit Screening, Reservation Charge Per 8XX Number Reserved			OHD	N8R1X		7.05	0.96					26.94	26.94		
		8XX Access Ten Digit Screening, Per 8XX No. Established W/O POTS Translations			OHD			23.82	2.73					26.94	26.94		
		8XX Access Ten Digit Screening, Per 8XX No. Established With POTS Translations			OHD	N8FTX		23.82	2.73					26.94	26.94		
		8XX Access Ten Digit Screening, Customized Area of Service Per 8XX Number			OHD	N8FCX		5.63	2.82					26.94	26.94		
		8XX Access Ten Digit Screening, Multiple InterLATA CXR Routing Per CXR Requested Per 8XX No.			OHD	N8FMX		6.59	3.77					26.94	26.94		
		8XX Access Ten Digit Screening, Change Charge Per Request			OHD	N8FAX		8.01	0.96					26.94	26.94		
		8XX Access Ten Digit Screening, Call Handling and Destination Features			OHD	N8FDX		5.63						26.94	26.94		
LINE INFORMATION DATA BASE ACCESS (LIDB)																	
		LIDB Common Transport Per Query			OQT		0.0003										
		LIDB Validation Per Query			OQU		0.0134										
		LIDB Originating Point Code Establishment or Change			OQT, OQU	NRPBX		62.26						26.94	26.94		
SIGNALING (CCS7)																	
		CCS7 Signaling Termination, Per STP Port			UDB	PT8SX	132.83										
		CCS7 Signaling Usage, Per TCAP Message			UDB		0.00009										
		CCS7 Signaling Connection, Per link (A link)			UDB	TPP++	18.22	278.02	278.02					19.99	19.99	19.99	19.99
		CCS7 Signaling Connection, Per link (B link) (also known as D link)			UDB	TPP++	18.22	278.02	278.02					19.99	19.99	19.99	19.99
		CCS7 Signaling Usage, Per ISUP Message			UDB		0.00004										
		CCS7 Signaling Usage Surrogate, per link per LATA			UDB	STU56	338.98										
		CCS7 Signaling Point Code, per Originating Point Code Establishment or Change, per STP affected			UDB	CCAPO		40.00	40.00					19.99	19.99	19.99	19.99
		CCS7 Signaling Point Code, per Destination Point Code Establishment or Change, Per Stp Affected			UDB	CCAPD		8.00	8.00					19.99	19.99	19.99	19.99
CALLING NAME (CNAM) SERVICE																	
		CNAM for DB Owners, Per Query			OQV		0.01										
		CNAM for Non DB Owners, Per Query			OQV		0.01										
		CNAM (Non-Databs Owner), NRC, applies when using the Character Based User Interface (CHUI)			OQV	CDDCH		595.00	595.00					26.94	26.94		
OPERATOR CALL PROCESSING																	
		Oper. Call Processing - Oper. Provided, Per Min. - Using BST LIDB					1.20										
		Oper. Call Processing - Oper. Provided, Per Min. - Using Foreign LIDB					1.24										
		Oper. Call Processing - Fully Automated, per Call - Using BST LIDB					0.20										
		Oper. Call Processing - Fully Automated, per Call - Using Foreign LIDB					0.20										

UNBUNDLED NETWORK ELEMENTS - North Carolina													Attachment: 2		Exhibit: B	
CATEGORY	RATE ELEMENTS	Interim	Zone	BCS	USOC	RATES($)					Svc Order Submitted Elec per LSR	Svc Order Submitted Manually per LSR	Incremental Charge - Manual Svc Order vs. Electronic-1st	Incremental Charge - Manual Svc Order vs. Electronic-Add'l	Incremental Charge - Manual Svc Order vs. Electronic-Disc 1st	Incremental Charge - Manual Svc Order vs. Electronic-Disc Add'l
						Rec	Nonrecurring		Nonrecurring Disconnect		OSS Rates($)					
							First	Add'l	First	Add'l	SOMEC	SOMAN	SOMAN	SOMAN	SOMAN	SOMAN
INWARD OPERATOR SERVICES																
	Inward Operator Services - Verification, Per Minute					1.15										
	Inward Operator Services - Verification and Emergency Interrupt - Per Minute					1.15										
BRANDING - OPERATOR CALL PROCESSING																
	Recording of Custom Branded OA Announcement				CBAOS		7,000.00	7,000.00					19.99	19.99	19.99	19.99
	Loading of Custom Branded OA Announcement per shelf/NAV				CBAOL		500.00	500.00					19.99	19.99		
Unbranding via OLNS for UNEP CLEC																
	Loading of OA per OCN (Regional)						1,200.00	1,200.00								
DIRECTORY ASSISTANCE SERVICES																
DIRECTORY ASSISTANCE ACCESS SERVICE																
	Directory Assistance Access Service Calls, Charge Per Call					0.275										
DIRECTORY ASSISTANCE CALL COMPLETION ACCESS SERVICE (DACC)																
	Directory Assistance Call Completion Access Service (DACC), Per Call Attempt					0.062										
DIRECTORY TRANSPORT																
DIRECTORY ASSISTANCE SERVICES																
DIRECTORY ASSISTANCE DATA BASE SERVICE (DADS)																
	Directory Assistance Data Base Service Charge Per Listing					0.04										
	Directory Assistance Data Base Service, per month				DBSOF	150.00										
BRANDING - DIRECTORY ASSISTANCE																
Facility Based CLEC																
	Recording and Provisioning of DA Custom Branded Announcement			AMT	CBADA		6,000.00	6,000.00								
	Loading of Custom Branded Announcement per DRAM Card/Switch			AMT	CBADC		1,170.00	1,170.00								
UNEP CLEC																
	Recording of DA Custom Branded Announcement						3,000.00	3,000.00								
	Loading of DA Custom Branded Announcement per DRAM Card/Switch per OCN						1,170.00	1,170.00								
Unbranding via OLNS for UNEP CLEC																
	Loading of DA per OCN (1 OCN per Order)						420.00	420.00								
	Loading of DA per Switch per OCN						16.00	16.00								
SELECTIVE ROUTING																
	Selective Routing Per Unique Line Class Code Per Request Per Switch				USRCR		229.65	229.65					40.18	9.45		
VIRTUAL COLLOCATION																
	Virtual Collocation - Application Cost			AMTFS	EAF		2,848.30	2,848.30								
	Virtual Collocation - Cable Installation Cost, per cable			AMTFS	ESPCX		2,750.00	2,750.00								
	Virtual Collocation - Floor Space, per sq. ft.			AMTFS	ESPVX	3.20										
	Virtual Collocation - Power, per breaker amp			AMTFS	ESPAX	3.48										
	Virtual Collocation - Cable Support Structure, per entrance cable			AMTFS	ESPSX	13.35										
	Virtual Collocation - 2-wire Cross Connects (loop)			UEANL,UEA,UDN,UDC,UAL,UHL,UCL,UEQ, AMTFS, UDL, UNCVX, UNCDX, UNCNX	UEAC2	0.09	41.78	39.23	4.75	4.75			19.99	19.99	19.99	19.99
	Virtual Collocation - 4-wire Cross Connects (loop)			UEA,UHL,UCL,UDL, AMTFS, UAL, UDN, UNCVX, UNCDX	UEAC4	0.18	41.91	39.25	4.73	4.73			19.99	19.99	19.99	19.99
	Virtual Collocation - 2-Fiber Cross Connects			AMTFS,UDL12, UDLO3, U1T48, U1T12, U1T03, ULDO3, ULD12, ULD48, UDF	CNC2F	15.99	67.34	48.55					19.99	19.99	19.99	19.99

UNBUNDLED NETWORK ELEMENTS - North Carolina														Attachment: 2		Exhibit: B	
CATEGORY		RATE ELEMENTS	Interim	Zone	BCS	USOC	RATES($)					Svc Order Submitted Elec per LSR	Svc Order Submitted Manually per LSR	Incremental Charge - Manual Svc Order vs. Electronic-1st	Incremental Charge - Manual Svc Order vs. Electronic-Add'l	Incremental Charge - Manual Svc Order vs. Electronic-Disc 1st	Incremental Charge - Manual Svc Order vs. Electronic-Disc Add'l
							Rec	Nonrecurring		Nonrecurring Disconnect		OSS Rates($)					
								First	Add'l	First	Add'l	SOMEC	SOMAN	SOMAN	SOMAN	SOMAN	SOMAN
		Virtual Collocation - 4-Fiber Cross Connects			AMTFS,UDL12, UDLO3, U1T48, U1T12, U1T03, ULDO3, ULD12, ULD48, UDF	CNC4F	28.74	82.35	63.56					19.99	19.99	19.99	19.99
		Virtual collocation - DS1 Cross Connects			USL,ULC,AMTFS, ULR, UXTD1, UNC1X, ULDD1, U1TD1, USLEL, UNLD1	CNC1X	0.97	71.02	51.08								
		Virtual collocation - DS3 Cross Connects			USL,ULC,AMTFS,UE3, U1TD3, UXTS1, UXTD3, UNC3X, UNCSX, ULDD3, U1TS1, ULDS1, UDLSX, UNLD3	CND3X	56.25	151.90	11.83								
		Virtual Collocation - Co-Carrier Cross Connects - Fiber Cable Support Structure, per linear foot			AMTFS	VE1CB	0.0028										
		Virtual Collocation - Co-Carrier Cross Connects - Copper/Coax Cable Support Structure, per linear ft			AMTFS	VE1CD	0.0041										
		Virtual Collocation - Co-Carrier Cross Connects - Fiber Cable Support Structure,per cable			AMTFS	VE1CC		532.72									
		Virtual Collocation - Co-Carrier Cross Connects - Copper/Coax Cable Support Structure, per cable			AMTFS	VE1CE		532.72									
		Virtual collocation - Security Escort - Basic, per half hour			AMTFS	SPTBX		41.00	25.00								
		Virtual collocation - Security Escort - Overtime, per half hour			AMTFS	SPTOX		48.00	30.00								
		Virtual collocation - Security Escort - Premium, per half hour			AMTFS	SPTPX		55.00	35.00								
		Virtual collocation - Maintenance in CO - Basic, per half hour			AMTFS	CTRLX		30.64	30.64								
		Virtual collocation - Maintenance in CO - Overtime, per half hour			AMTFS	SPTOM		35.77	35.77								
		Virtual collocation - Maintenance in CO - Premium per half hour			AMTFS	SPTPM		40.90	40.90								
VIRTUAL COLLOCATION																	
		Virtual Collocation - 2-wire Cross Connect, Exchange Port 2-Wire Analog - Res			UEPSR	VE1R2	0.09	41.78	39.23					26.94	12.76		
		Virtual Collocation 2-Wire Cross Connect, Exchange Port 2-Wire Line Side PBX Trunk - Bus			UEPSP	VE1R2	0.09	41.78	39.23					26.94	12.76		
		Virtual Collocation 2-Wire Cross Connect, Exchange Port 2-Wire Voice Grade PBX Trunk - Res			UEPSE	VE1R2	0.09	41.78	39.23					26.94	12.76		
		Virtual Collocation 2-Wire Cross Connect, Exchange Port 2-Wire Analog Bus			UEPSB	VE1R2	0.09	41.78	39.23					26.94	12.76		
		Virtual Collocation 2-Wire Cross Connect, Exchnage Port 2-Wire ISDN			UEPSX	VE1R2	0.09	41.78	39.23					26.94	12.76		
		Virtual Collocation 2-Wire Cross Connect, Exchange Port 2-Wire ISDN			UEPTX	VE1R2	0.09	41.78	39.23					26.94	12.76		
		Virtual Collocation 4-Wire Cross Connect, Exchange Port 4-Wire ISDN DS1			UEPEX	VE1R4	0.18	41.91	39.25					26.94	12.76		
VIRTUAL COLLOCATION																	
		Virtual Collocation-2 Wire Cross Connects (Loop) for Line Splitting			UEPSR, UEPSB	VE1LS	0.0287	33.96	32.08	36.72	34.84			19.99	19.99		
AIN SELECTIVE CARRIER ROUTING																	
		Regional Service Establishment			SRC	SRCEC		391,788.00						19.99	19.99	19.99	19.99
		End Office Establishment			SRC	SRCEO		320.53	320.53					19.99	19.99	19.99	19.99
		Line/Port NRC, per end user			SRC	SRCLP		2.06	2.06					19.99	19.99	19.99	19.99
		Query NRC, per query			SRC		0.000448										
AIN - BELLSOUTH AIN SMS ACCESS SERVICE																	
		AIN SMS Access Service - Service Establishment, Per State, Initial Setup			A1N	CAMSE		294.77	294.77					26.94	26.94		

UNBUNDLED NETWORK ELEMENTS - North Carolina														Attachment: 2		Exhibit: B	
CATEGORY		RATE ELEMENTS	Interim	Zone	BCS	USOC	RATES($)					Svc Order Submitted Elec per LSR	Svc Order Submitted Manually per LSR	Incremental Charge - Manual Svc Order vs. Electronic-1st	Incremental Charge - Manual Svc Order vs. Electronic-Add'l	Incremental Charge - Manual Svc Order vs. Electronic-Disc 1st	Incremental Charge - Manual Svc Order vs. Electronic-Disc Add'l
							Rec	Nonrecurring		Nonrecurring Disconnect		OSS Rates($)					
								First	Add'l	First	Add'l	SOMEC	SOMAN	SOMAN	SOMAN	SOMAN	SOMAN
		AIN SMS Access Service - Port Connection - Dial/Shared Access			A1N	CAMDP		86.94	86.94					26.94	26.94		
		AIN SMS Access Service - Port Connection - ISDN Access			A1N	CAM1P		86.94	86.94					26.94	26.94		
		AIN SMS Access Service - User Identification Codes - Per User ID Code			A1N	CAMAU		200.83	200.83					26.94	26.94		
		AIN SMS Access Service - Security Card, Per User ID Code, Initial or Replacement			A1N	CAMRC		172.05	172.05					26.94	26.94		
		AIN SMS Access Service - Storage, Per Unit (100 Kilobytes)					0.0023										
		AIN SMS Access Service - Session, Per Minute					0.0791										
		AIN SMS Access Service - Company Performed Session, Per Minute					2.08										
AIN - BELLSOUTH AIN TOOLKIT SERVICE																	
		AIN Toolkit Service - Service Establishment Charge, Per State, Initial Setup			CAM	BAPSC		290.05	290.05				15.69				
		AIN Toolkit Service - Training Session, Per Customer				BAPVX		8,363.00	8,363.00				15.69				
		AIN Toolkit Service - Trigger Access Charge, Per Trigger, Per DN, Term. Attempt				BAPTT		72.76	72.76				15.69				
		AIN Toolkit Service - Trigger Access Charge, Per Trigger, Per DN, Off-Hook Delay				BAPTD		72.76	72.76				15.69				
		AIN Toolkit Service - Trigger Access Charge, Per Trigger, Per DN, Off-Hook Immediate				BAPTM		72.76	72.76				15.69				
		AIN Toolkit Service - Trigger Access Charge, Per Trigger, Per DN, 10-Digit PODP				BAPTO		149.95	149.95				15.69				
		AIN Toolkit Service - Trigger Access Charge, Per Trigger, Per DN, CDP				BAPTC		149.95	149.95				15.69				
		AIN Toolkit Service - Trigger Access Charge, Per Trigger, Per DN, Feature Code				BAPTF		149.95	149.95				15.69				
		AIN Toolkit Service - Query Charge, Per Query					0.02										
		AIN Toolkit Service - Type 1 Node Charge, Per AIN Toolkit Subscription, Per Node, Per Query					0.005										
		AIN Toolkit Service - SCP Storage Charge, Per SMS Access Account, Per 100 Kilobytes					1.45										
		AIN Toolkit Service - Monthly report - Per AIN Toolkit Service Subscription			CAM	BAPMS	15.98	71.80	71.80				15.69				
		AIN Toolkit Service - Special Study - Per AIN Toolkit Service Subscription			CAM	BAPLS	0.08	47.20	47.20				15.69				
		AIN Toolkit Service - Call Event Report - Per AIN Toolkit Service Subscription			CAM	BAPDS	15.90	71.80	71.80				15.69				
		AIN Toolkit Service - Call Event Special Study - Per AIN Toolkit Service Subscription			CAM	BAPES	0.003	47.20	47.20				15.69				
ENHANCED EXTENDED LINK (EELs)																	
	NOTE: New EELs available in GA, TN, KY, LA, MS, & SC and density zone 1 of following MSAs: Orlando, FL; Miami, FL; Ft. Lauderdale, FL;																
	NOTE: Charlotte-Gastonia-Rockhill, NC; Greensboro-Winston Salem-High Point, NC. Use all rates below except Switch As Is Charge.																
	NOTE: In all states, EEL network elements shown below also apply to currently combined facilities which are converted to UNE rates. A Switch As Is Charge applies to currently combined facilities converted to UNEs.(Non-recurring rates do not apply.)																
	NOTE: In GA, TN, KY, LA, MS & SC the EEL network elements apply to ordinarily combined network elements.(No Switch As Is Charge.)																
	2-WIRE VOICE GRADE EXTENDED LOOP WITH DEDICATED DS1 INTEROFFICE TRANSPORT (EEL)																
		First 2-Wire VG Loop - Service Level 2/DS1 Interofficed Transport Combination - Statewide		sw	UNCVX	UEAL2	19.50	142.97	106.56					38.07	38.07		
		Interoffice Transport - Dedicated - DS1 combination - Per Mile per month			UNC1X	1L5XX	0.5753										
		Interoffice Transport - Dedicated - DS1 combination - Facility Termination per month			UNC1X	U1TF1	71.29	217.17	163.75					38.07	38.07		
		DS1 Channelization System Per Month			UNC1X	MQ1	146.69	197.78	140.06					38.07	38.07		
		Voice Grade COCI - DS1 To Ds0 Interface - Per Month			UNCVX	1D1VG	1.27	13.09	9.38					38.07	38.07		
		Each Additional 2-Wire Vg Loop(Sl2) In The Same Ds1 Interoffice Transport Combination Per Month			UNCVX	UEAL2	19.50	142.97	108.56					38.07	38.07		
		Each Additional 2-Wire VG Loop(SL2) in the same DS1 Interoffice Transport Combination - Zone 3		3	UNCVX	UEAL2											

CATEGORY		RATE ELEMENTS	Interim	Zone	BCS	USOC	RATES($)					Svc Order Submitted Elec per LSR	Svc Order Submitted Manually per LSR	Incremental Charge - Manual Svc Order vs. Electronic-1st	Incremental Charge - Manual Svc Order vs. Electronic-Add'l	Incremental Charge - Manual Svc Order vs. Electronic-Disc 1st	Incremental Charge - Manual Svc Order vs. Electronic-Disc Add'l
							Rec	Nonrecurring		Nonrecurring Disconnect		OSS Rates($)					
								First	Add'l	First	Add'l	SOMEC	SOMAN	SOMAN	SOMAN	SOMAN	SOMAN
		Voice Grade COCI - DS1 to DS0 Channel System combination - per month			UNCVX	1D1VG	1.27	13.09	9.38					38.07	38.07		
		Nonrecurring Currently Combined Network Elements Switch -As-Is Charge			UNC1X	UNCCC		21.75	21.75	32.28	10.96			38.07	38.07		
	4-WIRE VOICE GRADE EXTENDED LOOP WITH DEDICATED DS1 INTEROFFICE TRANSPORT (EEL)																
		First 4-Wire Analog Voice Grade Loop/DS1 Interoffice Transport Combination - Statewide		sw	UNCVX	UEAL4	27.49	288.47	237.45					38.07	38.07		
		Interoffice Transport - Dedicated - DS1 combination - Per Mile Per Month			UNC1X	1L5XX	0.5753										
		Interoffice Transport - Dedicated - DS1 - Facility Termination Per Month			UNC1X	U1TF1	71.29	217.17	163.75					38.07	38.07		
		Channelization - Channel System DS1 to DS0 combination Per Month			UNC1X	MQ1	146.69	197.78	140.06					38.07	38.07		
		Voice Grade COCI - DS1 to DS0 Channel System combination - per month			UNCVX	1D1VG	1.27	13.09	9.38					38.07	38.07		
		Additional 4-Wire Analog Voice Grade Loop in same DS1 Interoffice Transport Combination - Statewide		sw	UNCVX	UEAL4	27.49	288.47	237.45					38.07	38.07		
		Voice Grade COCI - DS1 to DS0 Channel System combination - per month			UNCVX	1D1VG	1.27	13.09	9.38					38.07	38.07		
		Nonrecurring Currently Combined Network Elements Switch -As-Is Charge			UNC1X	UNCCC		21.75	21.75	32.28	10.96			38.07	38.07		
	4-WIRE 56 KBPS EXTENDED DIGITAL LOOP WITH DEDICATED DS1 INTEROFFICE TRANSPORT (EEL)																
		First 4-Wire 56Kbps Digital Grade Loop/DS1 Interoffice Transport Combination - Statewide		sw	UNCDX	UDL56	37.67	489.04	337.51					38.07	38.07		
		Interoffice Transport - Dedicated - DS1 combination - Per Mile Per Month			UNC1X	1L5XX	0.5753										
		Interoffice Transport - Dedicated - DS1 - combination Facility Termination Per Month			UNC1X	U1TF1	71.29	217.17	163.75					38.07	38.07		
		Channelization - Channel System DS1 to DS0 combination Per Month			UNC1X	MQ1	146.69	197.78	140.06					38.07	38.07		
		OCU-DP COCI (data) - DS1 to DS0 Channel System - per month (2.4-64kbs)			UNCDX	1D1DD	2.00	15.76	11.28					38.07	38.07		
		Additional 4-Wire 56Kbps Digital Grade Loopin same DS1 Interoffice Transport Combination - Statewide		sw	UNCDX	UDL56	37.67	489.04	337.51					38.07	38.07		
		OCU-DP COCI (data) - DS1 to DS0 Channel System - combination per month (2.4-64kbs)			UNCDX	1D1DD	2.00	15.76	11.28					38.07	38.07		
		Nonrecurring Currently Combined Network Elements Switch -As-Is Charge			UNC1X	UNCCC		21.75	21.75	32.28	10.96			38.07	38.07		
	4-WIRE 64 KBPS EXTENDED DIGITAL LOOP WITH DEDICATED DS1 INTEROFFICE TRANSPORT (EEL)																
		First 4-Wire 64Kbps Digital Grade Loop/DS1 Interoffice Transport Combination - Statewide		sw	UNCDX	UDL64	37.67	489.04	337.51					38.07	38.07		
		Interoffice Transport - Dedicated - DS1 combination - Per Mile Per Month			UNC1X	1L5XX	0.5753										
		Interoffice Transport - Dedicated - DS1 combination - Facility Termination Per Month			UNC1X	U1TF1	71.29	217.17	163.75					38.07	38.07		
		Channelization - Channel System DS1 to DS0 combination Per Month			UNC1X	MQ1	146.69	197.78	140.06					38.07	38.07		
		OCU-DP COCI (data) - DS1 to DS0 Channel System combination - per month (2.4-64kbs)			UNCDX	1D1DD	2.00	15.76	11.28					38.07	38.07		
		Additional 4-Wire 64Kbps Digital Grade Loopin same DS1 Interoffice Transport Combination - Statewide		sw	UNCDX	UDL64	37.67	489.04	337.51					38.07	38.07		
		OCU-DP COCI (data) - DS1 to DS0 Channel System combination - per month (2.4-64kbs)			UNCDX	1D1DD	2.00	15.76	11.28					38.07	38.07		
		Nonrecurring Currently Combined Network Elements Switch -As-Is Charge			UNC1X	UNCCC		21.75	21.75	32.28	10.96			38.07	38.07		
	4-WIRE DS1 DIGITAL EXTENDED LOOP WITH DEDICATED DS1 INTEROFFICE TRANSPORT (EEL)																
		4-Wire DS1 Digital Loop in Combination with DS1 Interoffice Transport - Statewide		sw	UNC1X	USLXX	62.78	714.84	421.47					38.07	38.07		

CATEGORY	RATE ELEMENTS	Interim	Zone	BCS	USOC	RATES($) Rec	Nonrecurring First	Nonrecurring Add'l	Nonrecurring Disconnect First	Nonrecurring Disconnect Add'l	Svc Order Submitted Elec per LSR	Svc Order Submitted Manually per LSR	Incremental Charge - Manual Svc Order vs. Electronic-1st	Incremental Charge - Manual Svc Order vs. Electronic-Add'l	Incremental Charge - Manual Svc Order vs. Electronic-Disc 1st	Incremental Charge - Manual Svc Order vs. Electronic-Disc Add'l
											OSS Rates($)					
											SOMEC	SOMAN	SOMAN	SOMAN	SOMAN	SOMAN
	Interoffice Transport - Dedicated - DS1 combination - Per Mile Per Month			UNC1X	1L5XX	0.5753										
	Interoffice Transport - Dedicated - DS1 combination - Facility Termination Per Month			UNC1X	U1TF1	71.29	217.17	163.75					38.07	38.07		
	Nonrecurring Currently Combined Network Elements Switch -As-Is Charge			UNC1X	UNCCC		21.75	21.75	32.28	10.96			38.07	38.07		
4-WIRE DS1 DIGITAL EXTENDED LOOP WITH DEDICATED DS3 INTEROFFICE TRANSPORT (EEL)																
	First DS1Loop in DS3 Interoffice Transport Combination - Statewide		sw	UNC1X	USLXX	62.78	714.84	421.47					38.07	38.07		
	Interoffice Transport - Dedicated - DS3 combination - Per Mile Per Month			UNC3X	1L5XX	12.98										
	Interoffice Transport - Dedicated - DS3 - Facility Termination per month			UNC3X	U1TF3	720.38	794.94	579.55					38.07	38.07		
	DS3 to DS1 Channel System combination per month			UNC3X	MQ3	233.10	403.97	234.40					38.07	38.07		
	DS3 Interface Unit (DS1 COCI) combination per month			UNC1X	UC1D1	16.07	13.09	9.38					38.07	38.07		
	Additional DS1Loop in DS3 Interoffice Transport Combination - Statewide		sw	UNC1X	USLXX	62.78	714.84	421.47					38.07	38.07		
	DS3 Interface Unit (DS1 COCI) combination per month			UNC1X	UC1D1	16.07	13.09	9.38					38.07	38.07		
	Nonrecurring Currently Combined Network Elements Switch -As-Is Charge			UNC3X	UNCCC		21.75	21.75	32.28	10.96			38.07	38.07		
2-WIRE VOICE GRADE EXTENDED LOOP/ 2 WIRE VOICE GRADE INTEROFFICE TRANSPORT (EEL)																
	2-WireVG Loop used with 2-wire VG Interoffice Transport Combination - Statewide		sw	UNCVX	UEAL2	19.50	142.97	106.56					38.07	38.07		
	Interoffice Transport - Dedicated - 2-wire VG combination - Per Mile Per Month			UNCVX	1L5XX	0.0282										
	Interoffice Transport - Dedicated - 2- Wire Voice Grade combination - Facility Termination per month			UNCVX	U1TV2	18.00	137.48	52.58					38.07	38.07		
	Nonrecurring Currently Combined Network Elements Switch -As-Is Charge			UNCVX	UNCCC		21.75	21.75	32.28	10.96			38.07	38.07		
4-WIRE VOICE GRADE EXTENDED LOOP/ 4 WIRE VOICE GRADE INTEROFFICE TRANSPORT (EEL)																
	4-WireVG Loop used with 4-wire VG Interoffice Transport Combination - Statewide		sw	UNCVX	UEAL4	27.49	288.47	237.45					38.07	38.07		
	Interoffice Transport - Dedicated - 4-wire VG combination - Per Mile Per Month			UNCVX	1L5XX	0.0282										
	Interoffice Transport - Dedicated - 4- Wire Voice Grade combination - Facility Termination per month			UNCVX	U1TV4	22.16	106.11	65.95					38.07	38.07		
	Nonrecurring Currently Combined Network Elements Switch -As-Is Charge			UNCVX	UNCCC		21.75	21.75	32.28	10.96			38.07	38.07		
DS3 DIGITAL EXTENDED LOOP WITH DEDICATED DS3 INTEROFFICE TRANSPORT (EEL)																
	High Capacity Unbundled Local Loop - DS3 combination - Per Mile per month			UNC3X	1L5ND	11.12										
	High Capacity Unbundled Local Loop - DS3 combination - Facility Termination per month			UNC3X	UE3PX	404.98	1,071.00	646.12					38.07	38.07		
	Interoffice Transport - Dedicated - DS3 - Per Mile per month			UNC3X	1L5XX	12.98										
	Interoffice Transport - Dedicated - DS3 combination - Facility Termination per per month			UNC3X	U1TF3	720.38	794.94	579.55					38.07	38.07		
	Nonrecurring Currently Combined Network Elements Switch -As-Is Charge			UNC3X	UNCCC		21.75	21.75	32.28	10.96			38.07	38.07		
STS1 DIGITAL EXTENDED LOOP WITH DEDICATED STS1 INTEROFFICE TRANSPORT (EEL)																
	High Capacity Unbundled Local Loop - STS1 combination - Per Mile per month			UNCSX	1L5ND	11.12										
	High Capacity Unbundled Local Loop - STS1 combination - Facility Termination per month			UNCSX	UDLS1	417.70	1,071.00	646.12					38.07	38.07		
	Interoffice Transport - Dedicated - STS1 combination - Per Mile per month			UNCSX	1L5XX	6.14										
	Interoffice Transport - Dedicated - STS1 combination - Facility Termination per month			UNCSX	U1TFS	790.37	794.94	679.55					38.07	38.07		
	Nonrecurring Currently Combined Network Elements Switch -As-Is Charge			UNCSX	UNCCC		21.75	21.75	32.28	10.96			38.07	38.07		

UNBUNDLED NETWORK ELEMENTS - North Carolina														Attachment: 2		Exhibit: B	
CATEGORY		RATE ELEMENTS	Interim	Zone	BCS	USOC	RATES($)					Svc Order Submitted Elec per LSR	Svc Order Submitted Manually per LSR	Incremental Charge - Manual Svc Order vs. Electronic-1st	Incremental Charge - Manual Svc Order vs. Electronic-Add'l	Incremental Charge - Manual Svc Order vs. Electronic-Disc 1st	Incremental Charge - Manual Svc Order vs. Electronic-Disc Add'l
							Rec	Nonrecurring		Nonrecurring Disconnect		OSS Rates($)					
								First	Add'l	First	Add'l	SOMEC	SOMAN	SOMAN	SOMAN	SOMAN	SOMAN
	2-WIRE ISDN EXTENDED LOOP WITH DS1 INTEROFFICE TRANSPORT (EEL)																
		First 2-Wire ISDN Loop/DS1 Interoffice Combination Transport - Statewide		sw	UNCNX	U1L2X	24.98	325.91	251.31					38.07	38.07		
		Interoffice Transport - Dedicated - DS1 combination - Per Mile			UNC1X	1L5XX	0.5753										
		Interoffice Transport - Dedicated - DS1 combintion - Facility Termination per month			UNC1X	U1TF1	71.29	217.17	163.75					38.07	38.07		
		Channelization - Channel System DS1 to DS0 combination - per month			UNC1X	MQ1	146.69	197.78	140.06					38.07	38.07		
		2-wire ISDN COCI (BRITE) - DS1 to DS0 Channel System combination - per month			UNCNX	UC1CA	3.59	15.76	11.28					38.07	38.07		
		Additional 2-wire ISDN Loop in same DS1Interoffice Transport Combination - Statewide		sw	UNCNX	U1L2X	24.98	325.91	251.31					38.07	38.07		
		2-wire ISDN COCI (BRITE) - DS1 to DS0 Channel System combintaion- per month			UNCNX	UC1CA	3.59	15.76	11.28					38.07	38.07		
		Nonrecurring Currently Combined Network Elements Switch -As-Is Charge			UNC1X	UNCCC		21.75	21.75	32.28	10.96			38.07	38.07		
	4-WIRE DS1 DIGITAL EXTENDED LOOP WITH DEDICATED STS-1 INTEROFFICE TRANSPORT (EEL)																
		First DS1 Loop in STS1 Interoffice Transport Combination - Statewide		sw	UNCIX	USLXX	62.78	714.84	421.47					38.07	38.07		
		Interoffice Transport - Dedicated - STS1 combination - Per Mile Per Month			UNCSX	1L5XX	6.14										
		Interoffice Transport - Dedicated - STS1 combination - Facility Termination			UNCSX	U1TFS	790.37	794.94	679.55					38.07	38.07		
		STS1 to DS1 Channel System conbination per month			UNCSX	MQ3	233.10	403.90	234.40					38.07	38.07		
		DS3 Interface Unit (DS1 COCI) combination per month			UNC1X	UC1D1	16.07	13.09	9.38					38.07	38.07		
		Additional DS1Loop in STS1 Interoffice Transport Combination - Statewide		sw	UNC1X	USLXX	62.78	714.84	421.47					38.07	38.07		
		DS3 Interface Unit (DS1 COCI) combination per month			UNC1X	UC1D1	16.07	13.09	9.38					38.07	38.07		
		Nonrecurring Currently Combined Network Elements Switch -As-Is Charge			UNCSX	UNCCC		21.75	21.75	32.28	10.96			38.07	38.07		
	4-WIRE 56 KBPS DIGITAL EXTENDED LOOP WITH 56 KBPS INTEROFFICE TRANSPORT (EEL)																
		4-wire 56 kbps Loop/4-wire 56 kbps Interoffice Transport Combination - Statewide		sw	UNCDX	UDL56	37.67	489.04	337.51					38.07	38.07		
		Interoffice Transport - Dedicated - 4-wire 56 kbps combination - Per Mile			UNCDX	1L5XX	0.0282										
		Interoffice Transport - Dedicated - 4-wire 56 kbps combination - Facility Termination			UNCDX	U1TD5	17.40	137.48	52.58					38.07	38.07		
		Nonrecurring Currently Combined Network Elements Switch -As-Is Charge			UNCDX	UNCCC		21.75	21.75	32.28	10.96			38.07	38.07		
	4-WIRE 64 KBPS DIGITAL EXTENDED LOOP WITH 64 KBPS INTEROFFICE TRANSPORT (EEL)																
		4-wire 64 kbps Loop/4-wire 64 kbps Interoffice Transport Combination - Statewide		sw	UNCDX	UDL64	37.67	489.04	337.51					38.07	38.07		
		Interoffice Transport - Dedicated - 4-wire 64 kbps combination - Per Mile			UNCDX	1L5XX	0.0282										
		Interoffice Transport - Dedicated - 4-wire 64 kbps combination - Facility Termination			UNCDX	U1TD6	17.40	137.48	52.58					38.07	38.07		
		Nonrecurring Currently Combined Network Elements Switch -As-Is Charge			UNCDX	UNCCC		21.75	21.75	32.28	10.96			38.07	38.07		
ADDITIONAL NETWORK ELEMENTS																	
	When used as a part of a currently combined facility, the non-recurrng charges do not apply, but a Switch As Is charge does apply.																
	Node (SynchroNet)																
	Nonrecurring Currently Combined Network Elements "Switch As Is" Charge (One applies to each combination)																
		Nonrecurring Currently Combined Network Elements Switch -As-Is Charge - 2 wire/4-Wire VG			UNCVX	UNCCC		21.75	21.75	32.28	10.96			38.07	38.07		
		Nonrecurring Currently Combined Network Elements Switch -As-Is Charge - 56/64 kbps			UNCDX	UNCCC		21.75	21.75	32.28	10.96			38.07	38.07		
		Nonrecurring Currently Combined Network Elements Switch -As-Is Charge - DS1			UNC1X	UNCCC		21.75	21.75	32.28	10.96			38.07	38.07		

CATEGORY	RATE ELEMENTS	Interim	Zone	BCS	USOC	RATES($) Rec	Nonrecurring First	Nonrecurring Add'l	Nonrecurring Disconnect First	Nonrecurring Disconnect Add'l	Svc Order Submitted Elec per LSR	Svc Order Submitted Manually per LSR	Incremental Charge - Manual Svc Order vs. Electronic-1st	Incremental Charge - Manual Svc Order vs. Electronic-Add'l	Incremental Charge - Manual Svc Order vs. Electronic-Disc 1st	Incremental Charge - Manual Svc Order vs. Electronic-Disc Add'l
											OSS Rates($)					
											SOMEC	SOMAN	SOMAN	SOMAN	SOMAN	SOMAN
	Nonrecurring Currently Combined Network Elements Switch -As-Is Charge - DS3			UNC3X	UNCCC		21.75	21.75	32.28	10.96			38.07	38.07		
	Nonrecurring Currently Combined Network Elements Switch -As-Is Charge - STS1			UNCSX	UNCCC		21.75	21.75	32.28	10.96			38.07	38.07		
	NOTE: Local Channel - Dedicated Transport - minimum billing period - Below DS3=one month, DS3 and above=four months															
UNBUNDLED LOCAL EXCHANGE SWITCHING(PORTS)																
Exchange Ports																
NOTE: Although the Port Rate includes all available features in GA, KY, LA & TN, the desired features will need to be ordered using retail USOCs																
2-WIRE VOICE GRADE LINE PORT RATES (RES)																
	Exchange Ports - 2-Wire Analog Line Port- Res.			UEPSR	UEPRL	2.19	21.60	21.60					26.94	12.76		
	Exchange Ports - 2-Wire Analog Line Port with Caller ID - Res.			UEPSR	UEPRC	2.19	21.60	21.60					26.94	12.76		
	Exchange Ports - 2-Wire Analog Line Port outgoing only - Res.			UEPSR	UEPRO	2.19	21.60	21.60					26.94	12.76		
	Exchange Ports - 2-Wire VG unbundled res, low usage line port with Caller ID (LUM)			UEPSR	UEPAP	2.19	21.60	21.60					26.94	12.76		
	Subsequent Activity			UEPSR	USASC	0.00	0.00	0.00					26.94	12.76		
FEATURES																
	All Available Vertical Features			UEPSR	UEPVF	3.40	0.00	0.00					26.94	12.76		
2-WIRE VOICE GRADE LINE PORT RATES (BUS)																
	Exchange Ports - 2-Wire Analog Line Port without Caller ID - Bus			UEPSB	UEPBL	2.19	21.60	21.60					26.94	12.76		
	Exchange Ports - 2-Wire VG unbundled Line Port with unbundled port with Caller+E484 ID - Bus.			UEPSB	UEPBC	2.19	21.60	21.60					26.94	12.76		
	Exchange Ports - 2-Wire Analog Line Port outgoing only - Bus.			UEPSB	UEPBO	2.19	21.60	21.60					26.94	12.76		
	Exhange Ports - 2-Wire VG unbundled incoming only port with Caller ID - Bus			UEPSB	UEPB1	2.19	21.60	21.60					26.94	12.76		
	Subsequent Activity			UEPSB	USASC	0.00	0.00	0.00								
FEATURES																
	All Available Vertical Features			UEPSB	UEPVF	3.40	0.00	0.00					26.94	12.76		
EXCHANGE PORT RATES (DID & PBX)																
	2-Wire VG Unbundled 2-Way PBX Trunk - Res			UEPSE	UEPRD	2.18	21.60	21.60					26.94	12.76		
	2-Wire VG Line Side Unbundled 2-Way PBX Trunk - Bus			UEPSP	UEPPC	2.18	21.60	21.60					26.94	12.76		
	2-Wire VG Line Side Unbundled Outward PBX Trunk - Bus			UEPSP	UEPPO	2.18	21.60	21.60					26.94	12.76		
	2-Wire VG Line Side Unbundled Incoming PBX Trunk - Bus			UEPSP	UEPP1	2.18	21.60	21.60					26.94	12.76		
	2-Wire Analog Long Distance Terminal PBX Trunk - Bus			UEPSP	UEPLD	2.18	21.60	21.60					26.94	12.76		
	2-Wire Voice Unbundled PBX LD Terminal Ports			UEPSP	UEPLD	2.18	21.60	21.60					26.94	12.76		
	2-Wire Vice Unbundled 2-Way PBX Usage Port			UEPSP	UEPXA	2.18	21.60	21.60					26.94	12.76		
	2-Wire Voice Unbundled PBX Toll Terminal Hotel Ports			UEPSP	UEPXB	2.18	21.60	21.60					26.94	12.76		
	2-Wire Voice Unbundled PBX LD DDD Terminals Port			UEPSP	UEPXC	2.18	21.60	21.60					26.94	12.76		
	2-Wire Voice Unbundled PBX LD Terminal Switchboard Port			UEPSP	UEPXD	2.18	21.60	21.60					26.94	12.76		
	2-Wire Voice Unbundled PBX LD Terminal Switchboard IDD Capable Port			UEPSP	UEPXE	2.18	21.60	21.60					26.94	12.76		
	2-Wire Voice Unbundled 2-Way PBX Hotel/Hospital Economy Administrative Calling Port			UEPSP	UEPXL	2.18	21.60	21.60					26.94	12.76		
	2-Wire Voice Unbundled 2-Way PBX Hotel/Hospital Economy Room Calling Port			UEPSP	UEPXM	2.18	21.60	21.60					26.94	12.76		
	2-Wire Voice Unbundled 1-Way Outgoing PBX Hotel/Hospital Discount Room Calling Port			UEPSP	UEPXO	2.18	21.60	21.60					26.94	12.76		
	2-Wire Voice Unbundled 1-Way Outgoing PBX Measured Port			UEPSP	UEPXS	2.18	21.60	21.60					26.94	12.76		
	Subsequent Activity			UEPSP	USASC	0.00	0.00	0.00					26.94	12.76		
FEATURES																
	All Available Vertical Features			UEPSP UEPSE	UEPVF	3.40	0.00	0.00					26.94	12.76		
EXCHANGE PORT RATES (COIN)																
	Exchange Ports - Coin Port					2.59	21.60	21.60					26.94	12.76		
	NOTE: Transmission/usage charges associated with POTS circuit switched usage will also apply to circuit switched voice and/or circuit switched data transmission by B-Channels associated with 2-wire ISDN ports.															
	NOTE: Access to B Channel or D Channel Packet capabilities will be available only through BFR/New Business Request Process. Rates for the packet capabilities will be determined via the Bona Fide Request/New Business Request Process.															
UNBUNDLED LOCAL EXCHANGE SWITCHING(PORTS)																

UNBUNDLED NETWORK ELEMENTS - North Carolina

Attachment: 2 | Exhibit: B

CATEGORY	RATE ELEMENTS	Interim	Zone	BCS	USOC	RATES($) Rec	Nonrecurring First	Nonrecurring Add'l	Nonrecurring Disconnect First	Nonrecurring Disconnect Add'l	Svc Order Submitted Elec per LSR	Svc Order Submitted Manually per LSR	Incremental Charge - Manual Svc Order vs. Electronic-1st	Incremental Charge - Manual Svc Order vs. Electronic-Add'l	Incremental Charge - Manual Svc Order vs. Electronic-Disc 1st	Incremental Charge - Manual Svc Order vs. Electronic-Disc Add'l
											OSS Rates($)					
											SOMEC	SOMAN	SOMAN	SOMAN	SOMAN	SOMAN
	EXCHANGE PORT RATES (DID & PBX)															
	Exchange Ports - 2-Wire DID Port			UEPEX	UEPP2	12.36	108.78	84.60					26.94	12.76		
	Exchange Ports - DDITS Port - 4-Wire DS1 Port with DID capability			UEPDD	UEPDD	123.65	143.53	82.68					19.99	19.99	19.99	19.99
	Exchange Ports - 2-Wire ISDN Port (See Notes below.)			UEPTX UEPSX	U1PMA	24.50	117.59	117.59					55.30	55.30		
	All Features Offered			UEPTX UEPSX	UEPVF	3.40	0.00	0.00								
	NOTE: Transmission/usage charges associated with POTS circuit switched usage will also apply to circuit switched voice and/or circuit switched data transmission by B-Channels associated with 2-wire ISDN ports.															
	NOTE: Access to B Channel or D Channel Packet capabilities will be available only through BFR/New Business Request Process. Rates for the packet capabilities will be determined via the Bona Fide Request/New Business Request Process.															
	Exchange Ports - 2-Wire ISDN Port -- Channel Profiles			UEPTX UEPSX	U1UMA	0.00	0.00	0.00								
	Exchange Ports - 4-Wire ISDN DS1 Port			UEPEX	UEPEX	179.75	241.63	241.63					53.89	53.89		
UNBUNDLED LOCAL SWITCHING, PORT USAGE																
	End Office Switching (Port Usage)															
	End Office Switching Function, Per MOU					0.0015										
	End Office Trunk Port - Shared, Per MOU					0.00023										
	Tandem Switching (Port Usage) (Local or Access Tandem)															
	Tandem Switching Function Per MOU					0.0006										
	Tandem Trunk Port - Shared, Per MOU					0.0003										
	Common Transport															
	Common Transport - Per Mile, Per MOU					0.00001										
	Common Transport - Facilities Termination Per MOU					0.00034										
UNBUNDLED PORT/LOOP COMBINATIONS - COST BASED RATES																
	Cost Based Rates are applied where BellSouth is required by FCC and/or State Commission rule to provide Unbundled Local Switching or Switch Ports.															
	Features shall apply to the Unbundled Port/Loop Combination - Cost Based Rate section in the same manner as they are applied to the Stand-Alone Unbundled Port section of this Rate Exhibit.															
	End Office and Tandem Switching Usage and Common Transport Usage rates in the Port section of this rate exhibit shall apply to all combinations of loop/port network elements except for UNE Coin Port/Loop Combinations.															
	For Georgia, Kentucky, Louisiana, MIssissippi, South Carolina and Tennessee, the recurring UNE Port and Loop charges listed apply to Currently Combined and Not Currently Combined Combos. The first and additional Port nonrecurring charges apply to Not Currently Combined Combos for all states. In GA, KY, LA, MS, SC and TN these nonrecurring charges are commission ordered cost based rates and in AL, FL and NC these nonrecurring charges are Market Rates and are also listed in the Market Rate section. For Currently Combined Combos in all other states, the nonrecurring charges shall be those identified in the Nonrecurring - Currently Combined sections.															
	2-WIRE VOICE GRADE LOOP WITH 2-WIRE LINE PORT (RES)															
	UNE Port/Loop Combination Rates															
	2-Wire VG Loop/Port Combo - Statewide		sw			16.46										
	UNE Loop Rates															
	2-Wire Voice Grade Loop (SL1) - Statewide		sw	UEPRX	UEPLX	14.18										
	2-Wire Voice Grade Line Port Rates (Res)															
	2-Wire voice unbundled port - residence			UEPRX	UEPRL	2.28	90.00	90.00					40.18	9.45		
	2-Wire voice unbundled port with Caller ID - res			UEPRX	UEPRC	2.28	90.00	90.00					40.18	9.45		
	2-Wire voice unbundled port outgoing only - res			UEPRX	UEPRO	2.28	90.00	90.00					40.18	9.45		
	2-Wire voice unbundles res, low usage line port with Caller ID (LUM)			UEPRX	UEPAP	2.28	90.00	90.00					40.18	9.45		
	FEATURES															
	All Features Offered			UEPRX	UEPVF	3.40	0.00	0.00					40.18	9.45		
	LOCAL NUMBER PORTABILITY															
	Local Number Portability (1 per port)			UEPRX	LNPCX	0.35										
	NONRECURRING CHARGES (NRCs) - CURRENTLY COMBINED															
	2-Wire Voice Grade Loop / Line Port Combination - Conversion - Switch-as-is			UEPRX	USAC2		2.77	0.40					40.18	9.45		
	2-Wire Voice Grade Loop / Line Port Combination - Conversion - Switch with change			UEPRX	USACC		2.77	0.40					40.18	9.45		
	2-Wire Voice Grade Loop / Line Port Combination - Conversion - Subsequent Database Update						1.42						10.27			
	ADDITIONAL NRCs															
	2-Wire Voice Grade Loop/Line Port Combination - Subsequent Activity			UEPRX	USAS2	0.00	0.00	0.00					40.18	9.45		
	2-WIRE VOICE GRADE LOOP WITH 2-WIRE LINE PORT (BUS)															
	UNE Port/Loop Combination Rates															
	2-Wire VG Loop/Port Combo - Statewide		sw			16.46										
	UNE Loop Rates															
	2-Wire Voice Grade Loop (SL1) - Statewide		sw	UEPBX	UEPLX	14.18										
	2-Wire Voice Grade Line Port (Bus)															
	2-Wire voice unbundled port without Caller ID - bus			UEPBX	UEPBL	2.28	90.00	90.00					40.18	9.45		

UNBUNDLED NETWORK ELEMENTS - North Carolina													Attachment: 2		Exhibit: B	
CATEGORY	RATE ELEMENTS	Interim	Zone	BCS	USOC	RATES($)					Svc Order Submitted Elec per LSR	Svc Order Submitted Manually per LSR	Incremental Charge - Manual Svc Order vs. Electronic-1st	Incremental Charge - Manual Svc Order vs. Electronic-Add'l	Incremental Charge - Manual Svc Order vs. Electronic-Disc 1st	Incremental Charge - Manual Svc Order vs. Electronic-Disc Add'l
						Rec	Nonrecurring		Nonrecurring Disconnect		OSS Rates($)					
							First	Add'l	First	Add'l	SOMEC	SOMAN	SOMAN	SOMAN	SOMAN	SOMAN
	2-Wire voice unbundled port with Caller + E484 ID - bus			UEPBX	UEPBC	2.28	90.00	90.00					40.18	9.45		
	2-Wire voice unbundled port outgoing only - bus			UEPBX	UEPBO	2.28	90.00	90.00					40.18	9.45		
	2-Wire voice unbundled incoming only port with Caller ID - Bus			UEPBX	UPEB1	2.28	90.00	90.00					40.18	9.45		
LOCAL NUMBER PORTABILITY																
	Local Number Portability (1 per port)			UEPBX	LNPCX	0.35										
FEATURES																
	All Features Offered			UEPBX	UEPVF	3.40	0.00	0.00					40.18	9.45		
NONRECURRING CHARGES (NRCs) - CURRENTLY COMBINED																
	2-Wire Voice Grade Loop / Line Port Combination - Conversion - Switch-as-is			UEPBX	USAC2		2.77	0.40					40.18	9.45		
	2-Wire Voice Grade Loop / Line Port Combination - Conversion - Switch with change			UEPBX	USACC		2.77	0.40					40.18	9.45		
	2-Wire Voice Grade Loop / Line Port Combination - Conversion - Subsequent Database Update						1.42						10.27			
ADDITIONAL NRCs																
	2-Wire Voice Grade Loop/Line Port Combination - Subsequent Activity			UEPBX	USAS2		0.00	0.00					40.18	9.45		
2-WIRE VOICE GRADE LOOP WITH 2-WIRE LINE PORT (RES - PBX)																
UNE Port/Loop Combination Rates																
	2-Wire VG Loop/Port Combo - Statewide		sw			16.46										
UNE Loop Rates																
	2-Wire Voice Grade Loop (SL 1) - Statewide		sw	UEPRG	UEPLX	14.18										
2-Wire Voice Grade Line Port Rates (RES - PBX)																
	2-Wire VG Unbundled Combination 2-Way PBX Trunk Port - Res			UEPRG	UEPRD	2.28	90.00	90.00					40.18	9.45		
LOCAL NUMBER PORTABILITY																
	Local Number Portability (1 per port)			UEPRG	LNPCP	3.15	0.00	0.00								
FEATURES																
	All Features Offered			UEPRG	UEPVF	3.40	0.00	0.00					40.18	9.45		
NONRECURRING CHARGES (NRCs) - CURRENTLY COMBINED																
	2-Wire Voice Grade Loop/ Line Port Combination (PBX) - Conversion - Switch-As-Is			UEPRG	USAC2		2.77	0.40					40.18	9.45		
	2-Wire Voice Grade Loop/ Line Port Combination (PBX) - Conversion - Switch with Change			UEPRG	USACC		2.77	0.40					40.18	9.45		
	2-Wire Voice Grade Loop / Line Port Combination - Conversion - Subsequent Database Update						1.42						10.27			
ADDITIONAL NRCs																
	2-Wire Voice Grade Loop/ Line Port Combination (PBX) - Subsequent Activity			UEPRG	USAS2	0.00	0.00	0.00					40.18	9.45		
	PBX Subsequent Activity - Change/Rearrange Multiline Hunt Group						14.64	14.64					40.18	9.45		
2-WIRE VOICE GRADE LOOP WITH 2-WIRE LINE PORT (BUS - PBX)																
UNE Port/Loop Combination Rates																
	2-Wire VG Loop/Port Combo - Statewide		sw			16.46										
UNE Loop Rates																
	2-Wire Voice Grade Loop (SL 1) - Statewide		sw	UEPPX	UEPLX	14.18										
2-Wire Voice Grade Line Port Rates (BUS - PBX)																
	Line Side Unbundled Combination 2-Way PBX Trunk Port - Bus			UEPPX	UEPPC	2.28	90.00	90.00					40.18	9.45		
	Line Side Unbundled Outward PBX Trunk Port - Bus			UEPPX	UEPPO	2.28	90.00	90.00					40.18	9.45		
	Line Side Unbundled Incoming PBX Trunk Port - Bus			UEPPX	UEPP1	2.28	90.00	90.00					40.18	9.45		
	2-Wire Voice Unbundled PBX LD Terminal Ports			UEPPX	UEPLD	2.28	90.00	90.00					40.18	9.45		
	2-Wire Voice Unbundled 2-Way Combination PBX Usage Port			UEPPX	UEPXA	2.28	90.00	90.00					40.18	9.45		
	2-Wire Voice Unbundled PBX Toll Terminal Hotel Ports			UEPPX	UEPXB	2.28	90.00	90.00					40.18	9.45		
	2-Wire Voice Unbundled PBX LD DDD Terminals Port			UEPPX	UEPXC	2.28	90.00	90.00					40.18	9.45		
	2-Wire Voice Unbundled PBX LD Terminal Switchboard Port			UEPPX	UEPXD	2.28	90.00	90.00					40.18	9.45		
	2-Wire Voice Unbundled PBX LD Terminal Switchboard IDD Capable Port			UEPPX	UEPXE	2.28	90.00	90.00					40.18	9.45		

CATEGORY	RATE ELEMENTS	Interim	Zone	BCS	USOC	RATES($) Rec	Nonrecurring First	Nonrecurring Add'l	Nonrecurring Disconnect First	Nonrecurring Disconnect Add'l	Svc Order Submitted Elec per LSR	Svc Order Submitted Manually per LSR	Incremental Charge - Manual Svc Order vs. Electronic-1st	Incremental Charge - Manual Svc Order vs. Electronic-Add'l	Incremental Charge - Manual Svc Order vs. Electronic-Disc 1st	Incremental Charge - Manual Svc Order vs. Electronic-Disc Add'l
											OSS Rates($)					
											SOMEC	SOMAN	SOMAN	SOMAN	SOMAN	SOMAN
	2-Wire Voice Unbundled 2-Way PBX Hotel/Hospital Economy Administrative Calling Port			UEPPX	UEPXL	2.28	90.00	90.00					40.18	9.45		
	2-Wire Voice Unbundled 2-Way PBX Hotel/Hospital Economy Room Calling Port			UEPPX	UEPXM	2.28	90.00	90.00					40.18	9.45		
	2-Wire Voice Unbundled 1-Way Outgoing PBX Hotel/Hospital Discount Room Calling Port			UEPPX	UEPXO	2.28	90.00	90.00					40.18	9.45		
	2-Wire Voice Unbundled 1-Way Outgoing PBX Measured Port			UEPPX	UEPXS	2.28	90.00	90.00					40.18	9.45		
LOCAL NUMBER PORTABILITY																
	Local Number Portability (1 per port)			UEPPX	LNPCP	3.15	0.00	0.00					40.18	9.45		
FEATURES																
	All Features Offered			UEPPX	UEPVF	3.40	0.00	0.00					40.18	9.45		
NONRECURRING CHARGES (NRCs) - CURRENTLY COMBINED																
	2-Wire Voice Grade Loop/ Line Port Combination (PBX) - Conversion - Switch-As-Is			UEPPX	USAC2		2.77	0.40					40.18	9.45		
	2-Wire Voice Grade Loop/ Line Port Combination (PBX) - Conversion - Switch with Change			UEPPX	USACC		2.77	0.40					40.18	9.45		
	2-Wire Voice Grade Loop / Line Port Combination - Conversion - Subsequent Database Update						1.42						10.27			
ADDITIONAL NRCs																
	2-Wire Voice Grade Loop/ Line Port Combination (PBX) - Subsequent Activity			UEPPX	USAS2	0.00	0.00	0.00					40.18	9.45		
	PBX Subsequent Activity - Change/Rearrange Multiline Hunt Group						14.64	14.64					40.18	9.45		
2-WIRE VOICE GRADE LOOP WITH 2-WIRE ANALOG LINE COIN PORT																
UNE Port/Loop Combination Rates																
	2-Wire VG Coin Port/Loop Combo – Statewide		sw			16.80										
UNE Loop Rates																
	2-Wire Voice Grade Loop (SL1) - Statewide		sw	UEPCO	UEPLX	14.18										
2-Wire Voice Grade Line Ports (COIN)																
	2-Wire Coin 2-Way without Operator Screening and without Blocking (NC)			UEPCO	UEPND	2.62	90.00	90.00					40.18	9.45		
	2-Wire Coin 2-Way with Operator Screening (NC)			UEPCO	UEPNC	2.62	90.00	90.00					40.18	9.45		
	2-Wire Coin 2-Way with Operator Screening and Blocking: 011, 900/976, 1+DDD (NC, TN)			UEPCO	UEPRP	2.62	90.00	90.00					40.18	9.45		
	2-Wire Coin 2-Way with Operator Screening and 011 Blocking (NC)			UEPCO	UEPNB	2.62	90.00	90.00					40.18	9.45		
	2-Wire Coin 2-Way with Operator Screening: 900 Blocking: 900/976, 1+DDD, 011+, and Local (NC, TN)			UEPCO	UEPCA	2.62	90.00	90.00					40.18	9.45		
	2-Wire Coin Outward with Operator Screening and 011 Blocking (NC)			UEPCO	UEPNE	2.62	90.00	90.00					40.18	9.45		
	2-Wire Coin Outward with Operator Screening and Blocking: 900/976, 1+DDD, 011+, and Local (NC)			UEPCO	UEPCL	2.62	90.00	90.00					40.18	9.45		
	2-Wire 2-Way Smartline with 900/976 (all states except LA)			UEPCO	UEPCK	2.62	90.00	90.00					40.18	9.45		
	2-Wire Coin Outward Smartline with 900/976 (all states except LA)			UEPCO	UEPCR	2.62	90.00	90.00					40.18	9.45		
ADDITIONAL UNE COIN PORT/LOOP (RC)																
	UNE Coin Port/Loop Combo Usage (Flat Rate)			UEPCO	URECU	3.70	90.00	90.00					40.18	9.45		
LOCAL NUMBER PORTABILITY																
	Local Number Portability (1 per port)			UEPCO	LNPCX	0.35										
NONRECURRING CHARGES - CURRENTLY COMBINED																
	2-Wire Voice Grade Loop / Line Port Combination - Conversion - Switch-as-is			UEPCO	USAC2		2.77	0.40					40.18	9.45		
	2-Wire Voice Grade Loop / Line Port Combination - Conversion - Switch with change			UEPCO	USACC		2.77	0.40					40.18	9.45		
ADDITIONAL NRCs																
	2-Wire Voice Grade Loop/Line Port Combination - Subsequent Activity			UEPCO	USAS2		0.00	0.00					40.18	9.45		
UNBUNDLED REMOTE CALL FORWARDING - RES																
Non-Recurring																

CATEGORY	RATE ELEMENTS	Interim	Zone	BCS	USOC	RATES($) Rec	Nonrecurring First	Nonrecurring Add'l	Nonrecurring Disconnect First	Nonrecurring Disconnect Add'l	Svc Order Submitted Elec per LSR	Svc Order Submitted Manually per LSR	Incremental Charge - Manual Svc Order vs. Electronic- 1st	Incremental Charge - Manual Svc Order vs. Electronic- Add'l	Incremental Charge - Manual Svc Order vs. Electronic- Disc 1st	Incremental Charge - Manual Svc Order vs. Electronic- Disc Add'l
											OSS Rates($)					
											SOMEC	SOMAN	SOMAN	SOMAN	SOMAN	SOMAN
	UNBUNDLED REMOTE CALL FORWARDING - Bus															
	Unbundled Remote Call Forwarding, InterState/Intra LATA-Bus			UEPVB	UEPVJ	2.19	21.60	21.60					26.94	12.76		
	Non-Recurring															
	2-WIRE VOICE LOOP/ 2WIRE VOICE GRADE IO TRANSPORT/ 2-WIRE LINE PORT (RES)															
	2-WIRE VOICE LOOP/ 2WIRE VOICE GRADE IO TRANSPORT/ 2-WIRE LINE PORT (BUS)															
	2-Wire voice unbundled port with Caller + E484 ID - bus			UEPFB	UEPBC	2.19	225.00	225.00					40.18	9.45		
UNBUNDLED PORT/LOOP COMBINATIONS - COST BASED RATES																
	2-WIRE VOICE GRADE LOOP- BUS ONLY - WITH 2-WIRE DID TRUNK PORT															
	UNE Port/Loop Combination Rates															
	2-Wire VG Loop/2-Wire DID Trunk Port Combo - Statewide		sw			31.07										
	UNE Loop Rates															
	2-Wire Analog Voice Grade Loop - (SL2) - Statewide		sw			19.50	142.97	106.56					40.18	9.45		
	UNE Port Rate															
	Exchange Ports - 2-Wire DID Port			UEPPX	UEPD1	12.36	485.00	75.00					40.18	9.45		
	NONRECURRING CHARGES - CURRENTLY COMBINED															
	2-Wire Voice Grade Loop / 2-Wire DID Trunk Port Combination - Switch-as-is			UEPPX	USAC1		13.26	8.39					40.18	9.45		
	2-Wire Voice Grade Loop / 2-Wire DID Trunk Port Conversion with BellSouth Allowable Changes			UEPPX	USA1C		13.26	8.39					40.71	9.45		
	ADDITIONAL NRCs															
	2-Wire DID Subsequent Activity - Add Trunks, Per Trunk			UEPPX	USAS1		53.49						40.18	9.45		
	Telephone Number/Trunk Group Establisment Charges															
	DID Trunk Termination (One Per Port)			UEPPX	NDT	0.00	0.00	0.00								
	DID Numbers, Establish Trunk Group and Provide First Group of 20 DID Numbers			UEPPX	NDZ	0.00	0.00	0.00								
	Additional DID Numbers for each Group of 20 DID Numbers			UEPPX	ND4	0.00	0.00	0.00								
	DID Numbers, Non- consecutive DID Numbers , Per Number			UEPPX	ND5	0.00	0.00	0.00								
	Reserve Non-Consecutive DID numbers			UEPPX	ND6	0.00	0.00	0.00								
	Reserve DID Numbers			UEPPX	NDV	0.00	0.00	0.00								
	LOCAL NUMBER PORTABILITY															
	Local Number Portability (1 per port)			UEPPX	LNPCP	3.15	0.00	0.00								
	2-WIRE ISDN DIGITAL GRADE LOOP WITH 2-WIRE ISDN DIGITAL LINE SIDE PORT															
	UNE Port/Loop Combination Rates															
	2W ISDN Digital Grade Loop/2W ISDN Digital Line Side Port - Statewide		sw	UEPPB UEPPR		44.49										
	UNE Loop Rates															
	2-Wire ISDN Digital Grade Loop - Statewide		sw	UEPPB UEPPR	USL2X	20.12							19.99	19.99		
	UNE Port Rate															
	Exchange Port - 2-Wire ISDN Line Side Port			UEPPB UEPPR	UEPPB	24.37	450.00	375.00					19.99	19.99		
	NONRECURRING CHARGES - CURRENTLY COMBINED															
	2-Wire ISDN Digital Grade Loop / 2-Wire ISDN Line Side Port Combination - Conversion			UEPPB UEPPR	USACB	0.00	174.35	174.35					19.99	19.99		
	ADDITIONAL NRCs															
	LOCAL NUMBER PORTABILITY															
	Local Number Portability (1 per port)			UEPPB UEPPR	LNPCX	0.35	0.00	0.00								
	B-CHANNEL USER PROFILE ACCESS:															
	CVS/CSD (DMS/5ESS)			UEPPB UEPPR	U1UCA	0.00	0.00	0.00								
	CVS (EWSD)			UEPPB UEPPR	U1UCB	0.00	0.00	0.00								
	CSD			UEPPB UEPPR	U1UCC	0.00	0.00	0.00								
	B-CHANNEL AREA PLUS USER PROFILE ACCESS: (AL,KY,LA,MS SC,MS, & TN)															
	USER TERMINAL PROFILE															
	User Terminal Profile (EWSD only)			UEPPB UEPPR	U1UMA	0.00	0.00	0.00								
	VERTICAL FEATURES															
	All Vertical Features - One per Channel B User Profile			UEPPB UEPPR	UEPVF	3.40	0.00	0.00					19.99	19.99		
	INTEROFFICE CHANNEL MILEAGE															
	Interoffice Channel mileage each, including first mile and facilities termination			UEPPB UEPPR	M1GNC	17.42	137.48	52.58					19.99	19.99		
	Interoffice Channel mileage each, additional mile			UEPPB UEPPR	M1GNM	0.0282	0.00	0.00				0.00				

UNBUNDLED NETWORK ELEMENTS - North Carolina													Attachment: 2		Exhibit: B	
CATEGORY	RATE ELEMENTS	Interim	Zone	BCS	USOC	RATES($)					Svc Order Submitted Elec per LSR	Svc Order Submitted Manually per LSR	Incremental Charge - Manual Svc Order vs. Electronic-1st	Incremental Charge - Manual Svc Order vs. Electronic-Add'l	Incremental Charge - Manual Svc Order vs. Electronic-Disc 1st	Incremental Charge - Manual Svc Order vs. Electronic-Disc Add'l
						Rec	Nonrecurring		Nonrecurring Disconnect		OSS Rates($)					
							First	Add'l	First	Add'l	SOMEC	SOMAN	SOMAN	SOMAN	SOMAN	SOMAN
4-WIRE DS1 DIGITAL LOOP WITH 4-WIRE ISDN DS1 DIGITAL TRUNK PORT																
UNE Port/Loop Combination Rates																
	4W DS1 Digital Loop/4W ISDN DS1 Digital Trunk Port - Statewide		sw	UEPPP		241.72										
UNE Loop Rates																
	4-Wire DS1 Digital Loop - UNE Zone 3		3	UEPPP	USL4P											
UNE Port Rate																
	Exchange Ports - 4-Wire ISDN DS1 Port			UEPPP	UEPPP	179.01	1,150.00	1,150.00					19.99	19.99		
NONRECURRING CHARGES - CURRENTLY COMBINED																
	4-Wire DS1 Digital Loop / 4-Wire ISDN DS1 Digital Trunk Port Combination - Conversion -Switch-as-is			UEPPP	USACP	0.00	481.51	481.51					19.99	19.99		
ADDITIONAL NRCs																
	4-Wire DS1 Loop / 4-Wire ISDN DS1 Digital Trunk Port - Subsequent Inward/2-Way Tel Nos - (NC Only)			UEPPP	PR7TG		1.17	1.17					19.99	19.99		
	4-Wire DS1 Loop/4-Wire ISDN Digital Trunk Port - Subsequent Activity Outward tel nos. (NC only)			UEPPP	PR7TP		28.17	28.17					19.99	19.99		
	4-Wire DS1 Loop / 4-Wire ISDN DS1 Digital Trk Port - Subsequent Inward Tel Nos Above Std Allowance			UEPPP	PR7ZT		56.33	56.33					19.99	19.99		
LOCAL NUMBER PORTABILITY																
	Local Number Portability (1 per port)			UEPPP	LNPCN	1.75										
INTERFACE (Provsioning Only)																
	Voice/Data			UEPPP	PR71V	0.00	0.00	0.00								
	Digital Data			UEPPP	PR71D	0.00	0.00	0.00								
	Inward Data			UEPPP	PR71E	0.00	0.00	0.00								
New or Additional "B" Channel																
	New or Additional - Voice/Data B Channel			UEPPP	PR7BV	0.00	36.92						19.99	19.99		
	New or Additional - Digital Data B Channel			UEPPP	PR7BF	0.00	36.92						19.99	19.99		
	New or Additional Inward Data B Channel			UEPPP	PR7BD	0.00	36.92						19.99	19.99		
CALL TYPES																
	Inward			UEPPP	PR7C1	0.00	0.00	0.00								
	Outward			UEPPP	PR7C0	0.00	0.00	0.00								
	Two-way			UEPPP	PR7CC	0.00	0.00	0.00								
Interoffice Channel Mileage																
	Fixed Each Including First Mile			UEPPP	1LN1A	71.3683	217.17	163.75	0.00				19.99	19.99		
	Each Airline-Fractional Additional Mile			UEPPP	1LN1B	0.0783										
4-WIRE DS1 DIGITAL LOOP WITH 4-WIRE DDITS TRUNK PORT																
UNE Port/Loop Combination Rates																
	4W DS1 Digital Loop/4W DDITS Trunk Port - Statewide		sw	UEPDC		186.23							19.99	19.99		
UNE Loop Rates																
	4-Wire DS1 Digital Loop - Statewide		sw	UEPDC	USLDC	62.71	714.84	482.62					19.99	19.99		
UNE Port Rate																
	4-Wire DDITS Digital Trunk Port			UEPDC	UDD1T	123.65							19.99	19.99		
NONRECURRING CHARGES - CURRENTLY COMBINED																
	4-Wire DS1 Digital Loop / 4-Wire DDITS Trunk Port Combination - Switch-as-is			UEPDC	USAC4		288.86	133.87					19.99	19.99		
	4-Wire DS1 Digital Loop / 4-Wire DDITS Trunk Port Combination - Conversion with DS1 Changes			UEPDC	USAWA		288.86	133.37					19.99	19.99		
	4-Wire DS1 Digital Loop / 4-Wire DDITS Trunk Port Combination - Conversion with Change - Trunk			UEPDC	USAWB		288.86	133.37					19.99	19.99		
ADDITIONAL NRCs																
	4-Wire DS1 Loop / 4-Wire DDITS Trunk Port - Subsequent Service Activity Per Service Order			UEPDC	USAS4		127.63	127.63								
	4-Wire DS1 Loop / 4-Wire DDITS Trunk Port - NRC - Subsequent Channel Activation/Chan - 2-Way Trunk			UEPDC	UDTTA		28.81	28.81					19.99	19.99		
	4-Wire DS1 Loop / 4-Wire DDITS Trunk Port - Subsequent Channel Activation/Chan - 1-Way Outward Trunk			UEPDC	UDTTB		28.81	28.81					19.99	19.99		
	4-Wire DS1 Loop / 4-Wire DDITS Trunk Port - Subsqnt Channel Activation/Chan Inward Trunk w/out DID			UEPDC	UDTTC		28.81	28.81					19.99	19.99		

CATEGORY	RATE ELEMENTS	Interim	Zone	BCS	USOC	RATES($) Rec	Nonrecurring First	Nonrecurring Add'l	Nonrecurring Disconnect First	Nonrecurring Disconnect Add'l	Svc Order Submitted Elec per LSR	Svc Order Submitted Manually per LSR	Incremental Charge - Manual Svc Order vs. Electronic-1st	Incremental Charge - Manual Svc Order vs. Electronic-Add'l	Incremental Charge - Manual Svc Order vs. Electronic-Disc 1st	Incremental Charge - Manual Svc Order vs. Electronic-Disc Add'l
											OSS Rates($)					
											SOMEC	SOMAN	SOMAN	SOMAN	SOMAN	SOMAN
	4-Wire DS1 Loop / 4-Wire DDITS Trunk Port - Subsqnt Chan Activation Per Chan - Inward Trunk with DID			UEPDC	UDTTD		28.81	28.81					19.99	19.99		
	4-Wire DS1 Loop / 4-Wire DDITS Trunk Port - Subsqnt Chan Activation / Chan - 2-Way DID w User Trans			UEPDC	UDTTE		28.81	28.81					19.99	19.99		
	BIPOLAR 8 ZERO SUBSTITUTION															
	B8ZS -Superframe Format			UEPDC	CCOSF		0.00	615.00					19.99	19.99		
	B8ZS - Extended Superframe Format			UEPDC	CCOEF		0.00	615.00					19.99	19.99		
	Alternate Mark Inversion															
	AMI -Superframe Format			UEPDC	MCOSF		0.00	0.00								
	AMI - Extended SuperFrame Format			UEPDC	MCOPO		0.00	0.00								
	Telephone Number/Trunk Group Establisment Charges															
	Telephone Number for 2-Way Trunk Group			UEPDC	UDTGX	0.00							19.99	19.99		
	Telephone Number for 1-Way Outward Trunk Group			UEPDC	UDTGY	0.00							19.99	19.99		
	Telephone Number for 1-Way Inward Trunk Group Without DID			UEPDC	UDTGZ	0.00							19.99	19.99		
	DID Numbers, Establish Trunk Group and Provide First Group of 20 DID Numbers			UEPDC	NDZ	0.00	0.00	0.00								
	DID Numbers for each Group of 20 DID Numbers			UEPDC	ND4	0.00										
	DID Numbers, Non- consecutive DID Numbers , Per Number			UEPDC	ND5	0.00										
	Reserve Non-Consecutive DID Nos.			UEPDC	ND6	0.00	0.00	0.00								
	Reserve DID Numbers			UEPDC	NDV	0.00	0.00	0.00								
	Dedicated DS1 (Interoffice Channel Mileage) - FX/FCO for 4-Wire DS1 Digital Loop with 4-Wire DDITS Trunk Port															
	Interoffice Channel Mileage - Fixed rate 0-8 miles (Facilities Termination)			UEPDC	1LNO1	71.29	217.17	163.75	0.00	0.00			19.99	19.99		
	Interoffice Channel Mileage - Additional rate per mile - 0-8 miles			UEPDC	1LNOA	0.0783	0.00	0.00								
	Interoffice Channel Mileage - Fixed rate 9-25 miles (Facilities Termination)			UEPDC	1LNO2	0.00	0.00	0.00								
	Interoffice Channel Mileage - Additional rate per mile - 9-25 miles			UEPDC	1LNOB	0.0783	0.00	0.00								
	Interoffice Channel Mileage - Fixed rate 25+ miles (Facilities Termination)			UEPDC	1LNO3	0.00	0.00	0.00	0.00							
	Interoffice Channel Mileage - Additional rate per mile - 25+ miles			UEPDC	1LNOC	0.0783	0.00	0.00								
	Local Number Portability, per DS0 Activated			UEPDC	LNPCP	3.15	0.00	0.00	0.00							
	Central Office Termininating Point			UEPDC	CTG	0.00										
	4-WIRE DS1 LOOP WITH CHANNELIZATION WITH PORT															
	System is 1 DS1 Loop, 1 D4 Channel Bank, and up to 24 Feature Activations															
	Each System can have up to 24 combinations of rates depending on type and number of ports used															
	UNE DS1 Loop															
	4-wire DS1 Loop UNE - Statewide		sw	UEPMG	USLDC	62.71							19.99			
	UNE DSO Channelization Capacities (D4 Channel Bank Configurations)															
	24 DSO Channel Capacity - 1 per DS1			UEPMG	VUM24	123.06	0.00	0.00					19.99	19.99		
	48 DSO Channel Capacity - 1 per 2 DS1s			UEPMG	VUM48	246.12	0.00	0.00					19.99	19.99		
	96 DSO Channel Capacity -1per 4 DS1s			UEPMG	VUM96	492.24	0.00	0.00					19.99	19.99		
	144 DS0 Channel Capacity - 1 per 6 DS1s			UEPMG	VUM14	738.36	0.00	0.00					19.99	19.99		
	192 DS0 Channel Capacity -1 per 8 DS1s			UEPMG	VUM19	984.48	0.00	0.00					19.99	19.99		
	240 DS0 Channel Capacity - 1 per 10 DS1s			UEPMG	VUM20	1,230.60	0.00	0.00					19.99	19.99		
	288 DS0 Channel Capacity - 1 per 12 DS1s			UEPMG	VUM28	1,476.72	0.00	0.00					19.99	19.99		
	384 DS0 Channel Capacity - 1 per 16 DS1s			UEPMG	VUM38	1,968.96	0.00	0.00					19.99	19.99		
	480 DS0 Channel Capacity - 1 per 20 DS1s			UEPMG	VUM40	2,461.20	0.00	0.00					19.99	19.99		
	576 DS0 Channel Capacity -1 per 24 DS1s			UEPMG	VUM57	2,953.44	0.00	0.00					19.99	19.99		
	672 DS0 Channel Capacity - 1 per 28 DS1s			UEPMG	VUM67	3,445.68	0.00	0.00					19.99	19.99		
	Non-Recurring Charges (NRC) Associated with 4-Wire DS1 Loop with Channeliztion with Port - Conversion Charge Based on a System															
	A Minimum System configuration is One (1) DS1, One (1) D4 Channel Bank, and Up To 24 DSO Ports with Feature Activations.															
	Multiples of this configuration functioning as one are considered Add'l after the minimum system configuration is counted.															
	NRC - Conversion (Currently Combined) with or without BellSouth Allowed Changes			UEPMG	USAC4	0.00	330.61	16.64					19.99	19.99		
	System Additions at End User Locations Where 4-Wire DS1 Loop with Channelization with Port Combination Currently Exists and															
	New (Not Currently Combined) In GA, KY, LA, MS & TN Only															

CATEGORY	RATE ELEMENTS	Interim	Zone	BCS	USOC	RATES($)					Svc Order Submitted Elec per LSR	Svc Order Submitted Manually per LSR	Incremental Charge - Manual Svc Order vs. Electronic-1st	Incremental Charge - Manual Svc Order vs. Electronic-Add'l	Incremental Charge - Manual Svc Order vs. Electronic-Disc 1st	Incremental Charge - Manual Svc Order vs. Electronic-Disc Add'l
						Rec	Nonrecurring		Nonrecurring Disconnect		OSS Rates($)					
							First	Add'l	First	Add'l	SOMEC	SOMAN	SOMAN	SOMAN	SOMAN	SOMAN
	1 DS1/D4 Channel Bank - Add NRC for each Port and Assoc Fea Activation - New GA, LA, KY, MS, &TN Only			UEPMG	VUMD4	0.00	743.74	326.22	149.02	17.68			19.99			
	Bipolar 8 Zero Substitution															
	Clear Channel Capability Format, superframe - Subsequent Activity Only			UEPMG	CCOSF	0.00	0.00	615.00								
	Clear Channel Capability Format - Extended Superframe - Subsequent Activity Only			UEPMG	CCOEF	0.00	0.00	615.00								
	Alternate Mark Inversion (AMI)															
	Superframe Format			UEPMG	MCOSF	0.00	0.00	0.00								
	Extended Superframe Format			UEPMG	MCOPO	0.00	0.00	0.00								
	Exchange Ports Associated with 4-Wire DS1 Loop with Channelization with Port															
	Exchange Ports															
	Line Side Combination Channelized PBX Trunk Port - Business			UEPPX	UEPCX	2.28	0.00	0.00	0.00	0.00			40.18	9.45		
	Line Side Outward Channelized PBX Trunk Port - Business			UEPPX	UEPOX	2.28	0.00	0.00	0.00	0.00			40.18	9.45		
	Line Side Inward Only Channelized PBX Trunk Port without DID			UEPPX	UEP1X	2.28	0.00	0.00	0.00	0.00			40.18	9.45		
	2-Wire Trunk Side Unbundled Channelized DID Trunk Port			UEPPX	UEPDM	13.26	0.00	0.00	0.00	0.00			40.18	9.45		
	Feature Activations - Unbundled Loop Concentration															
	Feature (Service) Activation for each Line Side Port Terminated in D4 Bank			UEPPX	1PQWM	0.65	25.27	13.34	4.15	4.12			40.18	9.45		
	Feature (Service) Activation for each Trunk Side Port Terminated in D4 Bank			UEPPX	1PQWU	0.65	77.75	18.33	58.74	11.48			40.18	9.45		
	Telephone Number/ Group Establishment Charges for DID Service															
	DID Trunk Termination (1 per Port)			UEPPX	NDT	0.00	0.00	0.00								
	Estab Trk Grp and Provide 1st 20 DID Nos. (FL,GA, NC,& SC)			UEPPX	NDZ	0.00	0.00	0.00								
	DID Numbers - groups of 20 - Valid all States			UEPPX	ND4	0.00	0.00	0.00								
	Non-Consecutive DID Numbers - per number			UEPPX	ND5	0.00	0.00	0.00								
	Reserve Non-Consecutive DID Numbers			UEPPX	ND6	0.00	0.00	0.00								
	Reserve DID Numbers			UEPPX	NDV	0.00	0.00	0.00								
	Local Number Portability															
	Local Number Portability - 1 per port			UEPPX	LNPCP	3.15	0.00	0.00								
	FEATURES - Vertical and Optional															
	Local Switching Features Offered with Line Side Ports Only															
	All Features Available			UEPPX	UEPVF	3.40	0.00	0.00					40.18	9.45		
UNBUNDLED PORT LOOP COMBINATIONS - MARKET RATES																
	Market Rates shall apply where BellSouth is not required to provide unbundled local switching or switch ports per FCC and/or State Commission rules.															
	These scenarios include:															
	1. Unbundled port/loop combinations that are Not Currently Combined in Alabama, Florida and North Carolina.															
	2. Unbundled port/loop combinations that are Currently Combined or Not Currently Combined in Zone 1 of the Top 8 MSAS in BellSouth's region for end users with 4 or more DS0 equivalent lines.															
	The Top 8 MSAs in BellSouth's region are: FL (Orlando, Ft. Lauderdale, Miami); GA (Atlanta); LA (New Orleans); NC (Greensboro-Winston Salem-Highpoint/Charlotte-Gastonia-Rock Hill); TN (Nashville).															
	BellSouth currently is developing the billing capability to mechanically bill the recurring and non-recurring Market Rates in this section except for nonrecurring charges for not currently combined in AL, FL and NC. In the interim where BellSouth cannot bill Market Rates, BellSouth shall bill the rates in the Cost-Based section preceding in lieu of the Market Rates and reserves the right to true-up the billing difference.															
	The Market Rate for unbundled ports includes all available features in all states.															
	End Office and Tandem Switching Usage and Common Transport Usage rates in the Port section of this rate exhibit shall apply to all combinations of loop/port network elements except for UNE Coin Port/Loop Combinations which have a flat rate usage charge (USOC: URECU).															
	For Not Currently Combined scenarios where Market Rates apply, the Nonrecurring charges are listed in the First and Additional NRC columns for each Port USOC. For Currently Combined scenarios, the Nonrecurring charges are listed in the NRC - Currently Combined section. Additional NRCs may apply also and are categorized accordingly.															
	2-WIRE VOICE GRADE LOOP WITH 2-WIRE LINE PORT (RES)															
	UNE Port/Loop Combination Rates															
	2-Wire VG Loop/Port Combo - Statewide		sw			28.18										
	UNE Loop Rates															
	2-Wire Voice Grade Loop (SL1) - Statewide		sw	UEPRX	UEPLX	14.18										
	2-Wire Voice Grade Line Port (Res)															
	2-Wire voice unbundled port - residence			UEPRX	UEPRL	14.00	90.00	90.00					40.18	9.45		
	2-Wire voice unbundled port with Caller ID - res			UEPRX	UEPRC	14.00	90.00	90.00					40.18	9.45		
	2-Wire voice unbundled port outgoing only - res			UEPRX	UEPRO	14.00	90.00	90.00					40.18	9.45		
	2-Wire voice unbundles res, low usage line port with Caller ID (LUM)			UEPRX	UEPAP	14.00	90.00	90.00					40.18	9.45		

UNBUNDLED NETWORK ELEMENTS - North Carolina													Attachment: 2		Exhibit: B	
CATEGORY	RATE ELEMENTS	Interim	Zone	BCS	USOC	RATES($)					Svc Order Submitted Elec per LSR	Svc Order Submitted Manually per LSR	Incremental Charge - Manual Svc Order vs. Electronic-1st	Incremental Charge - Manual Svc Order vs. Electronic-Add'l	Incremental Charge - Manual Svc Order vs. Electronic-Disc 1st	Incremental Charge - Manual Svc Order vs. Electronic-Disc Add'l
						Rec	Nonrecurring		Nonrecurring Disconnect		OSS Rates($)					
							First	Add'l	First	Add'l	SOMEC	SOMAN	SOMAN	SOMAN	SOMAN	SOMAN
LOCAL NUMBER PORTABILITY																
	Local Number Portability (1 per port)			UEPRX	LNPCX	0.35										
FEATURES																
	All Features Offered			UEPRX	UEPVF	0.00	0.00	0.00					40.18	9.45		
	2-Wire Voice Grade Loop / Line Port Combination - Switch-as-is			UEPRX	USAC2		41.50	41.50					40.18	9.45		
	2-Wire Voice Grade Loop / Line Port Combination - Switch with change			UEPRX	USACC		41.50	41.50					40.18	9.45		
ADDITIONAL NRCs																
	NRC - 2-Wire Voice Grade Loop/Line Port Combination - Subsequent			UEPRX	USAS2		0.00	0.00					40.18	9.45		
2-WIRE VOICE GRADE LOOP WITH 2-WIRE LINE PORT (BUS)																
UNE Port/Loop Combination Rates																
	2-Wire VG Loop/Port Combo - Statewide		sw			28.18										
UNE Loop Rates																
	2-Wire Voice Grade Loop (SL1) - Statewide		sw	UEPBX	UEPLX	14.18										
2-Wire Voice Grade Line Port (Bus)																
	2-Wire voice unbundled port without Caller ID - bus			UEPBX	UEPBL	14.00	90.00	90.00					40.18	9.45		
	2-Wire voice unbundled port with Caller + E484 ID - bus			UEPBX	UEPBC	14.00	90.00	90.00					40.18	9.45		
	2-Wire voice unbundled port outgoing only - bus			UEPBX	UEPBO	14.00	90.00	90.00					40.18	9.45		
LOCAL NUMBER PORTABILITY																
	Local Number Portability (1 per port)			UEPBX	LNPCX	0.35										
FEATURES																
	All Features Offered			UEPBX	UEPVF	0.00	0.00	0.00					40.18	9.45		
NONRECURRING CHARGES - CURRENTLY COMBINED																
	2-Wire Voice Grade Loop / Line Port Combination - Switch-as-is			UEPBX	USAC2		41.50	41.50					40.18	9.45		
	2-Wire Voice Grade Loop / Line Port Combination - Switch with change			UEPBX	USACC		41.50	41.50					40.18	9.45		
ADDITIONAL NRCs																
	NRC - 2-Wire Voice Grade Loop/Line Port Combination - Subsequent			UEPBX	USAS2		0.00	0.00					40.18	9.45		
2-WIRE VOICE GRADE LOOP WITH 2-WIRE LINE PORT (RES - PBX)																
UNE Port/Loop Combination Rates																
	2-Wire VG Loop/Port Combo - Statewide		sw			28.18										
UNE Loop Rates																
	2-Wire Voice Grade Loop (SL1) - Statewide		sw	UEPRG	UEPLX	14.18										
2-Wire Voice Grade Line Port Rates (RES - PBX)																
	2-Wire VG Unbundled Combination 2-Way PBX Trunk Port - Res			UEPRG	UEPRD	14.00	90.00	90.00					40.18	9.45		
LOCAL NUMBER PORTABILITY																
	Local Number Portability (1 per port)			UEPRG	LNPCP	3.15	0.00	0.00								
FEATURES																
	All Features Offered			UEPRG	UEPVF	0.00	0.00	0.00					40.18	9.45		
NONRECURRING CHARGES - CURRENTLY COMBINED																
	2-Wire Voice Grade Loop/ Line Port Combination - Switch-As-Is			UEPRG	USAC2		41.50	41.50					40.18	9.45		
	2-Wire Voice Grade Loop/ Line Port Combination - Switch with Change			UEPRG	USACC		41.50	41.50					40.18	9.45		
ADDITIONAL NRCs																
	2 Wire Loop/Line Side Port Combination - Non feature - Subsequent Activity- Nonrecurring						0.00	0.00					40.18	9.45		
	PBX Subsequent Activity - Change/Rearrange Multiline Hunt Group						14.64	14.64					40.18	9.45		
2-WIRE VOICE GRADE LOOP WITH 2-WIRE LINE PORT (BUS - PBX)																
UNE Port/Loop Combination Rates																
	2-Wire VG Loop/Port Combo - Statewide		sw			28.18										
UNE Loop Rates																
	2-Wire Voice Grade Loop (SL1) - Statewide		sw	UEPPX	UEPLX	14.18										

UNBUNDLED NETWORK ELEMENTS - North Carolina													Attachment: 2		Exhibit: B	
CATEGORY	RATE ELEMENTS	Interim	Zone	BCS	USOC	RATES($)					Svc Order Submitted Elec per LSR	Svc Order Submitted Manually per LSR	Incremental Charge - Manual Svc Order vs. Electronic-1st	Incremental Charge - Manual Svc Order vs. Electronic-Add'l	Incremental Charge - Manual Svc Order vs. Electronic-Disc 1st	Incremental Charge - Manual Svc Order vs. Electronic-Disc Add'l
						Rec	Nonrecurring		Nonrecurring Disconnect		OSS Rates($)					
							First	Add'l	First	Add'l	SOMEC	SOMAN	SOMAN	SOMAN	SOMAN	SOMAN
2-Wire Voice Grade Line Port Rates (BUS - PBX)																
	Line Side Unbundled Combination 2-Way PBX Trunk Port - Bus			UEPPX	UEPPC	14.00	90.00	90.00					40.18	9.45		
	Line Side Unbundled Outward PBX Trunk Port - Bus			UEPPX	UEPPO	14.00	90.00	90.00					40.18	9.45		
	Line Side Unbundled Incoming PBX Trunk Port - Bus			UEPPX	UEPP1	14.00	90.00	90.00					40.18	9.45		
	2-Wire Voice Unbundled PBX LD Terminal Ports			UEPPX	UEPLD	14.00	90.00	90.00					40.18	9.45		
	2-Wire Voice Unbundled 2-Way Combination PBX Usage Port			UEPPX	UEPXA	14.00	90.00	90.00					40.18	9.45		
	2-Wire Voice Unbundled PBX Toll Terminal Hotel Ports			UEPPX	UEPXB	14.00	90.00	90.00					40.18	9.45		
	2-Wire Voice Unbundled PBX LD DDD Terminals Port			UEPPX	UEPXC	14.00	90.00	90.00					40.18	9.45		
	2-Wire Voice Unbundled PBX LD Terminal Switchboard Port			UEPPX	UEPXD	14.00	90.00	90.00					40.18	9.45		
	2-Wire Voice Unbundled PBX LD Terminal Switchboard IDD Capable Port			UEPPX	UEPXE	14.00	90.00	90.00					40.18	9.45		
	2-Wire Voice Unbundled 2-Way PBX Hotel/Hospital Economy Administrative Calling Port			UEPPX	UEPXL	14.00	90.00	90.00					40.18	9.45		
	2-Wire Voice Unbundled 2-Way PBX Hotel/Hospital Economy Room Calling Port			UEPPX	UEPXM	14.00	90.00	90.00					40.18	9.45		
	2-Wire Voice Unbundled 1-Way Outgoing PBX Hotel/Hospital Discount Room Calling Port			UEPPX	UEPXO	14.00	90.00	90.00					40.18	9.45		
	2-Wire Voice Unbundled 1-Way Outgoing PBX Measured Port			UEPPX	UEPXS	14.00	90.00	90.00					40.18	9.45		
LOCAL NUMBER PORTABILITY																
	Local Number Portability (1 per port)			UEPPX	LNPCP	3.15	0.00	0.00								
FEATURES																
	All Features Offered			UEPPX	UEPVF	0.00	0.00	0.00					40.18	9.45		
NONRECURRING CHARGES - CURRENTLY COMBINED																
	2-Wire Voice Grade Loop/ Line Port Combination - Switch-As-Is			UEPPX	USAC2		41.50	41.50					40.18	9.45		
	2-Wire Voice Grade Loop/ Line Port Combination - Switch with Change			UEPPX	USACC		41.50	41.50					40.18	9.45		
ADDITIONAL NRCs																
	2-Wire Voice Grade Loop/ Line Port Combination - Subsequent			UEPPX	USAS2		0.00	0.00					40.18	9.45		
	2 Wire Loop/Line Side Port Combination - Non feature - Subsequent Activity- Nonrecurring						0.00	0.00					40.18	9.45		
	PBX Subsequent Activity - Change/Rearrange Multiline Hunt Group						14.64	14.64					40.18	9.45		
2-WIRE VOICE GRADE LOOP WITH 2-WIRE ANALOG LINE COIN PORT																
UNE Port/Loop Combination Rates																
	2-Wire VG Coin Port/Loop Combo – Statewide		sw			28.18										
UNE Loop Rates																
	2-Wire Voice Grade Loop (SL1) - Statewide		sw	UEPCO	UEPLX	14.18										
2-Wire Voice Grade Line Port Rates (Coin)																
	2-Wire Coin 2-Way without Operator Screening and without Blocking (NC)			UEPCO	UEPND	14.00	90.00	90.00					40.18	9.45		
	2-Wire Coin 2-Way with Operator Screening (NC)			UEPCO	UEPNC	14.00	90.00	90.00					40.18	9.45		
	2-Wire Coin 2-Way with Operator Screening and Blocking: 011, 900/976, 1+DDD (NC, TN)			UEPCO	UEPRP	14.00	90.00	90.00					40.18	9.45		
	2-Wire Coin 2-Way with Operator Screening and 011 Blocking (NC)			UEPCO	UEPNB	14.00	90.00	90.00					40.18	9.45		
	2-Wire Coin 2-Way with Operator Screening and Blocking: 900/976, 1+DDD, 011+, and Local (NC, TN)			UEPCO	UEPCA	14.00	90.00	90.00					40.18	9.45		
	2-Wire Coin Outward with Operator Screening and 011 Blocking (NC)			UEPCO	UEPNE	14.00	90.00	90.00					40.18	9.45		
	2-Wire Coin Outward with Operator Screening and Blocking: 900/976, 1+DDD, 011+, and Local (NC)			UEPCO	UEPCL	14.00	90.00	90.00					40.18	9.45		
LOCAL NUMBER PORTABILITY																
	Local Number Portability (1 per port)			UEPCO	LNPCX	0.35										
NONRECURRING CHARGES - CURRENTLY COMBINED																
	2-Wire Voice Grade Loop/ Line Port Combination - Switch-As-Is			UEPCO	USAC2		41.50	41.50					40.18	9.45		

UNBUNDLED NETWORK ELEMENTS - North Carolina													Attachment: 2		Exhibit: B	
CATEGORY	RATE ELEMENTS	Interim	Zone	BCS	USOC	RATES($)					Svc Order Submitted Elec per LSR	Svc Order Submitted Manually per LSR	Incremental Charge - Manual Svc Order vs. Electronic-1st	Incremental Charge - Manual Svc Order vs. Electronic-Add'l	Incremental Charge - Manual Svc Order vs. Electronic-Disc 1st	Incremental Charge - Manual Svc Order vs. Electronic-Disc Add'l
						Rec	Nonrecurring		Nonrecurring Disconnect		OSS Rates($)					
							First	Add'l	First	Add'l	SOMEC	SOMAN	SOMAN	SOMAN	SOMAN	SOMAN
	2-Wire Voice Grade Loop/ Line Port Combination - Switch with Change			UEPCO	USACC		41.50	41.50					40.18	9.45		
ADDITIONAL NRCs																
	2-Wire Voice Grade Loop/ Line Port Combination - Subsequent			UEPCO	USAS2		0.00	0.00					40.18	9.45		
UNBUNDLED PORT/LOOP COMBINATIONS - MARKET BASED RATES																
2-WIRE VOICE GRADE LOOP- BUS ONLY - WITH 2-WIRE DID TRUNK PORT																
UNE Port/Loop Combination Rates																
	2-Wire VG Loop/2-Wire DID Trunk Port Combo - Statewide		sw			71.50										
UNE Loop Rates																
	2-Wire Analog Voice Grade Loop - (SL2) - Statewide		sw			19.50							40.18	9.45		
UNE Port Rate																
	Exchange Ports - 2-Wire DID Port			UEPPX	UEPD1	52.00	485.00	75.00					40.18	9.45		
NONRECURRING CHARGES - CURRENTLY COMBINED																
	2-Wire Voice Grade Loop / 2-Wire DID Trunk Port Combination - Switch-As-Is Top 8 MSAs only			UEPPX	USAC1		200.00	75.00					40.18	9.45		
	2-Wire Voice Grade Loop / 2-Wire DID Trunk Port Conversion with BellSouth Allowable Changes Top 8 MSAs only			UEPPX	USA1C		200.00	75.00					40.71	9.45		
ADDITIONAL NRCs																
	2-Wire DID Subsequent Activity - Add Trunks, Per Trunk			UEPPX	USAS1		75.00						40.18	9.45		
Telephone Number/Trunk Group Establisment Charges																
	DID Trunk Termination (One Per Port)			UEPPX	NDT	0.00	0.00	0.00								
	DID Numbers, Establish Trunk Group and Provide First Group of 20 DID Numbers			UEPPX	NDZ	0.00	0.00	0.00								
	Additional DID Numbers for each Group of 20 DID Numbers			UEPPX	ND4	0.00	0.00	0.00								
	DID Numbers, Non- consecutive DID Numbers , Per Number			UEPPX	ND5	0.00	0.00	0.00								
	Reserve Non-Consecutive DID numbers			UEPPX	ND6	0.00	0.00	0.00								
	Reserve DID Numbers			UEPPX	NDV	0.00	0.00	0.00								
LOCAL NUMBER PORTABILITY																
	Local Number Portability (1 per port)			UEPPX	LNPCP	3.15	0.00	0.00								
2-WIRE ISDN DIGITAL GRADE LOOP WITH 2-WIRE ISDN DIGITAL LINE SIDE PORT																
UNE Port/Loop Combination Rates																
	2W ISDN Digital Grade Loop/2W ISDN Digital Line Side Port - Statewide		sw	UEPPB UEPPR		85.12										
UNE Loop Rates																
	2-Wire ISDN Digital Grade Loop - Statewide		sw	UEPPB UEPPR	USL2X	20.12							19.99	19.99		
UNE Port Rate																
	Exchange Port - 2-Wire ISDN Line Side Port			UEPPB UEPPR	UEPPB	65.00	450.00	375.00					19.99	19.99		
NONRECURRING CHARGES - CURRENTLY COMBINED																
	2-Wire ISDN Digital Grade Loop / 2-Wire ISDN Line Side Port Combination - Conversion - Top 8 MSAs only			UEPPB UEPPR	USACB	0.00	200.00	200.00					19.99	19.99		
ADDITIONAL NRCs																
LOCAL NUMBER PORTABILITY																
	Local Number Portability (1 per port)			UEPPB UEPPR	LNPCX	0.35	0.00	0.00								
B-CHANNEL USER PROFILE ACCESS:																
	CVS/CSD (DMS/5ESS)			UEPPB UEPPR	U1UCA	0.00	0.00	0.00								
	CVS (EWSD)			UEPPB UEPPR	U1UCB	0.00	0.00	0.00								
	CSD			UEPPB UEPPR	U1UCC	0.00	0.00	0.00								
B-CHANNEL AREA PLUS USER PROFILE ACCESS: (AL,KY,LA,MS SC,MS, & TN)																
USER TERMINAL PROFILE																
	User Terminal Profile (EWSD only)			UEPPB UEPPR	U1UMA	0.00	0.00	0.00								
VERTICAL FEATURES																
	All Vertical Features - One per Channel B User Profile			UEPPB UEPPR	UEPVF	3.40	0.00	0.00					19.99	19.99		
INTEROFFICE CHANNEL MILEAGE																
	Interoffice Channel mileage each, including first mile and facilities termination			UEPPB UEPPR	M1GNC	17.42	137.48	52.58					19.99	19.99		
	Interoffice Channel mileage each, additional mile			UEPPB UEPPR	M1GNM	0.0282	0.00	0.00								
4-WIRE DS1 DIGITAL LOOP WITH 4-WIRE ISDN DS1 DIGITAL TRUNK PORT																

UNBUNDLED NETWORK ELEMENTS - North Carolina													Attachment: 2		Exhibit: B	
CATEGORY	RATE ELEMENTS	Interim	Zone	BCS	USOC	RATES($)					Svc Order Submitted Elec per LSR	Svc Order Submitted Manually per LSR	Incremental Charge - Manual Svc Order vs. Electronic-1st	Incremental Charge - Manual Svc Order vs. Electronic-Add'l	Incremental Charge - Manual Svc Order vs. Electronic-Disc 1st	Incremental Charge - Manual Svc Order vs. Electronic-Disc Add'l
						Rec	Nonrecurring		Nonrecurring Disconnect		OSS Rates($)					
							First	Add'l	First	Add'l	SOMEC	SOMAN	SOMAN	SOMAN	SOMAN	SOMAN
UNE Port/Loop Combination Rates																
	4W DS1 Digital Loop/4W ISDN DS1 Digital Trunk Port - Statewide		sw	UEPPP		962.71										
UNE Loop Rates																
	4-Wire DS1 Digital Loop - UNE Zone 3		3	UEPPP	USL4P											
UNE Port Rate																
	Exchange Ports - 4-Wire ISDN DS1 Port			UEPPP	UEPPP	900.00	1,150.00	1,150.00					19.99	19.99		
NONRECURRING CHARGES - CURRENTLY COMBINED																
	4-Wire DS1 Digital Loop / 4-Wire ISDN DS1 Digital Trunk Port Combination - Conversion -Switch-As-Is Top 8 MSAs only			UEPPP	USACP	0.00	925.00	925.00					19.99	19.99		
ADDITIONAL NRCs																
	4-Wire DS1 Loop / 4-Wire ISDN DS1 Digital Trunk Port - Subsequent Inward/2-Way Tel Nos - (NC Only)			UEPPP	PR7TG		1.17	1.17					19.99	19.99		
	4-Wire DS1 Loop/4-Wire ISDN Digital Trunk Port - Subsequent Activity Outward tel nos. (NC only)			UEPPP	PR7TP		28.17	28.17					19.99	19.99		
	4-Wire DS1 Loop / 4-Wire ISDN DS1 Digital Trk Port - Subsequent Inward Tel Nos Above Std Allowance			UEPPP	PR7ZT		56.33	56.33					19.99	19.99		
LOCAL NUMBER PORTABILITY																
	Local Number Portability (1 per port)			UEPPP	LNPCN	1.75										
INTERFACE (Provsioning Only)																
	Voice/Data			UEPPP	PR71V	0.00										
	Digital Data			UEPPP	PR71D	0.00										
	Inward Data			UEPPP	PR71E	0.00										
New or Additional "B" Channel																
	New or Additional - Voice/Data B Channel			UEPPP	PR7BV	0.00	36.92						19.99	19.99		
	New or Additional - Digital Data B Channel			UEPPP	PR7BF	0.00	36.92						19.99	19.99		
	New or Additional Inward Data B Channel			UEPPP	PR7BD	0.00	36.92						19.99	19.99		
CALL TYPES																
	Inward			UEPPP	PR7C1	0.00										
	Outward			UEPPP	PR7C0	0.00										
	Two-way			UEPPP	PR7CC	0.00										
Interoffice Channel Mileage																
	Fixed Each Including First Mile			UEPPP	1LN1A	71.3683	217.17	163.75	0.00				19.99	19.99		
	Each Airline-Fractional Additional Mile			UEPPP	1LN1B	0.0783										
4-WIRE DS1 DIGITAL LOOP WITH 4-WIRE DDITS TRUNK PORT																
UNE Port/Loop Combination Rates																
	4W DS1 Digital Loop/4W DDITS Trunk Port - Statewide		sw	UEPDC		186.23							19.99	19.99		
	4W DS1 Digital Loop/4W DDITS Trunk Port - UNE Zone 1		1	UEPDC												
	4W DS1 Digital Loop/4W DDITS Trunk Port - UNE Zone 2		2	UEPDC												
	4W DS1 Digital Loop/4W DDITS Trunk Port - UNE Zone 3		3	UEPDC												
	4W DS1 Digital Loop/4W DDITS Trunk Port - UNE Zone 4		4	UEPDC												
UNE Loop Rates																
	4-Wire DS1 Digital Loop - Statewide		sw	UEPDC	USLDC	62.71	714.84	482.62					19.99	19.99		
	4-Wire DS1 Digital Loop - UNE Zone 1		1	UEPDC	USLDC											
	4-Wire DS1 Digital Loop - UNE Zone 2		2	UEPDC	USLDC											
	4-Wire DS1 Digital Loop - UNE Zone 3		3	UEPDC	USLDC											
	4-Wire DS1 Digital Loop - UNE Zone 4		4	UEPDC	USLDC											
UNE Port Rate																
	4-Wire DDITS Digital Trunk Port			UEPDC	UDD1T	750.00	1,048.23	480.17	0.00	0.00			19.99	19.99		
NONRECURRING CHARGES - CURRENTLY COMBINED																
	4-Wire DS1 Digital Loop / 4-Wire DDITS Trunk Port Combination - Switch-As-Is Top 8 MSAs only			UEPDC	USAC4		288.86	133.87					19.99	19.99		
	4-Wire DS1 Digital Loop / 4-Wire DDITS Trunk Port Combination - Conversion with DS1 Changes Top 8 MSAs only			UEPDC	USAWA		288.86	133.37					19.99	19.99		
	4-Wire DS1 Digital Loop / 4-Wire DDITS Trunk Port Combination - Conversion with Change - Trunk Top 8 MSAs only			UEPDC	USAWB		288.86	133.37					19.99	19.99		
ADDITIONAL NRCs																

CATEGORY	RATE ELEMENTS	Interim	Zone	BCS	USOC	RATES($) Rec	Nonrecurring First	Nonrecurring Add'l	Nonrecurring Disconnect First	Nonrecurring Disconnect Add'l	Svc Order Submitted Elec per LSR	Svc Order Submitted Manually per LSR	Incremental Charge - Manual Svc Order vs. Electronic-1st	Incremental Charge - Manual Svc Order vs. Electronic-Add'l	Incremental Charge - Manual Svc Order vs. Electronic-Disc 1st	Incremental Charge - Manual Svc Order vs. Electronic-Disc Add'l
											OSS Rates($)					
											SOMEC	SOMAN	SOMAN	SOMAN	SOMAN	SOMAN
	4-Wire DS1 Loop / 4-Wire DDITS Trunk Port - Subsequent Service Activity Per Service Order			UEPDC	USAS4		127.63	127.63								
	4-Wire DS1 Loop / 4-Wire DDITS Trunk Port - NRC - Subsequent Channel Activation/Chan - 2-Way Trunk			UEPDC	UDTTA		28.81	28.81					19.99	19.99		
	4-Wire DS1 Loop / 4-Wire DDITS Trunk Port - Subsequent Channel Activation/Chan - 1-Way Outward Trunk			UEPDC	UDTTB		28.81	28.81					19.99	19.99		
	4-Wire DS1 Loop / 4-Wire DDITS Trunk Port - Subsqnt Channel Activation/Chan Inward Trunk w/out DID			UEPDC	UDTTC		28.81	28.81					19.99	19.99		
	4-Wire DS1 Loop / 4-Wire DDITS Trunk Port - Subsqnt Chan Activation Per Chan - Inward Trunk with DID			UEPDC	UDTTD		28.81	28.81					19.99	19.99		
	4-Wire DS1 Loop / 4-Wire DDITS Trunk Port - Subsqnt Chan Activation / Chan - 2-Way DID w User Trans			UEPDC	UDTTE		28.81	28.81					19.99	19.99		
BIPOLAR 8 ZERO SUBSTITUTION																
	B8ZS -Superframe Format			UEPDC	CCOSF		0.00	615.00					19.99	19.99		
	B8ZS - Extended Superframe Format			UEPDC	CCOEF		0.00	615.00					19.99	19.99		
Alternate Mark Inversion																
	AMI -Superframe Format			UEPDC	MCOSF		0.00	0.00								
	AMI - Extended SuperFrame Format			UEPDC	MCOPO		0.00	0.00								
Telephone Number/Trunk Group Establisment Charges																
	Telephone Number for 2-Way Trunk Group			UEPDC	UDTGX	0.00							19.99	19.99		
	Telephone Number for 1-Way Outward Trunk Group			UEPDC	UDTGY	0.00							19.99	19.99		
	Telephone Number for 1-Way Inward Trunk Group Without DID			UEPDC	UDTGZ	0.00							19.99	19.99		
	DID Numbers, Establish Trunk Group and Provide First Group of 20 DID Numbers			UEPDC	NDZ	0.00	0.00	0.00								
	DID Numbers for each Group of 20 DID Numbers			UEPDC	ND4	0.00	0.00	0.00								
	DID Numbers, Non- consecutive DID Numbers , Per Number			UEPDC	ND5	0.00	0.00	0.00								
	Reserve Non-Consecutive DID Nos.			UEPDC	ND6	0.00	0.00	0.00								
	Reserve DID Numbers			UEPDC	NDV	0.00	0.00	0.00								
Dedicated DS1 (Interoffice Channel Mileage) -																
FX/FCO for 4-Wire DS1 Digital Loop with 4-Wire DDITS Trunk Port																
	Interoffice Channel Mileage - Fixed rate 0-8 miles (Facilities Termination)			UEPDC	1LNO1	71.29	217.17	163.75	0.00	0.00			19.99	19.99		
	Interoffice Channel Mileage - Additional rate per mile - 0-8 miles			UEPDC	1LNOA	0.0783	0.00	0.00								
	Interoffice Channel Mileage - Fixed rate 9-25 miles (Facilities Termination)			UEPDC	1LNO2	0.00	0.00	0.00								
	Interoffice Channel Mileage - Additional rate per mile - 9-25 miles			UEPDC	1LNOB	0.0783	0.00	0.00								
	Interoffice Channel Mileage - Fixed rate 25+ miles (Facilities Termination)			UEPDC	1LNO3	0.00	0.00	0.00	0.00							
	Interoffice Channel Mileage - Additional rate per mile - 25+ miles			UEPDC	1LNOC	0.0783	0.00	0.00								
	Local Number Portability, per DS0 Activated			UEPDC	LNPCP	3.15	0.00	0.00	0.00							
	Central Office Termininating Point			UEPDC	CTG	0.00										
4-WIRE DS1 LOOP WITH CHANNELIZATION WITH PORT																
System is 1 DS1 Loop, 1 D4 Channel Bank, and up to 24 Feature Activations																
A system can have various rate combinations based on type and number of ports used																
UNE DS1 Loop																
	4-wire DS1 Loop UNE - Statewide		sw	UEPMG	USLDC	62.71							19.99	19.99		
UNE DSO Channelization Capacities (D4 Channel Bank Configurations)																
	24 DSO Channel Capacity - 1 per DS1			UEPMG	VUM24	123.06	0.00	0.00					19.99	19.99		
	48 DSO Channel Capacity - 1 per 2 DS1s			UEPMG	VUM48	246.12	0.00	0.00					19.99	19.99		
	96 DSO Channel Capacity -1per 4 DS1s			UEPMG	VUM96	492.24	0.00	0.00					19.99	19.99		
	144 DS0 Channel Capacity - 1 per 6 DS1s			UEPMG	VUM14	738.36	0.00	0.00					19.99	19.99		
	192 DS0 Channel Capacity -1 per 8 DS1s			UEPMG	VUM19	984.48	0.00	0.00					19.99	19.99		
	240 DS0 Channel Capacity - 1 per 10 DS1s			UEPMG	VUM20	1,230.60	0.00	0.00					19.99	19.99		
	288 DS0 Channel Capacity - 1 per 12 DS1s			UEPMG	VUM28	1,476.72	0.00	0.00					19.99	19.99		
	384 DS0 Channel Capacity - 1 per 16 DS1s			UEPMG	VUM38	1,968.96	0.00	0.00					19.99	19.99		
	480 DS0 Channel Capacity - 1 per 20 DS1s			UEPMG	VUM40	2,461.20	0.00	0.00					19.99	19.99		

UNBUNDLED NETWORK ELEMENTS - North Carolina													Attachment: 2		Exhibit: B	
CATEGORY	RATE ELEMENTS	Interim	Zone	BCS	USOC	RATES($)					Svc Order Submitted Elec per LSR	Svc Order Submitted Manually per LSR	Incremental Charge - Manual Svc Order vs. Electronic-1st	Incremental Charge - Manual Svc Order vs. Electronic-Add'l	Incremental Charge - Manual Svc Order vs. Electronic-Disc 1st	Incremental Charge - Manual Svc Order vs. Electronic-Disc Add'l
						Rec	Nonrecurring		Nonrecurring Disconnect		OSS Rates($)					
							First	Add'l	First	Add'l	SOMEC	SOMAN	SOMAN	SOMAN	SOMAN	SOMAN
	576 DS0 Channel Capacity -1 per 24 DS1s			UEPMG	VUM57	2,953.44	0.00	0.00					19.99	19.99		
	672 DS0 Channel Capacity - 1 per 28 DS1s			UEPMG	VUM67	3,445.68	0.00	0.00					19.99	19.99		
Non-Recurring Charges (NRC) Associated with 4-Wire DS1 Loop with Channeliztion with Port - Conversion Charge Based on a System																
A Minimum System configuration is One (1) DS1, One (1) D4 Channel Bank, and Up To 24 DSO Ports with Feature Activations.																
Multiples of this configuration functioning as one are considered Add'l after the minimum system configuration is counted.																
	NRC - Conversion (Currently Combined) with or without BellSouth Allowed Changes - Top 8 MSAs Only			UEPMG	USAC4	0.00	330.61	16.64					19.99	19.99		
System Additions Where Currently Combined and New (Not Currently Combined)																
In Top 8 MSAs and AL, FL, and NC Only																
	1 DS1/D4 Channel Bank - Add NRC for each Port and Assoc Fea Activation -			UEPMG	VUMD4	0.00	743.74	326.22	149.02	17.68			19.99	19.99		
Bipolar 8 Zero Substitution																
	Clear Channel Capability Format, superframe - Subsequent Activity Only			UEPMG	CCOSF	0.00	0.00	615.00								
	Clear Channel Capability Format - Extended Superframe - Subsequent Activity Only			UEPMG	CCOEF	0.00	0.00	615.00								
Alternate Mark Inversion (AMI)																
	Superframe Format			UEPMG	MCOSF	0.00	0.00	0.00								
	Extended Superframe Format			UEPMG	MCOPO	0.00	0.00	0.00								
Exchange Ports Associated with 4-Wire DS1 Loop with Channelization with Port																
Exchange Ports																
	Line Side Combination Channelized PBX Trunk Port - Business			UEPPX	UEPCX	14.00	0.00	0.00	0.00	0.00			40.18	9.45		
	Line Side Outward Channelized PBX Trunk Port - Business			UEPPX	UEPOX	14.00	0.00	0.00	0.00	0.00			40.18	9.45		
	Line Side Inward Only Channelized PBX Trunk Port without DID			UEPPX	UEP1X	14.00	0.00	0.00	0.00	0.00			40.18	9.45		
	2-Wire Trunk Side Unbundled Channelized DID Trunk Port			UEPPX	UEPDM	52.00	0.00	0.00	0.00	0.00			40.18	9.45		
Feature Activations - Unbundled Loop Concentration																
	Feature (Service) Activation for each Line Side Port Terminated in D4 Bank			UEPPX	1PQWM	0.65	40.00	20.00	10.00	5.00			40.18	9.45		
	Feature (Service) Activation for each Trunk Side Port Terminated in D4 Bank			UEPPX	1PQWU	0.65	110.00	30.00	75.00	15.00			40.18	9.45		
Telephone Number/ Group Establishment Charges for DID Service																
	DID Trunk Termination (1 per Port)			UEPPX	NDT	0.00	0.00	0.00								
	Estab Trk Grp and Provide 1st 20 DID Nos. (FL,GA, NC,& SC)			UEPPX	NDZ	0.00	0.00	0.00								
	DID Numbers - groups of 20 - Valid all States			UEPPX	ND4	0.00	0.00	0.00								
	Non-Consecutive DID Numbers - per number			UEPPX	ND5	0.00	0.00	0.00								
	Reserve Non-Consecutive DID Numbers			UEPPX	ND6	0.00	0.00	0.00								
	Reserve DID Numbers			UEPPX	NDV	0.00	0.00	0.00								
Local Number Portability																
	Local Number Portability - 1 per port			UEPPX	LNPCP	3.15	0.00	0.00								
FEATURES - Vertical and Optional																
Local Switching Features Offered with Line Side Ports Only																
	All Features Available			UEPPX	UEPVF	3.40	0.00	0.00					40.18	9.45		
UNBUNDLED CENTREX PORT/LOOP COMBINATIONS - COST BASED RATES																
1. Cost Based Rates are applied where BellSouth is required by FCC and/or State Commission rule to provide Unbundled Local Switching or Switch Ports.																
2. Features shall apply to the Unbundled Port/Loop Combination - Cost Based Rate section in the same manner as they are applied to the Stand-Alone Unbundled Port section of this Rate Exhibit.																
3. End Office and Tandem Switching Usage and Common Transport Usage rates in the Port section of this rate exhibit shall apply to all combinations of loop/port network elements except for UNE Coin Port/Loop Combinations.																
For Georgia, Kentucky, Louisiana, MIssissippi and Tennessee, the recurring UNE Port and Loop charges listed apply to Currently Combined and Not Currently Combined Combos. The the first and additional Port nonrecurring charges apply to Not Currently Combined Combos for all states. In GA, KY, LA, MS and TN these nonrecurring charges are commission ordered cost based rates and in AL, FL, NC and SC these nonrecurring charges are Market Rates and are listed in the Market Rate section. For Currently Combined Combos in all other states, the nonrecurring charges shall be those identified in the Nonrecurring - Currently Combined sections.																
5. Market Rates for Unbundled Centrex Port/Loop Combination will be negotiated on an Individual Case Basis, until further notice.																
UNE-P CENTREX - 5ESS (Valid in All States)																
2-Wire VG Loop/2-Wire Voice Grade Port (Centrex) Combo																
UNE Port/Loop Combination Rates (Non-Design)																
	2-Wire VG Loop/2-Wire Voice Grade Port (Centrex) Combo - Non-Design		sw	UEP95		16.46										
UNE Port/Loop Combination Rates (Design)																

UNBUNDLED NETWORK ELEMENTS - North Carolina														Attachment: 2		Exhibit: B	
CATEGORY	RATE ELEMENTS	Interim	Zone	BCS	USOC	RATES($)					Svc Order Submitted Elec per LSR	Svc Order Submitted Manually per LSR	Incremental Charge - Manual Svc Order vs. Electronic-1st	Incremental Charge - Manual Svc Order vs. Electronic-Add'l	Incremental Charge - Manual Svc Order vs. Electronic-Disc 1st	Incremental Charge - Manual Svc Order vs. Electronic-Disc Add'l
						Rec	Nonrecurring		Nonrecurring Disconnect		OSS Rates($)					
							First	Add'l	First	Add'l	SOMEC	SOMAN	SOMAN	SOMAN	SOMAN	SOMAN
	2-Wire VG Loop/2-Wire Voice Grade Port (Centrex) Combo - Design		sw	UEP95		21.78										
UNE Loop Rate																
	2-Wire Voice Grade Loop (SL 1) - Statewide		sw	UEP95	UECS1	14.18										
	2-Wire Voice Grade Loop (SL 2) - Statewide		sw	UEP95	UECS2	19.50										
UNE Port Rate																
All States																
	2-Wire Voice Grade Port (Centrex) Basic Local Area			UEP95	UEPYA	2.28							40.18	9.45		
	2-Wire Voice Grade Port (Centrex 800 termination)			UEP95	UEPYB	2.28							40.18	9.45		
	2-Wire Voice Grade Port (Centrex with Caller ID)1Basic Local Area			UEP95	UEPYH	2.28							40.18	9.45		
	2-Wire Voice Grade Port (Centrex from diff Serving Wire Center)2 Basic Local Area			UEP95	UEPYM	2.28							40.18	9.45		
	2-Wire Voice Grade Port, Diff Serving Wire Center - 800 Service Term - Basic Local Area			UEP95	UEPYZ	2.28							40.18	9.45		
	2-Wire Voice Grade Port terminated in on Megalink or equivalent - Basic Local Area			UEP95	UEPY9	2.28							40.18	9.45		
	2-Wire Voice Grade Port Terminated on 800 Service Term - Basic Local Area			UEP95	UEPY2	2.28							40.18	9.45		
NC Only																
	2-Wire Voice Grade Port (Centrex)			UEP95	UEPUA	2.28							40.18	9.45		
	2-Wire Voice Grade Port (Centrex 800 termination)			UEP95	UEPUB	2.28							40.18	9.45		
	2-Wire Voice Grade Port (Centrex with Caller ID)1			UEP95	UEPUH	2.28							40.18	9.45		
	2-Wire Voice Grade Port (Centrex from diff Serving Wire Center)2			UEP95	UEPUM	2.28							40.18	9.45		
	2-Wire Voice Grade Port, Diff Serving Wire Center - 800 Service Term			UEP95	UEPUZ	2.28							40.18	9.45		
	2-Wire Voice Grade Port terminated in on Megalink or equivalent			UEP95	UEPU9	2.28							40.18	9.45		
	2-Wire Voice Grade Port Terminated on 800 Service Term			UEP95	UEPU2	2.28							40.18	9.45		
Local Switching																
	Centrex Intercom Funtionality, per port			UEP95	URECS	0.903										
Local Number Portability																
	Local Number Portability (1 per port)			UEP95	LNPCC	0.35										
Features																
	All Standard Features Offered, per port			UEP95	UEPVF	3.40										
	All Select Features Offered, per port			UEP95	UEPVS	0.00	457.83									
	All Centrex Control Features Offered, per port			UEP95	UEPVC	3.40										
NARS																
	Unbundled Network Access Register - Combination			UEP95	UARCX	0.00	0.00	0.00					40.18	9.45		
	Unbundled Network Access Register - Indial			UEP95	UAR1X	0.00	0.00	0.00					40.18	9.45		
	Unbundled Network Access Register - Outdial			UEP95	UAROX	0.00	0.00	0.00					40.18	9.45		
Miscellaneous Terminations																
2-Wire Trunk Side																
	Trunk Side Terminations, each			UEP95	CEND6	12.36										
4-Wire Digital (1.544 Megabits)																
	DS1 Circuit Terminations, each			UEP95	M1HD1	186.23							40.18	9.45		
	DS0 Channels Activated, each			UEP95	M1HDO	0.00	28.81						40.18	9.45		
Interoffice Channel Mileage - 2-Wire																
	Interoffice Channel Facilities Termination			UEP95	MIGBC	18.00										
	Interoffice Channel mileage, per mile or fraction of mile			UEP95	MIGBM	0.0282										
Feature Activations (DS0) Centrex Loops on Channelized DS1 Service																
D4 Channel Bank Feature Activations																
	Feature Activation on D-4 Channel Bank Centrex Loop Slot			UEP95	1PQWS	0.65										
	Feature Activation on D-4 Channel Bank FX line Side Loop Slot			UEP95	1PQW6	0.65										
	Feature Activation on D-4 Channel Bank FX Trunk Side Loop Slot			UEP95	1PQW7	0.65										

UNBUNDLED NETWORK ELEMENTS - North Carolina													Attachment: 2		Exhibit: B	
CATEGORY	RATE ELEMENTS	Interim	Zone	BCS	USOC	RATES($)					Svc Order Submitted Elec per LSR	Svc Order Submitted Manually per LSR	Incremental Charge - Manual Svc Order vs. Electronic-1st	Incremental Charge - Manual Svc Order vs. Electronic-Add'l	Incremental Charge - Manual Svc Order vs. Electronic-Disc 1st	Incremental Charge - Manual Svc Order vs. Electronic-Disc Add'l
						Rec	Nonrecurring		Nonrecurring Disconnect		OSS Rates($)					
							First	Add'l	First	Add'l	SOMEC	SOMAN	SOMAN	SOMAN	SOMAN	SOMAN
	Feature Activation on D-4 Channel Bank Centrex Loop Slot - Different Wire Center			UEP95	1PQWP	0.65										
	Feature Activation on D-4 Channel Bank Private Line Loop Slot			UEP95	1PQWV	0.65										
	Feature Activation on D-4 Channel Bank Tjie Line/Trunk Loop Slot			UEP95	1PQWQ	0.65										
	Feature Activation on D-4 Channel Bank WATS Loop Slot			UEP95	1PQWA	0.65										
Non-Recurring Charges (NRC) Associated with UNE-P Centrex																
	NRC Conversion Currently Combined Switch-As-Is with allowed changes, per port			UEP95	USAC2		2.77	0.40					40.18	9.45		
	New Centrex Standard Common Block			UEP95	M1ACS	0.00	695.11						40.18	9.45		
	New Centrex Customized Common Block			UEP95	M1ACC	0.00	695.11						40.18	9.45		
	NAR Establishment Charge, Per Occasion			UEP95	URECA	0.00	72.73						40.18	9.45		
UNE-P CENTREX - DMS100 (Valid in All States)																
2-Wire VG Loop/2-Wire Voice Grade Port (Centrex) Combo																
UNE Port/Loop Combination Rates (Non-Design)																
	2-Wire VG Loop/2-Wire Voice Grade Port (Centrex) Combo - Non-Design		sw	UEP9D		16.46										
UNE Port/Loop Combination Rates (Design)																
	2-Wire VG Loop/2-Wire Voice Grade Port (Centrex) Combo - Design		sw	UEP9D		21.78										
UNE Loop Rate																
	2-Wire Voice Grade Loop (SL 1) - Statewide		sw	UEP9D	UECS1	14.18										
	2-Wire Voice Grade Loop (SL 2) - Statewide		sw	UEP9D	UECS2	19.50										
UNE Port Rate																
ALL STATES																
	2-Wire Voice Grade Port (Centrex) Basic Local Area			UEP9D	UEPYA	2.28							40.18	9.45		
	2-Wire Voice Grade Port (Centrex 800 termination)Basic Local Area			UEP9D	UEPYB	2.28							40.18	9.45		
	2-Wire Voice Grade Port (Centrex / EBS-PSET)3Basic Local Area			UEP9D	UEPYC	2.28							40.18	9.45		
	2-Wire Voice Grade Port (Centrex / EBS-M5009)3Basic Local Area			UEP9D	UEPYD	2.28							40.18	9.45		
	2-Wire Voice Grade Port (Centrex / EBS-M5209))3 Basic Local Area			UEP9D	UEPYE	2.28							40.18	9.45		
	2-Wire Voice Grade Port (Centrex / EBS-M5112))3 Basic Local Area			UEP9D	UEPYF	2.28							40.18	9.45		
	2-Wire Voice Grade Port (Centrex / EBS-M5312))3Basic Local Area			UEP9D	UEPYG	2.28							40.18	9.45		
	2-Wire Voice Grade Port (Centrex / EBS-M5008))3 Basic Local Area			UEP9D	UEPYT	2.28							40.18	9.45		
	2-Wire Voice Grade Port (Centrex / EBS-M5208))3 Basic Local Area			UEP9D	UEPYU	2.28							40.18	9.45		
	2-Wire Voice Grade Port (Centrex / EBS-M5216))3 Basic Local Area			UEP9D	UEPYV	2.28							40.18	9.45		
	2-Wire Voice Grade Port (Centrex / EBS-M5316))3 Basic Local Area			UEP9D	UEPY3	2.28							40.18	9.45		
	2-Wire Voice Grade Port (Centrex with Caller ID) Basic Local Area			UEP9D	UEPYH	2.28							40.18	9.45		
	2-Wire Voice Grade Port (Centrex/Caller ID/Msg Wtg Lamp Indication))3 Basic Local Area			UEP9D	UEPYW	2.28							40.18	9.45		
	2-Wire Voice Grade Port (Centrex/Msg Wtg Lamp Indication))3 Basic Local Area			UEP9D	UEPYJ	2.28							40.18	9.45		
	2-Wire Voice Grade Port (Centrex from diff Serving Wire Center) 2 Basic Local Area			UEP9D	UEPYM	2.28							40.18	9.45		
	2-Wire Voice Grade Port (Centrex/differ SWC /EBS-PSET)2, 3 Basic Local Area			UEP9D	UEPYO	2.28							40.18	9.45		
	2-Wire Voice Grade Port (Centrex/differ SWC /EBS-M5009)2, 3 Basic Local Area			UEP9D	UEPYP	2.28							40.18	9.45		

CATEGORY		RATE ELEMENTS	Interim	Zone	BCS	USOC	RATES($)					Svc Order Submitted Elec per LSR	Svc Order Submitted Manually per LSR	Incremental Charge - Manual Svc Order vs. Electronic-1st	Incremental Charge - Manual Svc Order vs. Electronic-Add'l	Incremental Charge - Manual Svc Order vs. Electronic-Disc 1st	Incremental Charge - Manual Svc Order vs. Electronic-Disc Add'l
							Rec	Nonrecurring		Nonrecurring Disconnect		OSS Rates($)					
								First	Add'l	First	Add'l	SOMEC	SOMAN	SOMAN	SOMAN	SOMAN	SOMAN
		2-Wire Voice Grade Port (Centrex/differ SWC /EBS-5209)2, 3 Basic Local Area			UEP9D	UEPYQ	2.28							40.18	9.45		
		2-Wire Voice Grade Port (Centrex/differ SWC /EBS-M5112)2, 3 Basic Local Area			UEP9D	UEPYR	2.28							40.18	9.45		
		2-Wire Voice Grade Port (Centrex/differ SWC /EBS-M5312)2, 3 Basic Local Area			UEP9D	UEPYS	2.28							40.18	9.45		
		2-Wire Voice Grade Port (Centrex/differ SWC /EBS-M5008)2, 3 Basic Local Area			UEP9D	UEPY4	2.28							40.18	9.45		
		2-Wire Voice Grade Port (Centrex/differ SWC /EBS-M5208)2, 3 Basic Local Area			UEP9D	UEPY5	2.28							40.18	9.45		
		2-Wire Voice Grade Port (Centrex/differ SWC /EBS-M5216)2, 3 Basic Local Area			UEP9D	UEPY6	2.28							40.18	9.45		
		2-Wire Voice Grade Port (Centrex/differ SWC /EBS-M5316)2, 3 Basic Local Area			UEP9D	UEPY7	2.28							40.18	9.45		
		2-Wire Voice Grade Port, Diff Serving Wire Center - 800 Service Term			UEP9D	UEPYZ	2.28							40.18	9.45		
		2-Wire Voice Grade Port terminated in on Megalink or equivalent Basic Local Area			UEP9D	UEPY9	2.28							40.18	9.45		
		2-Wire Voice Grade Port Terminated on 800 Service Term Basic Local Area			UEP9D	UEPY2	2.28							40.18	9.45		
	NC Only																
		2-Wire Voice Grade Port (Centrex)			UEP9D	UEPUA	2.28							40.18	9.45		
		2-Wire Voice Grade Port (Centrex 800 termination)			UEP9D	UEPUB	2.28							40.18	9.45		
		2-Wire Voice Grade Port (Centrex / EBS-PSET)3			UEP9D	UEPUC	2.28							40.18	9.45		
		2-Wire Voice Grade Port (Centrex / EBS-M5009)3			UEP9D	UEPUD	2.28							40.18	9.45		
		2-Wire Voice Grade Port (Centrex / EBS-M5209)3			UEP9D	UEPUE	2.28							40.18	9.45		
		2-Wire Voice Grade Port (Centrex / EBS-M5112)3			UEP9D	UEPUF	2.28							40.18	9.45		
		2-Wire Voice Grade Port (Centrex / EBS-M5312)3			UEP9D	UEPUG	2.28							40.18	9.45		
		2-Wire Voice Grade Port (Centrex / EBS-M5008)3			UEP9D	UEPUT	2.28							40.18	9.45		
		2-Wire Voice Grade Port (Centrex / EBS-M5208)3			UEP9D	UEPUU	2.28							40.18	9.45		
		2-Wire Voice Grade Port (Centrex / EBS-M5216)3			UEP9D	UEPUV	2.28							40.18	9.45		
		2-Wire Voice Grade Port (Centrex / EBS-M5316)3			UEP9D	UEPU3	2.28							40.18	9.45		
		2-Wire Voice Grade Port (Centrex with Caller ID)			UEP9D	UEPUH	2.28							40.18	9.45		
		2-Wire Voice Grade Port (Centrex/Caller ID/Msg Wtg Lamp Indication)3			UEP9D	UEPUW	2.28							40.18	9.45		
		2-Wire Voice Grade Port (Centrex/Msg Wtg Lamp Indication)3			UEP9D	UEPUJ	2.28							40.18	9.45		
		2-Wire Voice Grade Port (Centrex from diff Serving Wire Center) 2			UEP9D	UEPUM	2.28							40.18	9.45		
		2-Wire Voice Grade Port (Centrex/differ SWC /EBS-PSET)2, 3			UEP9D	UEPUO	2.28							40.18	9.45		
		2-Wire Voice Grade Port (Centrex/differ SWC /EBS-M5009)2, 3			UEP9D	UEPUP	2.28							40.18	9.45		
		2-Wire Voice Grade Port (Centrex/differ SWC /EBS-5209)2, 3			UEP9D	UEPUQ	2.28							40.18	9.45		
		2-Wire Voice Grade Port (Centrex/differ SWC /EBS-M5112)2, 3			UEP9D	UEPUR	2.28							40.18	9.45		
		2-Wire Voice Grade Port (Centrex/differ SWC /EBS-M5312)2, 3			UEP9D	UEPUS	2.28							40.18	9.45		
		2-Wire Voice Grade Port (Centrex/differ SWC /EBS-M5008)2, 3			UEP9D	UEPU4	2.28							40.18	9.45		
		2-Wire Voice Grade Port (Centrex/differ SWC /EBS-M5208)2, 3			UEP9D	UEPU5	2.28							40.18	9.45		
		2-Wire Voice Grade Port (Centrex/differ SWC /EBS-M5216)2, 3			UEP9D	UEPU6	2.28							40.18	9.45		
		2-Wire Voice Grade Port (Centrex/differ SWC /EBS-M5316)2, 3			UEP9D	UEPU7	2.28							40.18	9.45		
		2-Wire Voice Grade Port, Diff Serving Wire Center - 800 Service Term			UEP9D	UEPUZ	2.28							40.18	9.45		
		2-Wire Voice Grade Port terminated in on Megalink or equivalent			UEP9D	UEPU9	2.28							40.18	9.45		
		2-Wire Voice Grade Port Terminated on 800 Service Term			UEP9D	UEPU2	2.28							40.18	9.45		

UNBUNDLED NETWORK ELEMENTS - North Carolina													Attachment: 2		Exhibit: B	
CATEGORY	RATE ELEMENTS	Interim	Zone	BCS	USOC	RATES($)					Svc Order Submitted Elec per LSR	Svc Order Submitted Manually per LSR	Incremental Charge - Manual Svc Order vs. Electronic-1st	Incremental Charge - Manual Svc Order vs. Electronic-Add'l	Incremental Charge - Manual Svc Order vs. Electronic-Disc 1st	Incremental Charge - Manual Svc Order vs. Electronic-Disc Add'l
						Rec	Nonrecurring		Nonrecurring Disconnect		OSS Rates($)					
							First	Add'l	First	Add'l	SOMEC	SOMAN	SOMAN	SOMAN	SOMAN	SOMAN
Local Switching																
	Centrex Intercom Funtionality, per port			UEP9D	URECS	0.903										
Local Number Portability																
	Local Number Portability (1 per port)			UEP9D	LNPCC	0.35										
Features																
	All Standard Features Offered, per port			UEP9D	UEPVF	3.40										
	All Select Features Offered, per port			UEP9D	UEPVS	0.00	457.83						40.18	9.45		
	All Centrex Control Features Offered, per port			UEP9D	UEPVC	3.40										
NARS																
	Unbundled Network Access Register - Combination			UEP9D	UARCX	0.00	0.00	0.00					40.18	9.45		
	Unbundled Network Access Register - Inward			UEP9D	UAR1X	0.00	0.00	0.00					40.18	9.45		
	Unbundled Network Access Register - Outdial			UEP9D	UAROX	0.00	0.00	0.00					40.18	9.45		
Miscellaneous Terminations																
2-Wire Trunk Side																
	Trunk Side Terminations, each			UEP9D	CEND6	12.36										
4-Wire Digital (1.544 Megabits)																
	DS1 Circuit Terminations, each			UEP9D	M1HD1	186.23										
	DS0 Channels Activiated per Channel			UEP9D	M1HDO	0.00	28.81						40.18	9.45		
													40.18	9.45		
Interoffice Channel Mileage - 2-Wire																
	Interoffice Channel Facilities Termination			UEP9D	MIGBC	18.00										
	Interoffice Channel mileage, per mile or fraction of mile			UEP9D	MIGBM	0.0282										
Feature Activations (DS0) Centrex Loops on Channelized DS1 Service																
D4 Channel Bank Feature Activations																
	Feature Activation on D-4 Channel Bank Centrex Loop Slot			UEP9D	1PQWS	0.65										
	Feature Activation on D-4 Channel Bank FX line Side Loop Slot			UEP9D	1PQW6	0.65										
	Feature Activation on D-4 Channel Bank FX Trunk Side Loop Slot			UEP9D	1PQW7	0.65										
	Feature Activation on D-4 Channel Bank Centrex Loop Slot - Different Wire Center			UEP9D	1PQWP	0.65										
	Feature Activation on D-4 Channel Bank Private Line Loop Slot			UEP9D	1PQWV	0.65										
	Feature Activation on D-4 Channel Bank Tjie Line/Trunk Loop Slot			UEP9D	1PQWQ	0.65										
	Feature Activation on D-4 Channel Bank WATS Loop Slot			UEP9D	1PQWA	0.65										
Non-Recurring Charges (NRC) Associated with UNE-P Centrex																
	NRC Conversion Currently Combined Switch-As-Is with allowed changes, per port			UEP9D	USAC2		2.77	0.40					40.18	9.45		
	New Centrex Standard Common Block			UEP9D	M1ACS	0.00	695.11						40.18	9.45		
	New Centrex Customized Common Block			UEP9D	M1ACC	0.00	695.11						40.18	9.45		
	NAR Establishment Charge, Per Occasion			UEP9D	URECA	0.00	72.73						40.18	9.45		
4-Wire Digital (1.544 Megabits)																
Note 1 - Required Port for Centrex Control in 1AESS, 5ESS & EWSD																
Note 2 - Requres Interoffice Channel Mileage																
Note 3 - Requires Specific Customer Premises Equipment																
NOTE: Rates displaying an "R" in Interim column are interim and subject to rate true-up as set forth in General Terms and Conditions.																

UNBUNDLED NETWORK ELEMENTS - South Carolina													Attachment: 2		Exhibit: B	
CATEGORY	RATE ELEMENTS	Interim	Zone	BCS	USOC	RATES($)					Svc Order Submitted Elec per LSR	Svc Order Submitted Manually per LSR	Incremental Charge - Manual Svc Order vs. Electronic-1st	Incremental Charge - Manual Svc Order vs. Electronic-Add'l	Incremental Charge - Manual Svc Order vs. Electronic-Disc 1st	Incremental Charge - Manual Svc Order vs. Electronic-Disc Add'l
						Rec	Nonrecurring		Nonrecurring Disconnect		OSS Rates($)					
							First	Add'l	First	Add'l	SOMEC	SOMAN	SOMAN	SOMAN	SOMAN	SOMAN
OPERATIONAL SUPPORT SYSTEMS																
	NOTE: (1) Electronic Service Order: CLEC should contact its contract negotiator if it prefers the state specific electronic service ordering charges as ordered by the State Commissions. The electronic service ordering charge currently contained in this rate exhibit is the BellSouth regional electronic service ordering charge. CLEC may elect either the state specific Commission ordered rates for the electronic service ordering charges, or CLEC may elect the regional electronic service ordering charge.															
	NOTE: (2) Any element that can be ordered electronically will be billed according to the SOMEC rate listed in this category. Please refer to BellSouth's Business Rules for Local Ordering (BBR-LO) to determine if a product can be ordered electronically. For those elements that cannot be ordered electronically at present per the BBR-LO, the listed SOMEC rate in this category reflects the charge that would be billed to a CLEC once electronic ordering capabilities come on-line for that element. Otherwise, the manual ordering charge, SOMAN, will be applied to a CLECs bill when it submits an LSR to BellSouth.															
	Manual Service Order Charge, per LSR, Disconnect Only (SC)				SOMAN				1.97							
	Electronic OSS Charge, per LSR, submitted via BST's OSS interactive interfaces (Regional)				SOMEC		3.50									
UNBUNDLED EXCHANGE ACCESS LOOP																
2-WIRE ANALOG VOICE GRADE LOOP																
	2-Wire Analog Voice Grade Loop - Service Level 1- Zone 1		1	UEANL	UEAL2	14.94	37.92	17.62	23.56	5.32		15.69				
	2-Wire Analog Voice Grade Loop - Service Level 1- Zone 2		2	UEANL	UEAL2	21.39	37.92	17.62	23.56	5.32		15.69				
	2-Wire Analog Voice Grade Loop - Service Level 1- Zone 3		3	UEANL	UEAL2	26.72	37.92	17.62	23.56	5.32		15.69				
	Loop Testing - Basic 1st Half Hour			UEANL	URET1		34.23	34.23				15.69				
	Loop Testing - Basic Additional Half Hour			UEANL	URETA		19.90	19.90				15.69				
	CLEC to CLEC Conversion Charge Without Outside Dispatch (UVL-SL1)			UEANL	UREWO		15.81	8.96				15.69				
	Engineering Information Document (EI)			UEANL			13.47	13.47								
	Manual Order Coordination for UVL-SL1s (per loop)			UEANL	UEAMC		8.17	8.17								
	Order Coordination for Specified Conversion Time for UVL-SL1 (per LSR)			UEANL	OCOSL		18.13	18.13								
2-WIRE Unbundled COPPER LOOP																
	2-Wire Unbundled Copper Loop - Non-Designed Zone 1	I	1	UEQ	UEQ2X	12.94	36.40	16.10	22.66	4.42		15.69				
	2 Wire Unbundled Copper Loop - Non-Designed - Zone 2	I	2	UEQ	UEQ2X	14.51	36.40	16.10	22.66	4.42		15.69				
	2 Wire Unbundled Copper Loop - Non-Designed - Zone 3	I	3	UEQ	UEQ2X	15.02	36.40	16.10	22.66	4.42		15.69				
	Order Coordination 2 Wire Unbundled Copper Loop - Non-Designed (per loop)			UEQ	USBMC		8.17	8.17				15.69				
	Engineering Information Document			UEQ			13.47	13.47				15.69				
	Loop Testing - Basic 1st Half Hour			UEQ	URET1		34.23	34.23				15.69				
	Loop Testing - Basic Additional Half Hour			UEQ	URETA		19.90	19.90				15.69				
	CLEC to CLEC Conversion Charge Without Outside Dispatch (UCL-ND)			UEQ	UREWO		14.30	7.45				15.69				
UNBUNDLED EXCHANGE ACCESS LOOP																
2-WIRE ANALOG VOICE GRADE LOOP																
	2 Wire Analog Voice Grade Loop-Service Level 1-Line Splitting-Zone 1		1	UEPSR UEPSB	UEALS	14.94	37.92	17.62	23.56	5.32		15.69				
	2 Wire Analog Voice Grade Loop-Service Level 1-Line Splitting-Zone 1		1	UEPSR UEPSB	UEABS	14.94	37.92	17.62	23.56	5.32		15.69				
	2 Wire Analog Voice Grade Loop- Service Level 1-Line Splitting-Zone 2		2	UEPSR UEPSB	UEALS	21.39	37.92	17.62	23.56	5.32		15.69				
	2 Wire Analog Voice Grade Loop- Service Level 1-Line Splitting-Zone 2		2	UEPSR UEPSB	UEABS	21.39	37.92	17.62	23.56	5.32		15.69				
	2 Wire Analog Voice Grade Loop-Service Level 1-Line Splitting-Zone 3		3	UEPSR UEPSB	UEALS	26.72	37.92	17.62	23.56	5.32		15.69				
	2 Wire Analog Voice Grade Loop-Service Level 1-Line Splitting-Zone 3		3	UEPSR UEPSB	UEABS	26.72	37.92	17.62	23.56	5.32		15.69				
UNBUNDLED EXCHANGE ACCESS LOOP																
2-WIRE ANALOG VOICE GRADE LOOP																
	2-Wire Analog Voice Grade Loop - Service Level 2 w/Loop or Ground Start Signaling - Zone 1		1	UEA	UEAL2	16.68	105.98	68.43	53.05	10.61		15.69				
	2-Wire Analog Voice Grade Loop - Service Level 2 w/Loop or Ground Start Signaling - Zone 2		2	UEA	UEAL2	23.13	105.98	68.43	53.05	10.61		15.69				
	2-Wire Analog Voice Grade Loop - Service Level 2 w/Loop or Ground Start Signaling - Zone 3		3	UEA	UEAL2	28.46	105.98	68.43	53.05	10.61		15.69				
	Order Coordination for Specified Conversion Time (per LSR)			UEA	OCOSL		18.13									
	2-Wire Analog Voice Grade Loop - Service Level 2 w/Reverse Battery Signaling - Zone 1		1	UEA	UEAR2	16.68	105.98	68.43	53.05	10.61		15.69				

CATEGORY	RATE ELEMENTS	Interim	Zone	BCS	USOC	RATES($) Rec	Nonrecurring First	Nonrecurring Add'l	Nonrecurring Disconnect First	Nonrecurring Disconnect Add'l	Svc Order Submitted Elec per LSR	Svc Order Submitted Manually per LSR	Incremental Charge - Manual Svc Order vs. Electronic-1st	Incremental Charge - Manual Svc Order vs. Electronic-Add'l	Incremental Charge - Manual Svc Order vs. Electronic-Disc 1st	Incremental Charge - Manual Svc Order vs. Electronic-Disc Add'l
											OSS Rates($)					
							First	Add'l	First	Add'l	SOMEC	SOMAN	SOMAN	SOMAN	SOMAN	SOMAN
	2-Wire Analog Voice Grade Loop - Service Level 2 w/Reverse Battery Signaling - Zone 2		2	UEA	UEAR2	23.13	105.98	68.43	53.05	10.61		15.69				
	2-Wire Analog Voice Grade Loop - Service Level 2 w/Reverse Battery Signaling - Zone 3		3	UEA	UEAR2	28.46	105.98	68.43	53.05	10.61		15.69				
	Order Coordination for Specified Conversion Time (per LSR)			UEA	OCOSL		18.13									
	CLEC to CLEC Conversion Charge without outside dispatch			UEA	UREWO		87.90	36.44				15.69				
4-WIRE ANALOG VOICE GRADE LOOP																
	4-Wire Analog Voice Grade Loop - Zone 1		1	UEA	UEAL4	32.59	132.38	94.83	59.35	14.61		15.69				
	4-Wire Analog Voice Grade Loop - Zone 2		2	UEA	UEAL4	43.89	132.38	94.83	59.35	14.61		15.69				
	4-Wire Analog Voice Grade Loop - Zone 3		3	UEA	UEAL4	43.38	132.38	94.83	59.35	14.61		15.69				
	Order Coordination for Specified Conversion Time (per LSR)			UEA	OCOSL		18.13									
	CLEC to CLEC Conversion Charge without outside dispatch			UEA	UREWO		87.90	36.44				15.69				
2-WIRE ISDN DIGITAL GRADE LOOP																
	2-Wire ISDN Digital Grade Loop - Zone 1		1	UDN	U1L2X	25.21	117.58	80.03	53.05	10.61		15.69				
	2-Wire ISDN Digital Grade Loop - Zone 2		2	UDN	U1L2X	32.76	117.58	80.03	53.05	10.61		15.69				
	2-Wire ISDN Digital Grade Loop - Zone 3		3	UDN	U1L2X	37.70	117.58	80.03	53.05	10.61		15.69				
	Order Coordination For Specified Conversion Time (per LSR)			UDN	OCOSL		18.13									
	CLEC to CLEC Conversion Charge without outside dispatch			UDN	UREWO		91.82	44.25				15.69				
2-WIRE Universal Digital Channel (UDC) COMPATIBLE LOOP																
	2-Wire Universal Digital Channel (UDC) Compatible Loop - Zone 1		1	UDC	UDC2X	25.21	117.58	80.03	53.05	10.61		15.69				
	2-Wire Universal Digital Channel (UDC) Compatible Loop - Zone 2		2	UDC	UDC2X	32.76	117.58	80.03	53.05	10.61		15.69				
	2-Wire Universal Digital Channel (UDC) Compatible Loop - Zone 3		3	UDC	UDC2X	37.70	117.58	80.03	53.05	10.61		15.69				
	CLEC to CLEC Conversion Charge without outside dispatch			UDC	UREWO		91.82	44.25				15.69				
2-WIRE ASYMMETRICAL DIGITAL SUBSCRIBER LINE (ADSL) COMPATIBLE LOOP																
	2 Wire Unbundled ADSL Loop including manual service inquiry & facility reservation - Zone 1		1	UAL	UAL2X	12.19	120.84	70.56	50.37	7.93		15.69				
	2 Wire Unbundled ADSL Loop including manual service inquiry & facility reservation - Zone 2		2	UAL	UAL2X	13.71	120.84	70.56	50.37	7.93		15.69				
	2 Wire Unbundled ADSL Loop including manual service inquiry & facility reservation - Zone 3		3	UAL	UAL2X	14.14	120.84	70.56	50.37	7.93		15.69				
	Order Coordination for Specified Conversion Time (per LSR)			UAL	OCOSL		18.13									
	2 Wire Unbundled ADSL Loop without manual service inquiry & facility reservaton - Zone 1		1	UAL	UAL2W	12.19	95.81	57.82	50.37	7.93		15.69				
	2 Wire Unbundled ADSL Loop without manual service inquiry & facility reservaton - Zone 2		2	UAL	UAL2W	13.71	95.81	57.82	50.37	7.93		15.69				
	2 Wire Unbundled ADSL Loop without manual service inquiry & facility reservaton - Zone 3		3	UAL	UAL2W	14.14	95.81	57.82	50.37	7.93		15.69				
	Order Coordination for Specified Conversion Time (per LSR)			UAL	OCOSL		18.13									
	CLEC to CLEC Conversion Charge without outside dispatch			UAL	UREWO		86.38	40.48				15.69				
2-WIRE HIGH BIT RATE DIGITAL SUBSCRIBER LINE (HDSL) COMPATIBLE LOOP																
	2 Wire Unbundled HDSL Loop including manual service inquiry & facility reservation - Zone 1		1	UHL	UHL2X	9.58	129.52	79.24	50.37	7.93		15.69				
	2 Wire Unbundled HDSL Loop including manual service inquiry & facility reservation - Zone 2		2	UHL	UHL2X	10.92	129.52	79.24	50.37	7.93		15.69				
	2 Wire Unbundled HDSL Loop including manual service inquiry & facility reservation - Zone 3		3	UHL	UHL2X	11.40	129.52	79.24	50.37	7.93		15.69				
	Order Coordination for Specified Conversion Time (per LSR)			UHL	OCOSL		18.13									
	2 Wire Unbundled HDSL Loop without manual service inquiry and facility reservation - Zone 1		1	UHL	UHL2W	9.58	104.49	66.50	50.37	7.93		15.69				
	2 Wire Unbundled HDSL Loop without manual service inquiry and facility reservation - Zone 2		2	UHL	UHL2W	10.92	104.49	66.50	50.37	7.93		15.69				
	2 Wire Unbundled HDSL Loop without manual service inquiry and facility reservation - Zone 3		3	UHL	UHL2W	11.40	104.49	66.50	50.37	7.93		15.69				
	Order Coordination for Specified Conversion Time (per LSR)			UHL	OCOSL		18.13									
	CLEC to CLEC Conversion Charge without outside dispatch			UHL	UREWO		86.32	40.48				15.69				
4-WIRE HIGH BIT RATE DIGITAL SUBSCRIBER LINE (HDSL) COMPATIBLE LOOP																

CATEGORY	RATE ELEMENTS	Interim	Zone	BCS	USOC	RATES($)					Svc Order Submitted Elec per LSR	Svc Order Submitted Manually per LSR	Incremental Charge - Manual Svc Order vs. Electronic-1st	Incremental Charge - Manual Svc Order vs. Electronic-Add'l	Incremental Charge - Manual Svc Order vs. Electronic-Disc 1st	Incremental Charge - Manual Svc Order vs. Electronic-Disc Add'l
						Rec	Nonrecurring		Nonrecurring Disconnect		OSS Rates($)					
							First	Add'l	First	Add'l	SOMEC	SOMAN	SOMAN	SOMAN	SOMAN	SOMAN
	4 Wire Unbundled HDSL Loop including manual service inquiry and facility reservation - Zone 1		1	UHL	UHL4X	16.02	158.18	107.89	55.12	10.38		15.69				
	4-Wire Unbundled HDSL Loop including manual service inquiry and facility reservation - Zone 2		2	UHL	UHL4X	14.33	158.18	107.89	55.12	10.38		15.69				
	4-Wire Unbundled HDSL Loop including manual service inquiry and facility reservation - Zone 3		3	UHL	UHL4X	16.84	158.18	107.89	55.12	10.38		15.69				
	Order Coordination for Specified Conversion Time (per LSR)			UHL	OCOSL		18.13									
	4-Wire Unbundled HDSL Loop without manual service inquiry and facility reservation - Zone 1		1	UHL	UHL4W	16.02	133.14	95.16	55.12	10.38		15.69				
	4-Wire Unbundled HDSL Loop without manual service inquiry and facility reservation - Zone 2		2	UHL	UHL4W	14.33	133.14	95.16	55.12	10.38		15.69				
	4-Wire Unbundled HDSL Loop without manual service inquiry and facility reservation - Zone 3		3	UHL	UHL4W	16.84	133.14	95.16	55.12	10.38		15.69				
	Order Coordination for Specified Conversion Time (per LSR)			UHL	OCOSL		18.13									
	CLEC to CLEC Conversion Charge without outside dispatch			UHL	UREWO		86.32	40.48				15.69				
4-WIRE DS1 DIGITAL LOOP																
	4-Wire DS1 Digital Loop - Zone 1		1	USL	USLXX	79.51	253.03	157.89	44.80	11.73		15.69				
	4-Wire DS1 Digital Loop - Zone 2		2	USL	USLXX	136.00	253.03	157.89	44.80	11.73		15.69				
	4-Wire DS1 Digital Loop - Zone 3		3	USL	USLXX	229.15	253.03	157.89	44.80	11.73		15.69				
	Order Coordination for Specified Conversion Time (per LSR)			USL	OCOSL		18.13									
	CLEC to CLEC Conversion Charge without outside dispatch			USL	UREWO		101.30	43.13				15.69				
4-WIRE 19.2, 56 OR 64 KBPS DIGITAL GRADE LOOP																
	4 Wire Unbundled Digital 19.2 Kbps		1	UDL	UDL19	29.93	126.66	89.12	59.35	14.61		15.69				
	4 Wire Unbundled Digital 19.2 Kbps		2	UDL	UDL19	33.99	126.66	89.12	59.35	14.61		15.69				
	4 Wire Unbundled Digital 19.2 Kbps		3	UDL	UDL19	34.74	126.66	89.12	59.35	14.61		15.69				
	4 Wire Unbundled Digital Loop 56 Kbps - Zone 1		1	UDL	UDL56	29.93	126.66	89.12	59.35	14.61		15.69				
	4 Wire Unbundled Digital Loop 56 Kbps - Zone 2		2	UDL	UDL56	33.99	126.66	89.12	59.35	14.61		15.69				
	4 Wire Unbundled Digital Loop 56 Kbps - Zone 3		3	UDL	UDL56	34.74	126.66	89.12	59.35	14.61		15.69				
	Order Coordination for Specified Conversion Time (per LSR)			UDL	OCOSL		18.13									
	4 Wire Unbundled Digital Loop 64 Kbps - Zone 1		1	UDL	UDL64	29.93	126.66	89.12	59.35	14.61		15.69				
	4 Wire Unbundled Digital Loop 64 Kbps - Zone 2		2	UDL	UDL64	33.99	126.66	89.12	59.35	14.61		15.69				
	4 Wire Unbundled Digital Loop 64 Kbps - Zone 3		3	UDL	UDL64	34.74	126.66	89.12	59.35	14.61		15.69				
	Order Coordination for Specified Conversion Time (per LSR)			UDL	OCOSL		18.13									
	CLEC to CLEC Conversion Charge without outside dispatch			UDL	UREWO		102.34	49.85				15.69				
2-WIRE Unbundled COPPER LOOP																
	2-Wire Unbundled Copper Loop/Short including manual service inquiry & facility reservation - Zone 1		1	UCL	UCLPB	12.19	119.91	69.62	50.37	7.93		15.69				
	2-Wire Unbundled Copper Loop/Short including manual service inquiry & facility reservation - Zone 2		2	UCL	UCLPB	13.71	119.91	69.62	50.37	7.93		15.69				
	2 Wire Unbundled Copper Loop/Short including manual service inquiry & facility reservation - Zone 3		3	UCL	UCLPB	14.14	119.91	69.62	50.37	7.93		15.69				
	Order Coordination for Unbundled Copper Loops (per loop)			UCL	UCLMC		8.17	8.17								
	2-Wire Unbundled Copper Loop/Short without manual service inquiry and facility reservation - Zone 1		1	UCL	UCLPW	12.19	94.87	56.89	50.37	7.93		15.69				
	2-Wire Unbundled Copper Loop/Short without manual service inquiry and facility reservation - Zone 2		2	UCL	UCLPW	13.71	94.87	56.89	50.37	7.93		15.69				
	2-Wire Unbundled Copper Loop/Short without manual service inquiry and facility reservation - Zone 3		3	UCL	UCLPW	14.14	94.87	56.89	50.37	7.93		15.69				
	Order Coordination for Unbundled Copper Loops (per loop)			UCL	UCLMC		8.17	8.17								
	2-Wire Unbundled Copper Loop/Long - includes manual srvc. inquiry and facility reservation - Zone 1		1	UCL	UCL2L	38.22	119.91	69.62	50.37	7.93		15.69				
	2-Wire Unbundled Copper Loop/Long - includes manual svc. inquiry and facility reservation - Zone 2		2	UCL	UCL2L	55.33	119.91	69.62	50.37	7.93		15.69				
	2-Wire Unbundled Copper Loop/Long - includes manual svc. inquiry and facility reservation - Zone 3		3	UCL	UCL2L	67.95	119.91	69.62	50.37	7.93		15.69				
	Order Coordination for Unbundled Copper Loops (per loop)			UCL	UCLMC		8.17	8.17								
	2-Wire Unbundled Copper Loop/Long - without manual service inquiry and facility reservation - Zone 1		1	UCL	UCL2W	38.22	94.87	56.89	50.37	7.93		15.69				

UNBUNDLED NETWORK ELEMENTS - South Carolina														Attachment: 2		Exhibit: B	
CATEGORY		RATE ELEMENTS	Interim	Zone	BCS	USOC	RATES($)					Svc Order Submitted Elec per LSR	Svc Order Submitted Manually per LSR	Incremental Charge - Manual Svc Order vs. Electronic-1st	Incremental Charge - Manual Svc Order vs. Electronic-Add'l	Incremental Charge - Manual Svc Order vs. Electronic-Disc 1st	Incremental Charge - Manual Svc Order vs. Electronic-Disc Add'l
							Rec	Nonrecurring		Nonrecurring Disconnect		OSS Rates($)					
								First	Add'l	First	Add'l	SOMEC	SOMAN	SOMAN	SOMAN	SOMAN	SOMAN
		2-Wire Unbundled Copper Loop/Long - without manual service inquiry and facility reservation - Zone 2		2	UCL	UCL2W	55.33	94.87	56.89	50.37	7.93		15.69				
		2-Wire Unbundled Copper Loop/Long - without manual service inquiry and facility reservation - Zone 3		3	UCL	UCL2W	67.95	94.87	56.89	50.37	7.93		15.69				
		Order Coordination for Unbundled Copper Loops (per loop)			UCL	UCLMC		8.17	8.17								
		CLEC to CLEC Conversion Charge without outside dispatch (UCL-Des)			UCL	UREWO		94.87	42.57				15.69				
	4-WIRE COPPER LOOP																
		4-Wire Copper Loop/Short - including manual service inquiry and facility reservation - Zone 1		1	UCL	UCL4S	19.64	144.17	93.88	55.12	10.38		15.69				
		4-Wire Copper Loop/Short - including manual service inquiry and facility reservation - Zone 2		2	UCL	UCL4S	20.90	144.17	93.88	55.12	10.38		15.69				
		4-Wire Copper Loop/Short - including manual service inquiry and facility reservation - Zone 3		3	UCL	UCL4S	19.34	144.17	93.88	55.12	10.38		15.69				
		Order Coordination for Unbundled Copper Loops (per loop)			UCL	UCLMC		8.17	8.17								
		4-Wire Copper Loop/Short - without manual service inquiry and facility reservation - Zone 1		1	UCL	UCL4W	19.64	119.13	81.15	55.12	10.38		15.69				
		4-Wire Copper Loop/Short - without manual service inquiry and facility reservation - Zone 2		2	UCL	UCL4W	20.90	119.13	81.15	55.12	10.38		15.69				
		4-Wire Copper Loop/Short - without manual service inquiry and facility reservation - Zone 3		3	UCL	UCL4W	19.34	119.13	81.15	55.12	10.38		15.69				
		Order Coordination for Unbundled Copper Loops (per loop)			UCL	UCLMC		8.17	8.17								
		4-Wire Unbundled Copper Loop/Long - includes manual svc. inquiry and facility reservation - Zone 1		1	UCL	UCL4L	77.29	144.17	93.88	55.12	10.38		15.69				
		4-Wire Unbundled Copper Loop/Long - includes manual svc. inquiry and facility reservation - Zone 2		2	UCL	UCL4L	118.78	144.17	93.88	55.12	10.38		15.69				
		4-Wire Unbundled Copper Loop/Long - includes manual svc. inquiry and facility reservation - Zone 3		3	UCL	UCL4L	144.10	144.17	93.88	55.12	10.38		15.69				
		Order Coordination for Unbundled Copper Loops (per loop)			UCL	UCLMC		8.17	8.17								
		4-Wire Unbundled Copper Loop/Long - without manual svc. inquiry and facility reservation - Zone 1		1	UCL	UCL4O	77.29	119.44	81.45	55.12	10.38		15.69				
		4-Wire Unbundled Copper Loop/Long - without manual svc. inquiry and facility reservation - Zone 2		2	UCL	UCL4O	118.78	119.44	81.45	55.12	10.38		15.69				
		4-Wire Unbundled Copper Loop/Long - without manual svc. inquiry and facility reservation - Zone 3		3	UCL	UCL4O	144.10	119.44	81.45	55.12	10.38		15.69				
		Order Coordination for Unbundled Copper Loops (per loop)			UCL	UCLMC		8.17	8.17								
		CLEC to CLEC Conversion Charge without outside dispatch (UCL-Des)			UCL	UREWO		94.87	42.57				15.69				
LOOP MODIFICATION																	
		Unbundled Loop Modification, Removal of Load Coils - 2 Wire pair less than or equal to 18k ft			UAL, UHL, UCL, UEQ, ULS, UEA, UEANL, UDL, UDC, UDN, UDL, USL	ULM2L		32.46	32.46				15.69				
		Unbundled Loop Modification, Removal of Load Coils - 2 wire greater than 18k ft			UCL, ULS	ULM2G		170.89	170.89				15.69				
		Unbundled Loop Modification Removal of Load Coils - 4 Wire less than or equal to 18K ft			UHL, UCL	ULM4L		32.46	32.46				15.69				
		Unbundled Loop Modification Removal of Load Coils - 4 Wire pair greater than 18k ft			UCL	ULM4G		170.89	170.89				15.69				
		Unbundled Loop Modification Removal of Bridged Tap Removal, per unbundled loop			UAL, UHL, UCL, UEQ, UEF, ULS, UEA, UEANL, UDL, UDC, UDN, UDL, USL	ULMBT		32.48	32.48				15.69				
SUB-LOOPS																	
	Sub-Loop Distribution																
		Sub-Loop - Per Cross Box Location - CLEC Feeder Facility Set-Up	I		UEANL	USBSA		241.42	241.42				15.69				

UNBUNDLED NETWORK ELEMENTS - South Carolina														Attachment: 2		Exhibit: B	
CATEGORY		RATE ELEMENTS	Interim	Zone	BCS	USOC	RATES($)					Svc Order Submitted Elec per LSR	Svc Order Submitted Manually per LSR	Incremental Charge - Manual Svc Order vs. Electronic-1st	Incremental Charge - Manual Svc Order vs. Electronic-Add'l	Incremental Charge - Manual Svc Order vs. Electronic-Disc 1st	Incremental Charge - Manual Svc Order vs. Electronic-Disc Add'l
							Rec	Nonrecurring		Nonrecurring Disconnect		OSS Rates($)					
								First	Add'l	First	Add'l	SOMEC	SOMAN	SOMAN	SOMAN	SOMAN	SOMAN
		Sub-Loop - Per Cross Box Location - Per 25 Pair Panel Set-Up	I		UEANL	USBSB		22.69	22.69				15.69				
		Sub-Loop - Per Building Equipment Room - CLEC Feeder Facility Set-Up	I		UEANL	USBSC		177.84	177.84				15.69				
		Sub-Loop - Per Building Equipment Room - Per 25 Pair Panel Set-Up	I		UEANL	USBSD		55.58	55.58				15.69				
		Sub-Loop Distribution Per 2-Wire Analog Voice Grade Loop - Zone 1	I	1	UEANL	USBN2	8.87	65.94	31.03	45.35	6.71		15.69				
		Sub-Loop Distribution Per 2-Wire Analog Voice Grade Loop - Zone 2	I	2	UEANL	USBN2	12.58	65.94	31.03	45.35	6.71		15.69				
		Sub-Loop Distribution Per 2-Wire Analog Voice Grade Loop - Zone 3	I	3	UEANL	USBN2	14.79	65.94	31.03	45.35	6.71		15.69				
		Order Coordination for Unbundled Sub-Loops, per sub-loop pair			UEANL	USBMC		8.17	8.17								
		Sub-Loop Distribution Per 4-Wire Analog Voice Grade Loop - Zone 1		1	UEANL	USBN4	14.11	79.21	44.29	49.82	9.09		15.69				
		Sub-Loop Distribution Per 4-Wire Analog Voice Grade Loop - Zone 2		2	UEANL	USBN4	19.40	79.21	44.29	49.82	9.09		15.69				
		Sub-Loop Distribution Per 4-Wire Analog Voice Grade Loop - Zone 3		3	UEANL	USBN4	18.90	79.21	44.29	49.82	9.09		15.69				
		Order Coordination for Unbundled Sub-Loops, per sub-loop pair			UEANL	USBMC		8.17	8.17								
		Sub-Loop 2-Wire Intrabuilding Network Cable (INC)	I		UEANL	USBR2	2.41	53.13	18.21	45.35	6.71		15.69				
		Order Coordination for Unbundled Sub-Loops, per sub-loop pair			UEANL	USBMC		8.17	8.17								
		Sub-Loop 4-Wire Intrabuilding Network Cable (INC)	I		UEANL	USBR4	5.36	59.38	24.47	49.82	9.09		15.69				
		Order Coordination for Unbundled Sub-Loops, per sub-loop pair			UEANL	USBMC		8.17	8.17								
		2 Wire Copper Unbundled Sub-Loop Distribution - Zone 1	I	1	UEF	UCS2X	7.11	65.94	31.03	45.35	6.71		15.69				
		2 Wire Copper Unbundled Sub-Loop Distribution - Zone 2	I	2	UEF	UCS2X	9.83	65.94	31.03	45.35	6.71		15.69				
		2 Wire Copper Unbundled Sub-Loop Distribution - Zone 3	I	3	UEF	UCS2X	10.48	65.94	31.03	45.35	6.71		15.69				
		Order Coordination for Unbundled Sub-Loops, per sub-loop pair			UEF	USBMC		8.17	8.17								
		4 Wire Copper Unbundled Sub-Loop Distribution - Zone 1	I	1	UEF	UCS4X	7.85	79.21	44.29	49.82	9.09		15.69				
		4 Wire Copper Unbundled Sub-Loop Distribution - Zone 2	I	2	UEF	UCS4X	14.17	79.21	44.29	49.82	9.09		15.69				
		4 Wire Copper Unbundled Sub-Loop Distribution - Zone 3	I	3	UEF	UCS4X	12.64	79.21	44.29	49.82	9.09		15.69				
		Order Coordination for Unbundled Sub-Loops, per sub-loop pair			UEF	USBMC		8.17	8.17								
	Unbundled Sub-Loop Modification																
		Unbundled Sub-Loop Modification - 2-W Copper Dist Load Coil/Equip Removal per 2-W PR			UEF	ULM2X		176.17	5.11				15.69				
		Unbundled Sub-loop Modification - 4-W Copper Dist Load Coil/Equip Removal per 4-W PR			UEF	ULM4X		176.17	5.11				15.69				
		Unbundled Sub-loop Modification - 2-w/4-w Copper Dist Bridged Tap Removal, per PR unloaded			UEF	ULM4T		278.82	6.13				15.69				
	Unbundled Network Terminating Wire (UNTW)																
		Unbundled Network Terminating Wire (UNTW) per Pair			UENTW	UENPP	0.3303	30.20	30.20				15.69				
	Network Interface Device (NID)																
		Network Interface Device (NID) - 1-2 lines			UENTW	UND12		43.68	28.79				15.69				
		Network Interface Device (NID) - 1-6 lines			UENTW	UND16		64.42	49.53				15.69				
		Network Interface Device Cross Connect - 2 W			UENTW	UNDC2		5.92	5.92				15.69				
		Network Interface Device Cross Connect - 4W			UENTW	UNDC4		5.92	5.92				15.69				
SUB-LOOPS																	
	Sub-Loop Feeder																
		USL-Feeder, DS0 Set-up per Cross Box location - CLEC Distribution Facility set-up			UEA, UDN,UCL,UDL,UDC	USBFW		241.42					15.69				
		USL Feeder - DS0 Set-up per Cross Box location - per 25 pair set-up			UEA, UDN,UCL,UDL,UDC	USBFX		22.69	22.69				15.69				
		USL Feeder DS1 Set-up at DSX location, per DS1 termination			USL	USBFZ		523.87	11.34				15.69				

CATEGORY		RATE ELEMENTS	Interim	Zone	BCS	USOC	RATES($)					Svc Order Submitted Elec per LSR	Svc Order Submitted Manually per LSR	Incremental Charge - Manual Svc Order vs. Electronic-1st	Incremental Charge - Manual Svc Order vs. Electronic-Add'l	Incremental Charge - Manual Svc Order vs. Electronic-Disc 1st	Incremental Charge - Manual Svc Order vs. Electronic-Disc Add'l
							Rec	Nonrecurring		Nonrecurring Disconnect		OSS Rates($)					
								First	Add'l	First	Add'l	SOMEC	SOMAN	SOMAN	SOMAN	SOMAN	SOMAN
		Unbundled Sub-Loop Feeder Loop, 2 Wire Ground Start, Voice Grade - Zone 1		1	UEA	USBFA	8.93	93.28	56.69	54.68	13.74		15.69				
		Unbundled Sub-Loop Feeder Loop, 2 Wire Ground-Start, Voice Grade - Zone 2		2	UEA	USBFA	11.74	93.28	56.69	54.68	13.74		15.69				
		Unbundled Sub-Loop Feeder Loop, Per 2 Wire Ground-Start, Voice Grade - Zone 3		3	UEA	USBFA	14.74	93.28	56.69	54.68	13.74		15.69				
		Order Coordination for Specified Conversion Time, per LSR			UEA	OCOSL		18.13									
		Unbundlde Sub-Loop Feeder Loop, 2 Wire Loop-Start, Voice Grade - Zone 1		1	UEA	USBFB	8.93	93.28	56.69	54.68	13.74		15.69				
		Unbundled Sub-Loop Feeder Loop, 2 Wire Loop-Start, Voice Grade - Zone 2		2	UEA	USBFB	11.74	93.28	56.69	54.68	13.74		15.69				
		Unbundled Sub-Loop Feeder Loop, 2 Wire Start Loop, Voice Grade - Zone 3		3	UEA	USBFB	14.74	93.28	56.69	54.68	13.74		15.69				
		Order Coordination for Specified Time Conversion, per LSR			UEA	OCOSL		18.13									
		Unbundled Sub-Loop Feeder Loop, 2 Wire Reverse Battery, Voice Grade - Zone 1		1	UEA	USBFC	8.93	93.28	56.69	54.68	13.74		15.69				
		Unbundled Sub-Loop Feeder Loop, 2 Wire Reverse Battery, Voice Grade - Zone 2		2	UEA	USBFC	11.74	93.28	56.69	54.68	13.74		15.69				
		Unbundled Sub-Loop Feeder Loop, 2 Wire Analog Reverse Battery, Voice Grade - Zone 3		3	UEA	USBFC	14.74	93.28	56.69	54.68	13.74		15.69				
		Order Coordination For Specified Conversion Time, per LSR			UEA	OCOSL		18.13									
		Unbundled Sub-Loop Feeder Loop, 4 Wire Ground-Start, Voice Grade - Zone 1		1	UEA	USBFD	21.63	107.91	70.36	62.26	17.52		15.69				
		Unbundled Sub-Loop Feeder Loop, 4 Wire Ground-Start, Voice Grade - Zone 2		2	UEA	USBFD	27.57	107.91	70.36	62.26	17.52		15.69				
		Unbundled Sub-Loop Feeder Loop, 4 Wire Ground Start, Voice Grade - Zone 3		3	UEA	USBFD	26.04	107.91	70.36	62.26	17.52		15.69				
		Order Coordination For Specified Conversion Time, Per LSR			UEA	OCOSL		18.13									
		Unbundled Sub-Loop Feeder Loop, 4 Wire Loop-Start, Voice Grade - Zone 1		1	UEA	USBFE	21.63	107.91	70.36	62.26	17.52		15.69				
		Unbundled Sub-Loop Feeder Loop, 4 Wire Loop-Start, Voice Grade - Zone 2		2	UEA	USBFE	27.57	107.91	70.36	62.26	17.52		15.69				
		Unbundled Sub-Loop Feeder Loop, 4 Wire Loop-Start, Voice Grade - Zone 3		3	UEA	USBFE	26.04	107.91	70.36	62.26	17.52		15.69				
		Order Coordination For Specified Conversion Time, Per LSR			UEA	OCOSL		18.13									
		Unbundled Sub-Loop Feeder Loop, 2 Wire ISDN BRI - Zone 1		1	UDN	USBFF	17.05	106.47	68.92	55.81	13.37		15.69				
		Unbundled Sub-Loop Feeder Loop, 2-Wire ISDN BRI - Zone 2		2	UDN	USBFF	20.92	106.47	68.92	55.81	13.37		15.69				
		Unbundled Sub-Loop Feeder Loop, 2-Wire ISDN BRI - Zone 3		3	UDN	USBFF	23.49	106.47	68.92	55.81	13.37		15.69				
		Order Coordination For Specified Conversion Time, Per LSR			UDN	OCOSL		18.13									
		Unbundled Sub-Loop Feeder, 2 Wire UDC (IDSL compatible)		1	UDC	USBFS	17.05	106.47	68.92	55.81	13.37		15.69				
		Unbundled Sub-Loop Feeder, 2 Wire UDC (IDSL compatible)		2	UDC	USBFS	20.92	106.47	68.92	55.81	13.37		15.69				
		Unbundled Sub-Loop Feeder, 2 Wire UDC (IDSL compatible)		3	UDC	USBFS	23.49	106.47	68.92	55.81	13.37		15.69				
		Unbundled Sub-Loop Feeder Loop, 4-Wire DS1 - Zone 1		1	USL	USBFG	55.85	102.19	64.64	62.26	17.52		15.69				
		Unbundled Sub-Loop Feeder Loop, 4-Wire DS1 - Zone 2		2	USL	USBFG	109.16	102.19	64.64	62.26	17.52		15.69				
		Unbundled Sub-Loop Feeder Loop, 4-Wire DS1 - Zone 3		3	USL	USBFG	203.35	102.19	64.64	62.26	17.52		15.69				
		Order Coordination For Specified Conversion Time, Per LSR			USL	OCOSL		18.13									
		Unbundled Sub-Loop Feeder, 2-Wire Copper Loop - Zone 1		1	UCL	USBFH	5.98	83.97	46.42	53.14	10.69		15.69				
		Unbundled Sub-Loop Feeder Loop, 2-Wire Copper Loop - Zone 2		2	UCL	USBFH	4.80	83.97	46.42	53.14	10.69		15.69				
		Unbundled Sub-Loop Feeder Loop, 2-Wire Copper Loop - Zone 3		3	UCL	USBFH	4.59	83.97	46.42	53.14	10.69		15.69				
		Order Coordination For Specified Conversion Time, per LSR			UCL	OCOSL		18.13									
		Sub-Loop Feeder - Per 4-Wire Copper Loop - Zone 1		1	UCL	USBFJ	13.21	101.22	63.67	58.03	13.29		15.69				
		Sub-Loop Feeder - Per 4-Wire Copper Loop - Zone 2		2	UCL	USBFJ	8.28	101.22	63.67	58.03	13.29		15.69				
		Sub-Loop Feeder - Per 4-Wire Copper Loop - Zone 3		3	UCL	USBFJ	8.42	101.22	63.67	58.03	13.29		15.69				
		Order Coordination For Specified Conversion Time, per LSR			UCL	OCOSL		18.13									
		Sub-Loop Feeder - Per 4-Wire 19.2 Kbps Digital Grade Loop		1	UDL	USBFN	21.02	102.19	64.64	62.26	17.52		15.69				
		Sub-Loop Feeder - Per 4-Wire 19.2 Kbps Digital Grade Loop		2	UDL	USBFN	21.30	102.19	64.64	62.26	17.52		15.69				
		Sub-Loop Feeder - Per 4-Wire 19.2 Kbps Digital Grade Loop		3	UDL	USBFN	20.17	102.19	64.64	62.26	17.52		15.69				

CATEGORY	RATE ELEMENTS	Interim	Zone	BCS	USOC	RATES($) Rec	Nonrecurring First	Nonrecurring Add'l	Nonrecurring Disconnect First	Nonrecurring Disconnect Add'l	Svc Order Submitted Elec per LSR	Svc Order Submitted Manually per LSR	Incremental Charge - Manual Svc Order vs. Electronic-1st	Incremental Charge - Manual Svc Order vs. Electronic-Add'l	Incremental Charge - Manual Svc Order vs. Electronic-Disc 1st	Incremental Charge - Manual Svc Order vs. Electronic-Disc Add'l
											OSS Rates($)					
											SOMEC	SOMAN	SOMAN	SOMAN	SOMAN	SOMAN
	Sub-Loop Feeder - Per 4-Wire 56 Kbps Digital Grade Loop - Zone 1		1	UDL	USBFO	21.02	102.19	64.64	62.26	17.52		15.69				
	Sub-Loop Feeder - Per 4-Wire 56 Kbps Digital Grade Loop - Zone 2		2	UDL	USBFO	21.30	102.19	64.64	62.26	17.52		15.69				
	Sub-Loop Feeder - Per 4-Wire 56 Kbps Digital Grade Loop - Zone 3		3	UDL	USBFO	20.17	102.19	64.64	62.26	17.52		15.69				
	Order Coordination For Specified Time Conversion, per LSR			UDL	OCOSL		18.13									
	Sub-Loop Feeder - Per 4-Wire 64 Kbps Digital Grade Loop - Zone 1		1	UDL	USBFP	21.02	102.19	64.64	62.26	17.52		15.69				
	Sub-Loop Feeder - Per 4-Wire 64 Kbps Digital Grade Loop - Zone 2		2	UDL	USBFP	21.30	102.19	64.64	62.26	17.52		15.69				
	Sub-Loop Feeder - Per 4-Wire 64 Kbps Digital Grade Loop - Zone 3		3	UDL	USBFP	20.17	102.19	64.64	62.26	17.52		15.69				
	Order Coordination For Specified Conversion Time, per LSR			UDL	OCOSL		18.13									
SUB-LOOPS																
Sub-Loop Feeder																
	Sub Loop Feeder - DS3 - Per Mile Per Month	I		UE3	1L5SL	20.44										
	Sub Loop Feeder - DS3 - Facility Termination Per Month	I		UE3	USBF1	348.12	3,392.00	407.90	160.83	91.17		15.69				
	Sub Loop Feeder – STS-1 – Per Mile Per Month	I		UDLSX	1L5SL	20.44										
	Sub Loop Feeder - STS-1 - Facility Termination Per Month	I		UDLSX	USBF7	369.07	3,392.00	407.90	160.83	91.17		15.69				
	Sub Loop Feeder – OC-3 – Per Mile Per Month	I		UDLO3	1L5SL	15.51										
	Sub Loop Feeder - OC-3 - Facility Termination Protection Per Month	I		UDLO3	USBF5	56.04										
	Sub Loop Feeder - OC-3 - Facility Termination Per Month	I		UDLO3	USBF2	565.50	3,392.00	407.90	160.83	91.17		15.69				
	Sub Loop Feeder - OC-12 - Per Mile Per Month	I		UDL12	1L5SL	19.08										
	Sub Loop Feeder - OC-12 - Facility Termination Protection Per Month	I		UDL12	USBF6	669.82										
	Sub Loop Feeder - OC-12 - Facility Termination Per Month	I		UDL12	USBF3	1,840.00	3,392.00	407.90	160.83	91.17		15.69				
	Sub Loop Feeder - OC-48 - Per Mile Per Month	I		UDL48	1L5SL	62.60										
	Sub Loop Feeder - OC-48 - Facility Termination Protection Per Month	I		UDL48	USBF9	326.16										
	Sub Loop Feeder - OC-48 - Facility Termination Per Month	I		UDL48	USBF4	1,560.00	3,578.00	407.90	160.83	91.17		15.69				
	Sub Loop Feeder - OC-12 Interface On OC-48	I		UDL48	USBF8	366.86	789.85	407.90	160.83	91.17		15.69				
UNBUNDLED LOOP CONCENTRATION																
	Unbundled Loop Concentration - System A (TR008)			ULC	UCT8A	318.73	326.13	326.13				15.69				
	Unbundled Loop Concentration - System B (TR008)			ULC	UCT8B	46.69	135.89	135.89				15.69				
	Unbundled Loop Concentration - System A (TR303)			ULC	UCT3A	351.78	326.13	326.13				15.69				
	Unbundled Loop Concentration - System B (TR303)			ULC	UCT3B	78.67	135.89	135.89				15.69				
	Unbundled Loop Concentration - DS1 Loop Interface Card			ULC	UCTCO	4.42	63.43	46.18	16.83	4.71		15.69				
	Unbundled Loop Concentration - ISDN Loop Interface (Brite Card)			UDN	ULCC1	7.02	10.56	10.50	5.41	5.37		15.69				
	Unbundled Loop Concentration - UDC Loop Interface (Brite Card)			UDC	ULCCU	7.02	10.56	10.50	5.41	5.37		15.69				
	Unbundled Loop Concentration - -2 Wire Voice-Loop Start or Ground Start Loop Interface (POTS Card)			UEA	ULCC2	1.75	10.56	10.50	5.41	5.37		15.69				
	Unbundled Loop Concentration - 2 Wire Voice - Reverse Battery Loop Interface (SPOTS Card)			UEA	ULCCR	10.42	10.56	10.50	5.41	5.37		15.69				
	Unbundled Loop Concentration - 4 Wire Voice Loop Interface (Specials Card)			UEA	ULCC4	6.22	10.56	10.50	5.41	5.37		15.69				
	Unbundled Loop Concentration - TEST CIRCUIT Card			ULC	UCTTC	30.38	10.56	10.50	5.41	5.37		15.69				
	Unbundled Loop Concentration - Digital 19.2 Kbps Data Loop Interface			UDL	ULCC7	9.21	10.56	10.50	5.41	5.37		15.69				
	Unbundled Loop Concentration - Digital 56 Kbps Data Loop Interface			UDL	ULCC5	9.21	10.56	10.50	5.41	5.37		15.69				
	Unbundled Loop Concentration - Digital 64 Kbps Data Loop Interface			UDL	ULCC6	9.21	10.56	10.50	5.41	5.37		15.69				
UNE OTHER, PROVISIONING ONLY - NO RATE																
	NID - Dispatch and Service Order for NID installation			UENTW	UNDBX											
	UNTW Circuit Id Establishment, Provisioning Only - No Rate			UENTW	UENCE											

UNBUNDLED NETWORK ELEMENTS - South Carolina														Attachment: 2		Exhibit: B	
CATEGORY		RATE ELEMENTS	Interim	Zone	BCS	USOC	RATES($)					Svc Order Submitted Elec per LSR	Svc Order Submitted Manually per LSR	Incremental Charge - Manual Svc Order vs. Electronic-1st	Incremental Charge - Manual Svc Order vs. Electronic-Add'l	Incremental Charge - Manual Svc Order vs. Electronic-Disc 1st	Incremental Charge - Manual Svc Order vs. Electronic-Disc Add'l
							Rec	Nonrecurring		Nonrecurring Disconnect		OSS Rates($)					
								First	Add'l	First	Add'l	SOMEC	SOMAN	SOMAN	SOMAN	SOMAN	SOMAN
		Unbundled Contract Name, Provisioning Only - No Rate			UEANL,UEF,UEQ,UENTW	UNECN											
UNE OTHER, PROVISIONING ONLY - NO RATE																	
		Unbundled Contact Name, Provisioning Only - no rate			UAL,UCL,UDC,UDL,UDN,UEA,UHL,ULC	UNECN	0.00	0.00									
		Unbundled Sub-Loop Feeder-2 Wire Cross Box Jumper - no rate			UEA,UDN,UCL,UDC	USBFQ	0.00	0.00									
		Unbundled Sub-Loop Feeder-4 Wire Cross Box Jumper - no rate			UEA,USL,UCL,UDL	USBFR	0.00	0.00									
		Unbundled DS1 Loop - Superframe Format Option - no rate			USL	CCOSF	0.00	0.00									
		Unbundled DS1 Loop - Expanded Superframe Format option - no rate			USL	CCOEF	0.00	0.00									
HIGH CAPACITY UNBUNDLED LOCAL LOOP																	
		High Capacity Unbundled Local Loop - DS3 - Per Mile per month			UE3	1L5ND	12.26										
		High Capacity Unbundled Local Loop - DS3 - Facility Termination per month			UE3	UE3PX	306.36	452.52	264.53	119.75	83.77		15.69				
		High Capacity Unbundled Local Loop - STS-1 - Per Mile per month			UDLSX	1L5ND	12.26						15.69				
		High Capacity Unbundled Local Loop - STS-1 - Facility Termination per month			UDLSX	UDLS1	313.49	452.52	264.53	119.75	83.77		15.69				
LOOP MAKE-UP																	
		Loop Makeup - Preordering Without Reservation, per working or spare facility queried (Manual).			UMK	UMKLW		24.04	24.04								
		Loop Makeup - Preordering With Reservation, per spare facility queried (Manual).			UMK	UMKLP		25.49	25.49								
		Loop Makeup--With or Without Reservation, per working or spare facility queried (Mechanized)			UMK	PSUMK		0.34	0.34								
HIGH FREQUENCY SPECTRUM																	
	SPLITTERS-CENTRAL OFFICE BASED																
		Line Sharing Splitter, per System 96 Line Capacity			ULS	ULSDA	216.22	189.21	0.00	178.38	0.00		15.69				
		Line Sharing Splitter, per System 24 Line Capacity			ULS	ULSDB	54.05	189.21	0.00	178.38	0.00		15.69				
		Line Sharing Splitter, Per System, 8 Line Capacity	I		ULS	ULSD8	18.02	189.21	0.00	178.38	0.00		15.69				
		Line Sharing-DLEC Owned Splitter in CO-CFA activaton-deactivation (per LSOD)			ULS	ULSDG		86.67		49.95			15.69				
	END USER ORDERING-CENTRAL OFFICE BASED-HIGH FREQUENCY SPECTRUM AKA LINE SHARING																
		Line Sharing - per Line Activation (BST owned Splitter)			ULS	ULSDC	0.61	18.55	10.62	10.04	4.93		15.69				
		Line Sharing - per Subsequent Activity per Line Rearrangement(BST Owned Splitter)			ULS	ULSDS		16.42	8.21				15.69				
		Line Sharing - per Subsequent Activity per Line Rearrangement(DLEC Owned Splitter)			ULS	ULSCS		16.42	8.21				15.69				
		Line Sharing - per Line Activation (DLEC owned Splitter)	I		ULS	ULSCC	0.61	47.44	19.31	20.67	12.74		15.69				
		Line Splitting - per line activation DLEC owned splitter	I		UEPSR UEPSB	UREOS	0.61										
		Line Splitting - per line activation BST owned - physical	I		UEPSR UEPSB	UREBP	0.644	37.09	21.24	20.07	9.85		15.69				
		Line Splitting - per line activation BST owned - virtual	I		UEPSR UEPSB	UREBV	0.642	37.09	21.24	20.07	9.85		15.69				
UNBUNDLED DEDICATED TRANSPORT																	
	NOTE: INTEROFFICE CHANNEL DEDICATED TRANSPORT - minimum billing period - below DS3=one month, DS3/STS-1=four months																
	INTEROFFICE CHANNEL - DEDICATED TRANSPORT																
		Interoffice Channel - Dedicated Transport - 2-Wire Voice Grade - Per Mile per month			U1TVX	1L5XX	0.0167										
		Interoffice Channel - Dedicated Transport- 2- Wire Voice Grade - Facility Termination per month			U1TVX	U1TV2	24.30	40.63	27.47	16.77	6.91		15.69				
		Interoffice Channel - Dedicated Transpor t- 2-Wire Voice Grade Rev Bat. - Per Mile per month			U1TVX	1L5XX	0.0167										
		Interoffice Channel - Dedicated Transport- 2- Wire VG Rev Bat. - Facility Termination per month			U1TVX	U1TR2	24.30	40.63	27.47	16.77	6.91		15.69				
		Interoffice Channel - Dedicated Transport - 4-Wire Voice Grade - Per Mile per month			U1TVX	1L5XX	0.0167										

UNBUNDLED NETWORK ELEMENTS - South Carolina														Attachment: 2		Exhibit: B	
CATEGORY		RATE ELEMENTS	Interim	Zone	BCS	USOC	RATES($)					Svc Order Submitted Elec per LSR	Svc Order Submitted Manually per LSR	Incremental Charge - Manual Svc Order vs. Electronic-1st	Incremental Charge - Manual Svc Order vs. Electronic-Add'l	Incremental Charge - Manual Svc Order vs. Electronic-Disc 1st	Incremental Charge - Manual Svc Order vs. Electronic-Disc Add'l
							Rec	Nonrecurring		Nonrecurring Disconnect		OSS Rates($)					
								First	Add'l	First	Add'l	SOMEC	SOMAN	SOMAN	SOMAN	SOMAN	SOMAN
		Interoffice Channel - Dedicated Transport - 4- Wire Voice Grade - Facility Termination per month			U1TVX	U1TV4	21.29	40.63	27.47	16.77	6.91		15.69				
		Interoffice Channel - Dedicated Transport - 56 kbps - per mile per month			U1TDX	1L5XX	0.0167										
		Interoffice Channel - Dedicated Transport - 56 kbps - Facility Termination per month			U1TDX	U1TD5	16.76	40.63	27.47	16.77	6.91		15.69				
		Interoffice Channel - Dedicated Transport - 64 kbps - per mile per month			U1TDX	1L5XX	0.0167										
		Interoffice Channel - Dedicated Transport - 64 kbps - Facility Termination per month			U1TDX	U1TD6	16.76	40.63	27.47	16.77	6.91		15.69				
		Interoffice Channel - Dedicated Channel - DS1 - Per Mile per month			U1TD1	1L5XX	0.3415										
		Interoffice Channel - Dedicated Tranport - DS1 - Facility Termination per month			U1TD1	U1TF1	77.14	89.47	81.99	16.39	14.48		15.69				
		Interoffice Channel - Dedicated Transport - DS3 - Per Mile per month			U1TD3	1L5XX	8.02										
		Interoffice Channel - Dedicated Transport - DS3 - Facility Termination per month			U1TD3	U1TF3	880.65	279.37	163.12	60.33	58.59		15.69				
		Interoffice Channel - Dedicated Transport - STS-1 - Per Mile per month			U1TS1	1L5XX	8.02										
		Interoffice Channel - Dedicated Transport - STS-1 - Facility Termination per month			U1TS1	U1TFS	880.55	279.37	163.12	60.33	58.59		15.69				
	LOCAL CHANNEL - DEDICATED TRANSPORT																
	NOTE: LOCAL CHANNEL DEDICATED TRANSPORT - minimum billing period - below DS3=one month, DS3/STS-1=four months																
		Local Channel - Dedicated - 2-Wire Voice Grade Per Month			ULDVX	ULDV2	15.33	193.53	33.24	36.72	3.21		15.69				
		Local Channel - Dedicated - 2-Wire Voice Grade Rev Bat per month			ULDVX	ULDR2	15.33	193.53	33.24	36.72	3.21		15.69				
		Local Channel - Dedicated - 4-Wire Voice Grade per month			UNDVX	ULDV4	16.54	193.97	33.68	37.19	3.68		15.69				
		Local Channel - Dedicated - DS1 per month - Zone 1		1	ULDD1	ULDF1	42.62	177.87	154.06	22.24	15.30		15.69				
		Local Channel - Dedicated - DS1 per month - Zone 2		2	ULDD1	ULDF1	70.32	177.87	154.06	22.24	15.30		15.69				
		Local Channel - Dedicated - DS1 per month - Zone 3		3	ULDD1	ULDF1	190.68	177.87	154.06	22.24	15.30		15.69				
		Local Channel - Dedicated - DS3 - Per Mile per month			ULDD3	1L5NC	11.93										
		Interoffice Channel - Dedicated Transport - DS3 - Facility Termination per month			U1TD3	U1TF3	446.00	452.52	264.53	119.75	83.77		15.69				
		Local Channel - Dedicated - STS-1- Per Mile per month			ULDS1	1L5NC	11.93										
		Local Channel - Dedicated - STS-1 - Facility Termination per month			ULDS1	ULDFS	435.10	452.52	264.53	119.75	83.77		15.69				
MULTIPLEXERS																	
		Channelization - DS1 to DS0 Channel System			UXTD1	MQ1	107.57	91.24	62.71	10.56	9.81		15.69				
		OCU-DP COCI (data) - DS1 to DS0 Channel System - per month (2.4-64kbs)			UDL	1D1DD	1.19	6.59	4.73				15.69				
		2-wire ISDN COCI (BRITE) - DS1 to DS0 Channel Systsem - per month			UDN	UC1CA	2.56	6.59	4.73				15.69				
		Voice Grade COCI - DS1 to DS0 Channel System - per month			UEA	1D1VG	0.56	6.59	4.73				15.69				
		DS3 to DS1 Channel System per month			UXTD3	MQ3	144.02	178.54	94.18	33.33	31.90		15.69				
		STS1 to DS1 Channel System per month			UXTS1	MQ3	144.02	178.54	94.18	33.33	31.90		15.69				
		DS3 Interface Unit (DS1 COCI) used with Loop per month			USL	UC1D1	8.64	6.59	4.73				15.69				
		DS3 Interface Unit (DS1 COCI) used with Local Channel per month			ULDD1	UC1D1	8.64	6.59	4.73				15.69				
		DS3 Interface Unit (DS1 COCI) used with Interoffice Channel per month			U1TD1	UC1D1	8.64	6.59	4.73				15.69				
DARK FIBER																	
		Dark Fiber, Four Fiber Strands, Per Route Mile or Fraction Thereof per month - Local Channel			UDF	1L5DC	97.65										
		NRC Dark Fiber - Local Channel			UDF	UDFC4		640.51	138.17	317.76	198.11		15.69				
		Dark Fiber, Four Fiber Strands, Per Route Mile or Fraction Thereof per month - Interoffice Channel			UDF	1L5DF	36.41										
		NRC Dark Fiber - Interoffice Channel			UDF	UDF14		640.51	138.17	317.76	198.11		15.69				

UNBUNDLED NETWORK ELEMENTS - South Carolina														Attachment: 2		Exhibit: B	
CATEGORY		RATE ELEMENTS	Interim	Zone	BCS	USOC	RATES($)					Svc Order Submitted Elec per LSR	Svc Order Submitted Manually per LSR	Incremental Charge - Manual Svc Order vs. Electronic-1st	Incremental Charge - Manual Svc Order vs. Electronic-Add'l	Incremental Charge - Manual Svc Order vs. Electronic-Disc 1st	Incremental Charge - Manual Svc Order vs. Electronic-Disc Add'l
							Rec	Nonrecurring		Nonrecurring Disconnect		OSS Rates($)					
								First	Add'l	First	Add'l	SOMEC	SOMAN	SOMAN	SOMAN	SOMAN	SOMAN
		Dark Fiber, Four Fiber Strands, Per Route Mile or Fraction Thereof per month - Local Loop			UDF	1L5DL	97.65										
		NRC Dark Fiber - Local Loop			UDF	UDFL4		640.51	138.17	317.76	198.11		15.69				
TRANSPORT OTHER																	
	Optional Features & Functions:																
8XX ACCESS TEN DIGIT SCREENING																	
		8XX Access Ten Digit Screening, Per Call			OHD		0.0006673										
		8XX Access Ten Digit Screening, Reservation Charge Per 8XX Number Reserved			OHD	N8R1X		2.59	0.44				15.69				
		8XX Access Ten Digit Screening, Per 8XX No. Established W/O POTS Translations			OHD			5.95	0.81	4.58	0.54		15.69				
		8XX Access Ten Digit Screening, Per 8XX No. Established With POTS Translations			OHD	N8FTX		5.95	0.81	4.58	0.54		15.69				
		8XX Access Ten Digit Screening, Customized Area of Service Per 8XX Number			OHD	N8FCX		2.59	1.30				15.69				
		8XX Access Ten Digit Screening, Multiple InterLATA CXR Routing Per CXR Requested Per 8XX No.			OHD	N8FMX		3.03	1.74				15.69				
		8XX Access Ten Digit Screening, Change Charge Per Request			OHD	N8FAX		3.03	0.44				15.69				
		8XX Access Ten Digit Screening, Call Handling and Destination Features			OHD	N8FDX		2.59	2.59				15.69				
		8XX Access Ten Digit Screening, w/ 8XX No. Delivery			OHD		0.0006673										
		8XX Access Ten Digit Screening, w/ POTS No. Delivery			OHD		0.0006673										
LINE INFORMATION DATA BASE ACCESS (LIDB)																	
		LIDB Common Transport Per Query			OQT		0.0000246										
		LIDB Validation Per Query			OQU		0.0138158										
		LIDB Originating Point Code Establishment or Change			OQT, OQU	NRPBX		34.40		42.18			15.69				
SIGNALING (CCS7)																	
		CCS7 Signaling Connection, Per 56 Kbps Facility			UDB	TPP++	16.93	35.61	35.61	16.48	16.48						
		CCS7 Signaling Termination, Per STP Port			UDB	PT8SX	163.49										
		CCS7 Signaling Usage, Per TCAP Message			UDB		0.0000692										
		CCS7 Signaling Connection, Per link (A link)			UDB	TPP++	16.93	35.61	35.61	16.48	16.48		15.69				
		CCS7 Signaling Connection, Per link (B link) (also known as D link)			UDB	TPP++	16.93	35.61	35.61	16.48	16.48		15.69				
		CCS7 Signaling Usage, Per ISUP Message			UDB		0.0000173										
		CCS7 Signaling Usage Surrogate, per link per LATA			UDB	STU56	791.37										
		CCS7 Signaling Point Code, per Originating Point Code Establishment or Change, per STP affected			UDB	CCAPO		29.08	29.08	35.65	35.65		15.69				
		CCS7 Signaling Point Code, per Destination Point Code Establishment or Change, Per Stp Affected			UDB	CCAPD		29.08	29.08	35.65	35.65		15.69				
E911 SERVICE																	
		Local Channel - Dedicated - 2-wr Voice Grade					15.33	193.53	33.24	36.72	3.21		15.69				
		Interoffice Transport - Dedicated - 2-wr Voice Grade Per Mile					0.0167										
		Interoffice Transport - Dedicated - 2-wr Voice Grade Per Facility Termination					24.30	40.63	27.47	16.77	6.91		15.69				
		Local Channel - Dedicated - DS1 - Zone 1					42.62	177.87	154.06	22.24	15.30		15.69				
		Local Channel - Dedicated - DS1 - Zone 2					70.32	177.87	154.06	22.24	15.30		15.69				
		Local Channel - Dedicated - DS1 - Zone 3					190.68	177.87	154.06	22.24	15.30		15.69				
		Interoffice Transport - Dedicated - DS1 Per Mile					0.3415										
		Interoffice Transport - Dedicated - DS1 Per Facility Termination					77.14	89.47	81.99	16.39	14.48		15.69				
CALLING NAME (CNAM) SERVICE																	
		CNAM For DB Owners - Service Establishment			OQV			23.00	23.00	21.15	21.15		15.69				
		CNAM For Non DB Owners - Service Establishment			OQV			23.00	23.00	21.15	21.15		15.69				
		CNAM For DB Owners - Service Provisioning With Point Code Establishment			OQV			993.09	734.47	269.53	198.18		15.69				
		CNAM For Non DB Owners - Service Provisioning With Point Code Establishment			OQV			343.09	245.69	275.87	198.18		15.69				
		CNAM for DB Owners, Per Query			OQV		0.0010433										
		CNAM for Non DB Owners, Per Query			OQV		0.0010433										

UNBUNDLED NETWORK ELEMENTS - South Carolina														Attachment: 2		Exhibit: B	
CATEGORY		RATE ELEMENTS	Interim	Zone	BCS	USOC	RATES($)					Svc Order Submitted Elec per LSR	Svc Order Submitted Manually per LSR	Incremental Charge - Manual Svc Order vs. Electronic-1st	Incremental Charge - Manual Svc Order vs. Electronic-Add'l	Incremental Charge - Manual Svc Order vs. Electronic-Disc 1st	Incremental Charge - Manual Svc Order vs. Electronic-Disc Add'l
							Rec	Nonrecurring		Nonrecurring Disconnect		OSS Rates($)					
								First	Add'l	First	Add'l	SOMEC	SOMAN	SOMAN	SOMAN	SOMAN	SOMAN
LNP Query Service																	
		LNP Charge Per query					0.0008837										
		LNP Service Establishment Manual						25.09	25.09	23.07	23.07		15.69				
		LNP Service Provisioning with Point Code Establishment						594.82	303.88	269.53	198.18		15.69				
OPERATOR CALL PROCESSING																	
		Oper. Call Processing - Oper. Provided, Per Min. - Using BST LIDB					1.20										
		Oper. Call Processing - Oper. Provided, Per Min. - Using Foreign LIDB					1.24										
		Oper. Call Processing - Fully Automated, per Call - Using BST LIDB					0.20										
		Oper. Call Processing - Fully Automated, per Call - Using Foreign LIDB					0.20										
INWARD OPERATOR SERVICES																	
		Inward Operator Services - Verification, Per Minute					1.15										
		Inward Operator Services - Verification and Emergency Interrupt - Per Minute					1.15										
BRANDING - OPERATOR CALL PROCESSING																	
		Recording of Custom Branded OA Announcement				CBAOS		7,000.00	7,000.00				15.69				
		Loading of Custom Branded OA Announcement per shelf/NAV				CBAOL		500.00	500.00				15.69				
	Unbranding via OLNS for UNEP CLEC																
		Loading of OA per OCN (Regional)						1,200.00	1,200.00				15.69				
DIRECTORY ASSISTANCE SERVICES																	
	DIRECTORY ASSISTANCE ACCESS SERVICE																
		Directory Assistance Access Service Calls, Charge Per Call					0.275										
	DIRECTORY ASSISTANCE CALL COMPLETION ACCESS SERVICE (DACC)																
		Directory Assistance Call Completion Access Service (DACC), Per Call Attempt					0.10										
	DIRECTORY TRANSPORT																
DIRECTORY ASSISTANCE SERVICES																	
	DIRECTORY ASSISTANCE DATA BASE SERVICE (DADS)																
		Directory Assistance Data Base Service Charge Per Listing					0.04										
		Directory Assistance Data Base Service, per month				DBSOF	150.00										
BRANDING - DIRECTORY ASSISTANCE																	
	Facility Based CLEC																
		Recording and Provisioning of DA Custom Branded Announcement			AMT	CBADA		6,000.00	6,000.00								
		Loading of Custom Branded Announcement per DRAM Card/Switch			AMT	CBADC		1,170.00	1,170.00								
	UNEP CLEC																
		Recording of DA Custom Branded Announcement						3,000.00	3,000.00								
		Loading of DA Custom Branded Announcement per DRAM Card/Switch per OCN						1,170.00	1,170.00								
	Unbranding via OLNS for UNEP CLEC																
		Loading of DA per OCN (1 OCN per Order)						420.00	420.00								
		Loading of DA per Switch per OCN						16.00	16.00								
SELECTIVE ROUTING																	
		Selective Routing Per Unique Line Class Code Per Request Per Switch				USRCR		84.89	84.89	14.14	14.14		15.69				
VIRTUAL COLLOCATION																	
		Virtual Collocation - Application Cost			AMTFS	EAF		1,207.95	1,207.95	0.51	0.51						
		Virtual Collocation - Cable Installation Cost, per cable			AMTFS	ESPCX		794.22	794.22	22.54	22.54						
		Virtual Collocation - Floor Space, per sq. ft.			AMTFS	ESPVX	3.95										
		Virtual Collocation - Power, per breaker amp			AMTFS	ESPAX	9.19										
		Virtual Collocation - Cable Support Structure, per entrance cable			AMTFS	ESPSX	18.66										

CATEGORY		RATE ELEMENTS	Interim	Zone	BCS	USOC	RATES($)					Svc Order Submitted Elec per LSR	Svc Order Submitted Manually per LSR	Incremental Charge - Manual Svc Order vs. Electronic-1st	Incremental Charge - Manual Svc Order vs. Electronic-Add'l	Incremental Charge - Manual Svc Order vs. Electronic-Disc 1st	Incremental Charge - Manual Svc Order vs. Electronic-Disc Add'l
							Rec	Nonrecurring		Nonrecurring Disconnect		OSS Rates($)					
								First	Add'l	First	Add'l	SOMEC	SOMAN	SOMAN	SOMAN	SOMAN	SOMAN
		Virtual Collocation - 2-wire Cross Connects (loop)			UEANL,UEA,UDN,UDC,UAL,UHL,UCL,UEQ, AMTFS, UDL, UNCVX, UNCDX, UNCNX	UEAC2	0.0317	12.32	11.83	6.04	5.45		15.69				
		Virtual Collocation - 4-wire Cross Connects (loop)			UEA,UHL,UCL,UDL, AMTFS, UAL, UDN, UNCVX, UNCDX	UEAC4	0.0634	12.42	11.90	6.40	5.74		15.69				
		Virtual Collocation - 2-Fiber Cross Connects			AMTFS,UDL12, UDLO3, U1T48, U1T12, U1T03, ULDO3, ULD12, ULD48, UDF	CNC2F	2.86	20.94	15.23	7.40	5.93		15.69				
		Virtual Collocation - 4-Fiber Cross Connects			AMTFS,UDL12, UDLO3, U1T48, U1T12, U1T03, ULDO3, ULD12, ULD48, UDF	CNC4F	5.71	25.61	19.90	9.73	8.26		15.69				
		Virtual collocation - DS1 Cross Connects			USL,ULC,AMTFS, ULR, UXTD1, UNC1X, ULDD1, U1TD1, USLEL, UNLD1	CNC1X	1.12	22.08	15.96	6.42	5.80		15.69				
		Virtual collocation - DS3 Cross Connects			USL,ULC,AMTFS,UE3, U1TD3, UXTS1, UXTD3, UNC3X, UNCSX, ULDD3, U1TS1, ULDS1, UDLSX, UNLD3	CND3X	14.21	20.94	15.23	7.39	5.93		15.69				
		Virtual Collocation - Co-Carrier Cross Connects - Fiber Cable Support Structure, per linear foot			AMTFS	VE1CB	0.0022										
		Virtual Collocation - Co-Carrier Cross Connects - Copper/Coax Cable Support Structure, per linear ft			AMTFS	VE1CD	0.0033										
		Virtual Collocation - Co-Carrier Cross Connects - Fiber Cable Support Structure,per cable			AMTFS	VE1CC		536.56									
		Virtual Collocation - Co-Carrier Cross Connects - Copper/Coax Cable Support Structure, per cable			AMTFS	VE1CE		536.56									
		Virtual collocation - Security Escort - Basic, per half hour			AMTFS	SPTBX		16.96	10.75								
		Virtual collocation - Security Escort - Overtime, per half hour			AMTFS	SPTOX		22.10	13.89								
		Virtual collocation - Security Escort - Premium, per half hour			AMTFS	SPTPX		27.23	17.02								
		Virtual collocation - Maintenance in CO - Basic, per half hour			AMTFS	CTRLX		27.99	10.75								
		Virtual collocation - Maintenance in CO - Overtime, per half hour			AMTFS	SPTOM		36.56	13.89								
		Virtual collocation - Maintenance in CO - Premium per half hour			AMTFS	SPTPM		45.12	17.02								
VIRTUAL COLLOCATION																	
		Virtual Collocation - 2-wire Cross Connect, Exchange Port 2-Wire Analog - Res			UEPSR	VE1R2	0.0317	12.32	11.83	6.04	5.45		15.69				
		Virtual Collocation 2-Wire Cross Connect, Exchange Port 2-Wire Line Side PBX Trunk - Bus			UEPSP	VE1R2	0.0317	12.32	11.83	6.04	5.45		15.69				
		Virtual Collocation 2-Wire Cross Connect, Exchange Port 2-Wire Voice Grade PBX Trunk - Res			UEPSE	VE1R2	0.0317	12.32	11.83	6.04	5.45		15.69				
		Virtual Collocation 2-Wire Cross Connect, Exchange Port 2-Wire Analog Bus			UEPSB	VE1R2	0.0317	12.32	11.83	6.04	5.45		15.69				
		Virtual Collocation 2-Wire Cross Connect, Exchnage Port 2-Wire ISDN			UEPSX	VE1R2	0.0317	12.32	11.83	6.04	5.45		15.69				
		Virtual Collocation 2-Wire Cross Connect, Exchange Port 2-Wire ISDN			UEPTX	VE1R2	0.0317	12.32	11.83	6.04	5.45		15.69				

UNBUNDLED NETWORK ELEMENTS - South Carolina													Attachment: 2		Exhibit: B	
CATEGORY	RATE ELEMENTS	Interim	Zone	BCS	USOC	RATES($)					Svc Order Submitted Elec per LSR	Svc Order Submitted Manually per LSR	Incremental Charge - Manual Svc Order vs. Electronic-1st	Incremental Charge - Manual Svc Order vs. Electronic-Add'l	Incremental Charge - Manual Svc Order vs. Electronic-Disc 1st	Incremental Charge - Manual Svc Order vs. Electronic-Disc Add'l
						Rec	Nonrecurring		Nonrecurring Disconnect		OSS Rates($)					
							First	Add'l	First	Add'l	SOMEC	SOMAN	SOMAN	SOMAN	SOMAN	SOMAN
	Virtual Collocation 4-Wire Cross Connect, Exchange Port 4-Wire ISDN DS1			UEPEX	VE1R4	1.12	22.08	15.96	6.42	5.80		15.69				
VIRTUAL COLLOCATION																
	Virtual Collocation-2 Wire Cross Connects (Loop) for Line Splitting			UEPSR, UEPSB	VE1LS	0.0317	12.32	11.83	6.04	5.45		15.69				
AIN SELECTIVE CARRIER ROUTING																
	Regional Service Establishment			SRC	SRCEC		101,324.34	101,324.34	8,609.85	8,609.85		15.69				
	End Office Establishment			SRC	SRCEO		175.66	175.66	1.70	1.70		15.69				
	Query NRC, per query			SRC		0.0035036										
AIN - BELLSOUTH AIN SMS ACCESS SERVICE																
	AIN SMS Access Service - Service Establishment, Per State, Initial Setup			A1N	CAMSE		39.53	39.53	40.78	40.78		15.69				
	AIN SMS Access Service - Port Connection - Dial/Shared Access			A1N	CAMDP		7.85	7.85	9.11	9.11		15.69				
	AIN SMS Access Service - Port Connection - ISDN Access			A1N	CAM1P		7.85	7.85	9.11	9.11		15.69				
	AIN SMS Access Service - User Identification Codes - Per User ID Code			A1N	CAMAU		35.08	35.08	27.12	27.12		15.69				
	AIN SMS Access Service - Security Card, Per User ID Code, Initial or Replacement			A1N	CAMRC		41.98	41.98	11.74	11.74		15.69				
	AIN SMS Access Service - Storage, Per Unit (100 Kilobytes)					0.0027										
	AIN SMS Access Service - Session, Per Minute					0.7121										
	AIN SMS Access Service - Company Performed Session, Per Minute					0.8364										
AIN - BELLSOUTH AIN TOOLKIT SERVICE																
	AIN Toolkit Service - Service Establishment Charge, Per State, Initial Setup			CAM	BAPSC		39.53	39.53	40.78	40.78		15.69				
	AIN Toolkit Service - Training Session, Per Customer				BAPVX		4,211.54	4,211.54	0.00	0.00		15.69				
	AIN Toolkit Service - Trigger Access Charge, Per Trigger, Per DN, Term. Attempt				BAPTT		7.85	7.85	9.11	9.11		15.69				
	AIN Toolkit Service - Trigger Access Charge, Per Trigger, Per DN, Off-Hook Delay				BAPTD		7.85	7.85	9.11	9.11		15.69				
	AIN Toolkit Service - Trigger Access Charge, Per Trigger, Per DN, Off-Hook Immediate				BAPTM		7.85	7.85	9.11	9.11		15.69				
	AIN Toolkit Service - Trigger Access Charge, Per Trigger, Per DN, 10-Digit PODP				BAPTO		34.54	34.54	14.39	14.39		15.69				
	AIN Toolkit Service - Trigger Access Charge, Per Trigger, Per DN, CDP				BAPTC		34.54	34.54	14.39	14.39		15.69				
	AIN Toolkit Service - Trigger Access Charge, Per Trigger, Per DN, Feature Code				BAPTF		34.54	34.54	14.39	14.39		15.69				
	AIN Toolkit Service - Query Charge, Per Query					0.0558238										
	AIN Toolkit Service - Type 1 Node Charge, Per AIN Toolkit Subscription, Per Node, Per Query					0.0069214										
	AIN Toolkit Service - SCP Storage Charge, Per SMS Access Account, Per 100 Kilobytes					0.07										
	AIN Toolkit Service - Monthly report - Per AIN Toolkit Service Subscription			CAM	BAPMS	11.87	7.85	7.85	5.52	5.52		15.69				
	AIN Toolkit Service - Special Study - Per AIN Toolkit Service Subscription			CAM	BAPLS	3.51	8.68	8.68				15.69				
	AIN Toolkit Service - Call Event Report - Per AIN Toolkit Service Subscription			CAM	BAPDS	8.48	7.85	7.85	5.52	5.52		15.69				
	AIN Toolkit Service - Call Event Special Study - Per AIN Toolkit Service Subscription			CAM	BAPES	0.12	8.68	8.68				15.69				
ENHANCED EXTENDED LINK (EELs)																
	NOTE: New EELs available in GA, TN, KY, LA, MS, & SC and density zone 1 of following MSAs: Orlando, FL; Miami, FL; Ft. Lauderdale, FL;															
	NOTE: Charlotte-Gastonia-Rockhill, NC; Greensboro-Winston Salem-High Point, NC. Use all rates below except Switch As Is Charge.															
	NOTE: In all states, EEL network elements shown below also apply to currently combined facilities which are converted to UNE rates. A Switch As Is Charge applies to currently combined facilities converted to UNEs.(Non-recurring rates do not apply.)															
	NOTE: In GA, TN, KY, LA, MS & SC the EEL network elements apply to ordinarily combined network elements.(No Switch As Is Charge.)															
	2-WIRE VOICE GRADE EXTENDED LOOP WITH DEDICATED DS1 INTEROFFICE TRANSPORT (EEL)															

UNBUNDLED NETWORK ELEMENTS - South Carolina														Attachment: 2		Exhibit: B	
CATEGORY		RATE ELEMENTS	Interim	Zone	BCS	USOC	RATES($)					Svc Order Submitted Elec per LSR	Svc Order Submitted Manually per LSR	Incremental Charge - Manual Svc Order vs. Electronic-1st	Incremental Charge - Manual Svc Order vs. Electronic-Add'l	Incremental Charge - Manual Svc Order vs. Electronic-Disc 1st	Incremental Charge - Manual Svc Order vs. Electronic-Disc Add'l
							Rec	Nonrecurring		Nonrecurring Disconnect		OSS Rates($)					
								First	Add'l	First	Add'l	SOMEC	SOMAN	SOMAN	SOMAN	SOMAN	SOMAN
		First 2-Wire VG Loop(SL2) in a DS1 Interofficed Transport Combination - Zone 1		1	UNCVX	UEAL2	16.68	105.98	68.43	53.05	10.61		15.69				
		First 2-Wire VG Grade Loop(SL2) in a DS1 Interofficed Transport Combination - Zone 2		2	UNCVX	UEAL2	23.13	105.98	68.43	53.05	10.61		15.69				
		First 2-Wire VG Grade Loop(SL2) in a DS1 Interofficed Transport Combination - Zone 3		3	UNCVX	UEAL2	28.46	105.98	68.43	53.05	10.61		15.69				
		Interoffice Transport - Dedicated - DS1 combination - Per Mile per month			UNC1X	1L5XX	0.27										
		Interoffice Transport - Dedicated - DS1 combination - Facility Termination per month			UNC1X	U1TF1	61.71	89.47	81.99	16.39	14.48		15.69				
		DS1 Channelization System Per Month			UNC1X	MQ1	107.57	91.24	62.71	10.56	9.81		15.69				
		Voice Grade COCI - DS1 To Ds0 Interface - Per Month			UNCVX	1D1VG	0.56	6.59	4.73				15.69				
		Each Additional 2-Wire VG Loop(SL 2) in the same DS1 Interoffice Transport Combination - Zone 1		1	UNCVX	UEAL2	16.68	105.98	68.43	53.05	10.61		15.69				
		Each Additional 2-Wire VG Loop(SL2) in the same DS1 Interoffice Transport Combination - Zone 2		2	UNCVX	UEAL2	23.13	105.98	68.43	53.05	10.61		15.69				
		Each Additional 2-Wire VG Loop(SL2) in the same DS1 Interoffice Transport Combination - Zone 3		3	UNCVX	UEAL2	28.46	105.98	68.43	53.05	10.61		15.69				
		Voice Grade COCI - DS1 to DS0 Channel System combination - per month			UNCVX	1D1VG	0.56	6.59	4.73				15.69				
		Nonrecurring Currently Combined Network Elements Switch -As-Is Charge			UNC1X	UNCCC		5.61	5.61	7.00	7.00		15.69				
	4-WIRE VOICE GRADE EXTENDED LOOP WITH DEDICATED DS1 INTEROFFICE TRANSPORT (EEL)																
		First 4-Wire Analog Voice Grade Loop in a DS1 Interoffice Transport Combination - Zone 1		1	UNCVX	UEAL4	32.59	132.38	94.83	59.35	14.61		15.69				
		First 4-Wire Analog Voice Grade Loop in a DS1 Interoffice Transport Combination - Zone 2		2	UNCVX	UEAL4	43.89	132.38	94.83	59.35	14.61		15.69				
		First 4-Wire Analog Voice Grade Loop in a DS1 Interoffice Transport Combination - Zone 3		3	UNCVX	UEAL4	43.38	132.38	94.83	59.35	14.61		15.69				
		Interoffice Transport - Dedicated - DS1 combination - Per Mile Per Month			UNC1X	1L5XX	0.27										
		Interoffice Transport - Dedicated - DS1 - Facility Termination Per Month			UNC1X	U1TF1	61.71	89.47	81.99	16.39	14.48		15.69				
		Channelization - Channel System DS1 to DS0 combination Per Month			UNC1X	MQ1	107.57	91.24	62.71	10.56	9.81		15.69				
		Voice Grade COCI - DS1 to DS0 Channel System combination - per month			UNCVX	1D1VG	0.56	6.59	4.73				15.69				
		Additional 4-Wire Analog Voice Grade Loop in same DS1 Interoffice Transport Combination - Zone 1		1	UNCVX	UEAL4	32.59	132.38	94.83	59.35	14.61		15.69				
		Additional 4-Wire Analog Voice Grade Loop in same DS1 Interoffice Transport Combination - Zone 2		2	UNCVX	UEAL4	43.89	132.38	94.83	59.35	14.61		15.69				
		Additional 4-Wire Analog Voice Grade Loop in same DS1 Interoffice Transport Combination - Zone 3		3	UNCVX	UEAL4	43.38	132.38	94.83	59.35	14.61		15.69				
		Nonrecurring Currently Combined Network Elements Switch -As-Is Charge			UNC1X	UNCCC		5.61	5.61	7.00	7.00		15.69				
	4-WIRE 56 KBPS EXTENDED DIGITAL LOOP WITH DEDICATED DS1 INTEROFFICE TRANSPORT (EEL)																
		First 4-Wire 56Kbps Digital Grade Loop in a DS1 Interoffice Transport Combination - Zone 1		1	UNCDX	UDL56	29.93	126.66	89.12	59.35	14.61		15.69				
		First 4-wire 56Kbps Digital Grade Loop in a DS1 Interoffice Transport Combination - Zone 2		2	UNCDX	UDL56	33.99	126.66	89.12	59.35	14.61		15.69				
		First 4-Wire 56Kbps Digital Grade Loop in a DS1 Interoffice Transport Combination - Zone 3		3	UNCDX	UDL56	34.74	126.66	89.12	59.35	14.61		15.69				
		Interoffice Transport - Dedicated - DS1 combination - Per Mile Per Month			UNC1X	1L5XX	0.27										
		Interoffice Transport - Dedicated - DS1 - combination Facility Termination Per Month			UNC1X	U1TF1	61.71	89.47	81.99	16.39	14.48		15.69				
		Channelization - Channel System DS1 to DS0 combination Per Month			UNC1X	MQ1	107.57	91.24	62.71	10.56	9.81		15.69				

UNBUNDLED NETWORK ELEMENTS - South Carolina														Attachment: 2		Exhibit: B	
CATEGORY		RATE ELEMENTS	Interim	Zone	BCS	USOC	RATES($)					Svc Order Submitted Elec per LSR	Svc Order Submitted Manually per LSR	Incremental Charge - Manual Svc Order vs. Electronic-1st	Incremental Charge - Manual Svc Order vs. Electronic-Add'l	Incremental Charge - Manual Svc Order vs. Electronic-Disc 1st	Incremental Charge - Manual Svc Order vs. Electronic-Disc Add'l
							Rec	Nonrecurring		Nonrecurring Disconnect		OSS Rates($)					
								First	Add'l	First	Add'l	SOMEC	SOMAN	SOMAN	SOMAN	SOMAN	SOMAN
		OCU-DP COCI (data) - DS1 to DS0 Channel System - per month (2.4-64kbs)			UNCDX	1D1DD	1.19	6.59	4.73				15.69				
		Additional 4-Wire 56Kbps Digital Grade Loopin same DS1 Interoffice Transport Combination - Zone 1		1	UNCDX	UDL56	29.93	126.66	89.12	59.35	14.61		15.69				
		Additional 4-Wire 56Kbps Digital Grade Loopin same DS1 Interoffice Transport Combination - Zone 2		2	UNCDX	UDL56	33.99	126.66	89.12	59.35	14.61		15.69				
		Additional 4-Wire 56Kbps Digital Grade Loopin same DS1 Interoffice Transport Combination - Zone 3		3	UNCDX	UDL56	34.74	126.66	89.12	59.35	14.61		15.69				
		OCU-DP COCI (data) - DS1 to DS0 Channel System - combination per month (2.4-64kbs)			UNCDX	1D1DD	1.19	6.59	4.73				15.69				
		Nonrecurring Currently Combined Network Elements Switch -As-Is Charge			UNC1X	UNCCC		5.61	5.61	7.00	7.00		15.69				
	4-WIRE 64 KBPS EXTENDED DIGITAL LOOP WITH DEDICATED DS1 INTEROFFICE TRANSPORT (EEL)																
		First 4-Wire 64Kbps Digital Grade Loop in a DS1 Interoffice Transport Combination - Zone 1		1	UNCDX	UDL64	29.93	126.66	89.12	59.35	14.61		15.69				
		First 4-Wire 64Kbps Digital Grade Loop in a DS1 Interoffice Transport Combination - Zone 2		2	UNCDX	UDL64	33.99	126.66	89.12	59.35	14.61		15.69				
		First 4-Wire 64Kbps Digital Grade Loop in a DS1 Interoffice Transport Combination - Zone 3		3	UNCDX	UDL64	34.74	126.66	89.12	59.35	14.61		15.69				
		Interoffice Transport - Dedicated - DS1 combination - Per Mile Per Month			UNC1X	1L5XX	0.27										
		Interoffice Transport - Dedicated - DS1 combination - Facility Termination Per Month			UNC1X	U1TF1	61.71	89.47	81.99	16.39	14.48		15.69				
		Channelization - Channel System DS1 to DS0 combination Per Month			UNC1X	MQ1	107.57	91.24	62.71	10.56	9.81		15.69				
		OCU-DP COCI (data) - DS1 to DS0 Channel System combination - per month (2.4-64kbs)			UNCDX	1D1DD	1.19	6.59	4.73				15.69				
		Additional 4-Wire 64Kbps Digital Grade Loopin same DS1 Interoffice Transport Combination - Zone 1		1	UNCDX	UDL64	29.93	126.66	89.12	59.35	14.61		15.69				
		Additional 4-Wire 64Kbps Digital Grade Loopin same DS1 Interoffice Transport Combination - Zone 2		2	UNCDX	UDL64	33.99	126.66	89.12	59.35	14.61		15.69				
		Additional 4-Wire 64Kbps Digital Grade Loopin same DS1 Interoffice Transport Combination - Zone 3		3	UNCDX	UDL64	34.74	126.66	89.12	59.35	14.61		15.69				
		OCU-DP COCI (data) - DS1 to DS0 Channel System combination - per month (2.4-64kbs)			UNCDX	1D1DD	1.19	6.59	4.73				15.69				
		Nonrecurring Currently Combined Network Elements Switch -As-Is Charge			UNC1X	UNCCC		5.61	5.61	7.00	7.00		15.69				
	4-WIRE DS1 DIGITAL EXTENDED LOOP WITH DEDICATED DS1 INTEROFFICE TRANSPORT (EEL)																
		4-Wire DS1 Digital Loop in Combination with DS1 Interoffice Transport - Zone 1		1	UNC1X	USLXX	90.87	253.03	157.89	44.80	11.73		15.69				
		4-Wire DS1 Digital Loop in Combination with DS1 Interoffice Transport - Zone 2		2	UNC1X	USLXX	155.43	253.03	157.89	44.80	11.73		15.69				
		4-Wire DS1 Digital Loop in Combination with DS1 Interoffice Transport - Zone 3		3	UNC1X	USLXX	261.89	253.03	157.89	44.80	11.73		15.69				
		Interoffice Transport - Dedicated - DS1 combination - Per Mile Per Month			UNC1X	1L5XX	0.27										
		Interoffice Transport - Dedicated - DS1 combination - Facility Termination Per Month			UNC1X	U1TF1	61.71	89.47	81.99	16.39	14.48		15.69				
		Nonrecurring Currently Combined Network Elements Switch -As-Is Charge			UNC1X	UNCCC		5.61	5.61	7.00	7.00		15.69				
	4-WIRE DS1 DIGITAL EXTENDED LOOP WITH DEDICATED DS3 INTEROFFICE TRANSPORT (EEL)																
		First DS1Loop in DS3 Interoffice Transport Combination - Zone 1		1	UNC1X	USLXX	90.87	253.03	157.89	44.80	11.73		15.69				
		First DS1Loop in DS3 Interoffice Transport Combination - Zone 2		2	UNC1X	USLXX	155.43	253.03	157.89	44.80	11.73		15.69				
		First DS1Loop in DS3 Interoffice Transport Combination - Zone 3		3	UNC1X	USLXX	261.89	253.03	157.89	44.80	11.73		15.69				
		Interoffice Transport - Dedicated - DS3 combination - Per Mile Per Month			UNC3X	1L5XX	6.42										

CATEGORY		RATE ELEMENTS	Interim	Zone	BCS	USOC	RATES($)					Svc Order Submitted Elec per LSR	Svc Order Submitted Manually per LSR	Incremental Charge - Manual Svc Order vs. Electronic-1st	Incremental Charge - Manual Svc Order vs. Electronic-Add'l	Incremental Charge - Manual Svc Order vs. Electronic-Disc 1st	Incremental Charge - Manual Svc Order vs. Electronic-Disc Add'l
							Rec	Nonrecurring		Nonrecurring Disconnect		OSS Rates($)					
								First	Add'l	First	Add'l	SOMEC	SOMAN	SOMAN	SOMAN	SOMAN	SOMAN
		Interoffice Transport - Dedicated - DS3 - Facility Termination per month			UNC3X	U1TF3	704.52	279.37	163.12	60.33	58.59		15.69				
		DS3 to DS1 Channel System combination per month			UNC3X	MQ3	144.02	178.54	94.18	33.33	31.90		15.69				
		DS3 Interface Unit (DS1 COCI) combination per month			UNC1X	UC1D1	8.64	6.59	4.73				15.69				
		Additional DS1Loop in DS3 Interoffice Transport Combination - Zone 1		1	UNC1X	USLXX	90.87	253.03	157.89	44.80	11.73		15.69				
		Additional DS1Loop in DS3 Interoffice Transport Combination - Zone 2		2	UNC1X	USLXX	155.43	253.03	157.89	44.80	11.73		15.69				
		Additional DS1Loop in DS3 Interoffice Transport Combination - Zone 3		3	UNC1X	USLXX	261.89	253.03	157.89	44.80	11.73		15.69				
		DS3 Interface Unit (DS1 COCI) combination per month			UNC1X	UC1D1	8.64	6.59	4.73				15.69				
		Nonrecurring Currently Combined Network Elements Switch -As-Is Charge			UNC3X	UNCCC		5.61	5.61	7.00	7.00		15.69				
	2-WIRE VOICE GRADE EXTENDED LOOP/ 2 WIRE VOICE GRADE INTEROFFICE TRANSPORT (EEL)																
		2-WireVG Loop used with 2-wire VG Interoffice Transport Combination - Zone 1		1	UNCVX	UEAL2	16.68	105.98	68.43	53.05	10.61		15.69				
		2-WireVG Loop used with 2-wire VG Interoffice Transport Combination - Zone 2		2	UNCVX	UEAL2	23.13	105.98	68.43	53.05	10.61		15.69				
		2-WireVG Loop used with 2-wire VG Interoffice Transport Combination - Zone 3		3	UNCVX	UEAL2	28.46	105.98	68.43	53.05	10.61		15.69				
		Interoffice Transport - Dedicated - 2-wire VG combination - Per Mile Per Month			UNCVX	1L5XX	0.0134										
		Interoffice Transport - Dedicated - 2- Wire Voice Grade combination - Facility Termination per month			UNCVX	U1TV2	19.44	40.63	27.47	16.77	6.91		15.69				
		Nonrecurring Currently Combined Network Elements Switch -As-Is Charge			UNCVX	UNCCC		5.61	5.61	7.00	7.00		15.69				
	4-WIRE VOICE GRADE EXTENDED LOOP/ 4 WIRE VOICE GRADE INTEROFFICE TRANSPORT (EEL)																
		4-WireVG Loop used with 4-wire VG Interoffice Transport Combination - Zone 1		1	UNCVX	UEAL4	32.59	132.38	94.83	59.35	14.61		15.69				
		4-WireVG Loop used with 4-wire VG Interoffice Transport Combination - Zone 2		2	UNCVX	UEAL4	43.89	132.38	94.83	59.35	14.61		15.69				
		4-WireVG Loop used with 4-wire VG Interoffice Transport Combination - Zone 3		3	UNCVX	UEAL4	43.38	132.38	94.83	59.35	14.61		15.69				
		Interoffice Transport - Dedicated - 4-wire VG combination - Per Mile Per Month			UNCVX	1L5XX	0.0134										
		Interoffice Transport - Dedicated - 4- Wire Voice Grade combination - Facility Termination per month			UNCVX	U1TV4	17.03	40.63	27.47	16.77	6.91		15.69				
		Nonrecurring Currently Combined Network Elements Switch -As-Is Charge			UNCVX	UNCCC		5.61	5.61	7.00	7.00		15.69				
	DS3 DIGITAL EXTENDED LOOP WITH DEDICATED DS3 INTEROFFICE TRANSPORT (EEL)																
		High Capacity Unbundled Local Loop - DS3 combination - Per Mile per month			UNC3X	1L5ND	12.26										
		High Capacity Unbundled Local Loop - DS3 combination - Facility Termination per month			UNC3X	UE3PX	306.36	452.52	264.53	119.75	83.77		15.69				
		Interoffice Transport - Dedicated - DS3 - Per Mile per month			UNC3X	1L5XX	6.42										
		Interoffice Transport - Dedicated - DS3 combination - Facility Termination per per month			UNC3X	U1TF3	704.52	279.37	163.12	60.33	58.59		15.69				
		Nonrecurring Currently Combined Network Elements Switch -As-Is Charge			UNC3X	UNCCC		5.61	5.61	7.00	7.00		15.69				
	STS1 DIGITAL EXTENDED LOOP WITH DEDICATED STS1 INTEROFFICE TRANSPORT (EEL)																
		High Capacity Unbundled Local Loop - STS1 combination - Per Mile per month			UNCSX	1L5ND	12.26										
		High Capacity Unbundled Local Loop - STS1 combination - Facility Termination per month			UNCSX	UDLS1	313.49	452.52	264.53	119.75	83.77		15.69				
		Interoffice Transport - Dedicated - STS1 combination - Per Mile per month			UNCSX	1L5XX	6.42										
		Interoffice Transport - Dedicated - STS1 combination - Facility Termination per month			UNCSX	U1TFS	704.44	279.37	163.12	60.33	58.59		15.69				

UNBUNDLED NETWORK ELEMENTS - South Carolina														Attachment: 2		Exhibit: B	
CATEGORY		RATE ELEMENTS	Interim	Zone	BCS	USOC	RATES($)					Svc Order Submitted Elec per LSR	Svc Order Submitted Manually per LSR	Incremental Charge - Manual Svc Order vs. Electronic-1st	Incremental Charge - Manual Svc Order vs. Electronic-Add'l	Incremental Charge - Manual Svc Order vs. Electronic-Disc 1st	Incremental Charge - Manual Svc Order vs. Electronic-Disc Add'l
							Rec	Nonrecurring		Nonrecurring Disconnect		OSS Rates($)					
								First	Add'l	First	Add'l	SOMEC	SOMAN	SOMAN	SOMAN	SOMAN	SOMAN
		Nonrecurring Currently Combined Network Elements Switch -As-Is Charge			UNCSX	UNCCC		5.61	5.61	7.00	7.00		15.69				
	2-WIRE ISDN EXTENDED LOOP WITH DS1 INTEROFFICE TRANSPORT (EEL)																
		First 2-Wire ISDN Loop in a DS1 Interoffice Combination Transport - Zone 1		1	UNCNX	U1L2X	25.21	117.58	80.03	53.05	10.61		15.69				
		First 2-Wire ISDN Loop in a DS1 Interoffice Combination Transport - Zone 2		2	UNCNX	U1L2X	32.76	117.58	80.03	53.05	10.61		15.69				
		First 2-Wire ISDN Loop in a DS1 Interoffice Combination Transport - Zone 3		3	UNCNX	U1L2X	37.70	117.58	80.03	53.05	10.61		15.69				
		Interoffice Transport - Dedicated - DS1 combination - Per Mile			UNC1X	1L5XX	0.27										
		Interoffice Transport - Dedicated - DS1 combintion - Facility Termination per month			UNC1X	U1TF1	61.71	89.47	81.99	16.39	14.48		15.69				
		Channelization - Channel System DS1 to DS0 combination - per month			UNC1X	MQ1	107.57	91.24	62.71	10.56	9.81		15.69				
		2-wire ISDN COCI (BRITE) - DS1 to DS0 Channel System combination - per month			UNCNX	UC1CA	2.56	6.59	4.73				15.69				
		Additional 2-wire ISDN Loop in same DS1Interoffice Transport Combination - Zone 1		1	UNCNX	U1L2X	25.21	117.58	80.03	53.05	10.61		15.69				
		Additional 2-wire ISDN Loop in same DS1Interoffice Transport Combination - Zone 2		2	UNCNX	U1L2X	32.76	117.58	80.03	53.05	10.61		15.69				
		Additional 2-wire ISDN Loop in same DS1Interoffice Transport Combination - Zone 3		3	UNCNX	U1L2X	37.70	117.58	80.03	53.05	10.61		15.69				
		2-wire ISDN COCI (BRITE) - DS1 to DS0 Channel System combintaion- per month			UNCNX	UC1CA	2.56	6.59	4.73				15.69				
		Nonrecurring Currently Combined Network Elements Switch -As-Is Charge			UNC1X	UNCCC		5.61	5.61	7.00	7.00		15.69				
	4-WIRE DS1 DIGITAL EXTENDED LOOP WITH DEDICATED STS-1 INTEROFFICE TRANSPORT (EEL)																
		First DS1 Loop in STS1 Interoffice Transport Combination - Zone 1		1	UNC1X	USLXX	90.87	253.03	157.89	44.80	11.73		15.69				
		First DS1 Loop in STS1 Interoffice Transport Combination - Zone 2		2	UNC1X	USLXX	155.43	253.03	157.89	44.80	11.73		15.69				
		First DS1 Loop in STS1 Interoffice Transport Combination - Zone 3		3	UNC1X	USLXX	261.89	253.03	157.89	44.80	11.73		15.69				
		Interoffice Transport - Dedicated - STS1 combination - Per Mile Per Month			UNCSX	1L5XX	6.42										
		Interoffice Transport - Dedicated - STS1 combination - Facility Termination			UNCSX	U1TFS	704.44	279.37	163.12	60.33	58.59		15.69				
		STS1 to DS1 Channel System conbination per month			UNCSX	MQ3	144.02	178.54	94.18	33.33	31.90		15.69				
		DS3 Interface Unit (DS1 COCI) combination per month			UNC1X	UC1D1	8.64	6.59	4.73				15.69				
		Additional DS1Loop in STS1 Interoffice Transport Combination - Zone 1		1	UNC1X	USLXX	90.87	253.03	157.89	44.80	11.73		15.69				
		Additional DS1Loop in STS1 Interoffice Transport Combination - Zone 2		2	UNC1X	USLXX	155.43	253.03	157.89	44.80	11.73		15.69				
		Additional DS1Loop in STS1 Interoffice Transport Combination - Zone 3		3	UNC1X	USLXX	261.89	253.03	157.89	44.80	11.73		15.69				
		DS3 Interface Unit (DS1 COCI) combination per month			UNC1X	UC1D1	8.64	6.59	4.73				15.69				
		Nonrecurring Currently Combined Network Elements Switch -As-Is Charge			UNCSX	UNCCC		5.61	5.61	7.00	7.00		15.69				
	4-WIRE 56 KBPS DIGITAL EXTENDED LOOP WITH 56 KBPS INTEROFFICE TRANSPORT (EEL)																
		4-wire 56 kbps Loop/4-wire 56 kbps Interoffice Transport Combination - Zone 1		1	UNCDX	UDL56	29.93	126.66	89.12	59.35	14.61		15.69				
		4-wire 56 kbps Loop/4-wire 56 kbps Interoffice Transport Combination - Zone 2		2	UNCDX	UDL56	33.99	126.66	89.12	59.35	14.61		15.69				
		4-wire 56 kbps Loop/4-wire 56 kbps Interoffice Transport Combination - Zone 3		3	UNCDX	UDL56	34.74	126.66	89.12	59.35	14.61		15.69				
		Interoffice Transport - Dedicated - 4-wire 56 kbps combination - Per Mile			UNCDX	1L5XX	0.0134										
		Interoffice Transport - Dedicated - 4-wire 56 kbps combination - Facility Termination			UNCDX	U1TD5	13.41	40.63	27.47	16.77	6.91		15.69				

CATEGORY	RATE ELEMENTS	Interim	Zone	BCS	USOC	RATES($) Rec	Nonrecurring First	Nonrecurring Add'l	Nonrecurring Disconnect First	Nonrecurring Disconnect Add'l	Svc Order Submitted Elec per LSR	Svc Order Submitted Manually per LSR	OSS Rates($) Incremental Charge - Manual Svc Order vs. Electronic- 1st	OSS Rates($) Incremental Charge - Manual Svc Order vs. Electronic- Add'l	OSS Rates($) Incremental Charge - Manual Svc Order vs. Electronic- Disc 1st	OSS Rates($) Incremental Charge - Manual Svc Order vs. Electronic- Disc Add'l
											SOMEC	SOMAN	SOMAN	SOMAN	SOMAN	SOMAN
	Nonrecurring Currently Combined Network Elements Switch -As-Is Charge			UNCDX	UNCCC		5.61	5.61	7.00	7.00		15.69				
4-WIRE 64 KBPS DIGITAL EXTENDED LOOP WITH 64 KBPS INTEROFFICE TRANSPORT (EEL)																
	4-wire 64 kbps Loop/4-wire 64 kbps Interoffice Transport Combination - Zone 1		1	UNCDX	UDL64	29.93	126.66	89.12	59.35	14.61		15.69				
	4-wire 64 kbps Loop/4-wire 64 kbps Interoffice Transport Combination - Zone 2		2	UNCDX	UDL64	33.99	126.66	89.12	59.35	14.61		15.69				
	4-wire 64 kbps Loop/4-wire 64 kbps Interoffice Transport Combination - Zone 3		3	UNCDX	UDL64	34.74	126.66	89.12	59.35	14.61		15.69				
	Interoffice Transport - Dedicated - 4-wire 64 kbps combination - Per Mile			UNCDX	1L5XX	0.0134										
	Interoffice Transport - Dedicated - 4-wire 64 kbps combination - Facility Termination			UNCDX	U1TD6	13.41	40.63	27.47	16.77	6.91		15.69				
	Nonrecurring Currently Combined Network Elements Switch -As-Is Charge			UNCDX	UNCCC		5.61	5.61	7.00	7.00		15.69				
ADDITIONAL NETWORK ELEMENTS																
When used as a part of a currently combined facility, the non-recurrng charges do not apply, but a Switch As Is charge does apply.																
When used as ordinarilty combined network elements in South Carolina, the non-recurring charges apply and the Switch As Is Charge does not.																
Node (SynchroNet)																
Nonrecurring Currently Combined Network Elements "Switch As Is" Charge (One applies to each combination)																
	Nonrecurring Currently Combined Network Elements Switch -As-Is Charge - 2 wire/4-Wire VG			UNCVX	UNCCC		5.61	5.61	7.00	7.00		15.69				
	Nonrecurring Currently Combined Network Elements Switch -As-Is Charge - 56/64 kbps			UNCDX	UNCCC		5.61	5.61	7.00	7.00		15.69				
	Nonrecurring Currently Combined Network Elements Switch -As-Is Charge - DS1			UNC1X	UNCCC		5.61	5.61	7.00	7.00		15.69				
	Nonrecurring Currently Combined Network Elements Switch -As-Is Charge - DS3			UNC3X	UNCCC		5.61	5.61	7.00	7.00		15.69				
	Nonrecurring Currently Combined Network Elements Switch -As-Is Charge - STS1			UNCSX	UNCCC		5.61	5.61	7.00	7.00		15.69				
NOTE: Local Channel - Dedicated Transport - minimum billing period - Below DS3=one month, DS3 and above=four months																
	Local Channel - Dedicated - 2-Wire Voice Grade per month			UNCXV	ULDV2	15.33	193.53	33.24	36.72	3.21		15.69				
	Local Channel - Dedicated - 4-Wire Voice Grade per month			UNCXV	ULDV4	16.54	193.97	33.68	37.19	3.68		15.69				
	Local Channel - Dedicated - DS1 per month Zone 1		1	UNC1X	ULDF1	42.62	177.87	154.06	22.24	15.30		15.69				
	Local Channel - Dedicated -DS1 Per Month Zone 2		2	UNC1X	ULDF1	70.32	177.87	154.06	22.24	15.30		15.69				
	Local Channel - Dedicated - DS1- Per Month Zone 3		3	UNC1X	ULDF1	190.68	177.87	154.06	22.24	15.30		15.69				
	Local Channel - Dedicated - DS3 - Per Mile per month			UNC3X	1L5NC	11.93										
	Local Channel - Dedicated - DS3 - Facility Termination per month			UNC3X	ULDF3	446.00	452.52	264.53	119.75	83.77		15.69				
	Local Channel - Dedicated - STS-1- Per Mile per month			UNCSX	1L5NC	11.93										
	Local Channel - Dedicated - STS-1 - Facility Termination per month			UNCSX	ULDFS	435.10	452.52	264.53	119.75	83.77		15.69				
UNBUNDLED LOCAL EXCHANGE SWITCHING(PORTS)																
Exchange Ports																
NOTE: Although the Port Rate includes all available features in GA, KY, LA & TN, the desired features will need to be ordered using retail USOCs																
2-WIRE VOICE GRADE LINE PORT RATES (RES)																
	Exchange Ports - 2-Wire Analog Line Port- Res.			UEPSR	UEPRL	1.65	2.38	2.28	1.42	1.33		15.69				
	Exchange Ports - 2-Wire Analog Line Port with Caller ID - Res.			UEPSR	UEPRC	1.65	2.38	2.28	1.42	1.33		15.69				
	Exchange Ports - 2-Wire Analog Line Port outgoing only - Res.			UEPSR	UEPRO	1.65	2.38	2.28	1.42	1.33		15.69				
	Exchange Ports - 2-Wire VG unbundled SC extended local dialing parity Port with Caller ID - Res.			UEPSR	UEPAU	1.65	2.38	2.28	1.42	1.33		15.69				
	Exchange Ports - 2-Wire VG unbundled South Carolina Area Calling port with Caller ID - Res (LW8)			UEPSR	UEPAJ	1.65	2.38	2.28	1.42	1.33		15.69				
	Exchange Ports - 2-Wire VG unbundled res, low usage line port with Caller ID (LUM)			UEPSR	UEPAP	1.65	2.38	2.28	1.42	1.33		15.69				
	Subsequent Activity			UEPSR	USASC	0.00	0.00	0.00				15.69				
FEATURES																

CATEGORY	RATE ELEMENTS	Interim	Zone	BCS	USOC	RATES($) Rec	Nonrecurring First	Nonrecurring Add'l	Nonrecurring Disconnect First	Nonrecurring Disconnect Add'l	Svc Order Submitted Elec per LSR	Svc Order Submitted Manually per LSR	Incremental Charge - Manual Svc Order vs. Electronic-1st	Incremental Charge - Manual Svc Order vs. Electronic-Add'l	Incremental Charge - Manual Svc Order vs. Electronic-Disc 1st	Incremental Charge - Manual Svc Order vs. Electronic-Disc Add'l
											OSS Rates($)					
											SOMEC	SOMAN	SOMAN	SOMAN	SOMAN	SOMAN
	All Available Vertical Features			UEPSR	UEPVF	3.04	0.00	0.00				15.69				
2-WIRE VOICE GRADE LINE PORT RATES (BUS)																
	Exchange Ports - 2-Wire Analog Line Port without Caller ID - Bus			UEPSB	UEPBL	1.65	2.38	2.28	1.42	1.33		15.69				
	Exchange Ports - 2-Wire VG unbundled Line Port with unbundled port with Caller+E484 ID - Bus.			UEPSB	UEPBC	1.65	2.38	2.28	1.42	1.33		15.69				
	Exchange Ports - 2-Wire Analog Line Port outgoing only - Bus.			UEPSB	UEPBO	1.65	2.38	2.28	1.42	1.33		15.69				
	Exchange Ports - 2-Wire VG unbundled SC extended local dialing parity Port with Caller ID - Bus.			UEPSB	UEPAZ	1.65	2.38	2.28	1.42	1.33		15.69				
	Exhange Ports - 2-Wire VG unbundled incoming only port with Caller ID - Bus			UEPSB	UEPB1	1.65	2.38	2.28	1.42	1.33		15.69				
	Exchange Ports - 2-Wire VG unbundled South Carolina Bus Area Calling Port with Caller ID - Bus (LMB)			UEPSB	UEPAB	1.65	2.38	2.28	1.42	1.33		15.69				
	Subsequent Activity			UEPSB	USASC	0.00	0.00	0.00				15.69				
FEATURES																
	All Available Vertical Features			UEPSB	UEPVF	3.04	0.00	0.00				15.69				
	All Available Vertical Features				UEPVF	3.04	0.00	0.00				15.69				
EXCHANGE PORT RATES (DID & PBX)																
	2-Wire VG Unbundled 2-Way PBX Trunk - Res			UEPSE	UEPRD	1.65	31.34	14.88	13.97	0.90		15.69				
	2-Wire VG Line Side Unbundled 2-Way PBX Trunk - Bus			UEPSP	UEPPC	1.65	31.34	14.88	13.97	0.90		15.69				
	2-Wire VG Line Side Unbundled Outward PBX Trunk - Bus			UEPSP	UEPPO	1.65	31.34	14.88	13.97	0.90		15.69				
	2-Wire VG Line Side Unbundled Incoming PBX Trunk - Bus			UEPSP	UEPP1	1.65	31.34	14.88	13.97	0.90		15.69				
	2-Wire Analog Long Distance Terminal PBX Trunk - Bus			UEPSP	UEPLD	1.65	31.34	14.88	13.97	0.90		15.69				
	2-Wire Voice Unbundled PBX LD Terminal Ports			UEPSP	UEPLD	1.65	31.34	14.88	13.97	0.90		15.69				
	2-Wire Vice Unbundled 2-Way PBX Usage Port			UEPSP	UEPXA	1.65	31.34	14.88	13.97	0.90		15.69				
	2-Wire Voice Unbundled PBX Toll Terminal Hotel Ports			UEPSP	UEPXB	1.65	31.34	14.88	13.97	0.90		15.69				
	2-Wire Voice Unbundled PBX LD DDD Terminals Port			UEPSP	UEPXC	1.65	31.34	14.88	13.97	0.90		15.69				
	2-Wire Voice Unbundled PBX LD Terminal Switchboard Port			UEPSP	UEPXD	1.65	31.34	14.88	13.97	0.90		15.69				
	2-Wire Voice Unbundled PBX LD Terminal Switchboard IDD Capable Port			UEPSP	UEPXE	1.65	31.34	14.88	13.97	0.90		15.69				
	2-Wire Voice Unbundled 2-Way PBX Hotel/Hospital Economy Administrative Calling Port			UEPSP	UEPXL	1.65	31.34	14.88	13.97	0.90		15.69				
	2-Wire Voice Unbundled 2-Way PBX Hotel/Hospital Economy Room Calling Port			UEPSP	UEPXM	1.65	31.34	14.88	13.97	0.90		15.69				
	2-Wire Voice Unbundled 1-Way Outgoing PBX Hotel/Hospital Discount Room Calling Port			UEPSP	UEPXO	1.65	31.34	14.88	13.97	0.90		15.69				
	2-Wire Voice Unbundled 1-Way Outgoing PBX Measured Port			UEPSP	UEPXS	1.65	31.34	14.88	13.97	0.90		15.69				
	2-Wire Voice Unbundled 2-Way PBX South Carolina Area Plus Calling Port			UEPSP	UEPXT	1.65	31.34	14.88	13.97	0.90		15.69				
	Subsequent Activity			UEPSP	USASC	0.00	0.00	0.00				15.69				
FEATURES																
	All Available Vertical Features			UEPSP UEPSE	UEPVF	3.04	0.00	0.00				15.69				
EXCHANGE PORT RATES (COIN)																
	Exchange Ports - Coin Port					1.65	2.38	2.28	1.42	1.33		15.69				
Local Switching Features offered with Port																
NOTE: Transmission/usage charges associated with POTS circuit switched usage will also apply to circuit switched voice and/or circuit switched data transmission by B-Channels associated with 2-wire ISDN ports.																
NOTE: Access to B Channel or D Channel Packet capabilities will be available only through BFR/New Business Request Process. Rates for the packet capabilities will be determined via the Bona Fide Request/New Business Request Process.																
UNBUNDLED LOCAL EXCHANGE SWITCHING(PORTS)																
EXCHANGE PORT RATES (DID & PBX)																
	Exchange Ports - 2-Wire DID Port			UEPEX	UEPP2	8.86	119.57	18.78	60.03	3.77		15.69				
	Exchange Ports - DDITS Port - 4-Wire DS1 Port with DID capability			UEPDD	UEPDD	73.62	202.47	95.90	72.75	2.47		15.69				
	Exchange Ports - 2-Wire ISDN Port (See Notes below.)			UEPTX UEPSX	U1PMA	13.38	72.93	53.11	47.90	10.76		15.69				
	All Features Offered			UEPTX UEPSX	UEPVF	3.04	0.00	0.00								
NOTE: Transmission/usage charges associated with POTS circuit switched usage will also apply to circuit switched voice and/or circuit switched data transmission by B-Channels associated with 2-wire ISDN ports.																
NOTE: Access to B Channel or D Channel Packet capabilities will be available only through BFR/New Business Request Process. Rates for the packet capabilities will be determined via the Bona Fide Request/New Business Request Process.																
	Exchange Ports - 2-Wire ISDN Port -- Channel Profiles			UEPTX UEPSX	U1UMA	0.00	0.00	0.00								
	Exchange Ports - 4-Wire ISDN DS1 Port			UEPEX	UEPEX	107.44	204.27	101.78	79.35	20.10		15.69				

UNBUNDLED NETWORK ELEMENTS - South Carolina													Attachment: 2		Exhibit: B	
CATEGORY	RATE ELEMENTS	Interim	Zone	BCS	USOC	RATES($)					Svc Order Submitted Elec per LSR	Svc Order Submitted Manually per LSR	Incremental Charge - Manual Svc Order vs. Electronic-1st	Incremental Charge - Manual Svc Order vs. Electronic-Add'l	Incremental Charge - Manual Svc Order vs. Electronic-Disc 1st	Incremental Charge - Manual Svc Order vs. Electronic-Disc Add'l
						Rec	Nonrecurring		Nonrecurring Disconnect		OSS Rates($)					
							First	Add'l	First	Add'l	SOMEC	SOMAN	SOMAN	SOMAN	SOMAN	SOMAN
UNBUNDLED LOCAL SWITCHING, PORT USAGE																
	End Office Switching (Port Usage)															
	End Office Switching Function, Per MOU					0.0010519										
	End Office Trunk Port - Shared, Per MOU					0.0002136										
	Tandem Switching (Port Usage) (Local or Access Tandem)															
	Tandem Switching Function Per MOU					0.0001634										
	Tandem Trunk Port - Shared, Per MOU					0.0002863										
	Common Transport															
	Common Transport - Per Mile, Per MOU					0.0000045										
	Common Transport - Facilities Termination Per MOU					0.0004095										
UNBUNDLED PORT/LOOP COMBINATIONS - COST BASED RATES																
	Cost Based Rates are applied where BellSouth is required by FCC and/or State Commission rule to provide Unbundled Local Switching or Switch Ports.															
	Features shall apply to the Unbundled Port/Loop Combination - Cost Based Rate section in the same manner as they are applied to the Stand-Alone Unbundled Port section of this Rate Exhibit.															
	End Office and Tandem Switching Usage and Common Transport Usage rates in the Port section of this rate exhibit shall apply to all combinations of loop/port network elements except for UNE Coin Port/Loop Combinations.															
	For Georgia, Kentucky, Louisiana, MIssissippi, South Carolina and Tennessee, the recurring UNE Port and Loop charges listed apply to Currently Combined and Not Currently Combined Combos. The first and additional Port nonrecurring charges apply to Not Currently Combined Combos for all states. In GA, KY, LA, MS, SC and TN these nonrecurring charges are commission ordered cost based rates and in AL, FL and NC these nonrecurring charges are Market Rates and are also listed in the Market Rate section. For Currently Combined Combos in all other states, the nonrecurring charges shall be those identified in the Nonrecurring - Currently Combined sections.															
	2-WIRE VOICE GRADE LOOP WITH 2-WIRE LINE PORT (RES)															
	UNE Port/Loop Combination Rates															
	2-Wire VG Loop/Port Combo - Zone 1		1			14.89										
	2-Wire VG Loop/Port Combo - Zone 2		2			21.52										
	2-Wire VG Loop/Port Combo - Zone 3		3			27.17										
	UNE Loop Rates															
	2-Wire Voice Grade Loop (SL1) - Zone 1		1	UEPRX	UEPLX	13.76										
	2-Wire Voice Grade Loop (SL1) - Zone 2		2	UEPRX	UEPLX	20.38										
	2-Wire Voice Grade Loop (SL1) - Zone 3		3	UEPRX	UEPLX	26.04										
	2-Wire Voice Grade Line Port Rates (Res)															
	2-Wire voice unbundled port - residence			UEPRX	UEPRL	1.13	37.93	16.72				15.69				
	2-Wire voice unbundled port with Caller ID - res			UEPRX	UEPRC	1.13	37.93	16.72				15.69				
	2-Wire voice unbundled port outgoing only - res			UEPRX	UEPRO	1.13	37.93	16.72				15.69				
	2-Wire voice Grade unbundled South Carolina extended local dialing parity port with Caller ID - res			UEPRX	UEPAU	1.13	37.93	16.72				15.69				
	2-Wire voice unbundled South Carolina Area Calling port with Caller ID - res (LW8)			UEPRX	UEPAJ	1.13	37.93	16.72				15.69				
	2-Wire voice unbundles res, low usage line port with Caller ID (LUM)			UEPRX	UEPAP	1.13	37.93	16.72				15.69				
	FEATURES															
	All Features Offered			UEPRX	UEPVF	3.04	0.00	0.00				15.69				
	LOCAL NUMBER PORTABILITY															
	Local Number Portability (1 per port)			UEPRX	LNPCX	0.35										
	NONRECURRING CHARGES (NRCs) - CURRENTLY COMBINED															
	2-Wire Voice Grade Loop / Line Port Combination - Conversion - Switch-as-is			UEPRX	USAC2		0.10	0.10				15.69				
	2-Wire Voice Grade Loop / Line Port Combination - Conversion - Switch with change			UEPRX	USACC		0.10	0.10				15.69				
	ADDITIONAL NRCs															
	2-Wire Voice Grade Loop/Line Port Combination - Subsequent Activity			UEPRX	USAS2	0.00	0.00	0.00				15.69				
	2-WIRE VOICE GRADE LOOP WITH 2-WIRE LINE PORT (BUS)															
	UNE Port/Loop Combination Rates															
	2-Wire VG Loop/Port Combo - Zone 1		1			14.89										
	2-Wire VG Loop/Port Combo - Zone 2		2			21.52										
	2-Wire VG Loop/Port Combo - Zone 3		3			27.17										
	UNE Loop Rates															
	2-Wire Voice Grade Loop (SL1) - Zone 1		1	UEPBX	UEPLX	13.76										
	2-Wire Voice Grade Loop (SL1) - Zone 2		2	UEPBX	UEPLX	20.38										
	2-Wire Voice Grade Loop (SL1) - Zone 3		3	UEPBX	UEPLX	26.04										
	2-Wire Voice Grade Line Port (Bus)															
	2-Wire voice unbundled port without Caller ID - bus			UEPBX	UEPBL	1.13	37.93	16.72				15.69				

CATEGORY	RATE ELEMENTS	Interim	Zone	BCS	USOC	RATES($) Rec	Nonrecurring First	Nonrecurring Add'l	Nonrecurring Disconnect First	Nonrecurring Disconnect Add'l	Svc Order Submitted Elec per LSR	Svc Order Submitted Manually per LSR	OSS Rates($) Incremental Charge - Manual Svc Order vs. Electronic-1st	Incremental Charge - Manual Svc Order vs. Electronic-Add'l	Incremental Charge - Manual Svc Order vs. Electronic-Disc 1st	Incremental Charge - Manual Svc Order vs. Electronic-Disc Add'l
											SOMEC	SOMAN	SOMAN	SOMAN	SOMAN	SOMAN
	2-Wire voice unbundled port with Caller + E484 ID - bus			UEPBX	UEPBC	1.13	37.93	16.72				15.69				
	2-Wire voice unbundled port outgoing only - bus			UEPBX	UEPBO	1.13	37.93	16.72				15.69				
	2-Wire voice Grade unbundled South Carolina extended local dialing parity port with Caller ID - bus			UEPBX	UEPAZ	1.13	37.93	16.72				15.69				
	2-Wire voice unbundled incoming only port with Caller ID - Bus			UEPBX	UPEB1	1.13	37.93	16.72				15.69				
	2-Wire voice unbundled South Carolina Bus Area Calling Port with Caller ID (LMB)			UEPBX	UEPAB	1.13	37.93	16.72				15.69				
LOCAL NUMBER PORTABILITY																
	Local Number Portability (1 per port)			UEPBX	LNPCX	0.35										
FEATURES																
	All Features Offered			UEPBX	UEPVF	3.04	0.00	0.00				15.69				
NONRECURRING CHARGES (NRCs) - CURRENTLY COMBINED																
	2-Wire Voice Grade Loop / Line Port Combination - Conversion - Switch-as-is			UEPBX	USAC2		0.10	0.10				15.69				
	2-Wire Voice Grade Loop / Line Port Combination - Conversion - Switch with change			UEPBX	USACC		0.10	0.10				15.69				
ADDITIONAL NRCs																
	2-Wire Voice Grade Loop/Line Port Combination - Subsequent Activity			UEPBX	USAS2		0.00	0.00				15.69				
2-WIRE VOICE GRADE LOOP WITH 2-WIRE LINE PORT (RES - PBX)																
UNE Port/Loop Combination Rates																
	2-Wire VG Loop/Port Combo - Zone 1		1			14.89										
	2-Wire VG Loop/Port Combo - Zone 2		2			21.52										
	2-Wire VG Loop/Port Combo - Zone 3		3			27.17										
UNE Loop Rates																
	2-Wire Voice Grade Loop (SL 1) - Zone 1		1	UEPRG	UEPLX	13.76										
	2-Wire Voice Grade Loop (SL 1) - Zone 2		2	UEPRG	UEPLX	20.38										
	2-Wire Voice Grade Loop (SL 1) - Zone 3		3	UEPRG	UEPLX	26.04										
2-Wire Voice Grade Line Port Rates (RES - PBX)																
	2-Wire VG Unbundled Combination 2-Way PBX Trunk Port - Res			UEPRG	UEPRD	1.13	37.93	16.72				15.69				
LOCAL NUMBER PORTABILITY																
	Local Number Portability (1 per port)			UEPRG	LNPCP	3.15	0.00	0.00				15.69				
FEATURES																
	All Features Offered			UEPRG	UEPVF	3.04	0.00	0.00				15.69				
NONRECURRING CHARGES (NRCs) - CURRENTLY COMBINED																
	2-Wire Voice Grade Loop/ Line Port Combination (PBX) - Conversion - Switch-As-Is			UEPRG	USAC2		7.93	1.91				15.69				
	2-Wire Voice Grade Loop/ Line Port Combination (PBX) - Conversion - Switch with Change			UEPRG	USACC		7.93	1.91				15.69				
ADDITIONAL NRCs																
	2-Wire Voice Grade Loop/ Line Port Combination (PBX) - Subsequent Activity			UEPRG	USAS2	0.00	0.00	0.00				15.69				
	PBX Subsequent Activity - Change/Rearrange Multiline Hunt Group						7.34	7.34				15.69				
2-WIRE VOICE GRADE LOOP WITH 2-WIRE LINE PORT (BUS - PBX)																
UNE Port/Loop Combination Rates																
	2-Wire VG Loop/Port Combo - Zone 1		1			14.89										
	2-Wire VG Loop/Port Combo - Zone 2		2			21.52										
	2-Wire VG Loop/Port Combo - Zone 3		3			27.17										
UNE Loop Rates																
	2-Wire Voice Grade Loop (SL 1) - Zone 1		1	UEPPX	UEPLX	13.76										
	2-Wire Voice Grade Loop (SL 1) - Zone 2		2	UEPPX	UEPLX	20.38										
	2-Wire Voice Grade Loop (SL 1) - Zone 3		3	UEPPX	UEPLX	26.04										
2-Wire Voice Grade Line Port Rates (BUS - PBX)																
	Line Side Unbundled Combination 2-Way PBX Trunk Port - Bus			UEPPX	UEPPC	1.13	37.93	16.72				15.69				
	Line Side Unbundled Outward PBX Trunk Port - Bus			UEPPX	UEPPO	1.13	37.93	16.72				15.69				
	Line Side Unbundled Incoming PBX Trunk Port - Bus			UEPPX	UEPP1	1.13	37.93	16.72				15.69				

UNBUNDLED NETWORK ELEMENTS - South Carolina													Attachment: 2		Exhibit: B	
CATEGORY	RATE ELEMENTS	Interim	Zone	BCS	USOC	RATES($)					Svc Order Submitted Elec per LSR	Svc Order Submitted Manually per LSR	Incremental Charge - Manual Svc Order vs. Electronic-1st	Incremental Charge - Manual Svc Order vs. Electronic-Add'l	Incremental Charge - Manual Svc Order vs. Electronic-Disc 1st	Incremental Charge - Manual Svc Order vs. Electronic-Disc Add'l
						Rec	Nonrecurring		Nonrecurring Disconnect		OSS Rates($)					
							First	Add'l	First	Add'l	SOMEC	SOMAN	SOMAN	SOMAN	SOMAN	SOMAN
	2-Wire Voice Unbundled PBX LD Terminal Ports			UEPPX	UEPLD	1.13	37.93	16.72				15.69				
	2-Wire Voice Unbundled 2-Way Combination PBX Usage Port			UEPPX	UEPXA	1.13	37.93	16.72				15.69				
	2-Wire Voice Unbundled PBX Toll Terminal Hotel Ports			UEPPX	UEPXB	1.13	37.93	16.72				15.69				
	2-Wire Voice Unbundled PBX LD DDD Terminals Port			UEPPX	UEPXC	1.13	37.93	16.72				15.69				
	2-Wire Voice Unbundled PBX LD Terminal Switchboard Port			UEPPX	UEPXD	1.13	37.93	16.72				15.69				
	2-Wire Voice Unbundled PBX LD Terminal Switchboard IDD Capable Port			UEPPX	UEPXE	1.13	37.93	16.72				15.69				
	2-Wire Voice Unbundled 2-Way PBX Hotel/Hospital Economy Administrative Calling Port			UEPPX	UEPXL	1.13	37.93	16.72				15.69				
	2-Wire Voice Unbundled 2-Way PBX Hotel/Hospital Economy Room Calling Port			UEPPX	UEPXM	1.13	37.93	16.72				15.69				
	2-Wire Voice Unbundled 1-Way Outgoing PBX Hotel/Hospital Discount Room Calling Port			UEPPX	UEPXO	1.13	37.93	16.72				15.69				
	2-Wire Voice Unbundled 1-Way Outgoing PBX Measured Port			UEPPX	UEPXS	1.13	37.93	16.72				15.69				
	2-Wire Voice Unbundled 2-Way PBX South Carolina Area Plus Calling Port			UEPPX	UEPXT	1.13	37.93	16.72				15.69				
LOCAL NUMBER PORTABILITY																
	Local Number Portability (1 per port)			UEPPX	LNPCP	3.15	0.00	0.00				15.69				
FEATURES																
	All Features Offered			UEPPX	UEPVF	3.04	0.00	0.00				15.69				
NONRECURRING CHARGES (NRCs) - CURRENTLY COMBINED																
	2-Wire Voice Grade Loop/ Line Port Combination (PBX) - Conversion - Switch-As-Is			UEPPX	USAC2		7.93	1.91				15.69				
	2-Wire Voice Grade Loop/ Line Port Combination (PBX) - Conversion - Switch with Change			UEPPX	USACC		7.93	1.91				15.69				
ADDITIONAL NRCs																
	2-Wire Voice Grade Loop/ Line Port Combination (PBX) - Subsequent Activity			UEPPX	USAS2	0.00	0.00	0.00				15.69				
	PBX Subsequent Activity - Change/Rearrange Multiline Hunt Group						7.34	7.34				15.69				
2-WIRE VOICE GRADE LOOP WITH 2-WIRE ANALOG LINE COIN PORT																
UNE Port/Loop Combination Rates																
	2-Wire VG Coin Port/Loop Combo – Zone 1		1			14.89										
	2-Wire VG Coin Port/Loop Combo – Zone 2		2			21.52										
	2-Wire VG Coin Port/Loop Combo – Zone 3		3			27.17										
UNE Loop Rates																
	2-Wire Voice Grade Loop (SL1) - Zone 1		1	UEPCO	UEPLX	13.76										
	2-Wire Voice Grade Loop (SL1) - Zone 2		2	UEPCO	UEPLX	20.38										
	2-Wire Voice Grade Loop (SL1) - Zone 3		3	UEPCO	UEPLX	26.04										
2-Wire Voice Grade Line Ports (COIN)																
	2-Wire Coin 2-Way without Operator Screening and without Blocking (SC)			UEPCO	UEPSD	1.13	37.93	16.72				15.69				
	2-Wire Coin 2-Way with Operator Screening and Blocking: 011, 900/976, 1+DDD (SC)			UEPCO	UEPSA	1.13	37.93	16.72				15.69				
	2-Wire Coin 2-Way with Operator Screening and 011 Blocking (SC)			UEPCO	UEPSH	1.13	37.93	16.72				15.69				
	2-Wire Coin 2-Way with Operator Screening and 011 Blocking; with Dialing Parity (SC)			UEPCO	UEPSC	1.13	37.93	16.72				15.69				
	2-Wire Coin 2-Way with Operator Screening and: 900 Blocking: 900/976, 1+DDD, 011+, and Local (SC)			UEPCO	UEPCC	1.13	37.93	16.72				15.69				
	2-Wire Coin 2-W Operator Screen: 900 Block: 900/976, 1+DDD, 011+, Local; Enhanced Call OPT 3YV (SC)			UEPCO	UEPCE	1.13	37.93	16.72				15.69				
	2-Wire Coin 2-W Operator Screen: 900 Block: 900/976, 1+DDD, 011+, Local; Enhanced Call OPT AP7 (SC)			UEPCO	UEPCF	1.13	37.93	16.72				15.69				
	2-Wire Coin Outward without Blocking and without Operator Screening (SC)			UEPCO	UEPSG	1.13	37.93	16.72				15.69				
	2-Wire Coin Outward with Operator Screening and 011 Blocking (SC)			UEPCO	UEPSF	1.13	37.93	16.72				15.69				

CATEGORY	RATE ELEMENTS	Interim	Zone	BCS	USOC	RATES($) Rec	Nonrecurring First	Nonrecurring Add'l	Nonrecurring Disconnect First	Nonrecurring Disconnect Add'l	Svc Order Submitted Elec per LSR	Svc Order Submitted Manually per LSR	Incremental Charge - Manual Svc Order vs. Electronic-1st	Incremental Charge - Manual Svc Order vs. Electronic-Add'l	Incremental Charge - Manual Svc Order vs. Electronic-Disc 1st	Incremental Charge - Manual Svc Order vs. Electronic-Disc Add'l
											OSS Rates($)					
							First	Add'l	First	Add'l	SOMEC	SOMAN	SOMAN	SOMAN	SOMAN	SOMAN
	2-Wire Coin Outward with Operator Screening and Blocking: 011, 900/976, 1+DDD (SC)			UEPCO	UEPSJ	1.13	37.93	16.72				15.69				
	2-Wire Coin Outward with Operator Screening and Blocking: 900/976, 1+DDD, 011+, and Local (SC)			UEPCO	UEPCM	1.13	37.93	16.72				15.69				
	2-Wire Coin Out Operator Screen & Block: 900/976, 1+DDD, 011+, Local; Enhanced Calling OPT 3YW (SC)			UEPCO	UEPCP	1.13	37.93	16.72				15.69				
	2-Wire 2-Way Smartline with 900/976 (all states except LA)			UEPCO	UEPCK	1.13	37.93	16.72				15.69				
	2-Wire Coin Outward Smartline with 900/976 (all states except LA)			UEPCO	UEPCR	1.13	37.93	16.72				15.69				
ADDITIONAL UNE COIN PORT/LOOP (RC)																
	UNE Coin Port/Loop Combo Usage (Flat Rate)			UEPCO	URECU	4.05	37.93	16.72				15.69				
LOCAL NUMBER PORTABILITY																
	Local Number Portability (1 per port)			UEPCO	LNPCX	0.35										
NONRECURRING CHARGES - CURRENTLY COMBINED																
	2-Wire Voice Grade Loop / Line Port Combination - Conversion - Switch-as-is			UEPCO	USAC2		0.10	0.10				15.69				
	2-Wire Voice Grade Loop / Line Port Combination - Conversion - Switch with change			UEPCO	USACC		0.10	0.10				15.69				
ADDITIONAL NRCs																
	2-Wire Voice Grade Loop/Line Port Combination - Subsequent Activity			UEPCO	USAS2		0.00	0.00				15.69				
UNBUNDLED REMOTE CALL FORWARDING - RES																
Non-Recurring																
UNBUNDLED REMOTE CALL FORWARDING - Bus																
	Unbundled Remote Call Forwarding, InterState/Intra LATA-Bus			UEPVB	UEPVJ	1.65	2.38	2.28	1.42	1.33		15.69				
Non-Recurring																
2-WIRE VOICE LOOP/ 2WIRE VOICE GRADE IO TRANSPORT/ 2-WIRE LINE PORT (RES)																
2-WIRE VOICE LOOP/ 2WIRE VOICE GRADE IO TRANSPORT/ 2-WIRE LINE PORT (BUS)																
UNBUNDLED PORT/LOOP COMBINATIONS - COST BASED RATES																
2-WIRE VOICE GRADE LOOP- BUS ONLY - WITH 2-WIRE DID TRUNK PORT																
UNE Port/Loop Combination Rates																
	2-Wire VG Loop/2-Wire DID Trunk Port Combo - UNE Zone 1		1			23.75										
	2-Wire VG Loop/2-Wire DID Trunk Port Combo - UNE Zone 2		2			30.20										
	2-Wire VG Loop/2-Wire DID Trunk Port Combo - UNE Zone 3		3			35.52										
UNE Loop Rates																
	2-Wire Analog Voice Grade Loop - (SL2) - UNE Zone 1		1	UEPPX	UECD1	16.68										
	2-Wire Analog Voice Grade Loop - (SL2) - UNE Zone 2		2	UEPPX	UECD1	23.13										
	2-Wire Analog Voice Grade Loop - (SL2) - UNE Zone 3		3	UEPPX	UECD1	28.46										
UNE Port Rate																
	Exchange Ports - 2-Wire DID Port			UEPPX	UEPD1	7.06	225.55	87.21	113.08	14.38			15.69			
NONRECURRING CHARGES - CURRENTLY COMBINED																
	2-Wire Voice Grade Loop / 2-Wire DID Trunk Port Combination - Switch-as-is			UEPPX	USAC1		7.32	1.87					15.69			
	2-Wire Voice Grade Loop / 2-Wire DID Trunk Port Conversion with BellSouth Allowable Changes			UEPPX	USA1C		7.32	1.87					15.69			
ADDITIONAL NRCs																
	2-Wire DID Subsequent Activity - Add Trunks, Per Trunk			UEPPX	USAS1		26.84						15.69			
Telephone Number/Trunk Group Establisment Charges																
	DID Trunk Termination (One Per Port)			UEPPX	NDT	0.00	0.00	0.00					15.69			
	DID Numbers, Establish Trunk Group and Provide First Group of 20 DID Numbers			UEPPX	NDZ	0.00	0.00	0.00					15.69			
	Additional DID Numbers for each Group of 20 DID Numbers			UEPPX	ND4	0.00	0.00	0.00					15.69			
	DID Numbers, Non- consecutive DID Numbers , Per Number			UEPPX	ND5	0.00	0.00	0.00					15.69			
	Reserve Non-Consecutive DID numbers			UEPPX	ND6	0.00	0.00	0.00					15.69			
	Reserve DID Numbers			UEPPX	NDV	0.00	0.00	0.00					15.69			
LOCAL NUMBER PORTABILITY																
	Local Number Portability (1 per port)			UEPPX	LNPCP	3.15	0.00	0.00								
2-WIRE ISDN DIGITAL GRADE LOOP WITH 2-WIRE ISDN DIGITAL LINE SIDE PORT																
UNE Port/Loop Combination Rates																

UNBUNDLED NETWORK ELEMENTS - South Carolina

Attachment: 2 | Exhibit: B

CATEGORY	RATE ELEMENTS	Interim	Zone	BCS	USOC	RATES($) Rec	Nonrecurring First	Nonrecurring Add'l	Nonrecurring Disconnect First	Nonrecurring Disconnect Add'l	Svc Order Submitted Elec per LSR	Svc Order Submitted Manually per LSR	Incremental Charge - Manual Svc Order vs. Electronic- 1st	Incremental Charge - Manual Svc Order vs. Electronic- Add'l	Incremental Charge - Manual Svc Order vs. Electronic- Disc 1st	Incremental Charge - Manual Svc Order vs. Electronic- Disc Add'l
											OSS Rates($)					
											SOMEC	SOMAN	SOMAN	SOMAN	SOMAN	SOMAN
	2W ISDN Digital Grade Loop/2W ISDN Digital Line Side Port - UNE Zone 1		1	UEPPB UEPPR		30.86										
	2W ISDN Digital Grade Loop/2W ISDN Digital Line Side Port - UNE Zone 2		2	UEPPB UEPPR		38.60										
	2W ISDN Digital Grade Loop/2W ISDN Digital Line Side Port - UNE Zone 3		3	UEPPB UEPPR		44.23										
UNE Loop Rates																
	2-Wire ISDN Digital Grade Loop - UNE Zone 1		1	UEPPB UEPPR	USL2X	21.90							15.69			
	2-Wire ISDN Digital Grade Loop - UNE Zone 2		2	UEPPB UEPPR	USL2X	29.64							15.69			
	2-Wire ISDN Digital Grade Loop - UNE Zone 3		3	UEPPB UEPPR	USL2X	35.27							15.69			
UNE Port Rate																
	Exchange Port - 2-Wire ISDN Line Side Port			UEPPB UEPPR	UEPPB	8.96	190.51	133.14	100.95	21.37			15.69			
NONRECURRING CHARGES - CURRENTLY COMBINED																
	2-Wire ISDN Digital Grade Loop / 2-Wire ISDN Line Side Port Combination - Conversion			UEPPB UEPPR	USACB	0.00	38.59	27.08					15.69			
ADDITIONAL NRCs																
LOCAL NUMBER PORTABILITY																
	Local Number Portability (1 per port)			UEPPB UEPPR	LNPCX	0.35	0.00	0.00								
B-CHANNEL USER PROFILE ACCESS:																
	CVS/CSD (DMS/5ESS)			UEPPB UEPPR	U1UCA	0.00	0.00	0.00								
	CVS (EWSD)			UEPPB UEPPR	U1UCB	0.00	0.00	0.00								
	CSD			UEPPB UEPPR	U1UCC	0.00	0.00	0.00								
B-CHANNEL AREA PLUS USER PROFILE ACCESS: (AL,KY,LA,MS SC,MS, & TN)																
	CVS/CSD (DMS/5ESS)			UEPPB UEPPR	U1UCD	0.00	0.00	0.00								
	CVS (EWSD)			UEPPB UEPPR	U1UCE	0.00	0.00	0.00								
	CSD			UEPPB UEPPR	U1UCF	0.00	0.00	0.00								
USER TERMINAL PROFILE																
	User Terminal Profile (EWSD only)			UEPPB UEPPR	U1UMA	0.00	0.00	0.00								
VERTICAL FEATURES																
	All Vertical Features - One per Channel B User Profile			UEPPB UEPPR	UEPVF	3.04	0.00	0.00					15.69			
INTEROFFICE CHANNEL MILEAGE																
	Interoffice Channel mileage each, including first mile and facilities termination			UEPPB UEPPR	M1GNC	24.30	40.63	27.47	16.77	6.91			15.69			
	Interoffice Channel mileage each, additional mile			UEPPB UEPPR	M1GNM	0.0167	0.00	0.00								
4-WIRE DS1 DIGITAL LOOP WITH 4-WIRE ISDN DS1 DIGITAL TRUNK PORT																
UNE Port/Loop Combination Rates																
	4W DS1 Digital Loop/4W ISDN DS1 Digital Trunk Port - UNE Zone 1		1	UEPPP		176.82										
	4W DS1 Digital Loop/4W ISDN DS1 Digital Trunk Port - UNE Zone 2		2	UEPPP		241.38										
	4W DS1 Digital Loop/4W ISDN DS1 Digital Trunk Port - UNE Zone 3		3	UEPPP		347.84										
UNE Loop Rates																
	4-Wire DS1 Digital Loop - UNE Zone 1		1	UEPPP	USL4P	90.87							15.69			
	4-Wire DS1 Digital Loop - UNE Zone 2		2	UEPPP	USL4P	155.43							15.69			
	4-Wire DS1 Digital Loop - UNE Zone 3		3	UEPPP	USL4P	261.89							15.69			
UNE Port Rate																
	Exchange Ports - 4-Wire ISDN DS1 Port			UEPPP	UEPPP	85.95	457.30	259.67	124.15	31.83			15.69			
NONRECURRING CHARGES - CURRENTLY COMBINED																
	4-Wire DS1 Digital Loop / 4-Wire ISDN DS1 Digital Trunk Port Combination - Conversion -Switch-as-is			UEPPP	USACP	0.00	119.34	78.73					15.69			
ADDITIONAL NRCs																
	4-Wire DS1 Loop/4-W ISDN Digtl Trk Port - Subsqt Actvy-Inward/two way tel nos within Std Allowance (except NC)			UEPPP	PR7TF		0.49	0.49					15.69			
	4-Wire DS1 Loop / 4-Wire ISDN DS1 Digital Trunk Port - Outward Tel Numbers (All States except NC)			UEPPP	PR7TO		11.54	11.54					15.69			
	4-Wire DS1 Loop / 4-Wire ISDN DS1 Digital Trk Port - Subsequent Inward Tel Nos Above Std Allowance			UEPPP	PR7ZT		23.07	23.07					15.69			

UNBUNDLED NETWORK ELEMENTS - South Carolina													Attachment: 2		Exhibit: B	
CATEGORY	RATE ELEMENTS	Interim	Zone	BCS	USOC	RATES($)					Svc Order Submitted Elec per LSR	Svc Order Submitted Manually per LSR	Incremental Charge - Manual Svc Order vs. Electronic- 1st	Incremental Charge - Manual Svc Order vs. Electronic- Add'l	Incremental Charge - Manual Svc Order vs. Electronic- Disc 1st	Incremental Charge - Manual Svc Order vs. Electronic- Disc Add'l
						Rec	Nonrecurring		Nonrecurring Disconnect		OSS Rates($)					
							First	Add'l	First	Add'l	SOMEC	SOMAN	SOMAN	SOMAN	SOMAN	SOMAN
	LOCAL NUMBER PORTABILITY															
	Local Number Portability (1 per port)			UEPPP	LNPCN	1.75										
	Voice/Data			UEPPP	PR71V	0.00	0.00	0.00								
	Digital Data			UEPPP	PR71D	0.00	0.00	0.00								
	Inward Data			UEPPP	PR71E	0.00	0.00	0.00								
	New or Additional "B" Channel															
	New or Additional - Voice/Data B Channel			UEPPP	PR7BV	0.00	14.56						15.69			
	New or Additional - Digital Data B Channel			UEPPP	PR7BF	0.00	14.56						15.69			
	New or Additional Inward Data B Channel			UEPPP	PR7BD	0.00	14.56						15.69			
	CALL TYPES															
	Inward			UEPPP	PR7C1	0.00	0.00	0.00								
	Outward			UEPPP	PR7C0	0.00	0.00	0.00								
	Two-way			UEPPP	PR7CC	0.00	0.00	0.00								
	Interoffice Channel Mileage															
	Fixed Each Including First Mile			UEPPP	1LN1A	77.4815	89.47	81.99	16.39	14.48			15.69			
	Each Airline-Fractional Additional Mile			UEPPP	1LN1B	0.3415										
	4-WIRE DS1 DIGITAL LOOP WITH 4-WIRE DDITS TRUNK PORT															
	UNE Port/Loop Combination Rates															
	4W DS1 Digital Loop/4W DDITS Trunk Port - UNE Zone 1		1	UEPDC		149.77										
	4W DS1 Digital Loop/4W DDITS Trunk Port - UNE Zone 2		2	UEPDC		214.33										
	4W DS1 Digital Loop/4W DDITS Trunk Port - UNE Zone 3		3	UEPDC		320.78										
	UNE Loop Rates															
	4-Wire DS1 Digital Loop - UNE Zone 1		1	UEPDC	USLDC	90.87							15.69			
	4-Wire DS1 Digital Loop - UNE Zone 2		2	UEPDC	USLDC	155.43							15.69			
	4-Wire DS1 Digital Loop - UNE Zone 3		3	UEPDC	USLDC	261.89							15.69			
	UNE Port Rate															
	4-Wire DDITS Digital Trunk Port			UEPDC	UDD1T	58.90	455.50	253.79	117.55	14.20			15.69			
	NONRECURRING CHARGES - CURRENTLY COMBINED															
	4-Wire DS1 Digital Loop / 4-Wire DDITS Trunk Port Combination - Switch-as-is			UEPDC	USAC4		129.78	67.17					15.69			
	4-Wire DS1 Digital Loop / 4-Wire DDITS Trunk Port Combination - Conversion with DS1 Changes			UEPDC	USAWA		129.78	67.17					15.69			
	4-Wire DS1 Digital Loop / 4-Wire DDITS Trunk Port Combination - Conversion with Change - Trunk			UEPDC	USAWB		129.78	67.17					15.69			
	ADDITIONAL NRCs															
	4-Wire DS1 Loop / 4-Wire DDITS Trunk Port - Subsequent Channel Activation/Chan - 1-Way Outward Trunk			UEPDC	UDTTB		14.51	14.51					15.69			
	4-Wire DS1 Loop / 4-Wire DDITS Trunk Port - Subsqnt Channel Activation/Chan Inward Trunk w/out DID			UEPDC	UDTTC		14.51	14.51					15.69			
	4-Wire DS1 Loop / 4-Wire DDITS Trunk Port - Subsqnt Chan Activation Per Chan - Inward Trunk with DID			UEPDC	UDTTD		14.51	14.51					15.69			
	4-Wire DS1 Loop / 4-Wire DDITS Trunk Port - Subsqnt Chan Activation / Chan - 2-Way DID w User Trans			UEPDC	UDTTE		14.51	14.51					15.69			
	BIPOLAR 8 ZERO SUBSTITUTION												15.69			
	B8ZS -Superframe Format			UEPDC	CCOSF		0.00	605.00					15.69			
	B8ZS - Extended Superframe Format			UEPDC	CCOEF		0.00	605.00					15.69			
	Alternate Mark Inversion															
	AMI -Superframe Format			UEPDC	MCOSF		0.00	0.00								
	AMI - Extended SuperFrame Format			UEPDC	MCOPO		0.00	0.00								
	Telephone Number/Trunk Group Establisment Charges															
	Telephone Number for 2-Way Trunk Group			UEPDC	UDTGX	0.00							15.69			
	Telephone Number for 1-Way Outward Trunk Group			UEPDC	UDTGY	0.00							15.69			
	Telephone Number for 1-Way Inward Trunk Group Without DID			UEPDC	UDTGZ	0.00							15.69			
	DID Numbers, Establish Trunk Group and Provide First Group of 20 DID Numbers			UEPDC	NDZ	0.00	0.00	0.00					15.69			
	DID Numbers for each Group of 20 DID Numbers			UEPDC	ND4	0.00							15.69			
	DID Numbers, Non- consecutive DID Numbers , Per Number			UEPDC	ND5	0.00	0.00	0.00					15.69			
	Reserve Non-Consecutive DID Nos.			UEPDC	ND6	0.00	0.00	0.00					15.69			
	Reserve DID Numbers			UEPDC	NDV	0.00	0.00	0.00					15.69			

CATEGORY	RATE ELEMENTS	Interim	Zone	BCS	USOC	RATES($) Rec	Nonrecurring First	Nonrecurring Add'l	Nonrecurring Disconnect First	Nonrecurring Disconnect Add'l	Svc Order Submitted Elec per LSR	Svc Order Submitted Manually per LSR	Incremental Charge - Manual Svc Order vs. Electronic-1st	Incremental Charge - Manual Svc Order vs. Electronic-Add'l	Incremental Charge - Manual Svc Order vs. Electronic-Disc 1st	Incremental Charge - Manual Svc Order vs. Electronic-Disc Add'l
											OSS Rates($)					
											SOMEC	SOMAN	SOMAN	SOMAN	SOMAN	SOMAN
	Dedicated DS1 (Interoffice Channel Mileage) - FX/FCO for 4-Wire DS1 Digital Loop with 4-Wire DDITS Trunk Port															
	Interoffice Channel Mileage - Fixed rate 0-8 miles (Facilities Termination)			UEPDC	1LNO1	77.14	89.47	81.99	16.39	14.48			15.69			
	Interoffice Channel Mileage - Additional rate per mile - 0-8 miles			UEPDC	1LNOA	0.3415	0.00	0.00								
	Interoffice Channel Mileage - Fixed rate 9-25 miles (Facilities Termination)			UEPDC	1LNO2	0.00	0.00	0.00								
	Interoffice Channel Mileage - Additional rate per mile - 9-25 miles			UEPDC	1LNOB	0.3415	0.00	0.00								
	Interoffice Channel Mileage - Fixed rate 25+ miles (Facilities Termination)			UEPDC	1LNO3	0.00	0.00	0.00								
	Interoffice Channel Mileage - Additional rate per mile - 25+ miles			UEPDC	1LNOC	0.3415	0.00	0.00								
	Local Number Portability, per DS0 Activated			UEPDC	LNPCP	3.15	0.00	0.00								
	Central Office Termininating Point			UEPDC	CTG	0.00										
	4-WIRE DS1 LOOP WITH CHANNELIZATION WITH PORT															
	System is 1 DS1 Loop, 1 D4 Channel Bank, and up to 24 Feature Activations															
	Each System can have up to 24 combinations of rates depending on type and number of ports used															
	UNE DS1 Loop															
	4-Wire DS1 Loop - UNE Zone 1		1	UEPMG	USLDC	90.87	0.00	0.00								
	4-Wire DS1 Loop - UNE Zone 2		2	UEPMG	USLDC	155.43	0.00	0.00								
	4-Wire DS1 Loop - UNE Zone 3		3	UEPMG	USLDC	261.89	0.00	0.00								
	UNE DSO Channelization Capacities (D4 Channel Bank Configurations)															
	24 DSO Channel Capacity - 1 per DS1			UEPMG	VUM24	82.78	0.00	0.00					15.69			
	48 DSO Channel Capacity - 1 per 2 DS1s			UEPMG	VUM48	165.56	0.00	0.00					15.69			
	96 DSO Channel Capacity -1per 4 DS1s			UEPMG	VUM96	331.12	0.00	0.00					15.69			
	144 DS0 Channel Capacity - 1 per 6 DS1s			UEPMG	VUM14	496.68	0.00	0.00					15.69			
	192 DS0 Channel Capacity -1 per 8 DS1s			UEPMG	VUM19	662.24	0.00	0.00					15.69			
	240 DS0 Channel Capacity - 1 per 10 DS1s			UEPMG	VUM20	827.80	0.00	0.00					15.69			
	288 DS0 Channel Capacity - 1 per 12 DS1s			UEPMG	VUM28	993.36	0.00	0.00					15.69			
	384 DS0 Channel Capacity - 1 per 16 DS1s			UEPMG	VUM38	1,324.48	0.00	0.00					15.69			
	480 DS0 Channel Capacity - 1 per 20 DS1s			UEPMG	VUM40	1,655.60	0.00	0.00					15.69			
	576 DS0 Channel Capacity -1 per 24 DS1s			UEPMG	VUM57	1,986.72	0.00	0.00					15.69			
	672 DS0 Channel Capacity - 1 per 28 DS1s			UEPMG	VUM67	2,317.84	0.00	0.00					15.69			
	Non-Recurring Charges (NRC) Associated with 4-Wire DS1 Loop with Channeliztion with Port - Conversion Charge Based on a System															
	A Minimum System configuration is One (1) DS1, One (1) D4 Channel Bank, and Up To 24 DSO Ports with Feature Activations.															
	Multiples of this configuration functioning as one are considered Add'l after the minimum system configuration is counted.															
	NRC - Conversion (Currently Combined) with or without BellSouth Allowed Changes			UEPMG	USAC4	0.00	150.81	8.38					15.69			
	System Additions at End User Locations Where 4-Wire DS1 Loop with Channelization with Port Combination Currently Exists and															
	New (Not Currently Combined) In GA, KY, LA, MS & TN Only															
	1 DS1/D4 Channel Bank - Add NRC for each Port and Assoc Fea Activation - New GA, LA, KY, MS, &TN Only			UEPMG	VUMD4	0.00	717.71	425.81	149.08	17.69			15.69			
	Bipolar 8 Zero Substitution															
	Clear Channel Capability Format, superframe - Subsequent Activity Only			UEPMG	CCOSF	0.00	0.00	605.00								
	Clear Channel Capability Format - Extended Superframe - Subsequent Activity Only			UEPMG	CCOEF	0.00	0.00	605.00								
	Alternate Mark Inversion (AMI)															
	Superframe Format			UEPMG	MCOSF	0.00	0.00	0.00								
	Extended Superframe Format			UEPMG	MCOPO	0.00	0.00	0.00								
	Exchange Ports Associated with 4-Wire DS1 Loop with Channelization with Port															
	Exchange Ports															
	Line Side Combination Channelized PBX Trunk Port - Business			UEPPX	UEPCX	1.13	0.00	0.00	0.00	0.00			15.69			
	Line Side Outward Channelized PBX Trunk Port - Business			UEPPX	UEPOX	1.13	0.00	0.00	0.00	0.00			15.69			
	Line Side Inward Only Channelized PBX Trunk Port without DID			UEPPX	UEP1X	1.13	0.00	0.00	0.00	0.00			15.69			
	2-Wire Trunk Side Unbundled Channelized DID Trunk Port			UEPPX	UEPDM	7.09	0.00	0.00	0.00	0.00			15.69			

UNBUNDLED NETWORK ELEMENTS - South Carolina

Attachment: 2 | Exhibit: B

CATEGORY	RATE ELEMENTS	Interim	Zone	BCS	USOC	RATES($) Rec	Nonrecurring First	Nonrecurring Add'l	Nonrecurring Disconnect First	Nonrecurring Disconnect Add'l	Svc Order Submitted Elec per LSR	Svc Order Submitted Manually per LSR	Incremental Charge - Manual Svc Order vs. Electronic-1st	Incremental Charge - Manual Svc Order vs. Electronic-Add'l	Incremental Charge - Manual Svc Order vs. Electronic-Disc 1st	Incremental Charge - Manual Svc Order vs. Electronic-Disc Add'l
											OSS Rates($)					
							First	Add'l	First	Add'l	SOMEC	SOMAN	SOMAN	SOMAN	SOMAN	SOMAN
	Feature Activations - Unbundled Loop Concentration															
	Feature (Service) Activation for each Line Side Port Terminated in D4 Bank			UEPPX	1PQWM	0.56	25.45	13.44	4.20	4.17			15.69			
	Feature (Service) Activation for each Trunk Side Port Terminated in D4 Bank			UEPPX	1PQWU	0.56	78.31	18.46	59.37	11.60			15.69			
	Telephone Number/ Group Establishment Charges for DID Service															
	DID Trunk Termination (1 per Port)			UEPPX	NDT	0.00	0.00	0.00								
	Estab Trk Grp and Provide 1st 20 DID Nos. (FL,GA, NC,& SC)			UEPPX	NDZ	0.00	0.00	0.00								
	DID Numbers - groups of 20 - Valid all States			UEPPX	ND4	0.00	0.00	0.00								
	Non-Consecutive DID Numbers - per number			UEPPX	ND5	0.00	0.00	0.00								
	Reserve Non-Consecutive DID Numbers			UEPPX	ND6	0.00	0.00	0.00								
	Reserve DID Numbers			UEPPX	NDV	0.00	0.00	0.00								
	Local Number Portability															
	Local Number Portability - 1 per port			UEPPX	LNPCP	3.15	0.00	0.00								
	FEATURES - Vertical and Optional															
	Local Switching Features Offered with Line Side Ports Only															
	All Features Available			UEPPX	UEPVF	3.04	0.00	0.00					15.69			
UNBUNDLED PORT LOOP COMBINATIONS - MARKET RATES																
	Market Rates shall apply where BellSouth is not required to provide unbundled local switching or switch ports per FCC and/or State Commission rules.															
	These scenarios include:															
	1. Unbundled port/loop combinations that are Not Currently Combined in Alabama, Florida and North Carolina.															
	2. Unbundled port/loop combinations that are Currently Combined or Not Currently Combined in Zone 1 of the Top 8 MSAS in BellSouth's region for end users with 4 or more DS0 equivalent lines.															
	The Top 8 MSAs in BellSouth's region are: FL (Orlando, Ft. Lauderdale, Miami); GA (Atlanta); LA (New Orleans); NC (Greensboro-Winston Salem-Highpoint/Charlotte-Gastonia-Rock Hill); TN (Nashville).															
	BellSouth currently is developing the billing capability to mechanically bill the recurring and non-recurring Market Rates in this section except for nonrecurring charges for not currently combined in AL, FL and NC. In the interim where BellSouth cannot bill Market Rates, BellSouth shall bill the rates in the Cost-Based section preceding in lieu of the Market Rates and reserves the right to true-up the billing difference.															
	The Market Rate for unbundled ports includes all available features in all states.															
	End Office and Tandem Switching Usage and Common Transport Usage rates in the Port section of this rate exhibit shall apply to all combinations of loop/port network elements except for UNE Coin Port/Loop Combinations which have a flat rate usage charge (USOC: URECU).															
	For Not Currently Combined scenarios where Market Rates apply, the Nonrecurring charges are listed in the First and Additional NRC columns for each Port USOC. For Currently Combined scenarios, the Nonrecurring charges are listed in the NRC - Currently Combined section. Additional NRCs may apply also and are categorized accordingly.															
	2-WIRE VOICE GRADE LOOP WITH 2-WIRE LINE PORT (RES)															
	UNE Port/Loop Combination Rates															
	2-Wire VG Loop/Port Combo - Zone 1		1			27.76										
	2-Wire VG Loop/Port Combo - Zone 2		2			34.38										
	2-Wire VG Loop/Port Combo - Zone 3		3			40.04										
	UNE Loop Rates															
	2-Wire Voice Grade Loop (SL1) - Zone 1		1	UEPRX	UEPLX	13.76										
	2-Wire Voice Grade Loop (SL1) - Zone 2		2	UEPRX	UEPLX	20.38										
	2-Wire Voice Grade Loop (SL1) - Zone 3		3	UEPRX	UEPLX	26.04										
	2-Wire Voice Grade Line Port (Res)															
	2-Wire voice unbundled port - residence			UEPRX	UEPRL	14.00	90.00	90.00				15.69				
	2-Wire voice unbundled port with Caller ID - res			UEPRX	UEPRC	14.00	90.00	90.00				15.69				
	2-Wire voice unbundled port outgoing only - res			UEPRX	UEPRO	14.00	90.00	90.00				15.69				
	2-Wire voice unbundles res, low usage line port with Caller ID (LUM)			UEPRX	UEPAP	14.00	90.00	90.00				15.69				
	LOCAL NUMBER PORTABILITY															
	Local Number Portability (1 per port)			UEPRX	LNPCX	0.35										
	FEATURES															
	All Features Offered			UEPRX	UEPVF	0.00	0.00	0.00				15.69				
	ADDITIONAL NRCs															
	NRC - 2-Wire Voice Grade Loop/Line Port Combination - Subsequent			UEPRX	USAS2		0.00	0.00				15.69				
	2-WIRE VOICE GRADE LOOP WITH 2-WIRE LINE PORT (BUS)															
	UNE Port/Loop Combination Rates															
	2-Wire VG Loop/Port Combo - Zone 1		1			27.76										
	2-Wire VG Loop/Port Combo - Zone 2		2			34.38										
	2-Wire VG Loop/Port Combo - Zone 3		3			40.04										
	UNE Loop Rates															
	2-Wire Voice Grade Loop (SL1) - Zone 1		1	UEPBX	UEPLX	13.76										

CATEGORY	RATE ELEMENTS	Interim	Zone	BCS	USOC	RATES($) Rec	Nonrecurring First	Nonrecurring Add'l	Nonrecurring Disconnect First	Nonrecurring Disconnect Add'l	Svc Order Submitted Elec per LSR	Svc Order Submitted Manually per LSR	Incremental Charge - Manual Svc Order vs. Electronic-1st	Incremental Charge - Manual Svc Order vs. Electronic-Add'l	Incremental Charge - Manual Svc Order vs. Electronic-Disc 1st	Incremental Charge - Manual Svc Order vs. Electronic-Disc Add'l
											OSS Rates($)					
											SOMEC	SOMAN	SOMAN	SOMAN	SOMAN	SOMAN
	2-Wire Voice Grade Loop (SL1) - Zone 2		2	UEPBX	UEPLX	20.38										
	2-Wire Voice Grade Loop (SL1) - Zone 3		3	UEPBX	UEPLX	26.04										
2-Wire Voice Grade Line Port (Bus)																
	2-Wire voice unbundled port without Caller ID - bus			UEPBX	UEPBL	14.00	90.00	90.00				15.69				
	2-Wire voice unbundled port with Caller + E484 ID - bus			UEPBX	UEPBC	14.00	90.00	90.00				15.69				
	2-Wire voice unbundled port outgoing only - bus			UEPBX	UEPBO	14.00	90.00	90.00				15.69				
	2-Wire voice Grade unbundled South Carolina extended local dialing parity port with Caller ID - bus			UEPBX	UEPAZ	14.00	90.00	90.00				15.69				
	2-Wire voice unbundled South Carolina Bus Area Calling Port with Caller ID (LMB)			UEPBX	UEPAB	14.00	90.00	90.00				15.69				
LOCAL NUMBER PORTABILITY																
	Local Number Portability (1 per port)			UEPBX	LNPCX	0.35										
FEATURES																
	All Features Offered			UEPBX	UEPVF	0.00	0.00	0.00				15.69				
ADDITIONAL NRCs																
	NRC - 2-Wire Voice Grade Loop/Line Port Combination - Subsequent			UEPBX	USAS2		0.00	0.00				15.69				
2-WIRE VOICE GRADE LOOP WITH 2-WIRE LINE PORT (RES - PBX)																
UNE Port/Loop Combination Rates																
	2-Wire VG Loop/Port Combo - Zone 1		1			27.76										
	2-Wire VG Loop/Port Combo - Zone 2		2			34.38										
	2-Wire VG Loop/Port Combo - Zone 3		3			40.04										
UNE Loop Rates																
	2-Wire Voice Grade Loop (SL1) - Zone 1		1	UEPRG	UEPLX	13.76										
	2-Wire Voice Grade Loop (SL1) - Zone 2		2	UEPRG	UEPLX	20.38										
	2-Wire Voice Grade Loop (SL1) - Zone 3		3	UEPRG	UEPLX	26.04										
2-Wire Voice Grade Line Port Rates (RES - PBX)																
	2-Wire VG Unbundled Combination 2-Way PBX Trunk Port - Res			UEPRG	UEPRD	14.00	90.00	90.00				15.69				
LOCAL NUMBER PORTABILITY																
	Local Number Portability (1 per port)			UEPRG	LNPCP	3.15	0.00	0.00								
FEATURES																
	All Features Offered			UEPRG	UEPVF	0.00	0.00	0.00				15.69				
NONRECURRING CHARGES - CURRENTLY COMBINED																
ADDITIONAL NRCs																
	2 Wire Loop/Line Side Port Combination - Non feature - Subsequent Activity- Nonrecurring						0.00	0.00				15.69				
	PBX Subsequent Activity - Change/Rearrange Multiline Hunt Group						14.64	14.64				15.69				
2-WIRE VOICE GRADE LOOP WITH 2-WIRE LINE PORT (BUS - PBX)																
UNE Port/Loop Combination Rates																
	2-Wire VG Loop/Port Combo - Zone 1		1			27.76										
	2-Wire VG Loop/Port Combo - Zone 2		2			34.38										
	2-Wire VG Loop/Port Combo - Zone 3		3			40.04										
UNE Loop Rates																
	2-Wire Voice Grade Loop (SL1) - Zone 1		1	UEPPX	UEPLX	13.76										
	2-Wire Voice Grade Loop (SL1) - Zone 2		2	UEPPX	UEPLX	20.38										
	2-Wire Voice Grade Loop (SL1) - Zone 3		3	UEPPX	UEPLX	26.04										
2-Wire Voice Grade Line Port Rates (BUS - PBX)																
	Line Side Unbundled Combination 2-Way PBX Trunk Port - Bus			UEPPX	UEPPC	14.00	90.00	90.00				15.69				
	Line Side Unbundled Outward PBX Trunk Port - Bus			UEPPX	UEPPO	14.00	90.00	90.00				15.69				
	Line Side Unbundled Incoming PBX Trunk Port - Bus			UEPPX	UEPP1	14.00	90.00	90.00				15.69				
	2-Wire Voice Unbundled PBX LD Terminal Ports			UEPPX	UEPLD	14.00	90.00	90.00				15.69				
	2-Wire Voice Unbundled 2-Way Combination PBX Usage Port			UEPPX	UEPXA	14.00	90.00	90.00				15.69				
	2-Wire Voice Unbundled PBX Toll Terminal Hotel Ports			UEPPX	UEPXB	14.00	90.00	90.00				15.69				
	2-Wire Voice Unbundled PBX LD DDD Terminals Port			UEPPX	UEPXC	14.00	90.00	90.00				15.69				
	2-Wire Voice Unbundled PBX LD Terminal Switchboard Port			UEPPX	UEPXD	14.00	90.00	90.00				15.69				

UNBUNDLED NETWORK ELEMENTS - South Carolina													Attachment: 2		Exhibit: B	
CATEGORY	RATE ELEMENTS	Interim	Zone	BCS	USOC	RATES($)					Svc Order Submitted Elec per LSR	Svc Order Submitted Manually per LSR	Incremental Charge - Manual Svc Order vs. Electronic-1st	Incremental Charge - Manual Svc Order vs. Electronic-Add'l	Incremental Charge - Manual Svc Order vs. Electronic-Disc 1st	Incremental Charge - Manual Svc Order vs. Electronic-Disc Add'l
						Rec	Nonrecurring		Nonrecurring Disconnect		OSS Rates($)					
							First	Add'l	First	Add'l	SOMEC	SOMAN	SOMAN	SOMAN	SOMAN	SOMAN
	2-Wire Voice Unbundled PBX LD Terminal Switchboard IDD Capable Port			UEPPX	UEPXE	14.00	90.00	90.00				15.69				
	2-Wire Voice Unbundled 2-Way PBX Hotel/Hospital Economy Administrative Calling Port			UEPPX	UEPXL	14.00	90.00	90.00				15.69				
	2-Wire Voice Unbundled 2-Way PBX Hotel/Hospital Economy Room Calling Port			UEPPX	UEPXM	14.00	90.00	90.00				15.69				
	2-Wire Voice Unbundled 1-Way Outgoing PBX Hotel/Hospital Discount Room Calling Port			UEPPX	UEPXO	14.00	90.00	90.00				15.69				
	2-Wire Voice Unbundled 1-Way Outgoing PBX Measured Port			UEPPX	UEPXS	14.00	90.00	90.00				15.69				
LOCAL NUMBER PORTABILITY																
	Local Number Portability (1 per port)			UEPPX	LNPCP	3.15	0.00	0.00								
FEATURES																
	All Features Offered			UEPPX	UEPVF	0.00	0.00	0.00				15.69				
NONRECURRING CHARGES - CURRENTLY COMBINED																
ADDITIONAL NRCs																
	2-Wire Voice Grade Loop/ Line Port Combination - Subsequent			UEPPX	USAS2		0.00	0.00				15.69				
	2 Wire Loop/Line Side Port Combination - Non feature - Subsequent Activity- Nonrecurring						0.00	0.00				15.69				
	PBX Subsequent Activity - Change/Rearrange Multiline Hunt Group						7.34	7.34				15.69				
2-WIRE VOICE GRADE LOOP WITH 2-WIRE ANALOG LINE COIN PORT																
UNE Port/Loop Combination Rates																
	2-Wire VG Coin Port/Loop Combo – Zone 1		1			27.76										
	2-Wire VG Coin Port/Loop Combo – Zone 2		2			34.38										
	2-Wire VG Coin Port/Loop Combo – Zone 3		3			40.04										
UNE Loop Rates																
	2-Wire Voice Grade Loop (SL1) - Zone 1		1	UEPCO	UEPLX	13.76										
	2-Wire Voice Grade Loop (SL1) - Zone 2		2	UEPCO	UEPLX	20.38										
	2-Wire Voice Grade Loop (SL1) - Zone 3		3	UEPCO	UEPLX	26.04										
2-Wire Voice Grade Line Port Rates (Coin)																
	2-Wire Coin 2-Way without Operator Screening and without Blocking (SC)			UEPCO	UEPSD	14.00	90.00	90.00				15.69				
	2-Wire Coin 2-Way with Operator Screening and Blocking: 011, 900/976, 1+DDD (AL, KY, LA, MS, SC)			UEPCO	UEPRA	14.00	90.00	90.00				15.69				
	2-Wire Coin 2-Way with Operator Screening and Blocking: 011, 900/976, 1+DDD (SC)			UEPCO	UEPSA	14.00	90.00	90.00				15.69				
	2-Wire Coin 2-Way with Operator Screening and 011 Blocking (SC)			UEPCO	UEPSH	14.00	90.00	90.00				15.69				
	2-Wire Coin 2-Way with Operator Screening and 011 Blocking; with Dialing Parity (SC)			UEPCO	UEPSC	14.00	90.00	90.00				15.69				
	2-Wire Coin 2-Way with Operator Screening and Blocking: 900/976, 1+DDD, 011+, and Local (SC)			UEPCO	UEPCC	14.00	90.00	90.00				15.69				
	2-Wire Coin 2-W Oper Screen & Blocking: 900/976, 1+DDD, 011+ & Local; Enhanced Calling OPT 3YV (SC)			UEPCO	UEPCE	14.00	90.00	90.00				15.69				
	2-Wire Coin 2-W Oper Screen & Block: 900/976, 1+DDD, 011+, & Local; Enhanced Calling OPT AP7 (SC)			UEPCO	UEPCF	14.00	90.00	90.00				15.69				
	2-Wire Coin Outward without Blocking and without Operator Screening (SC)			UEPCO	UEPSG	14.00	90.00	90.00				15.69				
	2-Wire Coin Outward with Operator Screening and 011 Blocking (SC)			UEPCO	UEPSF	14.00	90.00	90.00				15.69				
	2-Wire Coin Outward with Operator Screening and Blocking: 011, 900/976, 1+DDD (SC)			UEPCO	UEPSJ	14.00	90.00	90.00				15.69				
	2-Wire Coin Outward with Operator Screening and Blocking: 900/976, 1+DDD, 011+, and Local (SC)			UEPCO	UEPCM	14.00	90.00	90.00				15.69				
	2-Wire Coin Out Oper Screen & Block: 900/976, 1+DDD, 011+, & Local ; w/ Enhanced Call OPT 3YW (SC)			UEPCO	UEPCP	14.00	90.00	90.00				15.69				
LOCAL NUMBER PORTABILITY																
	Local Number Portability (1 per port)			UEPCO	LNPCX	0.35										

CATEGORY	RATE ELEMENTS	Interim	Zone	BCS	USOC	RATES($) Rec	Nonrecurring First	Nonrecurring Add'l	Nonrecurring Disconnect First	Nonrecurring Disconnect Add'l	Svc Order Submitted Elec per LSR	Svc Order Submitted Manually per LSR	Incremental Charge - Manual Svc Order vs. Electronic- 1st	Incremental Charge - Manual Svc Order vs. Electronic- Add'l	Incremental Charge - Manual Svc Order vs. Electronic- Disc 1st	Incremental Charge - Manual Svc Order vs. Electronic- Disc Add'l
											OSS Rates($)					
											SOMEC	SOMAN	SOMAN	SOMAN	SOMAN	SOMAN
	ADDITIONAL NRCs															
	2-Wire Voice Grade Loop/ Line Port Combination - Subsequent			UEPCO	USAS2		0.00	0.00				15.69				
UNBUNDLED PORT/LOOP COMBINATIONS - MARKET BASED RATES																
	2-WIRE VOICE GRADE LOOP- BUS ONLY - WITH 2-WIRE DID TRUNK PORT															
	2-Wire VG Loop/2-Wire DID Trunk Port Combo - UNE Zone 1		1			73.68										
	2-Wire VG Loop/2-Wire DID Trunk Port Combo - UNE Zone 2		2			80.13										
	2-Wire VG Loop/2-Wire DID Trunk Port Combo - UNE Zone 3		3			85.46										
	UNE Loop Rates															
	2-Wire Analog Voice Grade Loop - (SL2) - Statewide		sw													
	2-Wire Analog Voice Grade Loop - (SL2) - UNE Zone 1		1	UEPPX	UECD1	16.68										
	2-Wire Analog Voice Grade Loop - (SL2) - UNE Zone 2		2	UEPPX	UECD1	23.13										
	2-Wire Analog Voice Grade Loop - (SL2) - UNE Zone 3		3	UEPPX	UECD1	28.46										
	UNE Port Rate															
	Exchange Ports - 2-Wire DID Port			UEPPX	UEPD1	57.00	600.00	75.00				15.69				
	NONRECURRING CHARGES - CURRENTLY COMBINED															
	2-Wire Voice Grade Loop / 2-Wire DID Trunk Port Combination - Switch-As-Is Top 8 MSAs only			UEPPX	USAC1		125.00	75.00				15.69				
	2-Wire Voice Grade Loop / 2-Wire DID Trunk Port Conversion with BellSouth Allowable Changes Top 8 MSAs only			UEPPX	USA1C		125.00	75.00				15.69				
	ADDITIONAL NRCs															
	2-Wire DID Subsequent Activity - Add Trunks, Per Trunk			UEPPX	USAS1		53.68					15.69				
	Telephone Number/Trunk Group Establisment Charges															
	DID Trunk Termination (One Per Port)			UEPPX	NDT	0.00	0.00	0.00								
	DID Numbers, Establish Trunk Group and Provide First Group of 20 DID Numbers			UEPPX	NDZ	0.00	0.00	0.00								
	Additional DID Numbers for each Group of 20 DID Numbers			UEPPX	ND4	0.00	0.00	0.00								
	DID Numbers, Non- consecutive DID Numbers , Per Number			UEPPX	ND5	0.00	0.00	0.00								
	Reserve Non-Consecutive DID numbers			UEPPX	ND6	0.00	0.00	0.00								
	Reserve DID Numbers			UEPPX	NDV	0.00	0.00	0.00								
	LOCAL NUMBER PORTABILITY															
	Local Number Portability (1 per port)			UEPPX	LNPCP	3.15	0.00	0.00								
	2-WIRE ISDN DIGITAL GRADE LOOP WITH 2-WIRE ISDN DIGITAL LINE SIDE PORT															
	UNE Port/Loop Combination Rates															
	2W ISDN Digital Grade Loop/2W ISDN Digital Line Side Port - UNE Zone 1		1	UEPPB UEPPR		76.90										
	2W ISDN Digital Grade Loop/2W ISDN Digital Line Side Port - UNE Zone 2		2	UEPPB UEPPR		84.64										
	2W ISDN Digital Grade Loop/2W ISDN Digital Line Side Port - UNE Zone 3		3	UEPPB UEPPR		90.27										
	UNE Loop Rates															
	2-Wire ISDN Digital Grade Loop - Statewide		sw	UEPPB UEPPR	USL2X											
	2-Wire ISDN Digital Grade Loop - UNE Zone 1		1	UEPPB UEPPR	USL2X	21.90										
	2-Wire ISDN Digital Grade Loop - UNE Zone 2		2	UEPPB UEPPR	USL2X	29.64										
	2-Wire ISDN Digital Grade Loop - UNE Zone 3		3	UEPPB UEPPR	USL2X	35.27										
	UNE Port Rate															
	Exchange Port - 2-Wire ISDN Line Side Port			UEPPB UEPPR	UEPPB	55.00	525.00	400.00				15.69				
	NONRECURRING CHARGES - CURRENTLY COMBINED															
	2-Wire ISDN Digital Grade Loop / 2-Wire ISDN Line Side Port Combination - Conversion - Top 8 MSAs only			UEPPB UEPPR	USACB	0.00	225.00	225.00				15.69				
	ADDITIONAL NRCs															
	LOCAL NUMBER PORTABILITY															
	Local Number Portability (1 per port)			UEPPB UEPPR	LNPCX	0.35	0.00	0.00								
	B-CHANNEL USER PROFILE ACCESS:															
	CVS/CSD (DMS/5ESS)			UEPPB UEPPR	U1UCA	0.00	0.00	0.00								
	CVS (EWSD)			UEPPB UEPPR	U1UCB	0.00	0.00	0.00								
	CSD			UEPPB UEPPR	U1UCC	0.00	0.00	0.00								

CATEGORY	RATE ELEMENTS	Interim	Zone	BCS	USOC	RATES($) Rec	Nonrecurring First	Nonrecurring Add'l	Nonrecurring Disconnect First	Nonrecurring Disconnect Add'l	Svc Order Submitted Elec per LSR	Svc Order Submitted Manually per LSR	Incremental Charge - Manual Svc Order vs. Electronic-1st	Incremental Charge - Manual Svc Order vs. Electronic-Add'l	Incremental Charge - Manual Svc Order vs. Electronic-Disc 1st	Incremental Charge - Manual Svc Order vs. Electronic-Disc Add'l
											OSS Rates($)					
											SOMEC	SOMAN	SOMAN	SOMAN	SOMAN	SOMAN
	B-CHANNEL AREA PLUS USER PROFILE ACCESS: (AL,KY,LA,MS SC,MS, & TN)															
	CVS/CSD (DMS/5ESS)			UEPPB UEPPR	U1UCD	0.00	0.00	0.00								
	CVS (EWSD)			UEPPB UEPPR	U1UCE	0.00	0.00	0.00								
	CSD			UEPPB UEPPR	U1UCF	0.00	0.00	0.00								
	USER TERMINAL PROFILE															
	User Terminal Profile (EWSD only)			UEPPB UEPPR	U1UMA	0.00	0.00	0.00								
	VERTICAL FEATURES															
	All Vertical Features - One per Channel B User Profile			UEPPB UEPPR	UEPVF	3.04	0.00	0.00								
	INTEROFFICE CHANNEL MILEAGE															
	Interoffice Channel mileage each, including first mile and facilities termination			UEPPB UEPPR	M1GNC	24.30	60.00	40.00	25.00	10.00		15.69				
	Interoffice Channel mileage each, additional mile			UEPPB UEPPR	M1GNM	0.0167	0.00	0.00								
	4-WIRE DS1 DIGITAL LOOP WITH 4-WIRE ISDN DS1 DIGITAL TRUNK PORT															
	UNE Port/Loop Combination Rates															
	4W DS1 Digital Loop/4W ISDN DS1 Digital Trunk Port - UNE Zone 1		1	UEPPP		940.87										
	4W DS1 Digital Loop/4W ISDN DS1 Digital Trunk Port - UNE Zone 2		2	UEPPP		1,005.43										
	4W DS1 Digital Loop/4W ISDN DS1 Digital Trunk Port - UNE Zone 3		3	UEPPP		1,111.89										
	UNE Loop Rates															
	4-Wire DS1 Digital Loop - UNE Zone 1		1	UEPPP	USL4P	90.87						15.69				
	4-Wire DS1 Digital Loop - UNE Zone 2		2	UEPPP	USL4P	155.43						15.69				
	4-Wire DS1 Digital Loop - UNE Zone 3		3	UEPPP	USL4P	261.89						15.69				
	UNE Port Rate															
	Exchange Ports - 4-Wire ISDN DS1 Port			UEPPP	UEPPP	850.00	1,150.00	1,150.00				15.69				
	NONRECURRING CHARGES - CURRENTLY COMBINED															
	4-Wire DS1 Digital Loop / 4-Wire ISDN DS1 Digital Trunk Port Combination - Conversion -Switch-As-Is Top 8 MSAs only			UEPPP	USACP	0.00	950.00	950.00				15.69				
	ADDITIONAL NRCs															
	4-Wire DS1 Loop / 4-Wire ISDN DS1 Digital Trunk Port - Subsequent Inward/2-Way Tel Nos - (NC Only)			UEPPP	PR7TG							15.69				
	4-Wire DS1 Loop/4-Wire ISDN Digital Trunk Port - Subsequent Activity Outward tel nos. (NC only)			UEPPP	PR7TP							15.69				
	4-Wire DS1 Loop/4-W ISDN Digtl Trk Port - Subsqt Actvy-Inward/two way tel nos within Std Allowance (except NC)			UEPPP	PR7TF		0.9822					15.69				
	4-Wire DS1 Loop / 4-Wire ISDN DS1 Digital Trunk Port - Outward Tel Numbers (All States except NC)			UEPPP	PR7TO		23.02	23.02				15.69				
	4-Wire DS1 Loop / 4-Wire ISDN DS1 Digital Trk Port - Subsequent Inward Tel Nos Above Std Allowance			UEPPP	PR7ZT		46.05	46.05				15.69				
	LOCAL NUMBER PORTABILITY															
	Local Number Portability (1 per port)			UEPPP	LNPCN	1.75										
	INTERFACE (Provsioning Only)															
	Voice/Data			UEPPP	PR71V	0.00	0.00	0.00								
	Digital Data			UEPPP	PR71D	0.00	0.00	0.00								
	Inward Data			UEPPP	PR71E	0.00	0.00	0.00								
	New or Additional "B" Channel															
	New or Additional - Voice/Data B Channel			UEPPP	PR7BV	0.00	40.00									
	New or Additional - Digital Data B Channel			UEPPP	PR7BF	0.00	40.00									
	New or Additional Inward Data B Channel			UEPPP	PR7BD	0.00	40.00									
	CALL TYPES															
	Inward			UEPPP	PR7C1	0.00	0.00	0.00								
	Outward			UEPPP	PR7C0	0.00	0.00	0.00								
	Two-way			UEPPP	PR7CC	0.00	0.00	0.00								
	Interoffice Channel Mileage															
	Fixed Each Including First Mile			UEPPP	1LN1A	77.4815	89.47	81.99	16.39	14.48		15.69				
	Each Airline-Fractional Additional Mile			UEPPP	1LN1B	0.3415										
	4-WIRE DS1 DIGITAL LOOP WITH 4-WIRE DDITS TRUNK PORT															
	UNE Port/Loop Combination Rates															

UNBUNDLED NETWORK ELEMENTS - South Carolina

Attachment: 2 | Exhibit: B

CATEGORY	RATE ELEMENTS	Interim	Zone	BCS	USOC	RATES($) Rec	Nonrecurring First	Nonrecurring Add'l	Nonrecurring Disconnect First	Nonrecurring Disconnect Add'l	Svc Order Submitted Elec per LSR	Svc Order Submitted Manually per LSR	OSS Rates($) Incremental Charge - Manual Svc Order vs. Electronic- 1st	OSS Rates($) Incremental Charge - Manual Svc Order vs. Electronic- Add'l	OSS Rates($) Incremental Charge - Manual Svc Order vs. Electronic- Disc 1st	OSS Rates($) Incremental Charge - Manual Svc Order vs. Electronic- Disc Add'l
											SOMEC	SOMAN	SOMAN	SOMAN	SOMAN	SOMAN
	4W DS1 Digital Loop/4W DDITS Trunk Port - Statewide		sw	UEPDC												
	4W DS1 Digital Loop/4W DDITS Trunk Port - UNE Zone 1		1	UEPDC		840.87										
	4W DS1 Digital Loop/4W DDITS Trunk Port - UNE Zone 2		2	UEPDC		905.43										
	4W DS1 Digital Loop/4W DDITS Trunk Port - UNE Zone 3		3	UEPDC		1,011.89										
	4W DS1 Digital Loop/4W DDITS Trunk Port - UNE Zone 4		4	UEPDC												
UNE Loop Rates																
	4-Wire DS1 Digital Loop - Statewide		sw	UEPDC	USLDC											
	4-Wire DS1 Digital Loop - UNE Zone 1		1	UEPDC	USLDC	90.87										
	4-Wire DS1 Digital Loop - UNE Zone 2		2	UEPDC	USLDC	155.43										
	4-Wire DS1 Digital Loop - UNE Zone 3		3	UEPDC	USLDC	261.89										
	4-Wire DS1 Digital Loop - UNE Zone 4		4	UEPDC	USLDC											
UNE Port Rate																
	4-Wire DDITS Digital Trunk Port			UEPDC	UDD1T	750.00	1,005.07	478.99	213.53	20.94		15.69				
NONRECURRING CHARGES - CURRENTLY COMBINED																
	4-Wire DS1 Digital Loop / 4-Wire DDITS Trunk Port Combination - Switch-As-Is Top 8 MSAs only			UEPDC	USAC4		259.56	134.33				15.69				
	4-Wire DS1 Digital Loop / 4-Wire DDITS Trunk Port Combination - Conversion with DS1 Changes Top 8 MSAs only			UEPDC	USAWA		259.56	134.33				15.69				
	4-Wire DS1 Digital Loop / 4-Wire DDITS Trunk Port Combination - Conversion with Change - Trunk Top 8 MSAs only			UEPDC	USAWB		259.56	134.33				15.69				
ADDITIONAL NRCs																
	4-Wire DS1 Loop / 4-Wire DDITS Trunk Port - Subsequent Service Activity Per Service Order			UEPDC	USAS4							15.69				
	4-Wire DS1 Loop / 4-Wire DDITS Trunk Port - NRC - Subsequent Channel Activation/Chan - 2-Way Trunk			UEPDC	UDTTA		29.01	29.01				15.69				
	4-Wire DS1 Loop / 4-Wire DDITS Trunk Port - Subsequent Channel Activation/Chan - 1-Way Outward Trunk			UEPDC	UDTTB		29.01	29.01				15.69				
	4-Wire DS1 Loop / 4-Wire DDITS Trunk Port - Subsqnt Channel Activation/Chan Inward Trunk w/out DID			UEPDC	UDTTC		29.01	29.01				15.69				
	4-Wire DS1 Loop / 4-Wire DDITS Trunk Port - Subsqnt Chan Activation Per Chan - Inward Trunk with DID			UEPDC	UDTTD		29.01	29.01				15.69				
	4-Wire DS1 Loop / 4-Wire DDITS Trunk Port - Subsqnt Chan Activation / Chan - 2-Way DID w User Trans			UEPDC	UDTTE		29.01	29.01				15.69				
BIPOLAR 8 ZERO SUBSTITUTION																
	B8ZS -Superframe Format			UEPDC	CCOSF		0.00	605.00								
	B8ZS - Extended Superframe Format			UEPDC	CCOEF		0.00	605.00								
Alternate Mark Inversion																
	AMI -Superframe Format			UEPDC	MCOSF		0.00	0.00								
	AMI - Extended SuperFrame Format			UEPDC	MCOPO		0.00	0.00								
Telephone Number/Trunk Group Establisment Charges																
	Telephone Number for 2-Way Trunk Group			UEPDC	UDTGX	0.00						15.69				
	Telephone Number for 1-Way Outward Trunk Group			UEPDC	UDTGY	0.00						15.69				
	Telephone Number for 1-Way Inward Trunk Group Without DID			UEPDC	UDTGZ	0.00						15.69				
	DID Numbers, Establish Trunk Group and Provide First Group of 20 DID Numbers			UEPDC	NDZ	0.00	0.00	0.00				15.69				
	DID Numbers for each Group of 20 DID Numbers			UEPDC	ND4	0.00						15.69				
	DID Numbers, Non- consecutive DID Numbers , Per Number			UEPDC	ND5	0.00	0.00	0.00				15.69				
	Reserve Non-Consecutive DID Nos.			UEPDC	ND6	0.00	0.00	0.00				15.69				
	Reserve DID Numbers			UEPDC	NDV	0.00	0.00	0.00				15.69				
Dedicated DS1 (Interoffice Channel Mileage) -																
FX/FCO for 4-Wire DS1 Digital Loop with 4-Wire DDITS Trunk Port																
	Interoffice Channel Mileage - Fixed rate 0-8 miles (Facilities Termination)			UEPDC	1LNO1	77.14	89.47	81.99	16.39	14.48		15.69				
	Interoffice Channel Mileage - Additional rate per mile - 0-8 miles			UEPDC	1LNOA	0.3415	0.00	0.00								
	Interoffice Channel Mileage - Fixed rate 9-25 miles (Facilities Termination)			UEPDC	1LNO2	0.00	0.00	0.00								

CATEGORY	RATE ELEMENTS	Interim	Zone	BCS	USOC	RATES($) Rec	Nonrecurring First	Nonrecurring Add'l	Nonrecurring Disconnect First	Nonrecurring Disconnect Add'l	Svc Order Submitted Elec per LSR	Svc Order Submitted Manually per LSR	Incremental Charge - Manual Svc Order vs. Electronic-1st	Incremental Charge - Manual Svc Order vs. Electronic-Add'l	Incremental Charge - Manual Svc Order vs. Electronic-Disc 1st	Incremental Charge - Manual Svc Order vs. Electronic-Disc Add'l
											OSS Rates($)					
							First	Add'l	First	Add'l	SOMEC	SOMAN	SOMAN	SOMAN	SOMAN	SOMAN
	Interoffice Channel Mileage - Additional rate per mile - 9-25 miles			UEPDC	1LNOB	0.7598	0.00	0.00								
	Interoffice Channel Mileage - Fixed rate 25+ miles (Facilities Termination)			UEPDC	1LNO3	0.00	0.00	0.00								
	Interoffice Channel Mileage - Additional rate per mile - 25+ miles			UEPDC	1LNOC	0.7598	0.00	0.00								
	Local Number Portability, per DS0 Activated			UEPDC	LNPCP	3.15	0.00	0.00								
	Central Office Termininating Point			UEPDC	CTG	0.00										
	4-WIRE DS1 LOOP WITH CHANNELIZATION WITH PORT															
	System is 1 DS1 Loop, 1 D4 Channel Bank, and up to 24 Feature Activations															
	A system can have various rate combinations based on type and number of ports used															
	UNE DS1 Loop															
	4-Wire DS1 Loop - UNE Zone 1		1	UEPMG	USLDC	90.87	0.00	0.00								
	4-Wire DS1 Loop - UNE Zone 2		2	UEPMG	USLDC	155.43	0.00	0.00								
	4-Wire DS1 Loop - UNE Zone 3		3	UEPMG	USLDC	261.89	0.00	0.00								
	UNE DSO Channelization Capacities (D4 Channel Bank Configurations)															
	24 DSO Channel Capacity - 1 per DS1			UEPMG	VUM24	103.47	0.00	0.00				15.69				
	48 DSO Channel Capacity - 1 per 2 DS1s			UEPMG	VUM48	206.94	0.00	0.00				15.69				
	96 DSO Channel Capacity -1per 4 DS1s			UEPMG	VUM96	413.88	0.00	0.00				15.69				
	144 DS0 Channel Capacity - 1 per 6 DS1s			UEPMG	VUM14	620.82	0.00	0.00				15.69				
	192 DS0 Channel Capacity -1 per 8 DS1s			UEPMG	VUM19	827.76	0.00	0.00				15.69				
	240 DS0 Channel Capacity - 1 per 10 DS1s			UEPMG	VUM20	1,034.70	0.00	0.00				15.69				
	288 DS0 Channel Capacity - 1 per 12 DS1s			UEPMG	VUM28	1,241.64	0.00	0.00				15.69				
	384 DS0 Channel Capacity - 1 per 16 DS1s			UEPMG	VUM38	1,655.52	0.00	0.00				15.69				
	480 DS0 Channel Capacity - 1 per 20 DS1s			UEPMG	VUM40	2,069.40	0.00	0.00				15.69				
	576 DS0 Channel Capacity -1 per 24 DS1s			UEPMG	VUM57	2,483.28	0.00	0.00				15.69				
	672 DS0 Channel Capacity - 1 per 28 DS1s			UEPMG	VUM67	2,897.16	0.00	0.00				15.69				
	Non-Recurring Charges (NRC) Associated with 4-Wire DS1 Loop with Channeliztion with Port - Conversion Charge Based on a System															
	A Minimum System configuration is One (1) DS1, One (1) D4 Channel Bank, and Up To 24 DSO Ports with Feature Activations.															
	Multiples of this configuration functioning as one are considered Add'l after the minimum system configuration is counted.															
	NRC - Conversion (Currently Combined) with or without BellSouth Allowed Changes - Top 8 MSAs Only			UEPMG	USAC4	0.00	150.81	8.38				15.69				
	System Additions Where Currently Combined and New (Not Currently Combined)															
	In Top 8 MSAs and AL, FL, and NC Only															
	1 DS1/D4 Channel Bank - Add NRC for each Port and Assoc Fea Activation -			UEPMG	VUMD4	0.00	717.71	425.81	149.08	17.69		15.69				
	Bipolar 8 Zero Substitution															
	Clear Channel Capability Format, superframe - Subsequent Activity Only			UEPMG	CCOSF	0.00	0.00	605.00								
	Clear Channel Capability Format - Extended Superframe - Subsequent Activity Only			UEPMG	CCOEF	0.00	0.00	605.00								
	Alternate Mark Inversion (AMI)															
	Superframe Format			UEPMG	MCOSF	0.00	0.00	0.00								
	Extended Superframe Format			UEPMG	MCOPO	0.00	0.00	0.00								
	Exchange Ports Associated with 4-Wire DS1 Loop with Channelization with Port															
	Exchange Ports															
	Line Side Combination Channelized PBX Trunk Port - Business			UEPPX	UEPCX	14.00	0.00	0.00	0.00	0.00		15.69				
	Line Side Outward Channelized PBX Trunk Port - Business			UEPPX	UEPOX	14.00	0.00	0.00	0.00	0.00		15.69				
	Line Side Inward Only Channelized PBX Trunk Port without DID			UEPPX	UEP1X	14.00	0.00	0.00	0.00	0.00		15.69				
	2-Wire Trunk Side Unbundled Channelized DID Trunk Port			UEPPX	UEPDM	57.00	0.00	0.00	0.00	0.00		15.69				
	2-Wire Channelized PBX Area Calling Service Combination Port (AL Only)			UEPPX	UEPA4											
	2 Wire Channelized PBX Area Calling Service Outgoing Only Port (AL Only)			UEPPX	UEPA3											
	Feature Activations - Unbundled Loop Concentration															
	Feature (Service) Activation for each Line Side Port Terminated in D4 Bank			UEPPX	1PQWM	0.70	40.00	20.00	6.00	5.00		15.69				

CATEGORY	RATE ELEMENTS	Interim	Zone	BCS	USOC	RATES($) Rec	Nonrecurring First	Nonrecurring Add'l	Nonrecurring Disconnect First	Nonrecurring Disconnect Add'l	Svc Order Submitted Elec per LSR	Svc Order Submitted Manually per LSR	Incremental Charge - Manual Svc Order vs. Electronic-1st	Incremental Charge - Manual Svc Order vs. Electronic-Add'l	Incremental Charge - Manual Svc Order vs. Electronic-Disc 1st	Incremental Charge - Manual Svc Order vs. Electronic-Disc Add'l
											OSS Rates($)					
							First	Add'l	First	Add'l	SOMEC	SOMAN	SOMAN	SOMAN	SOMAN	SOMAN
	Feature (Service) Activation for each Trunk Side Port Terminated in D4 Bank			UEPPX	1PQWU	0.70	110.00	30.00	65.00	20.00		15.69				
	Telephone Number/ Group Establishment Charges for DID Service															
	DID Trunk Termination (1 per Port)			UEPPX	NDT	0.00	0.00	0.00				15.69				
	Estab Trk Grp and Provide 1st 20 DID Nos. (FL,GA, NC,& SC)			UEPPX	NDZ	0.00	0.00	0.00				15.69				
	DID Numbers - groups of 20 - Valid all States			UEPPX	ND4	0.00	0.00	0.00				15.69				
	Non-Consecutive DID Numbers - per number			UEPPX	ND5	0.00	0.00	0.00				15.69				
	Reserve Non-Consecutive DID Numbers			UEPPX	ND6	0.00	0.00	0.00				15.69				
	Reserve DID Numbers			UEPPX	NDV	0.00	0.00	0.00				15.69				
	Local Number Portability															
	Local Number Portability - 1 per port			UEPPX	LNPCP	3.15	0.00	0.00								
	FEATURES - Vertical and Optional															
	Local Switching Features Offered with Line Side Ports Only															
	All Features Available			UEPPX	UEPVF	3.04	0.00	0.00				15.69				
UNBUNDLED CENTREX PORT/LOOP COMBINATIONS - COST BASED RATES																
	1. Cost Based Rates are applied where BellSouth is required by FCC and/or State Commission rule to provide Unbundled Local Switching or Switch Ports.															
	2. Features shall apply to the Unbundled Port/Loop Combination - Cost Based Rate section in the same manner as they are applied to the Stand-Alone Unbundled Port section of this Rate Exhibit.															
	3. End Office and Tandem Switching Usage and Common Transport Usage rates in the Port section of this rate exhibit shall apply to all combinations of loop/port network elements except for UNE Coin Port/Loop Combinations.															
	For Georgia, Kentucky, Louisiana, MIssissippi and Tennessee, the recurring UNE Port and Loop charges listed apply to Currently Combined and Not Currently Combined Combos. The the first and additional Port nonrecurring charges apply to Not Currently Combined Combos for all states. In GA, KY, LA, MS and TN these nonrecurring charges are commission ordered cost based rates and in AL, FL, NC and SC these nonrecurring charges are Market Rates and are listed in the Market Rate section. For Currently Combined Combos in all other states, the nonrecurring charges shall be those identified in the Nonrecurring - Currently Combined sections.															
	5. Market Rates for Unbundled Centrex Port/Loop Combination will be negotiated on an Individual Case Basis, until further notice.															
	UNE-P CENTREX - 5ESS (Valid in All States)															
	2-Wire VG Loop/2-Wire Voice Grade Port (Centrex) Combo															
	UNE Port/Loop Combination Rates (Non-Design)															
	2-Wire VG Loop/2-Wire Voice Grade Port (Centrex) Port Combo - Non-Design		1	UEP95		14.89										
	2-Wire VG Loop/2-Wire Voice Grade Port (Centrex)Port Combo - Non-Design		2	UEP95		21.52										
	2-Wire VG Loop/2-Wire Voice Grade Port (Centrex)Port Combo - Non-Design		3	UEP95		27.17										
	UNE Port/Loop Combination Rates (Design)															
	2-Wire VG Loop/2-Wire Voice Grade Port (Centrex) Port Combo - Design		1	UEP95		17.81										
	2-Wire VG Loop/2-Wire Voice Grade Port (Centrex)Port Combo - Design		2	UEP95		24.26										
	2-Wire VG Loop/2-Wire Voice Grade Port (Centrex)Port Combo - Design		3	UEP95		29.59										
	UNE Loop Rate															
	2-Wire Voice Grade Loop (SL 1) - Zone 1		1	UEP95	UECS1	13.76										
	2-Wire Voice Grade Loop (SL 1) - Zone 2		2	UEP95	UECS1	20.38										
	2-Wire Voice Grade Loop (SL 1) - Zone 3		3	UEP95	UECS1	26.04										
	2-Wire Voice Grade Loop (SL 2) - Zone 1		1	UEP95	UECS2	16.68										
	2-Wire Voice Grade Loop (SL 2) - Zone 2		2	UEP95	UECS2	23.13										
	2-Wire Voice Grade Loop (SL 2) - Zone 3		3	UEP95	UECS2	28.46										
	UNE Port Rate															
	All States															
	2-Wire Voice Grade Port (Centrex) Basic Local Area			UEP95	UEPYA	1.13	40.30	19.90	24.98	6.65		15.69				
	2-Wire Voice Grade Port (Centrex 800 termination)			UEP95	UEPYB	1.13	40.30	19.90	24.98	6.65		15.69				
	2-Wire Voice Grade Port (Centrex with Caller ID)1Basic Local Area			UEP95	UEPYH	1.13	40.30	19.90	24.98	6.65		15.69				
	2-Wire Voice Grade Port (Centrex from diff Serving Wire Center)2 Basic Local Area			UEP95	UEPYM	1.13	108.36	70.71	54.47	11.94		15.69				
	2-Wire Voice Grade Port, Diff Serving Wire Center - 800 Service Term - Basic Local Area			UEP95	UEPYZ	1.13	108.36	70.71	54.47	11.94		15.69				
	2-Wire Voice Grade Port terminated in on Megalink or equivalent - Basic Local Area			UEP95	UEPY9	1.13	40.30	19.90	24.98	6.65		15.69				
	2-Wire Voice Grade Port Terminated on 800 Service Term - Basic Local Area			UEP95	UEPY2	1.13	40.30	19.90	24.98	6.65		15.69				

CATEGORY	RATE ELEMENTS	Interim	Zone	BCS	USOC	RATES($) Rec	Nonrecurring First	Nonrecurring Add'l	Nonrecurring Disconnect First	Nonrecurring Disconnect Add'l	Svc Order Submitted Elec per LSR	Svc Order Submitted Manually per LSR	Incremental Charge - Manual Svc Order vs. Electronic-1st	Incremental Charge - Manual Svc Order vs. Electronic-Add'l	Incremental Charge - Manual Svc Order vs. Electronic-Disc 1st	Incremental Charge - Manual Svc Order vs. Electronic-Disc Add'l
											OSS Rates($)					
											SOMEC	SOMAN	SOMAN	SOMAN	SOMAN	SOMAN
AL, KY, LA, MS, SC, & TN Only																
	2-Wire Voice Grade Port (Centrex)			UEP95	UEPQA	1.13	40.30	19.90	24.98	6.65		15.69				
	2-Wire Voice Grade Port (Centrex 800 termination)			UEP95	UEPQB	1.13	40.30	19.90	24.98	6.65		15.69				
	2-Wire Voice Grade Port (Centrex with Caller ID)1			UEP95	UEPQH	1.13	40.30	19.90	24.98	6.65		15.69				
	2-Wire Voice Grade Port (Centrex from diff Serving Wire Center)2			UEP95	UEPQM	1.13	108.36	70.71	54.47	11.94		15.69				
	2-Wire Voice Grade Port, Diff Serving Wire Center - 800 Service Term			UEP95	UEPQZ	1.13	108.36	70.71	54.47	11.94		15.69				
	2-Wire Voice Grade Port terminated in on Megalink or equivalent			UEP95	UEPQ9	1.13	40.30	19.90	24.98	6.65		15.69				
	2-Wire Voice Grade Port Terminated on 800 Service Term			UEP95	UEPQ2	1.13	40.30	19.90	24.98	6.65		15.69				
Local Switching																
	Centrex Intercom Funtionality, per port			UEP95	URECS	0.7996										
Local Number Portability																
	Local Number Portability (1 per port)			UEP95	LNPCC	0.35										
Features																
	All Standard Features Offered, per port			UEP95	UEPVF	3.04						15.69				
	All Select Features Offered, per port			UEP95	UEPVS	0.00	406.42					15.69				
	All Centrex Control Features Offered, per port			UEP95	UEPVC	3.04						15.69				
NARS																
	Unbundled Network Access Register - Combination			UEP95	UARCX	0.00	0.00	0.00				15.69				
	Unbundled Network Access Register - Indial			UEP95	UAR1X	0.00	0.00	0.00				15.69				
	Unbundled Network Access Register - Outdial			UEP95	UAROX	0.00	0.00	0.00				15.69				
Miscellaneous Terminations																
2-Wire Trunk Side																
	Trunk Side Terminations, each			UEP95	CEND6	8.86	119.57	18.78	60.03	3.77		15.69				
4-Wire Digital (1.544 Megabits)																
	DS1 Circuit Terminations, each			UEP95	M1HD1	73.62	202.47	95.90	72.75	2.47		15.69				
	DS0 Channels Activated, each			UEP95	M1HDO	0.00	14.51					15.69				
Interoffice Channel Mileage - 2-Wire																
	Interoffice Channel Facilities Termination			UEP95	MIGBC	24.30	40.63	27.47	16.77	6.91		15.69				
	Interoffice Channel mileage, per mile or fraction of mile			UEP95	MIGBM	0.0167										
Feature Activations (DS0) Centrex Loops on Channelized DS1 Service																
D4 Channel Bank Feature Activations																
	Feature Activation on D-4 Channel Bank Centrex Loop Slot			UEP95	1PQWS	0.56						15.69				
	Feature Activation on D-4 Channel Bank FX line Side Loop Slot			UEP95	1PQW6	0.56						15.69				
	Feature Activation on D-4 Channel Bank FX Trunk Side Loop Slot			UEP95	1PQW7	0.56						15.69				
	Feature Activation on D-4 Channel Bank Centrex Loop Slot - Different Wire Center			UEP95	1PQWP	0.56						15.69				
	Feature Activation on D-4 Channel Bank Private Line Loop Slot			UEP95	1PQWV	0.56						15.69				
	Feature Activation on D-4 Channel Bank Tjie Line/Trunk Loop Slot			UEP95	1PQWQ	0.56						15.69				
	Feature Activation on D-4 Channel Bank WATS Loop Slot			UEP95	1PQWA	0.56						15.69				
Non-Recurring Charges (NRC) Associated with UNE-P Centrex																
	NRC Conversion Currently Combined Switch-As-Is with allowed changes, per port			UEP95	USAC2		37.93	16.72				15.69				
	New Centrex Standard Common Block			UEP95	M1ACS	0.00	668.70					15.69				
	New Centrex Customized Common Block			UEP95	M1ACC	0.00	668.70					15.69				
	NAR Establishment Charge, Per Occasion			UEP95	URECA	0.00	72.89					15.69				
UNE-P CENTREX - DMS100 (Valid in All States)																
2-Wire VG Loop/2-Wire Voice Grade Port (Centrex) Combo																
UNE Port/Loop Combination Rates (Non-Design)																
	2-Wire VG Loop/2-Wire Voice Grade Port (Centrex) Port Combo - Non-Design		1	UEP9D		14.89										
	2-Wire VG Loop/2-Wire Voice Grade Port (Centrex)Port Combo - Non-Design		2	UEP9D		21.52										

CATEGORY	RATE ELEMENTS	Interim	Zone	BCS	USOC	RATES($) Rec	Nonrecurring First	Nonrecurring Add'l	Nonrecurring Disconnect First	Nonrecurring Disconnect Add'l	Svc Order Submitted Elec per LSR	Svc Order Submitted Manually per LSR	Incremental Charge - Manual Svc Order vs. Electronic-1st	Incremental Charge - Manual Svc Order vs. Electronic-Add'l	Incremental Charge - Manual Svc Order vs. Electronic-Disc 1st	Incremental Charge - Manual Svc Order vs. Electronic-Disc Add'l
											OSS Rates($)					
							First	Add'l	First	Add'l	SOMEC	SOMAN	SOMAN	SOMAN	SOMAN	SOMAN
	2-Wire VG Loop/2-Wire Voice Grade Port (Centrex)Port Combo - Non-Design		3	UEP9D		27.17										
	UNE Port/Loop Combination Rates (Design)															
	2-Wire VG Loop/2-Wire Voice Grade Port (Centrex) Port Combo - Design		1	UEP9D		17.81										
	2-Wire VG Loop/2-Wire Voice Grade Port (Centrex)Port Combo - Design		2	UEP9D		24.26										
	2-Wire VG Loop/2-Wire Voice Grade Port (Centrex)Port Combo - Design		3	UEP9D		29.59										
	UNE Loop Rate															
	2-Wire Voice Grade Loop (SL 1) - Zone 1		1	UEP9D	UECS1	13.76										
	2-Wire Voice Grade Loop (SL 1) - Zone 2		2	UEP9D	UECS1	20.38										
	2-Wire Voice Grade Loop (SL 1) - Zone 3		3	UEP9D	UECS1	26.04										
	2-Wire Voice Grade Loop (SL 2) - Zone 1		1	UEP9D	UECS2	16.68										
	2-Wire Voice Grade Loop (SL 2) - Zone 2		2	UEP9D	UECS2	23.13										
	2-Wire Voice Grade Loop (SL 2) - Zone 3		3	UEP9D	UECS2	28.46										
	UNE Port Rate															
	ALL STATES															
	2-Wire Voice Grade Port (Centrex) Basic Local Area			UEP9D	UEPYA	1.13	40.30	19.90	24.98	6.65		15.69				
	2-Wire Voice Grade Port (Centrex 800 termination)Basic Local Area			UEP9D	UEPYB	1.13	40.30	19.90	24.98	6.65		15.69				
	2-Wire Voice Grade Port (Centrex / EBS-PSET)3Basic Local Area			UEP9D	UEPYC	1.13	40.30	19.90	24.98	6.65		15.69				
	2-Wire Voice Grade Port (Centrex / EBS-M5009)3Basic Local Area			UEP9D	UEPYD	1.13	40.30	19.90	24.98	6.65		15.69				
	2-Wire Voice Grade Port (Centrex / EBS-M5209))3 Basic Local Area			UEP9D	UEPYE	1.13	40.30	19.90	24.98	6.65		15.69				
	2-Wire Voice Grade Port (Centrex / EBS-M5112))3 Basic Local Area			UEP9D	UEPYF	1.13	40.30	19.90	24.98	6.65		15.69				
	2-Wire Voice Grade Port (Centrex / EBS-M5312))3Basic Local Area			UEP9D	UEPYG	1.13	40.30	19.90	24.98	6.65		15.69				
	2-Wire Voice Grade Port (Centrex / EBS-M5008))3 Basic Local Area			UEP9D	UEPYT	1.13	40.30	19.90	24.98	6.65		15.69				
	2-Wire Voice Grade Port (Centrex / EBS-M5208))3 Basic Local Area			UEP9D	UEPYU	1.13	40.30	19.90	24.98	6.65		15.69				
	2-Wire Voice Grade Port (Centrex / EBS-M5216))3 Basic Local Area			UEP9D	UEPYV	1.13	40.30	19.90	24.98	6.65		15.69				
	2-Wire Voice Grade Port (Centrex / EBS-M5316))3 Basic Local Area			UEP9D	UEPY3	1.13	40.30	19.90	24.98	6.65		15.69				
	2-Wire Voice Grade Port (Centrex with Caller ID) Basic Local Area			UEP9D	UEPYH	1.13	40.30	19.90	24.98	6.65		15.69				
	2-Wire Voice Grade Port (Centrex/Caller ID/Msg Wtg Lamp Indication))3 Basic Local Area			UEP9D	UEPYW	1.13	40.30	19.90	24.98	6.65		15.69				
	2-Wire Voice Grade Port (Centrex/Msg Wtg Lamp Indication))3 Basic Local Area			UEP9D	UEPYJ	1.13	40.30	19.90	24.98	6.65		15.69				
	2-Wire Voice Grade Port (Centrex from diff Serving Wire Center) 2 Basic Local Area			UEP9D	UEPYM	1.13	108.36	70.71	54.47	11.94		15.69				
	2-Wire Voice Grade Port (Centrex/differ SWC /EBS-PSET)2, 3 Basic Local Area			UEP9D	UEPYO	1.13	108.36	70.71	54.47	11.94		15.69				
	2-Wire Voice Grade Port (Centrex/differ SWC /EBS-M5009)2, 3 Basic Local Area			UEP9D	UEPYP	1.13	108.36	70.71	54.47	11.94		15.69				
	2-Wire Voice Grade Port (Centrex/differ SWC /EBS-5209)2, 3 Basic Local Area			UEP9D	UEPYQ	1.13	108.36	70.71	54.47	11.94		15.69				
	2-Wire Voice Grade Port (Centrex/differ SWC /EBS-M5112)2, 3 Basic Local Area			UEP9D	UEPYR	1.13	108.36	70.71	54.47	11.94		15.69				
	2-Wire Voice Grade Port (Centrex/differ SWC /EBS-M5312)2, 3 Basic Local Area			UEP9D	UEPYS	1.13	108.36	70.71	54.47	11.94		15.69				
	2-Wire Voice Grade Port (Centrex/differ SWC /EBS-M5008)2, 3 Basic Local Area			UEP9D	UEPY4	1.13	108.36	70.71	54.47	11.94		15.69				

CATEGORY	RATE ELEMENTS	Interim	Zone	BCS	USOC	RATES($) Rec	Nonrecurring First	Nonrecurring Add'l	Nonrecurring Disconnect First	Nonrecurring Disconnect Add'l	Svc Order Submitted Elec per LSR	Svc Order Submitted Manually per LSR	Incremental Charge - Manual Svc Order vs. Electronic-1st	Incremental Charge - Manual Svc Order vs. Electronic-Add'l	Incremental Charge - Manual Svc Order vs. Electronic-Disc 1st	Incremental Charge - Manual Svc Order vs. Electronic-Disc Add'l
											OSS Rates($)					
											SOMEC	SOMAN	SOMAN	SOMAN	SOMAN	SOMAN
	2-Wire Voice Grade Port (Centrex/differ SWC /EBS-M5208)2, 3 Basic Local Area			UEP9D	UEPY5	1.13	108.36	70.71	54.47	11.94		15.69				
	2-Wire Voice Grade Port (Centrex/differ SWC /EBS-M5216)2, 3 Basic Local Area			UEP9D	UEPY6	1.13	108.36	70.71	54.47	11.94		15.69				
	2-Wire Voice Grade Port (Centrex/differ SWC /EBS-M5316)2, 3 Basic Local Area			UEP9D	UEPY7	1.13	108.36	70.71	54.47	11.94		15.69				
	2-Wire Voice Grade Port, Diff Serving Wire Center - 800 Service Term			UEP9D	UEPYZ	1.13	108.36	70.71	54.47	11.94		15.69				
	2-Wire Voice Grade Port terminated in on Megalink or equivalent Basic Local Area			UEP9D	UEPY9	1.13	40.30	19.90	24.98	6.65		15.69				
	2-Wire Voice Grade Port Terminated on 800 Service Term Basic Local Area			UEP9D	UEPY2	1.13	40.30	19.90	24.98	6.65		15.69				
AL, KY, LA, MS, SC, & TN Only																
	2-Wire Voice Grade Port (Centrex)			UEP9D	UEPQA	1.13	40.30	19.90	24.98	6.65		15.69				
	2-Wire Voice Grade Port (Centrex 800 termination)			UEP9D	UEPQB	1.13	40.30	19.90	24.98	6.65		15.69				
	2-Wire Voice Grade Port (Centrex / EBS-PSET)3			UEP9D	UEPQC	1.13	40.30	19.90	24.98	6.65		15.69				
	2-Wire Voice Grade Port (Centrex / EBS-M5009)3			UEP9D	UEPQD	1.13	40.30	19.90	24.98	6.65		15.69				
	2-Wire Voice Grade Port (Centrex / EBS-M5209)3			UEP9D	UEPQE	1.13	40.30	19.90	24.98	6.65		15.69				
	2-Wire Voice Grade Port (Centrex / EBS-M5112)3			UEP9D	UEPQF	1.13	40.30	19.90	24.98	6.65		15.69				
	2-Wire Voice Grade Port (Centrex / EBS-M5312)3			UEP9D	UEPQG	1.13	40.30	19.90	24.98	6.65		15.69				
	2-Wire Voice Grade Port (Centrex / EBS-M5008)3			UEP9D	UEPQT	1.13	40.30	19.90	24.98	6.65		15.69				
	2-Wire Voice Grade Port (Centrex / EBS-M5208)3			UEP9D	UEPQU	1.13	40.30	19.90	24.98	6.65		15.69				
	2-Wire Voice Grade Port (Centrex / EBS-M5216)3			UEP9D	UEPQV	1.13	40.30	19.90	24.98	6.65		15.69				
	2-Wire Voice Grade Port (Centrex / EBS-M5316)3			UEP9D	UEPQ3	1.13	40.30	19.90	24.98	6.65		15.69				
	2-Wire Voice Grade Port (Centrex with Caller ID)			UEP9D	UEPQH	1.13	40.30	19.90	24.98	6.65		15.69				
	2-Wire Voice Grade Port (Centrex/Caller ID/Msg Wtg Lamp Indication)3			UEP9D	UEPQW	1.13	40.30	19.90	24.98	6.65		15.69				
	2-Wire Voice Grade Port (Centrex/Msg Wtg Lamp Indication)3			UEP9D	UEPQJ	1.13	40.30	19.90	24.98	6.65		15.69				
	2-Wire Voice Grade Port (Centrex from diff Serving Wire Center) 2			UEP9D	UEPQM	1.13	108.36	70.71	54.47	11.94		15.69				
	2-Wire Voice Grade Port (Centrex/differ SWC /EBS-PSET)2, 3			UEP9D	UEPQO	1.13	108.36	70.71	54.47	11.94		15.69				
	2-Wire Voice Grade Port (Centrex/differ SWC /EBS-M5009)2, 3			UEP9D	UEPQP	1.13	108.36	70.71	54.47	11.94		15.69				
	2-Wire Voice Grade Port (Centrex/differ SWC /EBS-5209)2, 3			UEP9D	UEPQQ	1.13	108.36	70.71	54.47	11.94		15.69				
	2-Wire Voice Grade Port (Centrex/differ SWC /EBS-M5112)2, 3			UEP9D	UEPQR	1.13	108.36	70.71	54.47	11.94		15.69				
	2-Wire Voice Grade Port (Centrex/differ SWC /EBS-M5312)2, 3			UEP9D	UEPQS	1.13	108.36	70.71	54.47	11.94		15.69				
	2-Wire Voice Grade Port (Centrex/differ SWC /EBS-M5008)2, 3			UEP9D	UEPQ4	1.13	108.36	70.71	54.47	11.94		15.69				
	2-Wire Voice Grade Port (Centrex/differ SWC /EBS-M5208)2, 3			UEP9D	UEPQ5	1.13	108.36	70.71	54.47	11.94		15.69				
	2-Wire Voice Grade Port (Centrex/differ SWC /EBS-M5216)2, 3			UEP9D	UEPQ6	1.13	108.36	70.71	54.47	11.94		15.69				
	2-Wire Voice Grade Port (Centrex/differ SWC /EBS-M5316)2, 3			UEP9D	UEPQ7	1.13	108.36	70.71	54.47	11.94		15.69				
	2-Wire Voice Grade Port, Diff Serving Wire Center - 800 Service Term			UEP9D	UEPQZ	1.13	108.36	70.71	54.47	11.94		15.69				
	2-Wire Voice Grade Port terminated in on Megalink or equivalent			UEP9D	UEPQ9	1.13	40.30	19.90	24.98	6.65		15.69				
	2-Wire Voice Grade Port Terminated on 800 Service Term			UEP9D	UEPQ2	1.13	40.30	19.90	24.98	6.65		15.69				
Local Switching																
	Centrex Intercom Funtionality, per port			UEP9D	URECS	0.7996						15.69				
Local Number Portability																
	Local Number Portability (1 per port)			UEP9D	LNPCC	0.35										
Features																
	All Standard Features Offered, per port			UEP9D	UEPVF	3.04						15.69				
	All Select Features Offered, per port			UEP9D	UEPVS	0.00	406.42					15.69				
	All Centrex Control Features Offered, per port			UEP9D	UEPVC	3.04						15.69				

UNBUNDLED NETWORK ELEMENTS - South Carolina														Attachment: 2		Exhibit: B	
CATEGORY		RATE ELEMENTS	Interim	Zone	BCS	USOC	RATES($)					Svc Order Submitted Elec per LSR	Svc Order Submitted Manually per LSR	Incremental Charge - Manual Svc Order vs. Electronic-1st	Incremental Charge - Manual Svc Order vs. Electronic-Add'l	Incremental Charge - Manual Svc Order vs. Electronic-Disc 1st	Incremental Charge - Manual Svc Order vs. Electronic-Disc Add'l
							Rec	Nonrecurring		Nonrecurring Disconnect		OSS Rates($)					
								First	Add'l	First	Add'l	SOMEC	SOMAN	SOMAN	SOMAN	SOMAN	SOMAN
													15.69				
	NARS																
		Unbundled Network Access Register - Combination			UEP9D	UARCX	0.00	0.00	0.00				15.69				
		Unbundled Network Access Register - Inward			UEP9D	UAR1X	0.00	0.00	0.00				15.69				
		Unbundled Network Access Register - Outdial			UEP9D	UAROX	0.00	0.00	0.00				15.69				
	Miscellaneous Terminations																
	2-Wire Trunk Side																
		Trunk Side Terminations, each			UEP9D	CEND6	8.86	119.57	18.78	60.03	3.77		15.69				
	4-Wire Digital (1.544 Megabits)																
		DS1 Circuit Terminations, each			UEP9D	M1HD1	73.62	202.47	95.90	72.75	2.47		15.69				
		DS0 Channels Activiated per Channel			UEP9D	M1HDO	0.00	14.51					15.69				
	Interoffice Channel Mileage - 2-Wire																
		Interoffice Channel Facilities Termination			UEP9D	MIGBC	24.30	40.63	27.47	16.77	6.91		15.69				
		Interoffice Channel mileage, per mile or fraction of mile			UEP9D	MIGBM	0.0167										
	Feature Activations (DS0) Centrex Loops on Channelized DS1 Service																
	D4 Channel Bank Feature Activations																
		Feature Activation on D-4 Channel Bank Centrex Loop Slot			UEP9D	1PQWS	0.56						15.69				
		Feature Activation on D-4 Channel Bank FX line Side Loop Slot			UEP9D	1PQW6	0.56						15.69				
		Feature Activation on D-4 Channel Bank FX Trunk Side Loop Slot			UEP9D	1PQW7	0.56						15.69				
		Feature Activation on D-4 Channel Bank Centrex Loop Slot - Different Wire Center			UEP9D	1PQWP	0.56						15.69				
		Feature Activation on D-4 Channel Bank Private Line Loop Slot			UEP9D	1PQWV	0.56						15.69				
		Feature Activation on D-4 Channel Bank Tjie Line/Trunk Loop Slot			UEP9D	1PQWQ	0.56						15.69				
		Feature Activation on D-4 Channel Bank WATS Loop Slot			UEP9D	1PQWA	0.56						15.69				
	Non-Recurring Charges (NRC) Associated with UNE-P Centrex																
		NRC Conversion Currently Combined Switch-As-Is with allowed changes, per port			UEP9D	USAC2		37.93	16.72				15.69				
		New Centrex Standard Common Block			UEP9D	M1ACS	0.00	668.70					15.69				
		New Centrex Customized Common Block			UEP9D	M1ACC	0.00	668.70					15.69				
		NAR Establishment Charge, Per Occasion			UEP9D	URECA	0.00	72.89					15.69				
	Note 1 - Required Port for Centrex Control in 1AESS, 5ESS & EWSD																
	Note 2 - Requres Interoffice Channel Mileage																
	Note 3 - Requires Specific Customer Premises Equipment																
	NOTE: Rates displaying an "R" in Interim column are interim and subject to rate true-up as set forth in General Terms and Conditions.																

CATEGORY	RATE ELEMENTS	Interim	Zone	BCS	USOC	RATES($) Rec	Nonrecurring First	Nonrecurring Add'l	Nonrecurring Disconnect First	Nonrecurring Disconnect Add'l	Svc Order Submitted Elec per LSR	Svc Order Submitted Manually per LSR	Incremental Charge - Manual Svc Order vs. Electronic-1st	Incremental Charge - Manual Svc Order vs. Electronic-Add'l	Incremental Charge - Manual Svc Order vs. Electronic-Disc 1st	Incremental Charge - Manual Svc Order vs. Electronic-Disc Add'l
											OSS Rates($)					
											SOMEC	SOMAN	SOMAN	SOMAN	SOMAN	SOMAN
OPERATIONAL SUPPORT SYSTEMS																
	NOTE: (1) Electronic Service Order: CLEC should contact its contract negotiator if it prefers the state specific electronic service ordering charges as ordered by the State Commissions. The electronic service ordering charge currently contained in this rate exhibit is the BellSouth regional electronic service ordering charge. CLEC may elect either the state specific Commission ordered rates for the electronic service ordering charges, or CLEC may elect the regional electronic service ordering charge.															
	NOTE: (2) Any element that can be ordered electronically will be billed according to the SOMEC rate listed in this category. Please refer to BellSouth's Business Rules for Local Ordering (BBR-LO) to determine if a product can be ordered electronically. For those elements that cannot be ordered electronically at present per the BBR-LO, the listed SOMEC rate in this category reflects the charge that would be billed to a CLEC once electronic ordering capabilities come on-line for that element. Otherwise, the manual ordering charge, SOMAN, will be applied to a CLECs bill when it submits an LSR to BellSouth.															
	Electronic OSS Charge, per LSR, submitted via BST's OSS interactive interfaces (Regional)				SOMEC		3.50									
UNBUNDLED EXCHANGE ACCESS LOOP																
2-WIRE ANALOG VOICE GRADE LOOP																
	2-Wire Analog Voice Grade Loop - Service Level 1- Zone 1		1	UEANL	UEAL2	13.19	31.99	20.02	10.65	1.41			20.35	10.54	13.32	13.32
	2-Wire Analog Voice Grade Loop - Service Level 1- Zone 2		2	UEANL	UEAL2	17.23	31.99	20.02	10.65	1.41			20.35	10.54	13.32	13.32
	2-Wire Analog Voice Grade Loop - Service Level 1- Zone 3		3	UEANL	UEAL2	22.53	31.99	20.02	10.65	1.41			20.35	10.54	13.32	13.32
	Loop Testing - Basic 1st Half Hour			UEANL	URET1		78.92	78.92					20.35	10.54	13.32	13.32
	Loop Testing - Basic Additional Half Hour			UEANL	URETA		23.33	23.33					20.35	10.54	13.32	13.32
	CLEC to CLEC Conversion Charge Without Outside Dispatch (UVL-SL1)			UEANL	UREWO		15.80	8.95					20.35	10.54	13.32	13.32
	Engineering Information Document (EI)			UEANL			28.80	28.80								
	Manual Order Coordination for UVL-SL1s (per loop)			UEANL	UEAMC		36.52	36.52								
	Order Coordination for Specified Conversion Time for UVL-SL1 (per LSR)			UEANL	OCOSL		34.29	34.29								
2-WIRE Unbundled COPPER LOOP																
	2-Wire Unbundled Copper Loop - Non-Designed Zone 1	I	1	UEQ	UEQ2X	13.19	31.99	20.02	10.65	1.41			20.35	10.54	13.32	13.32
	2 Wire Unbundled Copper Loop - Non-Designed - Zone 2	I	2	UEQ	UEQ2X	17.23	31.99	20.02	10.65	1.41			20.35	10.54	13.32	13.32
	2 Wire Unbundled Copper Loop - Non-Designed - Zone 3	I	3	UEQ	UEQ2X	22.53	31.99	20.02	10.65	1.41			20.35	10.54	13.32	13.32
	Order Coordination 2 Wire Unbundled Copper Loop - Non-Designed (per loop)			UEQ	USBMC		36.52	36.52					20.35	10.54	13.32	13.32
	Engineering Information Document			UEQ			28.80	28.80					20.35	10.54	13.32	13.32
	Loop Testing - Basic 1st Half Hour			UEQ	URET1		78.92	78.92					20.35	10.54	13.32	13.32
	Loop Testing - Basic Additional Half Hour			UEQ	URETA		23.33	23.33					20.35	10.54	13.32	13.32
	CLEC to CLEC Conversion Charge Without Outside Dispatch (UCL-ND)			UEQ	UREWO		14.29	7.44					20.35	10.54	13.32	13.32
UNBUNDLED EXCHANGE ACCESS LOOP																
2-WIRE ANALOG VOICE GRADE LOOP																
	2 Wire Analog Voice Grade Loop-Service Level 1-Line Splitting-Zone 1		1	UEPSR UEPSB	UEALS	13.19	31.99	20.02	10.65	1.41			20.35	10.54	13.32	13.32
	2 Wire Analog Voice Grade Loop-Service Level 1-Line Splitting-Zone 1		1	UEPSR UEPSB	UEABS	13.19	31.99	20.02	10.65	1.41			20.35	10.54	13.32	13.32
	2 Wire Analog Voice Grade Loop- Service Level 1-Line Splitting-Zone 2		2	UEPSR UEPSB	UEALS	17.23	31.99	20.02	10.65	1.41			20.35	10.54	13.32	13.32
	2 Wire Analog Voice Grade Loop- Service Level 1-Line Splitting-Zone 2		2	UEPSR UEPSB	UEABS	17.23	31.99	20.02	10.65	1.41			20.35	10.54	13.32	13.32
	2 Wire Analog Voice Grade Loop-Service Level 1-Line Splitting-Zone 3		3	UEPSR UEPSB	UEALS	22.53	31.99	20.02	10.65	1.41			20.35	10.54	13.32	13.32
	2 Wire Analog Voice Grade Loop-Service Level 1-Line Splitting-Zone 3		3	UEPSR UEPSB	UEABS	22.53	31.99	20.02	10.65	1.41			20.35	10.54	13.32	13.32
UNBUNDLED EXCHANGE ACCESS LOOP																
2-WIRE ANALOG VOICE GRADE LOOP																
	2-Wire Analog Voice Grade Loop - Service Level 2 w/Loop or Ground Start Signaling - Zone 1		1	UEA	UEAL2	16.56	75.06	48.20	28.70	17.64			20.35	10.54	13.32	13.32
	2-Wire Analog Voice Grade Loop - Service Level 2 w/Loop or Ground Start Signaling - Zone 2		2	UEA	UEAL2	21.63	75.06	48.20	28.70	17.64			20.35	10.54	13.32	13.32
	2-Wire Analog Voice Grade Loop - Service Level 2 w/Loop or Ground Start Signaling - Zone 3		3	UEA	UEAL2	28.28	75.06	48.20	28.70	17.64			20.35	10.54	13.32	13.32
	Order Coordination for Specified Conversion Time (per LSR)			UEA	OCOSL		34.29									
	2-Wire Analog Voice Grade Loop - Service Level 2 w/Reverse Battery Signaling - Zone 1		1	UEA	UEAR2	16.56	75.06	48.20	28.70	17.64			20.35	10.54	13.32	13.32

CATEGORY	RATE ELEMENTS	Interim	Zone	BCS	USOC	RATES($)					Svc Order Submitted Elec per LSR	Svc Order Submitted Manually per LSR	Incremental Charge - Manual Svc Order vs. Electronic-1st	Incremental Charge - Manual Svc Order vs. Electronic-Add'l	Incremental Charge - Manual Svc Order vs. Electronic-Disc 1st	Incremental Charge - Manual Svc Order vs. Electronic-Disc Add'l
						Rec	Nonrecurring		Nonrecurring Disconnect		OSS Rates($)					
							First	Add'l	First	Add'l	SOMEC	SOMAN	SOMAN	SOMAN	SOMAN	SOMAN
	2-Wire Analog Voice Grade Loop - Service Level 2 w/Reverse Battery Signaling - Zone 2		2	UEA	UEAR2	21.63	75.06	48.20	28.70	17.64			20.35	10.54	13.32	13.32
	2-Wire Analog Voice Grade Loop - Service Level 2 w/Reverse Battery Signaling - Zone 3		3	UEA	UEAR2	28.28	75.06	48.20	28.70	17.64			20.35	10.54	13.32	13.32
	Order Coordination for Specified Conversion Time (per LSR)			UEA	OCOSL		34.29									
	CLEC to CLEC Conversion Charge without outside dispatch			UEA	UREWO		75.06	36.41					20.35	10.54	13.32	13.32
4-WIRE ANALOG VOICE GRADE LOOP																
	4-Wire Analog Voice Grade Loop - Zone 1		1	UEA	UEAL4	24.70	122.76	85.57	76.35	39.16			20.35	10.54	13.32	13.32
	4-Wire Analog Voice Grade Loop - Zone 2		2	UEA	UEAL4	32.25	122.76	85.57	76.35	39.16			20.35	10.54	13.32	13.32
	4-Wire Analog Voice Grade Loop - Zone 3		3	UEA	UEAL4	42.17	122.76	85.57	76.35	39.16			20.35	10.54	13.32	13.32
	Order Coordination for Specified Conversion Time (per LSR)			UEA	OCOSL		34.29									
	CLEC to CLEC Conversion Charge without outside dispatch			UEA	UREWO		75.06	36.41					20.35	10.54	13.32	13.32
2-WIRE ISDN DIGITAL GRADE LOOP																
	2-Wire ISDN Digital Grade Loop - Zone 1		1	UDN	U1L2X	22.22	142.76	88.88	76.35	39.16			20.35	10.54	13.32	13.32
	2-Wire ISDN Digital Grade Loop - Zone 2		2	UDN	U1L2X	29.02	142.76	88.88	76.35	39.16			20.35	10.54	13.32	13.32
	2-Wire ISDN Digital Grade Loop - Zone 3		3	UDN	U1L2X	37.95	142.76	88.88	76.35	39.16			20.35	10.54	13.32	13.32
	Order Coordination For Specified Conversion Time (per LSR)			UDN	OCOSL		34.29									
	CLEC to CLEC Conversion Charge without outside dispatch			UDN	UREWO		91.77	44.22					20.35	10.54	13.32	13.32
2-WIRE Universal Digital Channel (UDC) COMPATIBLE LOOP																
	2-Wire Universal Digital Channel (UDC) Compatible Loop - Zone 1		1	UDC	UDC2X	22.22	142.76	88.88	76.35	39.16			20.35	10.54	13.32	13.32
	2-Wire Universal Digital Channel (UDC) Compatible Loop - Zone 2		2	UDC	UDC2X	29.02	142.76	88.88	76.35	39.16			20.35	10.54	13.32	13.32
	2-Wire Universal Digital Channel (UDC) Compatible Loop - Zone 3		3	UDC	UDC2X	37.95	142.76	88.88	76.35	39.16			20.35	10.54	13.32	13.32
	CLEC to CLEC Conversion Charge without outside dispatch			UDC	UREWO		91.77	44.22					20.35	10.54	13.32	13.32
2-WIRE ASYMMETRICAL DIGITAL SUBSCRIBER LINE (ADSL) COMPATIBLE LOOP																
	2 Wire Unbundled ADSL Loop including manual service inquiry & facility reservation - Zone 1		1	UAL	UAL2X	13.82	270.01	234.63	74.54	39.14			20.35	10.54	13.32	13.32
	2 Wire Unbundled ADSL Loop including manual service inquiry & facility reservation - Zone 2		2	UAL	UAL2X	18.05	270.01	234.63	74.54	39.14			20.35	10.54	13.32	13.32
	2 Wire Unbundled ADSL Loop including manual service inquiry & facility reservation - Zone 3		3	UAL	UAL2X	23.60	270.01	234.63	74.54	39.14			20.35	10.54	13.32	13.32
	Order Coordination for Specified Conversion Time (per LSR)			UAL	OCOSL		34.29									
	2 Wire Unbundled ADSL Loop without manual service inquiry & facility reservaton - Zone 1	I	1	UAL	UAL2W	13.82	31.99	20.02	10.65	1.41			20.35	10.54	13.32	13.32
	2 Wire Unbundled ADSL Loop without manual service inquiry & facility reservaton - Zone 2	I	2	UAL	UAL2W	18.05	31.99	20.02	10.65	1.41			20.35	10.54	13.32	13.32
	2 Wire Unbundled ADSL Loop without manual service inquiry & facility reservaton - Zone 3	I	3	UAL	UAL2W	23.60	31.99	20.02	10.65	1.41			20.35	10.54	13.32	13.32
	2 Wire Unbundled ADSL Loop without manual service inquiry & facility reservaton - Zone 4		4	UAL	UAL2W											
	Order Coordination for Specified Conversion Time (per LSR)			UAL	OCOSL		34.29									
	CLEC to CLEC Conversion Charge without outside dispatch	I		UAL	UREWO		31.99	20.02					20.35	10.54	13.32	13.32
2-WIRE HIGH BIT RATE DIGITAL SUBSCRIBER LINE (HDSL) COMPATIBLE LOOP																
	2 Wire Unbundled HDSL Loop including manual service inquiry & facility reservation - Zone 1		1	UHL	UHL2X	10.83	270.01	234.63	74.54	39.14			20.35	10.54	13.32	13.32
	2 Wire Unbundled HDSL Loop including manual service inquiry & facility reservation - Zone 2		2	UHL	UHL2X	14.15	270.01	234.63	74.54	39.14			20.35	10.54	13.32	13.32
	2 Wire Unbundled HDSL Loop including manual service inquiry & facility reservation - Zone 3		3	UHL	UHL2X	18.50	270.01	234.63	74.54	39.14			20.35	10.54	13.32	13.32
	Order Coordination for Specified Conversion Time (per LSR)			UHL	OCOSL		34.29									
	2 Wire Unbundled HDSL Loop without manual service inquiry and facility reservation - Zone 1	I	1	UHL	UHL2W	10.83	31.99	20.02	10.65	1.41			20.35	10.54	13.32	13.32
	2 Wire Unbundled HDSL Loop without manual service inquiry and facility reservation - Zone 2	I	2	UHL	UHL2W	14.15	31.99	20.02	10.65	1.41			20.35	10.54	13.32	13.32
	2 Wire Unbundled HDSL Loop without manual service inquiry and facility reservation - Zone 3	I	3	UHL	UHL2W	18.50	31.99	20.02	10.65	1.41			20.35	10.54	13.32	13.32
	Order Coordination for Specified Conversion Time (per LSR)			UHL	OCOSL		34.29									

CATEGORY	RATE ELEMENTS	Interim	Zone	BCS	USOC	RATES($) Rec	Nonrecurring First	Nonrecurring Add'l	Nonrecurring Disconnect First	Nonrecurring Disconnect Add'l	Svc Order Submitted Elec per LSR	Svc Order Submitted Manually per LSR	Incremental Charge - Manual Svc Order vs. Electronic-1st	Incremental Charge - Manual Svc Order vs. Electronic-Add'l	Incremental Charge - Manual Svc Order vs. Electronic-Disc 1st	Incremental Charge - Manual Svc Order vs. Electronic-Disc Add'l
											OSS Rates($)					
											SOMEC	SOMAN	SOMAN	SOMAN	SOMAN	SOMAN
	CLEC to CLEC Conversion Charge without outside dispatch	I		UHL	UREWO		31.99	20.02					20.35	10.54	13.32	13.32
	4-WIRE HIGH BIT RATE DIGITAL SUBSCRIBER LINE (HDSL) COMPATIBLE LOOP															
	4 Wire Unbundled HDSL Loop including manual service inquiry and facility reservation - Zone 1		1	UHL	UHL4X	13.93	279.60	244.22	74.54	39.14			20.35	10.54	13.32	13.32
	4-Wire Unbundled HDSL Loop including manual service inquiry and facility reservation - Zone 2		2	UHL	UHL4X	18.20	279.60	244.22	74.54	39.14			20.35	10.54	13.32	13.32
	4-Wire Unbundled HDSL Loop including manual service inquiry and facility reservation - Zone 3		3	UHL	UHL4X	23.80	279.60	244.22	74.54	39.14			20.35	10.54	13.32	13.32
	Order Coordination for Specified Conversion Time (per LSR)			UHL	OCOSL		34.29									
	4-Wire Unbundled HDSL Loop without manual service inquiry and facility reservation - Zone 1	I	1	UHL	UHL4W	13.93	31.99	20.02	10.65	1.41			20.35	10.54	13.32	13.32
	4-Wire Unbundled HDSL Loop without manual service inquiry and facility reservation - Zone 2	I	2	UHL	UHL4W	18.20	31.99	20.02	10.65	1.41			20.35	10.54	13.32	13.32
	4-Wire Unbundled HDSL Loop without manual service inquiry and facility reservation - Zone 3	I	3	UHL	UHL4W	23.80	31.99	20.02	10.65	1.41			20.35	10.54	13.32	13.32
	Order Coordination for Specified Conversion Time (per LSR)			UHL	OCOSL		34.29									
	CLEC to CLEC Conversion Charge without outside dispatch	I		UHL	UREWO		31.99	20.02					20.35	10.54	13.32	13.32
	4-WIRE DS1 DIGITAL LOOP															
	4-Wire DS1 Digital Loop - Zone 1		1	USL	USLXX	57.73	313.08	219.72	96.86	40.45			18.98	8.43	11.95	11.95
	4-Wire DS1 Digital Loop - Zone 2		2	USL	USLXX	75.40	313.08	219.72	96.86	40.45			18.98	8.43	11.95	11.95
	4-Wire DS1 Digital Loop - Zone 3		3	USL	USLXX	98.59	313.08	219.72	96.86	40.45			18.98	8.43	11.95	11.95
	Order Coordination for Specified Conversion Time (per LSR)			USL	OCOSL		34.59									
	CLEC to CLEC Conversion Charge without outside dispatch			USL	UREWO		130.47	40.11					20.35	10.54	13.32	13.32
	4-WIRE 19.2, 56 OR 64 KBPS DIGITAL GRADE LOOP															
	4 Wire Unbundled Digital 19.2 Kbps		1	UDL	UDL19	31.10	207.01	141.38	90.70	44.18			20.35	10.54	13.32	13.32
	4 Wire Unbundled Digital 19.2 Kbps		2	UDL	UDL19	40.61	207.01	141.38	90.70	44.18			20.35	10.54	13.32	13.32
	4 Wire Unbundled Digital 19.2 Kbps		3	UDL	UDL19	53.11	207.01	141.38	90.70	44.18			20.35	10.54	13.32	13.32
	4 Wire Unbundled Digital Loop 56 Kbps - Zone 1		1	UDL	UDL56	31.10	207.01	141.38	90.70	44.18			20.35	10.54	13.32	13.32
	4 Wire Unbundled Digital Loop 56 Kbps - Zone 2		2	UDL	UDL56	40.61	207.01	141.38	90.70	44.18			20.35	10.54	13.32	13.32
	4 Wire Unbundled Digital Loop 56 Kbps - Zone 3		3	UDL	UDL56	53.11	207.01	141.38	90.70	44.18			20.35	10.54	13.32	13.32
	Order Coordination for Specified Conversion Time (per LSR)			UDL	OCOSL		34.29									
	4 Wire Unbundled Digital Loop 64 Kbps - Zone 1		1	UDL	UDL64	31.10	207.01	141.38	90.70	44.18			20.35	10.54	13.32	13.32
	4 Wire Unbundled Digital Loop 64 Kbps - Zone 2		2	UDL	UDL64	40.61	207.01	141.38	90.70	44.18			20.35	10.54	13.32	13.32
	4 Wire Unbundled Digital Loop 64 Kbps - Zone 3		3	UDL	UDL64	53.11	207.01	141.38	90.70	44.18			20.35	10.54	13.32	13.32
	Order Coordination for Specified Conversion Time (per LSR)			UDL	OCOSL		34.29									
	CLEC to CLEC Conversion Charge without outside dispatch			UDL	UREWO		102.28	49.82					20.35	10.54	13.32	13.32
	2-WIRE Unbundled COPPER LOOP															
	2-Wire Unbundled Copper Loop/Short including manual service inquiry & facility reservation - Zone 1	I	1	UCL	UCLPB	13.19	31.99	20.02	10.65	1.41			20.35	10.54	13.32	13.32
	2-Wire Unbundled Copper Loop/Short including manual service inquiry & facility reservation - Zone 2	I	2	UCL	UCLPB	17.23	31.99	20.02	10.65	1.41			20.35	10.54	13.32	13.32
	2 Wire Unbundled Copper Loop/Short including manual service inquiry & facility reservation - Zone 3	I	3	UCL	UCLPB	22.53	31.99	20.02	10.65	1.41			20.35	10.54	13.32	13.32
	Order Coordination for Unbundled Copper Loops (per loop)			UCL	UCLMC		36.52	36.52								
	2-Wire Unbundled Copper Loop/Short without manual service inquiry and facility reservation - Zone 1	I	1	UCL	UCLPW	13.19	31.99	20.02	10.65	1.41			20.35	10.54	13.32	13.32
	2-Wire Unbundled Copper Loop/Short without manual service inquiry and facility reservation - Zone 2	I	2	UCL	UCLPW	17.23	31.99	20.02	10.65	1.41			20.35	10.54	13.32	13.32
	2-Wire Unbundled Copper Loop/Short without manual service inquiry and facility reservation - Zone 3	I	3	UCL	UCLPW	22.53	31.99	20.02	10.65	1.41			20.35	10.54	13.32	13.32
	Order Coordination for Unbundled Copper Loops (per loop)			UCL	UCLMC		36.52	36.52								
	2-Wire Unbundled Copper Loop/Long - includes manual srvc. inquiry and facility reservation - Zone 1	I	1	UCL	UCL2L	13.19	31.99	20.02	10.65	1.41			20.35	10.54	13.32	13.32
	2-Wire Unbundled Copper Loop/Long - includes manual svc. inquiry and facility reservation - Zone 2	I	2	UCL	UCL2L	17.23	31.99	20.02	10.65	1.41			20.35	10.54	13.32	13.32
	2-Wire Unbundled Copper Loop/Long - includes manual svc. inquiry and facility reservation - Zone 3	I	3	UCL	UCL2L	22.53	31.99	20.02	10.65	1.41			20.35	10.54	13.32	13.32
	Order Coordination for Unbundled Copper Loops (per loop)			UCL	UCLMC		36.52	36.52								

UNBUNDLED NETWORK ELEMENTS - Tennessee														Attachment: 2		Exhibit: B	
CATEGORY		RATE ELEMENTS	Interim	Zone	BCS	USOC	RATES($)					Svc Order Submitted Elec per LSR	Svc Order Submitted Manually per LSR	Incremental Charge - Manual Svc Order vs. Electronic-1st	Incremental Charge - Manual Svc Order vs. Electronic-Add'l	Incremental Charge - Manual Svc Order vs. Electronic-Disc 1st	Incremental Charge - Manual Svc Order vs. Electronic-Disc Add'l
							Rec	Nonrecurring		Nonrecurring Disconnect		OSS Rates($)					
								First	Add'l	First	Add'l	SOMEC	SOMAN	SOMAN	SOMAN	SOMAN	SOMAN
		2-Wire Unbundled Copper Loop/Long - without manual service inquiry and facility reservation - Zone 1	I	1	UCL	UCL2W	13.19	31.99	20.02	10.65	1.41			20.35	10.54	13.32	13.32
		2-Wire Unbundled Copper Loop/Long - without manual service inquiry and facility reservation - Zone 2	I	2	UCL	UCL2W	17.23	31.99	20.02	10.65	1.41			20.35	10.54	13.32	13.32
		Order Coordination for Unbundled Copper Loops (per loop)			UCL	UCLMC		36.52	36.52								
		CLEC to CLEC Conversion Charge without outside dispatch (UCL-Des)	I		UCL	UREWO		31.99	20.02					20.35	10.54	13.32	13.32
	4-WIRE COPPER LOOP																
		4-Wire Copper Loop/Short - including manual service inquiry and facility reservation - Zone 1	I	1	UCL	UCL4S	24.70	122.76	85.57	76.35	39.16			20.35	10.54	13.32	13.32
		4-Wire Copper Loop/Short - including manual service inquiry and facility reservation - Zone 2	I	2	UCL	UCL4S	32.25	122.76	85.57	76.35	39.16			20.35	10.54	13.32	13.32
		4-Wire Copper Loop/Short - including manual service inquiry and facility reservation - Zone 3	I	3	UCL	UCL4S	42.17	122.76	85.57	76.35	39.16			20.35	10.54	13.32	13.32
		Order Coordination for Unbundled Copper Loops (per loop)			UCL	UCLMC		36.52	36.52								
		4-Wire Copper Loop/Short - without manual service inquiry and facility reservation - Zone 1	I	1	UCL	UCL4W	24.70	122.76	85.57	76.35	39.16			20.35	10.54	13.32	13.32
		4-Wire Copper Loop/Short - without manual service inquiry and facility reservation - Zone 2	I	2	UCL	UCL4W	32.25	122.76	85.57	76.35	39.16			20.35	10.54	13.32	13.32
		4-Wire Copper Loop/Short - without manual service inquiry and facility reservation - Zone 3	I	3	UCL	UCL4W	42.17	122.76	85.57	76.35	39.16			20.35	10.54	13.32	13.32
		Order Coordination for Unbundled Copper Loops (per loop)			UCL	UCLMC		36.52	36.52								
		4-Wire Unbundled Copper Loop/Long - includes manual svc. inquiry and facility reservation - Zone 1	I	1	UCL	UCL4L	24.70	122.76	85.57	76.35	39.16			20.35	10.54	13.32	13.32
		4-Wire Unbundled Copper Loop/Long - includes manual svc. inquiry and facility reservation - Zone 2	I	2	UCL	UCL4L	32.25	122.76	85.57	76.35	39.16			20.35	10.54	13.32	13.32
		4-Wire Unbundled Copper Loop/Long - includes manual svc. inquiry and facility reservation - Zone 3	I	3	UCL	UCL4L	42.17	122.76	85.57	76.35	39.16			20.35	10.54	13.32	13.32
		Order Coordination for Unbundled Copper Loops (per loop)			UCL	UCLMC		36.52	36.52								
		4-Wire Unbundled Copper Loop/Long - without manual svc. inquiry and facility reservation - Statewide	I	sw	UCL	UCL4O											
		Order Coordination for Unbundled Copper Loops (per loop)			UCL	UCLMC		36.52	36.52								
		CLEC to CLEC Conversion Charge without outside dispatch (UCL-Des)	I		UCL	UREWO		31.99	20.02					20.35	10.54	13.32	13.32
LOOP MODIFICATION																	
		Unbundled Loop Modification, Removal of Load Coils - 2 Wire pair less than or equal to 18k ft	I		UAL, UHL, UCL, UEQ, ULS, UEA, UEANL, UDL, UDC, UDN, UDL, USL	ULM2L		65.40	65.40					20.35	10.54	13.32	13.32
		Unbundled Loop Modification, Removal of Load Coils - 2 wire greater than 18k ft	I		UCL, ULS	ULM2G		710.71	23.77					20.35	10.54	13.32	13.32
		Unbundled Loop Modification Removal of Load Coils - 4 Wire less than or equal to 18K ft	I		UHL, UCL	ULM4L		65.40	65.40					20.35	10.54	13.32	13.32
		Unbundled Loop Modification Removal of Load Coils - 4 Wire pair greater than 18k ft	I		UCL	ULM4G		710.71	23.77					20.35	10.54	13.32	13.32
		Unbundled Loop Modification Removal of Bridged Tap Removal, per unbundled loop	I		UAL, UHL, UCL, UEQ, UEF, ULS, UEA, UEANL, UDL, UDC, UDN, UDL, USL	ULMBT		65.44	65.44					20.35	10.54	13.32	13.32
SUB-LOOPS																	
	Sub-Loop Distribution																
		Sub-Loop - Per Cross Box Location - CLEC Feeder Facility Set-Up	I		UEANL	USBSA		517.25	517.25					20.35	10.54	13.32	13.32
		Sub-Loop - Per Cross Box Location - Per 25 Pair Panel Set-Up	I		UEANL	USBSB		42.68	42.68					20.35	10.54	13.32	13.32
		Sub-Loop - Per Building Equipment Room - CLEC Feeder Facility Set-Up	I		UEANL	USBSC		313.01	313.01					20.35	10.54	13.32	13.32

CATEGORY	RATE ELEMENTS	Interim	Zone	BCS	USOC	RATES($) Rec	Nonrecurring First	Nonrecurring Add'l	Nonrecurring Disconnect First	Nonrecurring Disconnect Add'l	Svc Order Submitted Elec per LSR	Svc Order Submitted Manually per LSR	Incremental Charge - Manual Svc Order vs. Electronic-1st	Incremental Charge - Manual Svc Order vs. Electronic-Add'l	Incremental Charge - Manual Svc Order vs. Electronic-Disc 1st	Incremental Charge - Manual Svc Order vs. Electronic-Disc Add'l
											OSS Rates($)					
							First	Add'l	First	Add'l	SOMEC	SOMAN	SOMAN	SOMAN	SOMAN	SOMAN
	Sub-Loop - Per Building Equipment Room - Per 25 Pair Panel Set-Up	I		UEANL	USBSD		108.06	108.06					20.35	10.54	13.32	13.32
	Sub-Loop Distribution Per 2-Wire Analog Voice Grade Loop - Statewide		sw	UEANL	USBN2	10.02	148.84	112.34	73.14	36.65			20.35	10.54	13.32	13.32
	Order Coordination for Unbundled Sub-Loops, per sub-loop pair			UEANL	USBMC		34.29	34.29								
	Sub-Loop Distribution Per 4-Wire Analog Voice Grade Loop - Zone 1		1	UEANL	USBN4	7.30	147.93	75.11	99.96	16.98			20.35	10.54	13.32	13.32
	Sub-Loop Distribution Per 4-Wire Analog Voice Grade Loop - Zone 2		2	UEANL	USBN4	9.54	147.93	75.11	99.96	16.98			20.35	10.54	13.32	13.32
	Sub-Loop Distribution Per 4-Wire Analog Voice Grade Loop - Zone 3		3	UEANL	USBN4	12.47	147.93	75.11	99.96	16.98			20.35	10.54	13.32	13.32
	Order Coordination for Unbundled Sub-Loops, per sub-loop pair			UEANL	USBMC		34.29	34.29								
	Sub-Loop 2-Wire Intrabuilding Network Cable (INC)	I		UEANL	USBR2	1.35	94.56	29.35					20.35	10.54	13.32	13.32
	Order Coordination for Unbundled Sub-Loops, per sub-loop pair			UEANL	USBMC		34.29	34.29								
	Sub-Loop 4-Wire Intrabuilding Network Cable (INC)	I		UEANL	USBR4	2.26	116.14	37.10					20.35	10.54	13.32	13.32
	Order Coordination for Unbundled Sub-Loops, per sub-loop pair			UEANL	USBMC		34.29	34.29								
	2 Wire Copper Unbundled Sub-Loop Distribution - Zone 1	I	1	UEF	UCS2X	5.16	110.71	37.89	94.41	13.09			20.35	10.54	13.32	13.32
	2 Wire Copper Unbundled Sub-Loop Distribution - Zone 2	I	2	UEF	UCS2X	6.74	110.71	37.89	94.41	13.09			20.35	10.54	13.32	13.32
	2 Wire Copper Unbundled Sub-Loop Distribution - Zone 3	I	3	UEF	UCS2X	8.81	110.71	37.89	94.41	13.09			20.35	10.54	13.32	13.32
	Order Coordination for Unbundled Sub-Loops, per sub-loop pair			UEF	USBMC		34.29	34.29								
	4 Wire Copper Unbundled Sub-Loop Distribution - Zone 1	I	1	UEF	UCS4X	6.52	117.12	44.30	99.96	16.98			20.35	10.54	13.32	13.32
	4 Wire Copper Unbundled Sub-Loop Distribution - Zone 2	I	2	UEF	UCS4X	8.52	117.12	44.30	99.96	16.98			20.35	10.54	13.32	13.32
	4 Wire Copper Unbundled Sub-Loop Distribution - Zone 3	I	3	UEF	UCS4X	11.14	117.12	44.30	99.96	16.98			20.35	10.54	13.32	13.32
	Order Coordination for Unbundled Sub-Loops, per sub-loop pair			UEF	USBMC		34.29	34.29								
	Unbundled Sub-Loop Modification															
	Unbundled Sub-Loop Modification - 2-W Copper Dist Load Coil/Equip Removal per 2-W PR			UEF	ULM2X		335.36	7.82					20.34	10.54	13.32	13.32
	Unbundled Sub-loop Modification - 4-W Copper Dist Load Coil/Equip Removal per 4-W PR			UEF	ULM4X		335.36	7.82					20.35	10.54	13.32	13.32
	Unbundled Sub-loop Modification - 2-w/4-w Copper Dist Bridged Tap Removal, per PR unloaded			UEF	ULM4T		528.48	9.74					20.35	10.54	13.32	13.32
	Unbundled Network Terminating Wire (UNTW)															
	Unbundled Network Terminating Wire (UNTW) per Pair	I		UENTW	UENPP	0.4555	2.48	2.48					20.35	10.54	13.32	13.32
	Network Interface Device (NID)															
	Network Interface Device (NID) - 1-2 lines			UENTW	UND12		89.69	54.56	0.6391	0.6391			20.35	10.54	13.32	13.32
	Network Interface Device (NID) - 1-6 lines			UENTW	UND16		129.65	94.51	0.6522	0.6522			20.35	10.54	13.32	13.32
	Network Interface Device Cross Connect - 2 W			UENTW	UNDC2		11.11	11.11					20.35	10.54	13.32	13.32
	Network Interface Device Cross Connect - 4W			UENTW	UNDC4		11.11	11.11					20.35	10.54	13.32	13.32
SUB-LOOPS																
	Sub-Loop Feeder															
	USL-Feeder, DS0 Set-up per Cross Box location - CLEC Distribution Facility set-up			UEA, UDN,UCL,UDL,UDC	USBFW		517.25						20.35	10.54	13.32	13.32
	USL Feeder - DS0 Set-up per Cross Box location - per 25 pair set-up			UEA, UDN,UCL,UDL,UDC	USBFX		42.68	42.68					20.35	10.54	13.32	13.32
	USL Feeder DS1 Set-up at DSX location, per DS1 termination			USL	USBFZ		531.04	11.34					20.35	10.54	13.32	13.32
	Unbundled Sub-Loop Feeder Loop, 2 Wire Ground-Start, Voice Grade- Statewide		sw	UEA	USBFA	12.05	122.24	85.05	76.35	39.16			20.35	10.54	13.32	13.32
	Order Coordination for Specified Conversion Time, per LSR			UEA	OCOSL		34.29									
	Unbundled Sub-Loop Feeder Loop, 2 Wire Loop-Start, Voice Grade - Statewide		sw	UEA	USBFB	12.05	122.24	85.05	76.35	39.16			20.35	10.54	13.32	13.32
	Order Coordination for Specified Time Conversion, per LSR			UEA	OCOSL		34.29									
	Unbundled Sub-Loop Feeder Loop, 2 Wire Reverse Battery, Voice Grade Loop - Statewide		sw	UEA	USBFC	12.05	122.24	85.05	76.35	39.16			20.35	10.54	13.32	13.32

CATEGORY	RATE ELEMENTS	Interim	Zone	BCS	USOC	RATES($) Rec	Nonrecurring First	Nonrecurring Add'l	Nonrecurring Disconnect First	Nonrecurring Disconnect Add'l	Svc Order Submitted Elec per LSR	Svc Order Submitted Manually per LSR	Incremental Charge - Manual Svc Order vs. Electronic-1st	Incremental Charge - Manual Svc Order vs. Electronic-Add'l	Incremental Charge - Manual Svc Order vs. Electronic-Disc 1st	Incremental Charge - Manual Svc Order vs. Electronic-Disc Add'l
											OSS Rates($)					
											SOMEC	SOMAN	SOMAN	SOMAN	SOMAN	SOMAN
	Order Coordination For Specified Conversion Time, per LSR			UEA	OCOSL		34.29									
	Unbundled Sub-Loop Feeder Loop, 4 Wire Ground-Start, Voice Grade - Zone 1		1	UEA	USBFD	21.52	137.31	61.93	118.04	30.13			20.35	10.54	13.32	13.32
	Unbundled Sub-Loop Feeder Loop, 4 Wire Ground-Start, Voice Grade - Zone 2		2	UEA	USBFD	28.11	137.31	61.93	118.04	30.13			20.35	10.54	13.32	13.32
	Unbundled Sub-Loop Feeder Loop, 4 Wire Ground Start, Voice Grade - Zone 3		3	UEA	USBFD	36.76	137.31	61.93	118.04	30.13			20.35	10.54	13.32	13.32
	Order Coordination For Specified Conversion Time, Per LSR			UEA	OCOSL		34.29									
	Unbundled Sub-Loop Feeder Loop, 4 Wire Loop-Start, Voice Grade - Zone 1		1	UEA	USBFE	21.52	137.31	61.93	118.04	30.13			20.35	10.54	13.32	13.32
	Unbundled Sub-Loop Feeder Loop, 4 Wire Loop-Start, Voice Grade - Zone 2		2	UEA	USBFE	28.11	137.31	61.93	118.04	30.13			20.35	10.54	13.32	13.32
	Unbundled Sub-Loop Feeder Loop, 4 Wire Loop-Start, Voice Grade - Zone 3		3	UEA	USBFE	36.76	137.31	61.93	118.04	30.13			20.35	10.54	13.32	13.32
	Order Coordination For Specified Conversion Time, Per LSR			UEA	OCOSL		34.29									
	Unbundled Sub-Loop Feeder Loop, 2 Wire ISDN BRI - Zone 1		1	UDN	USBFF	16.11	142.83	67.45	104.67	18.53			19.99	19.99	19.99	19.99
	Unbundled Sub-Loop Feeder Loop, 2-Wire ISDN BRI - Zone 2		2	UDN	USBFF	21.04	142.83	67.45	104.67	18.53			19.99	19.99	19.99	19.99
	Unbundled Sub-Loop Feeder Loop, 2-Wire ISDN BRI - Zone 3		3	UDN	USBFF	27.51	142.83	67.45	104.64	18.53			19.99	19.99	19.99	19.99
	Order Coordination For Specified Conversion Time, Per LSR			UDN	OCOSL		34.29									
	Unbundled Sub-Loop Feeder, 2 Wire UDC (IDSL compatible)		1	UDC	USBFS	16.11	142.83	67.45	104.67	18.53			19.99	19.99	19.99	19.99
	Unbundled Sub-Loop Feeder, 2 Wire UDC (IDSL compatible)		2	UDC	USBFS	21.04	142.83	67.45	104.67	18.53			19.99	19.99	19.99	19.99
	Unbundled Sub-Loop Feeder, 2 Wire UDC (IDSL compatible)		3	UDC	USBFS	27.51	142.83	67.45	104.64	18.53			19.99	19.99	19.99	19.99
	Unbundled Sub-Loop Feeder Loop, 4-Wire DS1 - Zone 1		1	USL	USBFG	39.74	116.00	40.62	106.82	18.91			19.99	19.99	19.99	19.99
	Unbundled Sub-Loop Feeder Loop, 4-Wire DS1 - Zone 2		2	USL	USBFG	51.90	116.00	40.62	106.82	18.91			19.99	19.99	19.99	19.99
	Unbundled Sub-Loop Feeder Loop, 4-Wire DS1 - Zone 3		3	USL	USBFG	67.86	116.00	40.62	106.82	18.91			19.99	19.99	19.99	19.99
	Order Coordination For Specified Conversion Time, Per LSR			USL	OCOSL		34.59									
	Unbundled Sub-Loop Feeder, 2-Wire Copper Loop - Zone 1		1	UCL	USBFH	9.52	114.27	38.89	104.64	18.53			19.99	19.99	19.99	19.99
	Unbundled Sub-Loop Feeder Loop, 2-Wire Copper Loop - Zone 2		2	UCL	USBFH	12.43	114.27	38.89	104.64	18.53			19.99	19.99	19.99	19.99
	Unbundled Sub-Loop Feeder Loop, 2-Wire Copper Loop - Zone 3		3	UCL	USBFH	16.26	114.27	38.89	104.64	18.53			19.99	19.99	19.99	19.99
	Order Coordination For Specified Conversion Time, per LSR			UCL	OCOSL		34.29									
	Sub-Loop Feeder - Per 4-Wire Copper Loop - Zone 1		1	UCL	USBFJ	14.37	123.41	48.03	110.44	22.53			19.99	19.99	19.99	19.99
	Sub-Loop Feeder - Per 4-Wire Copper Loop - Zone 2		2	UCL	USBFJ	18.76	123.41	48.03	110.44	22.53			19.99	19.99	19.99	19.99
	Sub-Loop Feeder - Per 4-Wire Copper Loop - Zone 3		3	UCL	USBFJ	24.53	123.41	48.03	110.44	22.53			19.99	19.99	19.99	19.99
	Order Coordination For Specified Conversion Time, per LSR			UCL	OCOSL		34.29									
	Sub-Loop Feeder - Per 4-Wire 19.2 Kbps Digital Grade Loop		1	UDL	USBFN	26.06	116.00	40.62	106.82	18.91			19.99	19.99	19.99	19.99
	Sub-Loop Feeder - Per 4-Wire 19.2 Kbps Digital Grade Loop		2	UDL	USBFN	34.03	116.00	40.62	106.82	18.91			19.99	19.99	19.99	19.99
	Sub-Loop Feeder - Per 4-Wire 19.2 Kbps Digital Grade Loop		3	UDL	USBFN	44.50	116.00	40.62	106.82	18.91			19.99	19.99	19.99	19.99
	Sub-Loop Feeder - Per 4-Wire 56 Kbps Digital Grade Loop - Zone 1		1	UDL	USBFO	26.06	116.00	40.62	106.82	18.91			19.99	19.99	19.99	19.99
	Sub-Loop Feeder - Per 4-Wire 56 Kbps Digital Grade Loop - Zone 2		2	UDL	USBFO	34.03	116.00	40.62	106.82	18.91			19.99	19.99	19.99	19.99
	Sub-Loop Feeder - Per 4-Wire 56 Kbps Digital Grade Loop - Zone 3		3	UDL	USBFO	44.50	116.00	40.62	106.82	18.91			19.99	19.99	19.99	19.99
	Order Coordination For Specified Time Conversion, per LSR			UDL	OCOSL		34.29									
	Sub-Loop Feeder - Per 4-Wire 64 Kbps Digital Grade Loop - Zone 1		1	UDL	USBFP	26.06	116.00	40.62	106.82	18.91			19.99	19.99	19.99	19.99
	Sub-Loop Feeder - Per 4-Wire 64 Kbps Digital Grade Loop - Zone 2		2	UDL	USBFP	34.03	116.00	40.62	106.82	18.91			19.99	19.99	19.99	19.99
	Sub-Loop Feeder - Per 4-Wire 64 Kbps Digital Grade Loop - Zone 3		3	UDL	USBFP	44.50	116.00	40.62	106.82	18.91			19.99	19.99	19.99	19.99
	Order Coordination For Specified Conversion Time, per LSR			UDL	OCOSL		34.29									
SUB-LOOPS																
Sub-Loop Feeder																
	Sub Loop Feeder - DS3 - Per Mile Per Month	I		UE3	1L5SL	14.11										
	Sub Loop Feeder - DS3 - Facility Termination Per Month	I		UE3	USBF1	333.26	3,390.00	407.68	165.17	501.31			20.35	10.54	13.32	
	Sub Loop Feeder – STS-1 – Per Mile Per Month	I		UDLSX	1L5SL	14.11										
	Sub Loop Feeder - STS-1 - Facility Termination Per Month	I		UDLSX	USBF7	359.02	3,390.00	407.68	165.17	501.31			20.35	10.54	13.32	

UNBUNDLED NETWORK ELEMENTS - Tennessee														Attachment: 2		Exhibit: B	
CATEGORY		RATE ELEMENTS	Interim	Zone	BCS	USOC	RATES($)					Svc Order Submitted Elec per LSR	Svc Order Submitted Manually per LSR	Incremental Charge - Manual Svc Order vs. Electronic-1st	Incremental Charge - Manual Svc Order vs. Electronic-Add'l	Incremental Charge - Manual Svc Order vs. Electronic-Disc 1st	Incremental Charge - Manual Svc Order vs. Electronic-Disc Add'l
							Rec	Nonrecurring		Nonrecurring Disconnect		OSS Rates($)					
								First	Add'l	First	Add'l	SOMEC	SOMAN	SOMAN	SOMAN	SOMAN	SOMAN
		Sub Loop Feeder – OC-3 – Per Mile Per Month	I		UDLO3	1L5SL	10.71										
		Sub Loop Feeder - OC-3 - Facility Termination Protection Per Month	I		UDLO3	USBF5	56.64										
		Sub Loop Feeder - OC-3 - Facility Termination Per Month	I		UDLO3	USBF2	546.31	3,390.00	407.68	165.17	501.31			20.35	10.54	13.32	
		Sub Loop Feeder - OC-12 - Per Mile Per Month	I		UDL12	1L5SL	13.18										
		Sub Loop Feeder - OC-12 - Facility Termination Protection Per Month	I		UDL12	USBF6	639.98										
		Sub Loop Feeder - OC-12 - Facility Termination Per Month	I		UDL12	USBF3	1,697.00	3,390.00	407.68	165.17	501.31			20.35	10.54	13.32	
		Sub Loop Feeder - OC-48 - Per Mile Per Month	I		UDL48	1L5SL	43.22										
		Sub Loop Feeder - OC-48 - Facility Termination Protection Per Month	I		UDL48	USBF9	320.36										
		Sub Loop Feeder - OC-48 - Facility Termination Per Month	I		UDL48	USBF4	1,457.00	3,576.00	407.68	165.17	501.31			20.35	10.54	13.32	
		Sub Loop Feeder - OC-12 Interface On OC-48	I		UDL48	USBF8	361.44	789.41	407.68	165.17	501.31			20.35	10.54	13.32	
UNBUNDLED LOOP CONCENTRATION																	
		Loop Channelization System			ULC	ULCCS	307.07	307.34	74.37	4.18				20.35	10.54	13.32	13.32
		CO Channel Interface - 2-Wire Voice Grade			ULC	ULCC2	1.20	9.57	9.52	8.66	8.60			20.35	10.54	13.32	13.32
		Unbundled Loop Concentration - System A (TR008)			ULC	UCT8A	500.18	613.60	613.60					20.35	10.54	13.32	13.32
		Unbundled Loop Concentration - System B (TR008)			ULC	UCT8B	54.82	255.67	255.67					20.35	10.54	13.32	13.32
		Unbundled Loop Concentration - System A (TR303)			ULC	UCT3A	539.00	613.60	613.60					20.35	10.54	13.32	13.32
		Unbundled Loop Concentration - System B (TR303)			ULC	UCT3B	92.37	255.67	255.67					20.35	10.54	13.32	13.32
		Unbundled Loop Concentration - DS1 Loop Interface Card			ULC	UCTCO	6.23	74.39	53.07	30.23	8.46			20.35	10.54	13.32	13.32
		Unbundled Loop Concentration - ISDN Loop Interface (Brite Card)			UDN	ULCC1	8.46	8.69	8.65	9.71	9.65			20.35	10.54	13.32	13.32
		Unbundled Loop Concentration - UDC Loop Interface (Brite Card)			UDC	ULCCU	8.46	8.69	8.65	9.71	9.65			20.35	10.54	13.32	13.32
		Unbundled Loop Concentration - -2 Wire Voice-Loop Start or Ground Start Loop Interface (POTS Card)			UEA	ULCC2	2.32	8.69	8.65	9.71	9.65			20.35	10.54	13.32	13.32
		Unbundled Loop Concentration - 2 Wire Voice - Reverse Battery Loop Interface (SPOTS Card)			UEA	ULCCR	12.45	8.69	8.65	9.71	9.65			20.35	10.54	13.32	13.32
		Unbundled Loop Concentration - 4 Wire Voice Loop Interface (Specials Card)			UEA	ULCC4	7.53	8.69	8.65	9.71	9.65			20.35	10.54	13.32	13.332
		Unbundled Loop Concentration - TEST CIRCUIT Card			ULC	UCTTC	35.77	8.69	8.65	9.71	9.65			20.35	10.54	13.32	13.32
		Unbundled Loop Concentration - Digital 19.2 Kbps Data Loop Interface			UDL	ULCC7	11.03	8.69	8.65	9.71	9.65			20.35	10.54	13.32	13.32
		Unbundled Loop Concentration - Digital 56 Kbps Data Loop Interface			UDL	ULCC5	11.03	8.69	8.65	9.71	9.65			20.35	10.54	13.32	13.32
		Unbundled Loop Concentration - Digital 64 Kbps Data Loop Interface			UDL	ULCC6	11.03	8.69	8.65	9.71	9.65			20.35	10.54	13.32	13.32
										9.71							
UNE OTHER, PROVISIONING ONLY - NO RATE																	
		NID - Dispatch and Service Order for NID installation			UENTW	UNDBX											
		UNTW Circuit Id Establishment, Provisioning Only - No Rate			UENTW	UENCE											
		Unbundled Contract Name, Provisioning Only - No Rate			UEANL,UEF,UEQ,UENTW	UNECN											
UNE OTHER, PROVISIONING ONLY - NO RATE																	
		Unbundled Contact Name, Provisioning Only - no rate			UAL,UCL,UDC,UDL,UDN,UEA,UHL,ULC	UNECN	0.00	0.00									
		Unbundled Sub-Loop Feeder-2 Wire Cross Box Jumper - no rate			UEA,UDN,UCL,UDC	USBFQ	0.00	0.00									
		Unbundled Sub-Loop Feeder-4 Wire Cross Box Jumper - no rate			UEA,USL,UCL,UDL	USBFR	0.00	0.00									
		Unbundled DS1 Loop - Superframe Format Option - no rate			USL	CCOSF	0.00	0.00									
		Unbundled DS1 Loop - Expanded Superframe Format option - no rate			USL	CCOEF	0.00	0.00									
HIGH CAPACITY UNBUNDLED LOCAL LOOP																	
		High Capacity Unbundled Local Loop - DS3 - Per Mile per month			UE3	1L5ND	9.19										

UNBUNDLED NETWORK ELEMENTS - Tennessee														Attachment: 2		Exhibit: B	
CATEGORY		RATE ELEMENTS	Interim	Zone	BCS	USOC	RATES($)					Svc Order Submitted Elec per LSR	Svc Order Submitted Manually per LSR	Incremental Charge - Manual Svc Order vs. Electronic-1st	Incremental Charge - Manual Svc Order vs. Electronic-Add'l	Incremental Charge - Manual Svc Order vs. Electronic-Disc 1st	Incremental Charge - Manual Svc Order vs. Electronic-Disc Add'l
							Rec	Nonrecurring		Nonrecurring Disconnect		OSS Rates($)					
								First	Add'l	First	Add'l	SOMEC	SOMAN	SOMAN	SOMAN	SOMAN	SOMAN
		High Capacity Unbundled Local Loop - DS3 - Facility Termination per month			UE3	UE3PX	374.24	595.37	304.50	234.83	170.16			36.84	36.84	19.01	19.01
		High Capacity Unbundled Local Loop - STS-1 - Per Mile per month			UDLSX	1L5ND	9.19										
		High Capacity Unbundled Local Loop - STS-1 - Facility Termination per month			UDLSX	UDLS1	389.35	595.37	304.50	215.82	151.15			36.84	36.84	19.01	19.01
	Note (1): Rates provided in TN for both electronic and manual Loop Makeup are interim and subject to retro-active true-up adjustments pending a permanent rate ruling on these rate elements from the Tennessee Regulatory Authority.																
LOOP MAKE-UP																	
		Loop Makeup - Preordering Without Reservation, per working or spare facility queried (Manual).	R		UMK	UMKLW		0.76	0.76								
		Loop Makeup - Preordering With Reservation, per spare facility queried (Manual).	R		UMK	UMKLP		0.76	0.76								
		Loop Makeup--With or Without Reservation, per working or spare facility queried (Mechanized)	R		UMK	PSUMK		0.76	0.76								
HIGH FREQUENCY SPECTRUM																	
	SPLITTERS-CENTRAL OFFICE BASED																
		Line Sharing Splitter, per System 96 Line Capacity			ULS	ULSDA	100.00	150.00	0.00	0.00	0.00			20.35	10.54	13.32	13.32
		Line Sharing Splitter, per System 24 Line Capacity			ULS	ULSDB	25.00	150.00	0.00	0.00	0.00			20.35	10.54	13.32	13.32
		Line Sharing-DLEC Owned Splitter in CO-CFA activaton-deactivation (per LSOD)			ULS	ULSDG		163.06		92.71				20.35	10.54	13.32	13.32
	END USER ORDERING-CENTRAL OFFICE BASED-HIGH FREQUENCY SPECTRUM AKA LINE SHARING																
		Line Sharing - per Line Activation (BST owned Splitter)			ULS	ULSDC	0.61	40.00	31.39	0.00	0.00			20.35	10.54	13.32	13.32
		Line Sharing - per Subsequent Activity per Line Rearrangement(BST Owned Splitter)			ULS	ULSDS		30.00	15.00					20.35	10.54	13.32	13.32
		Line Sharing - per Subsequent Activity per Line Rearrangement(DLEC Owned Splitter)			ULS	ULSCS		30.00	15.00					20.35	10.54	13.32	13.32
		Line Sharing - per Line Activation (DLEC owned Splitter)	I		ULS	ULSCC	0.61	47.44	19.31	0.00	0.00			20.35	10.54	13.32	13.32
		Line Splitting - per line activation DLEC owned splitter	I		UEPSR UEPSB	UREOS	0.61										
		Line Splitting - per line activation BST owned - physical	I		UEPSR UEPSB	UREBP	0.97	48.96	21.39	35.06	10.79			20.35	10.54	13.32	13.32
		Line Splitting - per line activation BST owned - virtual	I		UEPSR UEPSB	UREBV	0.91	48.96	21.39	35.06	10.79			20.35	10.54	13.32	13.32
UNBUNDLED DEDICATED TRANSPORT																	
	NOTE: INTEROFFICE CHANNEL DEDICATED TRANSPORT - minimum billing period - below DS3=one month, DS3/STS-1=four months																
	INTEROFFICE CHANNEL - DEDICATED TRANSPORT																
		Interoffice Channel - Dedicated Transport - 2-Wire Voice Grade - Per Mile per month			U1TVX	1L5XX	0.0054										
		Interoffice Channel - Dedicated Transport- 2- Wire Voice Grade - Facility Termination per month			U1TVX	U1TV2	18.58	55.39	17.37	27.96	3.51			20.35	21.09	9.80	10.54
		Interoffice Channel - Dedicated Transpor t- 2-Wire Voice Grade Rev Bat. - Per Mile per month			U1TVX	1L5XX	0.0054										
		Interoffice Channel - Dedicated Transport- 2- Wire VG Rev Bat. - Facility Termination per month			U1TVX	U1TR2	18.58	55.39	17.37	27.96	3.51			20.35	21.09	9.80	10.54
		Interoffice Channel - Dedicated Transport - 4-Wire Voice Grade - Per Mile per month			U1TVX	1L5XX	0.0054										
		Interoffice Channel - Dedicated Transport - 4- Wire Voice Grade - Facility Termination per month			U1TVX	U1TV4	24.09	37.87	26.02	30.78	13.07			15.08	15.08	8.66	8.66
		Interoffice Channel - Dedicated Transport - 56 kbps - per mile per month			U1TDX	1L5XX	0.0174										
		Interoffice Channel - Dedicated Transport - 56 kbps - Facility Termination per month			U1TDX	U1TD5	17.98	55.39	17.37	27.96	3.51			20.35	21.09	9.80	10.54
		Interoffice Channel - Dedicated Transport - 64 kbps - per mile per month			U1TDX	1L5XX	0.0174										
		Interoffice Channel - Dedicated Transport - 64 kbps - Facility Termination per month			U1TDX	U1TD6	17.98	55.39	17.37	27.96	3.51			20.35	21.09	9.80	10.54
		Interoffice Channel - Dedicated Channel - DS1 - Per Mile per month			U1TD1	1L5XX	0.3562										
		Interoffice Channel - Dedicated Tranport - DS1 - Facility Termination per month			U1TD1	U1TF1	77.86	112.40	76.27	19.55	14.99			20.35	21.09	9.80	10.54
		Interoffice Channel - Dedicated Transport - DS3 - Per Mile per month			U1TD3	1L5XX	2.34										

UNBUNDLED NETWORK ELEMENTS - Tennessee														Attachment: 2		Exhibit: B	
CATEGORY		RATE ELEMENTS	Interim	Zone	BCS	USOC	RATES($)					Svc Order Submitted Elec per LSR	Svc Order Submitted Manually per LSR	Incremental Charge - Manual Svc Order vs. Electronic-1st	Incremental Charge - Manual Svc Order vs. Electronic-Add'l	Incremental Charge - Manual Svc Order vs. Electronic-Disc 1st	Incremental Charge - Manual Svc Order vs. Electronic-Disc Add'l
							Rec	Nonrecurring		Nonrecurring Disconnect		OSS Rates($)					
								First	Add'l	First	Add'l	SOMEC	SOMAN	SOMAN	SOMAN	SOMAN	SOMAN
		Interoffice Channel - Dedicated Transport - DS3 - Facility Termination per month			U1TD3	U1TF3	848.99	395.29	176.56	109.04	105.91			36.84	36.84	19.01	19.01
		Interoffice Channel - Dedicated Transport - STS-1 - Per Mile per month			U1TS1	1L5XX	2.34										
		Interoffice Channel - Dedicated Transport - STS-1 - Facility Termination per month			U1TS1	U1TFS	849.30	395.29	176.56	109.04	105.91			36.84	36.84	19.01	19.01
	LOCAL CHANNEL - DEDICATED TRANSPORT																
	NOTE: LOCAL CHANNEL DEDICATED TRANSPORT - minimum billing period - below DS3=one month, DS3/STS-1=four months																
		Local Channel - Dedicated - 2-Wire Voice Grade per month - Zone 1		1	ULDVX	ULDV2	17.18	199.33	24.16	54.81	4.80						
		Local Channel - Dedicated - 2-Wire Voice Grade per month - Zone 2		2	ULDVX	ULDV2	22.44	199.33	24.16	54.81	4.80						
		Local Channel - Dedicated - 2-Wire Voice Grade per month - Zone 3		3	UNDVX	ULDV2	29.34	199.33	24.16	54.81	4.80						
		Local Channel - Dedicated - 2-Wire Voice Grade Rev Bat per month			ULDVX	ULDR2								20.35	21.09	9.80	10.54
		Local Channel - Dedicated - 2-Wire Voice Grade Rev. Bat. Per month - Zone 1		1	ULDVX	ULDR2	17.18	199.33	24.16	54.81	4.80						
		Local Channel - Dedicated - 2-Wire Voice Grade Rev. Bat. Per Month - Zone 2		2	ULDVX	ULDR2	22.44	199.33	24.16	54.81	4.80						
		Local Channel - Dedicated - 2-Wire Voice Grade Rev. Bat. Per Month - Zone 3		3	ULDVX	ULDR2	29.34	199.33	24.16	54.81	4.80						
		Local Channel - Dedicated - 4-Wire Voice Grade per month - Zone 1		1	UNDVX	ULDV4	18.18	201.53	24.83	55.52	5.51						
		Local Channel - Dedicated - 4-Wire Voice Grade per month - Zone 2		2	UNDVX	ULDV4	23.74	201.53	24.83	55.52	5.51						
		Local Channel - Dedicated - 4-Wire Voice Grade per month - Zone 3		3	UNDVX	ULDV4	31.05	201.53	24.83	55.52	5.51						
		Local Channel - Dedicated - DS1 per month - Zone 1		1	ULDD1	ULDF1	36.24	277.35	233.26	33.18	22.30						
		Local Channel - Dedicated - DS1 per month - Zone 2		2	ULDD1	ULDF1	47.33	277.35	233.26	33.18	22.30						
		Local Channel - Dedicated - DS1 per month - Zone 3		3	ULDD1	ULDF1	61.89	277.35	233.26	33.18	22.30						
		Local Channel - Dedicated - DS3 - Per Mile per month			ULDD3	1L5NC	7.15										
		Local Channel - Dedicated - DS3 - Facility Termination per month			ULDD3	ULDF3	611.30	595.37	304.50	215.82	151.15			36.84	36.84	19.01	19.01
		Local Channel - Dedicated - STS-1- Per Mile per month			ULDS1	1L5NC	7.15										
		Local Channel - Dedicated - STS-1 - Facility Termination per month			ULDS1	ULDFS	599.59	588.07	297.20	215.82	151.15			20.35	21.09	9.80	10.54
MULTIPLEXERS																	
		Channelization - DS1 to DS0 Channel System			UXTD1	MQ1	80.77	141.67	77.11	14.51	13.46			20.35	9.80	11.49	1.18
		OCU-DP COCI (data) - DS1 to DS0 Channel System - per month (2.4-64kbs)			UDL	1D1DD	1.82	6.07	4.66					20.35	9.80	11.49	1.18
		2-wire ISDN COCI (BRITE) - DS1 to DS0 Channel Systsem - per month			UDN	UC1CA	3.10	6.07	4.66					20.35	9.80	11.49	1.18
		Voice Grade COCI - DS1 to DS0 Channel System - per month			UEA	1D1VG	0.91	6.07	4.66					20.35	9.80	11.49	1.18
		DS3 to DS1 Channel System per month			UXTD3	MQ3	222.98	308.03	108.47	44.47	42.62			20.35	9.80	11.49	1.18
		STS1 to DS1 Channel System per month			UXTS1	MQ3	222.98	308.03	108.47	44.47	42.62			20.35	21.09	9.80	9.80
		DS3 Interface Unit (DS1 COCI) used with Loop per month			USL	UC1D1	17.58	6.07	4.66					20.35	9.80	11.49	1.18
		DS3 Interface Unit (DS1 COCI) used with Local Channel per month			ULDD1	UC1D1		6.07	4.66					20.35	9.80	11.49	1.18
		DS3 Interface Unit (DS1 COCI) used with Interoffice Channel per month			U1TD1	UC1D1		6.07	4.66					20.35	9.80	11.49	1.18
DARK FIBER																	
		Dark Fiber, Four Fiber Strands, Per Route Mile or Fraction Thereof per month - Local Channel			UDF	1L5DC	58.83										
		NRC Dark Fiber - Local Channel			UDF	UDFC4		1,121.00	153.19	580.26	357.17			20.35	21.09	9.80	10.54
		Dark Fiber, Four Fiber Strands, Per Route Mile or Fraction Thereof per month - Interoffice Channel			UDF	1L5DF	28.74										
		NRC Dark Fiber - Interoffice Channel			UDF	UDF14		1,121.00	153.19	580.26	357.17			20.35	21.09	9.80	10.54

UNBUNDLED NETWORK ELEMENTS - Tennessee													Attachment: 2		Exhibit: B	
CATEGORY	RATE ELEMENTS	Interim	Zone	BCS	USOC	RATES($)					Svc Order Submitted Elec per LSR	Svc Order Submitted Manually per LSR	Incremental Charge - Manual Svc Order vs. Electronic-1st	Incremental Charge - Manual Svc Order vs. Electronic-Add'l	Incremental Charge - Manual Svc Order vs. Electronic-Disc 1st	Incremental Charge - Manual Svc Order vs. Electronic-Disc Add'l
						Rec	Nonrecurring		Nonrecurring Disconnect		OSS Rates($)					
							First	Add'l	First	Add'l	SOMEC	SOMAN	SOMAN	SOMAN	SOMAN	SOMAN
	Dark Fiber, Four Fiber Strands, Per Route Mile or Fraction Thereof per month - Local Loop			UDF	1L5DL	58.83										
	NRC Dark Fiber - Local Loop			UDF	UDFL4		1,121.00	153.19	580.26	357.17			20.35	21.09	9.80	10.54
TRANSPORT OTHER																
8XX ACCESS TEN DIGIT SCREENING																
	8XX Access Ten Digit Screening, Per Call			OHD		0.0005192										
	8XX Access Ten Digit Screening, Reservation Charge Per 8XX Number Reserved			OHD	N8R1X		5.21	0.76					20.35	20.35	13.28	13.28
	8XX Access Ten Digit Screening, Per 8XX No. Established W/O POTS Translations			OHD			11.47	1.46	7.34	0.7602			20.35	20.35	13.28	13.28
	8XX Access Ten Digit Screening, Per 8XX No. Established With POTS Translations			OHD	N8FTX		11.47	1.46	7.34	0.7602			20.35	20.35	13.28	13.28
	8XX Access Ten Digit Screening, Customized Area of Service Per 8XX Number			OHD	N8FCX		4.47	2.24					20.35	20.35	13.28	13.28
	8XX Access Ten Digit Screening, Multiple InterLATA CXR Routing Per CXR Requested Per 8XX No.			OHD	N8FMX		5.23	3.00					20.35	20.35	13.28	13.28
	8XX Access Ten Digit Screening, Change Charge Per Request			OHD	N8FAX		5.97	0.76					20.35	20.35	13.28	13.28
	8XX Access Ten Digit Screening, Call Handling and Destination Features			OHD	N8FDX		4.47						20.35	20.35	13.28	13.28
LINE INFORMATION DATA BASE ACCESS (LIDB)																
	LIDB Common Transport Per Query			OQT		0.0000354										
	LIDB Validation Per Query			OQU		0.0117403										
	LIDB Originating Point Code Establishment or Change			OQT, OQU	NRPBX		49.03						20.35	20.35	13.28	13.28
SIGNALING (CCS7)																
	CCS7 Signaling Termination, Per STP Port			UDB	PT8SX	138.41										
	CCS7 Signaling Usage, Per TCAP Message			UDB		0.0000916										
	CCS7 Signaling Connection, Per link (A link)			UDB	TPP++	17.84	130.84	130.84					20.35	20.35	13.32	13.32
	CCS7 Signaling Connection, Per link (B link) (also known as D link)			UDB	TPP++	17.84	130.84	130.84					20.35	20.35	13.32	13.32
	CCS7 Signaling Usage, Per ISUP Message			UDB		0.0000373										
	CCS7 Signaling Usage Surrogate, per link per LATA			UDB	STU56	352.30										
	Signaling Point Code, per Originating Point Code Establishment or Change, per STP			UDB	CCAPO		121.77	121.77					20.35	20.35	13.32	13.32
CALLING NAME (CNAM) SERVICE																
	CNAM for DB Owners, Per Query			OQV		0.0010541										
	CNAM for Non DB Owners, Per Query			OQV		0.0010541										
	CNAM (Non-Databs Owner), NRC, applies when using the Character Based User Interface (CHUI)			OQV	CDDCH		595.00	595.00					20.35	20.35	13.28	13.28
OPERATOR CALL PROCESSING																
	Oper. Call Processing - Oper. Provided, Per Min. - Using BST LIDB					1.08										
	Oper. Call Processing - Oper. Provided, Per Min. - Using Foreign LIDB					1.13										
	Oper. Call Processing - Fully Automated, per Call - Using BST LIDB					0.1010353										
	Oper. Call Processing - Fully Automated, per Call - Using Foreign LIDB					0.122818										
INWARD OPERATOR SERVICES																
	Inward Operator Services - Verification, Per Minute					1.03										
	Inward Operator Services - Verification and Emergency Interrupt - Per Minute					1.03										
BRANDING - OPERATOR CALL PROCESSING																
	Recording of Custom Branded OA Announcement				CBAOS		1,555.00	1,553.00	7.03	7.03			19.99	19.99	19.99	19.99
	Loading of Custom Branded OA Announcement per shelf/NAV				CBAOL		240.71	240.71					19.99	19.99		
	Unbranding via OLNS for UNEP CLEC															
	Loading of OA per OCN (Regional)						1,200.00	1,200.00								
DIRECTORY ASSISTANCE SERVICES																
	DIRECTORY ASSISTANCE ACCESS SERVICE															
	Directory Assistance Access Service Calls, Charge Per Call					0.2286787										

UNBUNDLED NETWORK ELEMENTS - Tennessee													Attachment: 2		Exhibit: B	
CATEGORY	RATE ELEMENTS	Interim	Zone	BCS	USOC	RATES($)					Svc Order Submitted Elec per LSR	Svc Order Submitted Manually per LSR	Incremental Charge - Manual Svc Order vs. Electronic-1st	Incremental Charge - Manual Svc Order vs. Electronic-Add'l	Incremental Charge - Manual Svc Order vs. Electronic-Disc 1st	Incremental Charge - Manual Svc Order vs. Electronic-Disc Add'l
						Rec	Nonrecurring		Nonrecurring Disconnect		OSS Rates($)					
							First	Add'l	First	Add'l	SOMEC	SOMAN	SOMAN	SOMAN	SOMAN	SOMAN
	DIRECTORY ASSISTANCE CALL COMPLETION ACCESS SERVICE (DACC)															
	Directory Assistance Call Completion Access Service (DACC), Per Call Attempt					0.0364771										
	NUMBER SERVICES INTERCEPT ACCESS SERVICE															
	Number Services Intercept Per Query					0.017793										
	DIRECTORY TRANSPORT (DT)															
	DT-Local Channel DS1					40.99	277.35	233.26	33.18	22.30						
	DT-DS1 Level Interoffice per mile					0.3562										
	DT-DS1 Level Interoffice per facility termination					77.86	112.40	76.27	19.55	14.99						
	SWA Common Transport per Directory Assistance Access Service Per Call					0.000271										
	SWA Common Transport per Directory Assistance Access Service Per Call Per Mile					0.0000165										
	Access Tandem Switching Per Directory Assistance Access Service Per Call					0.0001875										
	DT- Directory Assistance Interconnection Per Directory Assistance Service Call					0.00										
	DT-Installation NRC, Per Trunk or Signaling Connection						204.62	4.43	136.09	4.43						
	DT Local Channel DS1-Incremental Cost-Manual Svc Order vs Electronic						45.68	1.76	21.75	1.76						
	DT Interoffice DS1-Incremental Cost-Manual Svc Order vs Electronic						20.35	21.09	9.80	10.54						
DIRECTORY ASSISTANCE SERVICES																
	DIRECTORY ASSISTANCE DATA BASE SERVICE (DADS)															
	Directory Assistance Data Base Service Charge Per Listing					0.0485										
	Directory Assistance Data Base Service, per month				DBSOF	104.13										
BRANDING - DIRECTORY ASSISTANCE																
	Facility Based CLEC															
	Recording and Provisioning of DA Custom Branded Announcement			AMT	CBADA		1,555.00	1,553.00	7.03	7.03						
	Loading of Custom Branded Announcement per DRAM Card/Switch			AMT	CBADC		240.71	240.71								
	UNEP CLEC															
	Recording of DA Custom Branded Announcement						1,555.00	1,553.00	7.03	7.03						
	Loading of DA Custom Branded Announcement per DRAM Card/Switch per OCN						240.71	240.71								
	Unbranding via OLNS for UNEP CLEC															
	Loading of DA per OCN (1 OCN per Order)						420.00	420.00								
	Loading of DA per Switch per OCN						16.00	16.00								
SELECTIVE ROUTING																
	Selective Routing Per Unique Line Class Code Per Request Per Switch				USRCR		179.60	179.60					20.35	20.35		
VIRTUAL COLLOCATION																
	Virtual Collocation - Application Cost			AMTFS	EAF		2,633.00	2,633.00								
	Virtual Collocation - Cable Installation Cost, per cable			AMTFS	ESPCX		1,749.00	1,749.00								
	Virtual Collocation - Floor Space, per sq. ft.			AMTFS	ESPVX	3.91										
	Virtual Collocation - Power, per breaker amp			AMTFS	ESPAX	6.79										
	Virtual Collocation - Cable Support Structure, per entrance cable			AMTFS	ESPSX	17.87										
	Virtual Collocation - 2-wire Cross Connects (loop)			UEANL,UEA,UDN,UDC,UAL,UHL,UCL,UEQ, AMTFS, UDL, UNCVX, UNCDX, UNCNX	UEAC2	0.57	11.62	9.90	10.38	8.66			2.07	2.81	0.67	1.41
	Virtual Collocation - 4-wire Cross Connects (loop)			UEA,UHL,UCL,UDL, AMTFS, UAL, UDN, UNCVX, UNCDX	UEAC4	0.57	11.81	10.04	10.44	8.67			2.07	2.81	0.67	1.41

UNBUNDLED NETWORK ELEMENTS - Tennessee														Attachment: 2		Exhibit: B	
CATEGORY		RATE ELEMENTS	Interim	Zone	BCS	USOC	RATES($)					Svc Order Submitted Elec per LSR	Svc Order Submitted Manually per LSR	Incremental Charge - Manual Svc Order vs. Electronic-1st	Incremental Charge - Manual Svc Order vs. Electronic-Add'l	Incremental Charge - Manual Svc Order vs. Electronic-Disc 1st	Incremental Charge - Manual Svc Order vs. Electronic-Disc Add'l
							Rec	Nonrecurring		Nonrecurring Disconnect		OSS Rates($)					
								First	Add'l	First	Add'l	SOMEC	SOMAN	SOMAN	SOMAN	SOMAN	SOMAN
		Virtual Collocation - 2-Fiber Cross Connects			AMTFS,UDL12, UDLO3, U1T48, U1T12, U1T03, ULDO3, ULD12, ULD48, UDF	CNC2F	3.03	41.56	29.82	12.96	10.34			2.69	2.69	1.56	1.56
		Virtual Collocation - 4-Fiber Cross Connects			AMTFS,UDL12, UDLO3, U1T48, U1T12, U1T03, ULDO3, ULD12, ULD48, UDF	CNC4F	6.06	50.53	38.78	16.97	14.35			2.69	2.69	1.56	1.56
		Virtual collocation - DS1 Cross Connects			USL,ULC,AMTFS, ULR, UXTD1, UNC1X, ULDD1, U1TD1, USLEL, UNLD1	CNC1X	1.32	32.22	17.76	10.46	8.75			2.07	2.81	0.67	1.41
		Virtual collocation - DS3 Cross Connects			USL,ULC,AMTFS,UE3, U1TD3, UXTS1, UXTD3, UNC3X, UNCSX, ULDD3, U1TS1, ULDS1, UDLSX, UNLD3	CND3X	12.32	29.97	16.30	12.03	8.99			2.07	2.81	0.67	1.41
		Virtual Collocation - Co-Carrier Cross Connects - Fiber Cable Support Structure, per linear foot			AMTFS	VE1CB	0.0031										
		Virtual Collocation - Co-Carrier Cross Connects - Copper/Coax Cable Support Structure, per linear ft			AMTFS	VE1CD	0.0045										
		Virtual Collocation - Co-Carrier Cross Connects - Fiber Cable Support Structure,per cable			AMTFS	VE1CC		555.03									
		Virtual Collocation - Co-Carrier Cross Connects - Copper/Coax Cable Support Structure, per cable			AMTFS	VE1CE		555.03									
		Virtual collocation - Security Escort - Basic, per half hour			AMTFS	SPTBX		33.15	20.44								
		Virtual collocation - Security Escort - Overtime, per half hour			AMTFS	SPTOX		41.50	25.61								
		Virtual collocation - Security Escort - Premium, per half hour			AMTFS	SPTPX		49.86	30.79								
		Virtual collocation - Maintenance in CO - Basic, per half hour			AMTFS	CTRLX		30.64	30.64								
		Virtual collocation - Maintenance in CO - Overtime, per half hour			AMTFS	SPTOM		35.77	35.77								
		Virtual collocation - Maintenance in CO - Premium per half hour			AMTFS	SPTPM		40.90	40.90								
VIRTUAL COLLOCATION																	
		Virtual Collocation - 2-wire Cross Connect, Exchange Port 2-Wire Analog - Res			UEPSR	VE1R2	0.30	19.20	19.20					20.35	10.54	13.32	1.40
		Virtual Collocation 2-Wire Cross Connect, Exchange Port 2-Wire Line Side PBX Trunk - Bus			UEPSP	VE1R2	0.30	19.20	19.20					20.35	10.54	13.32	1.40
		Virtual Collocation 2-Wire Cross Connect, Exchange Port 2-Wire Voice Grade PBX Trunk - Res			UEPSE	VE1R2	0.30	19.20	19.20					20.35	10.54	13.32	1.40
		Virtual Collocation 2-Wire Cross Connect, Exchange Port 2-Wire Analog Bus			UEPSB	VE1R2	0.30	19.20	19.20					20.35	10.54	13.32	1.40
		Virtual Collocation 2-Wire Cross Connect, Exchnage Port 2-Wire ISDN			UEPSX	VE1R2	0.30	19.20	19.20					20.35	10.54	13.32	1.40
		Virtual Collocation 2-Wire Cross Connect, Exchange Port 2-Wire ISDN			UEPTX	VE1R2	0.30	19.20	19.20					20.35	10.54	13.32	1.40
		Virtual Collocation 4-Wire Cross Connect, Exchange Port 4-Wire ISDN DS1			UEPEX	VE1R4	0.50	19.20	19.20					20.35	10.54	13.32	1.40
VIRTUAL COLLOCATION																	
		Virtual Collocation-2 Wire Cross Connects (Loop) for Line Splitting			UEPSR, UEPSB	VE1LS	0.57	11.62	9.90	10.38	8.66			19.99	19.99	19.99	19.99
AIN SELECTIVE CARRIER ROUTING																	
		Regional Service Establishment			SRC	SRCEC		190,638.00						20.35			
		End Office Establishment			SRC	SRCEO		317.55	317.55	3.19	3.19			20.35	20.35	13.28	13.28
		Line/Port NRC, per end user			SRC	SRCLP											

UNBUNDLED NETWORK ELEMENTS - Tennessee														Attachment: 2		Exhibit: B	
CATEGORY		RATE ELEMENTS	Interim	Zone	BCS	USOC	RATES($)					Svc Order Submitted Elec per LSR	Svc Order Submitted Manually per LSR	Incremental Charge - Manual Svc Order vs. Electronic-1st	Incremental Charge - Manual Svc Order vs. Electronic-Add'l	Incremental Charge - Manual Svc Order vs. Electronic-Disc 1st	Incremental Charge - Manual Svc Order vs. Electronic-Disc Add'l
							Rec	Nonrecurring		Nonrecurring Disconnect		OSS Rates($)					
								First	Add'l	First	Add'l	SOMEC	SOMAN	SOMAN	SOMAN	SOMAN	SOMAN
		Query NRC, per query			SRC		0.0206047										
AIN - BELLSOUTH AIN SMS ACCESS SERVICE																	
		AIN SMS Access Service - Service Establishment, Per State, Initial Setup			A1N	CAMSE		135.56	135.56					20.35	20.35	13.28	13.28
		AIN SMS Access Service - Port Connection - Dial/Shared Access			A1N	CAMDP		41.75	41.75					20.35	20.35	13.28	13.28
		AIN SMS Access Service - Port Connection - ISDN Access			A1N	CAM1P		41.75	41.75					20.35	20.35	13.28	13.28
		AIN SMS Access Service - User Identification Codes - Per User ID Code			A1N	CAMAU		96.63	96.63					20.35	20.35	13.28	13.28
		AIN SMS Access Service - Security Card, Per User ID Code, Initial or Replacement			A1N	CAMRC		113.67	113.67					20.35	20.35	13.28	13.28
		AIN SMS Access Service - Storage, Per Unit (100 Kilobytes)					0.0024										
		AIN SMS Access Service - Session, Per Minute					0.0820123										
		AIN SMS Access Service - Company Performed Session, Per Minute					2.27										
AIN - BELLSOUTH AIN TOOLKIT SERVICE																	
		AIN Toolkit Service - Service Establishment Charge, Per State, Initial Setup			CAM	BAPSC		132.04	132.04					20.35	20.35	13.28	13.28
		AIN Toolkit Service - Training Session, Per Customer				BAPVX		7,915.00	7,915.00					20.35	20.35	13.28	13.28
		AIN Toolkit Service - Trigger Access Charge, Per Trigger, Per DN, Term. Attempt				BAPTT		31.21	31.21					20.35	20.35	13.28	13.28
		AIN Toolkit Service - Trigger Access Charge, Per Trigger, Per DN, Off-Hook Delay				BAPTD		31.21	31.21					20.35	20.35	13.28	13.28
		AIN Toolkit Service - Trigger Access Charge, Per Trigger, Per DN, Off-Hook Immediate				BAPTM		31.21	31.21					20.35	20.35	13.28	13.28
		AIN Toolkit Service - Trigger Access Charge, Per Trigger, Per DN, 10-Digit PODP				BAPTO		85.24	85.24					20.35	20.35	13.28	13.28
		AIN Toolkit Service - Trigger Access Charge, Per Trigger, Per DN, CDP				BAPTC		85.24	85.24					20.35	20.35	13.28	13.28
		AIN Toolkit Service - Trigger Access Charge, Per Trigger, Per DN, Feature Code				BAPTF		85.24	85.24					20.35	20.35	13.28	13.28
		AIN Toolkit Service - Query Charge, Per Query					0.0211882										
		AIN Toolkit Service - Type 1 Node Charge, Per AIN Toolkit Subscription, Per Node, Per Query					0.0054774										
		AIN Toolkit Service - SCP Storage Charge, Per SMS Access Account, Per 100 Kilobytes					1.50										
		AIN Toolkit Service - Monthly report - Per AIN Toolkit Service Subscription			CAM	BAPMS	17.43	33.52	33.52					20.35	20.35	13.28	13.28
		AIN Toolkit Service - Special Study - Per AIN Toolkit Service Subscription			CAM	BAPLS	0.1321116	36.23	36.23					20.35	20.35	13.28	13.28
		AIN Toolkit Service - Call Event Report - Per AIN Toolkit Service Subscription			CAM	BAPDS	17.35	33.52	33.52					20.35	20.35	13.28	13.28
		AIN Toolkit Service - Call Event Special Study - Per AIN Toolkit Service Subscription			CAM	BAPES	0.0511435	36.23	36.23					20.35	20.35	13.28	13.28
ENHANCED EXTENDED LINK (EELs)																	
	NOTE: New EELs available in GA, TN, KY, LA, MS, & SC and density zone 1 of following MSAs: Orlando, FL; Miami, FL; Ft. Lauderdale, FL;																
	NOTE: Charlotte-Gastonia-Rockhill, NC; Greensboro-Winston Salem-High Point, NC. Use all rates below except Switch As Is Charge.																
	NOTE: In all states, EEL network elements shown below also apply to currently combined facilities which are converted to UNE rates. A Switch As Is Charge applies to currently combined facilities converted to UNEs.(Non-recurring rates do not apply.)																
	NOTE: In GA, TN, KY, LA, MS & SC the EEL network elements apply to ordinarily combined network elements.(No Switch As Is Charge.)																
	2-WIRE VOICE GRADE EXTENDED LOOP WITH DEDICATED DS1 INTEROFFICE TRANSPORT (EEL)																
		First 2-Wire VG Loop(SL2) in a DS1 Interofficed Transport Combination - Zone 1		1	UNCVX	UEAL2	16.56	108.76	35.47	72.94	10.86			20.35	21.09	9.80	10.54
		First 2-Wire VG Grade Loop(SL2) in a DS1 Interofficed Transport Combination - Zone 2		2	UNCVX	UEAL2	21.63	108.76	35.47	72.94	10.86			20.35	21.09	9.80	10.54
		First 2-Wire VG Grade Loop(SL2) in a DS1 Interofficed Transport Combination - Zone 3		3	UNCVX	UEAL2	28.28	108.76	35.47	72.94	10.86			20.35	21.09	9.80	10.54
		Interoffice Transport - Dedicated - DS1 combination - Per Mile per month			UNC1X	1L5XX	0.3562										

CATEGORY		RATE ELEMENTS	Interim	Zone	BCS	USOC	RATES($)					Svc Order Submitted Elec per LSR	Svc Order Submitted Manually per LSR	Incremental Charge - Manual Svc Order vs. Electronic-1st	Incremental Charge - Manual Svc Order vs. Electronic-Add'l	Incremental Charge - Manual Svc Order vs. Electronic-Disc 1st	Incremental Charge - Manual Svc Order vs. Electronic-Disc Add'l
							Rec	Nonrecurring		Nonrecurring Disconnect		OSS Rates($)					
								First	Add'l	First	Add'l	SOMEC	SOMAN	SOMAN	SOMAN	SOMAN	SOMAN
		Interoffice Transport - Dedicated - DS1 combination - Facility Termination per month			UNC1X	U1TF1	77.86	171.24	113.12	70.07	30.90			20.35	21.09	9.80	10.54
		DS1 Channelization System Per Month			UNC1X	MQ1	80.77	105.76	14.48	3.04	2.74						
		Voice Grade COCI - DS1 To Ds0 Interface - Per Month			UNCVX	1D1VG	0.91	5.70	4.42								
		Each Additional 2-Wire VG Loop(SL 2) in the same DS1 Interoffice Transport Combination - Zone 1		1	UNCVX	UEAL2	16.56	108.76	35.47	72.94	10.86			20.35	21.09	9.80	10.54
		Each Additional 2-Wire VG Loop(SL2) in the same DS1 Interoffice Transport Combination - Zone 2		2	UNCVX	UEAL2	21.63	108.76	35.47	72.94	10.86			20.35	21.09	9.80	10.54
		Each Additional 2-Wire VG Loop(SL2) in the same DS1 Interoffice Transport Combination - Zone 3		3	UNCVX	UEAL2	28.28	108.76	35.47	72.94	10.86			20.35	21.09	9.80	10.54
		Voice Grade COCI - DS1 to DS0 Channel System combination - per month			UNCVX	1D1VG	0.91	5.70	4.42								
		Nonrecurring Currently Combined Network Elements Switch -As-Is Charge			UNC1X	UNCCC		52.73	24.62	9.12	9.12			20.35	21.09	9.80	10.54
	4-WIRE VOICE GRADE EXTENDED LOOP WITH DEDICATED DS1 INTEROFFICE TRANSPORT (EEL)																
		First 4-Wire Analog Voice Grade Loop in a DS1 Interoffice Transport Combination - Zone 1		1	UNCVX	UEAL4	24.70	108.76	35.47	72.94	10.86			20.35	21.09	9.80	10.54
		First 4-Wire Analog Voice Grade Loop in a DS1 Interoffice Transport Combination - Zone 2		2	UNCVX	UEAL4	32.26	108.76	35.47	72.94	10.86			20.35	21.09	9.80	10.54
		First 4-Wire Analog Voice Grade Loop in a DS1 Interoffice Transport Combination - Zone 3		3	UNCVX	UEAL4	42.18	108.76	35.47	72.94	10.86			20.35	21.09	9.80	10.54
		Interoffice Transport - Dedicated - DS1 combination - Per Mile Per Month			UNC1X	1L5XX	0.3562										
		Interoffice Transport - Dedicated - DS1 - Facility Termination Per Month			UNC1X	U1TF1	77.86	171.24	113.12	70.07	30.90			20.35	21.09	9.80	10.54
		Channelization - Channel System DS1 to DS0 combination Per Month			UNC1X	MQ1	80.77	105.76	14.48	3.04	2.74						
		Voice Grade COCI - DS1 to DS0 Channel System combination - per month			UNCVX	1D1VG	0.91	5.70	4.42								
		Additional 4-Wire Analog Voice Grade Loop in same DS1 Interoffice Transport Combination - Zone 1		1	UNCVX	UEAL4	24.70	108.76	35.47	72.94	10.86			20.35	21.09	9.80	10.54
		Additional 4-Wire Analog Voice Grade Loop in same DS1 Interoffice Transport Combination - Zone 2		2	UNCVX	UEAL4	32.26	108.76	35.47	72.94	10.86			20.35	21.09	9.80	10.54
		Additional 4-Wire Analog Voice Grade Loop in same DS1 Interoffice Transport Combination - Zone 3		3	UNCVX	UEAL4	42.18	108.76	35.47	72.94	10.86			20.35	21.09	9.80	10.54
		Voice Grade COCI - DS1 to DS0 Channel System combination - per month			UNCVX	1D1VG	0.91	5.70	4.42								
		Nonrecurring Currently Combined Network Elements Switch -As-Is Charge			UNC1X	UNCCC		52.73	24.62	9.12	9.12			20.35	21.09	9.80	10.54
	4-WIRE 56 KBPS EXTENDED DIGITAL LOOP WITH DEDICATED DS1 INTEROFFICE TRANSPORT (EEL)																
		First 4-Wire 56Kbps Digital Grade Loop in a DS1 Interoffice Transport Combination - Zone 1		1	UNCDX	UDL56	31.10	108.76	35.47	72.94	10.86			20.35	21.09	9.80	10.54
		First 4-wire 56Kbps Digital Grade Loop in a DS1 Interoffice Transport Combination - Zone 2		2	UNCDX	UDL56	40.61	108.76	35.47	72.94	10.86			20.35	21.09	9.80	10.54
		First 4-Wire 56Kbps Digital Grade Loop in a DS1 Interoffice Transport Combination - Zone 3		3	UNCDX	UDL56	53.11	108.76	35.47	72.94	10.86			20.35	21.09	9.80	10.54
		Interoffice Transport - Dedicated - DS1 combination - Per Mile Per Month			UNC1X	1L5XX	0.3562										
		Interoffice Transport - Dedicated - DS1 - combination Facility Termination Per Month			UNC1X	U1TF1	77.86	171.24	113.12	70.07	30.90			20.35	21.09	9.80	10.54
		Channelization - Channel System DS1 to DS0 combination Per Month			UNC1X	MQ1	80.77	105.76	14.48	3.04	2.74						
		OCU-DP COCI (data) - DS1 to DS0 Channel System - per month (2.4-64kbs)			UNCDX	1D1DD	0.91	5.70	4.42								
		Additional 4-Wire 56Kbps Digital Grade Loopin same DS1 Interoffice Transport Combination - Zone 1		1	UNCDX	UDL56	31.10	108.76	35.47	72.94	10.86			20.35	21.09	9.80	10.54
		Additional 4-Wire 56Kbps Digital Grade Loopin same DS1 Interoffice Transport Combination - Zone 2		2	UNCDX	UDL56	40.61	108.76	35.47	72.94	10.86			20.35	21.09	9.80	10.54

CATEGORY	RATE ELEMENTS	Interim	Zone	BCS	USOC	RATES($)					Svc Order Submitted Elec per LSR	Svc Order Submitted Manually per LSR	Incremental Charge - Manual Svc Order vs. Electronic-1st	Incremental Charge - Manual Svc Order vs. Electronic-Add'l	Incremental Charge - Manual Svc Order vs. Electronic-Disc 1st	Incremental Charge - Manual Svc Order vs. Electronic-Disc Add'l
						Rec	Nonrecurring		Nonrecurring Disconnect		OSS Rates($)					
							First	Add'l	First	Add'l	SOMEC	SOMAN	SOMAN	SOMAN	SOMAN	SOMAN
	Additional 4-Wire 56Kbps Digital Grade Loopin same DS1 Interoffice Transport Combination - Zone 3		3	UNCDX	UDL56	53.11	108.76	35.47	72.94	10.86			20.35	21.09	9.80	10.54
	OCU-DP COCI (data) - DS1 to DS0 Channel System - combination per month (2.4-64kbs)			UNCDX	1D1DD	0.91	5.70	4.42								
	Nonrecurring Currently Combined Network Elements Switch -As-Is Charge			UNC1X	UNCCC		52.73	24.62	9.12	9.12			20.35	21.09	9.80	10.54
4-WIRE 64 KBPS EXTENDED DIGITAL LOOP WITH DEDICATED DS1 INTEROFFICE TRANSPORT (EEL)																
	First 4-Wire 64Kbps Digital Grade Loop in a DS1 Interoffice Transport Combination - Zone 1		1	UNCDX	UDL64	31.10	108.76	35.47	72.94	10.86			20.35	21.09	9.80	10.54
	First 4-Wire 64Kbps Digital Grade Loop in a DS1 Interoffice Transport Combination - Zone 2		2	UNCDX	UDL64	40.61	108.76	35.47	72.94	10.86			20.35	21.09	9.80	10.54
	First 4-Wire 64Kbps Digital Grade Loop in a DS1 Interoffice Transport Combination - Zone 3		3	UNCDX	UDL64	53.11	108.76	35.47	72.94	10.86			20.35	21.09	9.80	10.54
	Interoffice Transport - Dedicated - DS1 combination - Per Mile Per Month			UNC1X	1L5XX	0.3562										
	Interoffice Transport - Dedicated - DS1 combination - Facility Termination Per Month			UNC1X	U1TF1	77.86	171.24	113.12	70.07	30.90			20.35	21.09	9.80	10.54
	Channelization - Channel System DS1 to DS0 combination Per Month			UNC1X	MQ1	80.77	105.76	14.48	3.04	2.74			20.35	21.09	9.80	10.54
	OCU-DP COCI (data) - DS1 to DS0 Channel System combination - per month (2.4-64kbs)			UNCDX	1D1DD	0.91	5.70	4.42								
	Additional 4-Wire 64Kbps Digital Grade Loopin same DS1 Interoffice Transport Combination - Zone 1		1	UNCDX	UDL64	31.10	108.76	35.47	72.94	10.86			20.35	21.09	9.80	10.54
	Additional 4-Wire 64Kbps Digital Grade Loopin same DS1 Interoffice Transport Combination - Zone 2		2	UNCDX	UDL64	40.61	108.76	35.47	72.94	10.86			20.35	21.09	9.80	10.54
	Additional 4-Wire 64Kbps Digital Grade Loopin same DS1 Interoffice Transport Combination - Zone 3		3	UNCDX	UDL64	53.11	108.76	35.47	72.94	10.86			20.35	21.09	9.80	10.54
	OCU-DP COCI (data) - DS1 to DS0 Channel System combination - per month (2.4-64kbs)			UNCDX	1D1DD	0.91	5.70	4.42								
	Nonrecurring Currently Combined Network Elements Switch -As-Is Charge			UNC1X	UNCCC		52.73	24.62	9.12	9.12			20.35	21.09	9.80	10.54
4-WIRE DS1 DIGITAL EXTENDED LOOP WITH DEDICATED DS1 INTEROFFICE TRANSPORT (EEL)																
	4-Wire DS1 Digital Loop in Combination with DS1 Interoffice Transport - Zone 1		1	UNC1X	USLXX	57.73	228.40	161.74	79.87	24.88			20.35	21.09	9.80	10.54
	4-Wire DS1 Digital Loop in Combination with DS1 Interoffice Transport - Zone 2		2	UNC1X	USLXX	75.40	228.40	161.74	79.87	24.88			20.35	21.09	9.80	10.54
	4-Wire DS1 Digital Loop in Combination with DS1 Interoffice Transport - Zone 3		3	UNC1X	USLXX	98.59	228.40	161.74	79.87	24.88			20.35	21.09	9.80	10.54
	Interoffice Transport - Dedicated - DS1 combination - Per Mile Per Month			UNC1X	1L5XX	0.3562										
	Interoffice Transport - Dedicated - DS1 combination - Facility Termination Per Month			UNC1X	U1TF1	77.86	171.24	113.12	70.07	30.90			20.35	21.09	9.80	10.54
	Nonrecurring Currently Combined Network Elements Switch -As-Is Charge			UNC1X	UNCCC		52.73	24.62	9.12	9.12			20.35	21.09	9.80	10.54
4-WIRE DS1 DIGITAL EXTENDED LOOP WITH DEDICATED DS3 INTEROFFICE TRANSPORT (EEL)																
	First DS1Loop in DS3 Interoffice Transport Combination - Zone 1		1	UNC1X	USLXX	57.73	228.40	161.74	79.87	24.88			20.35	21.09	9.80	10.54
	First DS1Loop in DS3 Interoffice Transport Combination - Zone 2		2	UNC1X	USLXX	75.40	228.40	161.74	79.87	24.88			20.35	21.09	9.80	10.54
	First DS1Loop in DS3 Interoffice Transport Combination - Zone 3		3	UNC1X	USLXX	98.59	228.40	161.74	79.87	24.88			20.35	21.09	9.80	10.54
	Interoffice Transport - Dedicated - DS3 combination - Per Mile Per Month			UNC3X	1L5XX	2.34										
	Interoffice Transport - Dedicated - DS3 - Facility Termination per month			UNC3X	U1TF3	854.97	482.01	153.81	64.43	35.43			20.35	21.09	9.80	10.54
	DS3 to DS1 Channel System combination per month			UNC3X	MQ3	222.98	156.02	49.41	17.12	6.77						
	DS3 Interface Unit (DS1 COCI) combination per month			UNC1X	UC1D1	17.58	5.70	4.42								
	Additional DS1Loop in DS3 Interoffice Transport Combination - Zone 1		1	UNC1X	USLXX	57.73	228.40	161.74	79.87	24.88			20.35	21.09	9.80	10.54

CATEGORY	RATE ELEMENTS	Interim	Zone	BCS	USOC	RATES($) Rec	Nonrecurring First	Nonrecurring Add'l	Nonrecurring Disconnect First	Nonrecurring Disconnect Add'l	Svc Order Submitted Elec per LSR	Svc Order Submitted Manually per LSR	Incremental Charge - Manual Svc Order vs. Electronic-1st	Incremental Charge - Manual Svc Order vs. Electronic-Add'l	Incremental Charge - Manual Svc Order vs. Electronic-Disc 1st	Incremental Charge - Manual Svc Order vs. Electronic-Disc Add'l
											OSS Rates($)					
											SOMEC	SOMAN	SOMAN	SOMAN	SOMAN	SOMAN
	Additional DS1Loop in DS3 Interoffice Transport Combination - Zone 2		2	UNC1X	USLXX	75.40	228.40	161.74	79.87	24.88			20.35	21.09	9.80	10.54
	Additional DS1Loop in DS3 Interoffice Transport Combination - Zone 3		3	UNC1X	USLXX	98.59	228.40	161.74	79.87	24.88			20.35	21.09	9.80	10.54
	DS3 Interface Unit (DS1 COCI) combination per month			UNC1X	UC1D1	17.58	5.70	4.42								
	Nonrecurring Currently Combined Network Elements Switch -As-Is Charge			UNC3X	UNCCC		52.73	24.62	9.12	9.12			20.35	21.09	9.80	10.54
2-WIRE VOICE GRADE EXTENDED LOOP/ 2 WIRE VOICE GRADE INTEROFFICE TRANSPORT (EEL)																
	2-WireVG Loop used with 2-wire VG Interoffice Transport Combination - Zone 1		1	UNCVX	UEAL2	16.56	108.76	35.47	72.94	10.86			20.35	21.09	9.80	10.54
	2-WireVG Loop used with 2-wire VG Interoffice Transport Combination - Zone 2		2	UNCVX	UEAL2	21.63	108.76	35.47	72.94	10.86			20.35	21.09	9.80	10.54
	2-WireVG Loop used with 2-wire VG Interoffice Transport Combination - Zone 3		3	UNCVX	UEAL2	28.28	108.76	35.47	72.94	10.86			20.35	21.09	9.80	10.54
	Interoffice Transport - Dedicated - 2-wire VG combination - Per Mile Per Month			UNCVX	1L5XX	0.0174										
	Interoffice Transport - Dedicated - 2- Wire Voice Grade combination - Facility Termination per month			UNCVX	U1TV2	21.79	79.83	44.08	69.32	31.00			20.35	21.09	9.80	10.54
	Nonrecurring Currently Combined Network Elements Switch -As-Is Charge			UNCVX	UNCCC		52.73	24.62	9.12	9.12			20.35	21.09	9.80	10.54
4-WIRE VOICE GRADE EXTENDED LOOP/ 4 WIRE VOICE GRADE INTEROFFICE TRANSPORT (EEL)																
	4-WireVG Loop used with 4-wire VG Interoffice Transport Combination - Zone 1		1	UNCVX	UEAL4	24.70	108.76	35.47	72.94	10.86			20.35	21.09	9.80	10.54
	4-WireVG Loop used with 4-wire VG Interoffice Transport Combination - Zone 2		2	UNCVX	UEAL4	32.26	108.76	35.47	72.94	10.86			20.35	21.09	9.80	10.54
	4-WireVG Loop used with 4-wire VG Interoffice Transport Combination - Zone 3		3	UNCVX	UEAL4	42.18	108.76	35.47	72.94	10.86			20.35	21.09	9.80	10.54
	Interoffice Transport - Dedicated - 4-wire VG combination - Per Mile Per Month			UNCVX	1L5XX	0.0174										
	Interoffice Transport - Dedicated - 4- Wire Voice Grade combination - Facility Termination per month			UNCVX	U1TV4	27.30	79.83	44.08	69.32	31.00			20.35	21.09	9.80	10.54
	Nonrecurring Currently Combined Network Elements Switch -As-Is Charge			UNCVX	UNCCC		52.73	24.62	9.12	9.12			20.35	21.09	9.80	10.54
DS3 DIGITAL EXTENDED LOOP WITH DEDICATED DS3 INTEROFFICE TRANSPORT (EEL)																
	High Capacity Unbundled Local Loop - DS3 combination - Per Mile per month			UNC3X	1L5ND	9.19										
	High Capacity Unbundled Local Loop - DS3 combination - Facility Termination per month			UNC3X	UE3PX	373.47	240.23	180.87	106.78	45.24			20.35	21.09	9.80	10.54
	Interoffice Transport - Dedicated - DS3 - Per Mile per month			UNC3X	1L5XX	2.34										
	Interoffice Transport - Dedicated - DS3 combination - Facility Termination per per month			UNC3X	U1TF3	854.97	482.01	153.81	64.43	35.43			20.35	21.09	9.80	10.54
	Nonrecurring Currently Combined Network Elements Switch -As-Is Charge			UNC3X	UNCCC		52.73	24.62	9.12	9.12			20.35	21.09	9.80	10.54
STS1 DIGITAL EXTENDED LOOP WITH DEDICATED STS1 INTEROFFICE TRANSPORT (EEL)																
	High Capacity Unbundled Local Loop - STS1 combination - Per Mile per month			UNCSX	1L5ND	9.19										
	High Capacity Unbundled Local Loop - STS1 combination - Facility Termination per month			UNCSX	UDLS1	394.56	240.23	180.87	106.78	45.24			20.35	21.09	9.80	10.54
	Interoffice Transport - Dedicated - STS1 combination - Per Mile per month			UNCSX	1L5XX	2.34										
	Interoffice Transport - Dedicated - STS1 combination - Facility Termination per month			UNCSX	U1TFS	849.30	482.01	153.81	64.43	35.43			20.35	21.09	9.80	10.54
	Nonrecurring Currently Combined Network Elements Switch -As-Is Charge			UNCSX	UNCCC		52.73	24.62	9.12	9.12			20.35	21.09	9.80	10.54
2-WIRE ISDN EXTENDED LOOP WITH DS1 INTEROFFICE TRANSPORT (EEL)																
	First 2-Wire ISDN Loop in a DS1 Interoffice Combination Transport - Zone 1		1	UNCNX	U1L2X	22.22	108.76	35.47	72.94	10.86			20.35	21.09	9.80	10.54
	First 2-Wire ISDN Loop in a DS1 Interoffice Combination Transport - Zone 2		2	UNCNX	U1L2X	29.02	108.76	35.47	72.94	10.86			20.35	21.09	9.80	10.54

CATEGORY		RATE ELEMENTS	Interim	Zone	BCS	USOC	RATES($)					Svc Order Submitted Elec per LSR	Svc Order Submitted Manually per LSR	Incremental Charge - Manual Svc Order vs. Electronic-1st	Incremental Charge - Manual Svc Order vs. Electronic-Add'l	Incremental Charge - Manual Svc Order vs. Electronic-Disc 1st	Incremental Charge - Manual Svc Order vs. Electronic-Disc Add'l
							Rec	Nonrecurring		Nonrecurring Disconnect		OSS Rates($)					
								First	Add'l	First	Add'l	SOMEC	SOMAN	SOMAN	SOMAN	SOMAN	SOMAN
		First 2-Wire ISDN Loop in a DS1 Interoffice Combination Transport - Zone 3		3	UNCNX	U1L2X	37.95	108.76	35.47	72.94	10.86			20.35	21.09	9.80	10.54
		Interoffice Transport - Dedicated - DS1 combination - Per Mile			UNC1X	1L5XX	0.3562										
		Interoffice Transport - Dedicated - DS1 combintion - Facility Termination per month			UNC1X	U1TF1	77.86	171.24	113.12	70.07	30.90			20.35	21.09	9.80	10.54
		Channelization - Channel System DS1 to DS0 combination - per month			UNC1X	MQ1	80.77	105.76	14.48	3.04	2.74			20.35	21.09	9.80	10.54
		2-wire ISDN COCI (BRITE) - DS1 to DS0 Channel System combination - per month			UNCNX	UC1CA	3.24	5.70	4.42					20.35	21.09	9.80	10.54
		Additional 2-wire ISDN Loop in same DS1Interoffice Transport Combination - Zone 1		1	UNCNX	U1L2X	22.22	108.76	35.47	72.94	10.86			20.35	21.09	9.80	10.54
		Additional 2-wire ISDN Loop in same DS1Interoffice Transport Combination - Zone 2		2	UNCNX	U1L2X	29.02	108.76	35.47	72.94	10.86			20.35	21.09	9.80	10.54
		Additional 2-wire ISDN Loop in same DS1Interoffice Transport Combination - Zone 3		3	UNCNX	U1L2X	37.95	108.76	35.47	72.94	10.86			20.35	21.09	9.80	10.54
		2-wire ISDN COCI (BRITE) - DS1 to DS0 Channel System combintaion- per month			UNCNX	UC1CA	3.24	5.70	4.42					20.35	21.09	9.80	10.54
		Nonrecurring Currently Combined Network Elements Switch -As-Is Charge			UNC1X	UNCCC		52.73	24.62	9.12	9.12			20.35	21.09	9.80	10.54
	4-WIRE DS1 DIGITAL EXTENDED LOOP WITH DEDICATED STS-1 INTEROFFICE TRANSPORT (EEL)																
		First DS1 Loop in STS1 Interoffice Transport Combination - Zone 1		1	UNC1X	USLXX	57.73	228.40	161.74	79.87	24.88			20.35	21.09	9.80	10.54
		First DS1 Loop in STS1 Interoffice Transport Combination - Zone 2		2	UNC1X	USLXX	75.40	228.40	161.74	79.87	24.88			20.35	21.09	9.80	10.54
		First DS1 Loop in STS1 Interoffice Transport Combination - Zone 3		3	UNC1X	USLXX	98.59	228.40	161.74	79.87	24.88			20.35	21.09	9.80	10.54
		Interoffice Transport - Dedicated - STS1 combination - Per Mile Per Month			UNCSX	1L5XX	2.34										
		Interoffice Transport - Dedicated - STS1 combination - Facility Termination			UNCSX	U1TFS	849.30	482.01	153.81	64.43	35.43			20.35	21.09	9.80	10.54
		STS1 to DS1 Channel System conbination per month			UNCSX	MQ3	222.98	156.02	49.41	17.12	6.77			20.35	21.09	9.80	10.54
		DS3 Interface Unit (DS1 COCI) combination per month			UNC1X	UC1D1	17.58	5.70	4.42					20.35	21.09	9.80	10.54
		Additional DS1Loop in STS1 Interoffice Transport Combination - Zone 1		1	UNC1X	USLXX	57.73	228.40	161.74	79.87	24.88			20.35	21.09	9.80	10.54
		Additional DS1Loop in STS1 Interoffice Transport Combination - Zone 2		2	UNC1X	USLXX	75.40	228.40	161.74	79.87	24.88			20.35	21.09	9.80	10.54
		Additional DS1Loop in STS1 Interoffice Transport Combination - Zone 3		3	UNC1X	USLXX	98.59	228.40	161.74	79.87	24.88			20.35	21.09	9.80	10.54
		DS3 Interface Unit (DS1 COCI) combination per month			UNC1X	UC1D1	17.58	5.70	4.42					20.35	21.09	9.80	10.54
		Nonrecurring Currently Combined Network Elements Switch -As-Is Charge			UNCSX	UNCCC		52.73	24.62	9.12	9.12			20.35	21.09	9.80	10.54
	4-WIRE 56 KBPS DIGITAL EXTENDED LOOP WITH 56 KBPS INTEROFFICE TRANSPORT (EEL)																
		4-wire 56 kbps Loop/4-wire 56 kbps Interoffice Transport Combination - Zone 1		1	UNCDX	UDL56	31.10	108.76	35.47	72.94	10.86			20.35	21.09	9.80	10.54
		4-wire 56 kbps Loop/4-wire 56 kbps Interoffice Transport Combination - Zone 2		2	UNCDX	UDL56	40.61	108.76	35.47	72.94	10.86			20.35	21.09	9.80	10.54
		4-wire 56 kbps Loop/4-wire 56 kbps Interoffice Transport Combination - Zone 3		3	UNCDX	UDL56	53.11	108.76	35.47	72.94	10.86			20.35	21.09	9.80	10.54
		Interoffice Transport - Dedicated - 4-wire 56 kbps combination - Per Mile			UNCDX	1L5XX	0.0174										
		Interoffice Transport - Dedicated - 4-wire 56 kbps combination - Facility Termination			UNCDX	U1TD5	21.19	79.83	44.08	69.32	31.00			20.35	21.09	9.80	10.54
		Nonrecurring Currently Combined Network Elements Switch -As-Is Charge			UNCDX	UNCCC		52.73	24.62	9.12	9.12			20.35	21.09	9.80	10.54
	4-WIRE 64 KBPS DIGITAL EXTENDED LOOP WITH 64 KBPS INTEROFFICE TRANSPORT (EEL)																
		4-wire 64 kbps Loop/4-wire 64 kbps Interoffice Transport Combination - Zone 1		1	UNCDX	UDL64	31.10	108.76	35.47	72.94	10.86			20.35	21.09	9.80	10.54
		4-wire 64 kbps Loop/4-wire 64 kbps Interoffice Transport Combination - Zone 2		2	UNCDX	UDL64	40.61	108.76	35.47	72.94	10.86			20.35	21.09	9.80	10.54

CATEGORY	RATE ELEMENTS	Interim	Zone	BCS	USOC	RATES($)					Svc Order Submitted Elec per LSR	Svc Order Submitted Manually per LSR	Incremental Charge - Manual Svc Order vs. Electronic-1st	Incremental Charge - Manual Svc Order vs. Electronic-Add'l	Incremental Charge - Manual Svc Order vs. Electronic-Disc 1st	Incremental Charge - Manual Svc Order vs. Electronic-Disc Add'l
						Rec	Nonrecurring		Nonrecurring Disconnect		OSS Rates($)					
							First	Add'l	First	Add'l	SOMEC	SOMAN	SOMAN	SOMAN	SOMAN	SOMAN
	4-wire 64 kbps Loop/4-wire 64 kbps Interoffice Transport Combination - Zone 3		3	UNCDX	UDL64	53.11	108.76	35.47	72.94	10.86			20.35	21.09	9.80	10.54
	Interoffice Transport - Dedicated - 4-wire 64 kbps combination - Per Mile			UNCDX	1L5XX	0.0174										
	Interoffice Transport - Dedicated - 4-wire 64 kbps combination - Facility Termination			UNCDX	U1TD6	21.19	79.83	44.08	69.32	31.00			20.35	21.09	9.80	10.54
	Nonrecurring Currently Combined Network Elements Switch -As-Is Charge			UNCDX	UNCCC		52.73	24.62	9.12	9.12			20.35	21.09	9.80	10.54
ADDITIONAL NETWORK ELEMENTS																
When used as a part of a currently combined facility, the non-recurrng charges do not apply, but a Switch As Is charge does apply.																
When used as ordinarilty combined network elements in Tennessee, the non-recurring charges apply and the Switch As Is Charge does not.																
Node (SynchroNet)																
Nonrecurring Currently Combined Network Elements "Switch As Is" Charge (One applies to each combination)																
	Nonrecurring Currently Combined Network Elements Switch -As-Is Charge - 2 wire/4-Wire VG			UNCVX	UNCCC		52.73	24.62	9.12	9.12			20.35	21.09	9.80	10.54
	Nonrecurring Currently Combined Network Elements Switch -As-Is Charge - 56/64 kbps			UNCDX	UNCCC		52.73	24.62	9.12	9.12			20.35	21.09	9.80	10.54
	Nonrecurring Currently Combined Network Elements Switch -As-Is Charge - DS1			UNC1X	UNCCC		52.73	24.62	9.12	9.12			20.35	21.09	9.80	10.54
	Nonrecurring Currently Combined Network Elements Switch -As-Is Charge - DS3			UNC3X	UNCCC		52.73	24.62	9.12	9.12			20.35	21.09	9.80	10.54
	Nonrecurring Currently Combined Network Elements Switch -As-Is Charge - STS1			UNCSX	UNCCC		52.73	24.62	9.12	9.12			20.35	21.09	9.80	10.54
NOTE: Local Channel - Dedicated Transport - minimum billing period - Below DS3=one month, DS3 and above=four months																
	Local Channel - Dedicated - 2-Wire Voice Grade Zone 1		1	UNCVX	ULDV2	17.18	108.76	35.47	72.94	10.86			20.35	21.09	9.80	10.54
	Local Channel - Dedicated - 2-Wire Voice Grade Zone 2		2	UNCVX	ULDV2	22.44	108.76	35.47	72.94	10.86			20.35	21.09	9.80	10.54
	Local Channel - Dedicated - 2-Wire Voice Grade Zone 3		3	UNCXV	ULDV2	29.34	108.76	35.47	72.94	10.86			20.35	21.09	9.80	10.54
	Local Channel - Dedicated - 4-Wire Voice Grade Zone 1		1	UNCVX	ULDV4	18.18	108.76	35.47	72.94	10.86			20.35	21.09	9.80	10.54
	Local Channel - Dedicated - 4-Wire Voice Grade Zone 2		2	UNCVX	ULDV4	23.74	108.76	35.47	72.94	10.86			20.35	21.09	9.80	10.54
	Local Channel - Dedicated - 4-Wire Voice Grade Zone 3			UNCXV	ULDV4	31.05	108.76	35.47	72.94	10.86			20.35	21.09	9.80	10.54
	Local Channel - Dedicated - DS1 per month Zone 1		1	UNC1X	ULDF1	36.24	228.40	161.74	79.87	24.88			20.35	21.09	9.80	10.54
	Local Channel - Dedicated -DS1 Per Month Zone 2		2	UNC1X	ULDF1	47.33	228.40	161.74	79.87	24.88			20.35	21.09	9.80	10.54
	Local Channel - Dedicated - DS1- Per Month Zone 3		3	UNC1X	ULDF1	61.89	228.40	161.74	79.87	24.88			20.35	21.09	9.80	10.54
	Local Channel - Dedicated - DS3 - Per Mile per month			UNC3X	1L5NC	7.15										
	Local Channel - Dedicated - DS3 - Facility Termination per month			UNC3X	ULDF3	611.30	595.37	304.50	215.82	151.15			20.35	21.09	9.80	10.54
	Local Channel - Dedicated - STS-1- Per Mile per month			UNCSX	1L5NC	7.15										
	Local Channel - Dedicated - STS-1 - Facility Termination per month			UNCSX	ULDFS	599.59	588.07	297.20	215.82	151.15			20.35	21.09	9.80	10.54
UNBUNDLED LOCAL EXCHANGE SWITCHING(PORTS)																
Exchange Ports																
NOTE: Although the Port Rate includes all available features in GA, KY, LA & TN, the desired features will need to be ordered using retail USOCs																
2-WIRE VOICE GRADE LINE PORT RATES (RES)																
	Exchange Ports - 2-Wire Analog Line Port- Res.			UEPSR	UEPRL	1.89	9.93	9.19	3.66	2.92			20.35	10.54	13.32	1.40
	Exchange Ports - 2-Wire Analog Line Port with Caller ID - Res.			UEPSR	UEPRC	1.89	9.93	9.19	3.66	2.92			20.35	10.54	13.32	1.40
	Exchange Ports - 2-Wire Analog Line Port outgoing only - Res.			UEPSR	UEPRO	1.89	9.93	9.19	3.66	2.92			20.35	10.54	13.32	1.40
	Exchange Ports - 2-Wire VG unbundled TN extended local dialing parity Port with Caller ID - Res.			UEPSR	UEPAQ	1.89	9.93	9.19	3.66	2.92			20.35	10.54	13.32	1.40
	Exchange Ports - 2-Wire VG unbundled Tennessee Area Plus with Caller ID - Res (AC7)			UEPSR	UEPAH	1.89	9.93	9.19	3.66	2.92			20.35	10.54	13.32	1.40
	Exchange Ports - 2-Wire VG unbundled Tennessee Area Calling port with Caller ID - Res (F2R)			UEPSR	UEPAK	1.89	9.93	9.19	3.66	2.92			20.35	10.54	13.32	1.40
	Exchange Ports - 2-Wire VG unbundled Tennessee Area Calling port with Caller ID - Res (TACER)			UEPSR	UEPAL	1.89	9.93	9.19	3.66	2.92			20.35	10.54	13.32	1.40
	Exchange Ports - 2-Wire VG unbundled Tennessee Area Calling port with Caller ID - Res (TACSR)			UEPSR	UEPAM	1.89	9.93	9.19	3.66	2.92			20.35	10.54	13.32	1.40

CATEGORY	RATE ELEMENTS	Interim	Zone	BCS	USOC	RATES($)					Svc Order Submitted Elec per LSR	Svc Order Submitted Manually per LSR	Incremental Charge - Manual Svc Order vs. Electronic-1st	Incremental Charge - Manual Svc Order vs. Electronic-Add'l	Incremental Charge - Manual Svc Order vs. Electronic-Disc 1st	Incremental Charge - Manual Svc Order vs. Electronic-Disc Add'l
						Rec	Nonrecurring First	Nonrecurring Add'l	Disconnect First	Disconnect Add'l	OSS Rates($) SOMEC	SOMAN	SOMAN	SOMAN	SOMAN	SOMAN
	Exchange Ports - 2-Wire VG unbundled Tennessee Area Calling port with Caller ID - Res (1MF2X)			UEPSR	UEPAN	1.89	9.93	9.19	3.66	2.92			20.35	10.54	13.32	1.40
	Exchange Ports - 2-Wire VG unbundled Tennessee Area Calling port with Caller ID - Res (2MR)			UEPSR	UEPAO	1.89	9.93	9.19	3.66	2.92			20.35	10.54	13.32	1.40
	Exchange Ports - 2-Wire VG unbundled res, low usage line port with Caller ID (LUM)			UEPSR	UEPAP	1.89	9.93	9.19	3.66	2.92			20.35	10.54	13.32	1.40
	Subsequent Activity			UEPSR	USASC	0.00	0.00	0.00					20.35	10.54	13.32	1.40
FEATURES																
	All Available Vertical Features			UEPSR	UEPVF	0.00	0.00	0.00					20.35	10.54	13.32	1.40
2-WIRE VOICE GRADE LINE PORT RATES (BUS)																
	Exchange Ports - 2-Wire Analog Line Port without Caller ID - Bus			UEPSB	UEPBL	1.89	9.93	9.19	3.66	2.92			20.35	10.54	13.32	1.40
	Exchange Ports - 2-Wire VG unbundled Line Port with unbundled port with Caller+E484 ID - Bus.			UEPSB	UEPBC	1.89	9.93	9.19	3.66	2.92			20.35	10.54	13.32	1.40
	Exchange Ports - 2-Wire Analog Line Port outgoing only - Bus.			UEPSB	UEPBO	1.89	9.93	9.19	3.66	2.92			20.35	10.54	13.32	1.40
	Exchange Ports - 2-Wire VG unbundled TN extended local dialing parity Port with Caller ID - Bus.			UEPSB	UEPAV	1.89	9.93	9.19	3.66	2.92			20.35	10.54	13.32	1.40
	Exhange Ports - 2-Wire VG unbundled incoming only port with Caller ID - Bus			UEPSB	UEPB1	1.89	9.93	9.19	3.66	2.92			20.35	10.54	13.32	1.40
	Exchange Ports - 2-Wire VG unbundled TN Bus 2-Way Area Calling Port Economy Option - Bus (TACC1)			UEPSB	UEPAC	1.89	9.93	9.19	3.66	2.92			20.35	10.54	13.32	1.40
	Exchange Ports - 2-Wire VG unbundled TN Bus 2-Way Area Calling Port Standard Option - Bus (TACC2)			UEPSB	UEPAD	1.89	9.93	9.19	3.66	2.92			20.35	10.54	13.32	1.40
	Exchange Ports - 2-W VG unbundled TN Bus 2-Way Collierville & Memphis Local Calling Port - Bus (B2F)			UEPSB	UEPAE	1.89	9.93	9.19	3.66	2.92			20.35	10.54	13.32	1.40
	Subsequent Activity			UEPSB	USASC	0.00	0.00	0.00					20.35	10.54	13.32	1.40
FEATURES																
	All Available Vertical Features			UEPSB	UEPVF	0.00	0.00	0.00					20.35	10.54	13.32	1.40
EXCHANGE PORT RATES (DID & PBX)																
	2-Wire VG Unbundled 2-Way PBX Trunk - Res			UEPSE	UEPRD	1.79	9.93	9.19	3.66	2.92			20.35	10.54	13.32	1.40
	2-Wire VG Line Side Unbundled 2-Way PBX Trunk - Bus			UEPSP	UEPPC	1.79	9.93	9.19	3.66	2.92			20.35	10.54	13.32	1.40
	2-Wire VG Line Side Unbundled Outward PBX Trunk - Bus			UEPSP	UEPPO	1.79	9.93	9.19	3.66	2.92			20.35	10.54	13.32	1.40
	2-Wire VG Line Side Unbundled Incoming PBX Trunk - Bus			UEPSP	UEPP1	1.79	9.93	9.19	3.66	2.92			20.35	10.54	13.32	1.40
	2-Wire Analog Long Distance Terminal PBX Trunk - Bus			UEPSP	UEPLD	1.79	9.93	9.19	3.66	2.92			20.35	10.54	13.32	1.40
	2-Wire Analog TN 2-Way Calling Plan PBX Trunk - Bus			UEPSP	UEPT2	1.79	9.93	9.19	3.66	2.92			20.35	10.54	13.32	1.40
	2-Wire TN Outward Calling Plan PBX Trunk - Bus			UEPSP	UEPTO	1.79	9.93	9.19	3.66	2.92			20.35	10.54	13.32	1.40
	2-Wire Voice Unbundled PBX LD Terminal Ports			UEPSP	UEPLD	1.79	9.93	9.19	3.66	2.92			20.35	10.54	13.32	1.40
	2-Wire Voice Unbundled 2-Way PBX Tennessee Calling Port			UEPSP	UEPT2	1.79	9.93	9.19	3.66	2.92			20.35	10.54	13.32	1.40
	2-Wire Voice Unbundled 1-Way Outgoing PBX Tennessee Calling Port			UEPSP	UEPTO	1.79	9.93	9.19	3.66	2.92			20.35	10.54	13.32	1.40
	2-Wire Vice Unbundled 2-Way PBX Usage Port			UEPSP	UEPXA	1.79	9.93	9.19	3.66	2.92			20.35	10.54	13.32	1.40
B.1.7	2-Wire Voice Unbundled PBX Toll Terminal Hotel Ports			UEPSP	UEPXB	1.79	9.93	9.19	3.66	2.92			20.35	10.54	13.32	1.40
B.1.7	2-Wire Voice Unbundled PBX LD DDD Terminals Port			UEPSP	UEPXC	1.79	9.93	9.19	3.66	2.92			20.35	10.54	13.32	1.40
B.1.7	2-Wire Voice Unbundled PBX LD Terminal Switchboard Port			UEPSP	UEPXD	1.79	9.93	9.19	3.66	2.92			20.35	10.54	13.32	1.40
B.1.7	2-Wire Voice Unbundled PBX LD Terminal Switchboard IDD Capable Port			UEPSP	UEPXE	1.79	9.93	9.19	3.66	2.92			20.35	10.54	13.32	1.40
B.1.7	2-Wire Voice Unbundled 2-Way PBX Hotel/Hospital Economy Administrative Calling Port			UEPSP	UEPXL	1.79	9.93	9.19	3.66	2.92			20.35	10.54	13.32	1.40
B.1.7	2-Wire Voice Unbundled 2-Way PBX Hotel/Hospital Economy Room Calling Port			UEPSP	UEPXM	1.79	9.93	9.19	3.66	2.92			20.35	10.54	13.32	1.40
B.1.7	2-W Voice Unbundled 1-Way Out PBX Hotel/Hospital Economy Administrative Calling Port TN Calling Port			UEPSP	UEPXN	1.79	9.93	9.19	3.66	2.92			20.35	10.54	13.32	1.40
B.1.7	2-Wire Voice Unbundled 1-Way Outgoing PBX Hotel/Hospital Discount Room Calling Port			UEPSP	UEPXO	1.79	9.93	9.19	3.66	2.92			20.35	10.54	13.32	1.40
B.1.7	2-Wire Voice Unbundled 1-Way Outgoing PBX Measured Port			UEPSP	UEPXS	1.79	9.93	9.19	3.66	2.92			20.35	10.54	13.32	1.40
B.1.7	2-Wire Voice Unbundled PBX Collierville and Memphis Calling Port			UEPSP	UEPXU	1.79	9.93	9.19	3.66	2.92			20.35	10.54	13.32	1.40

CATEGORY		RATE ELEMENTS	Interim	Zone	BCS	USOC	RATES($)					Svc Order Submitted Elec per LSR	Svc Order Submitted Manually per LSR	Incremental Charge - Manual Svc Order vs. Electronic-1st	Incremental Charge - Manual Svc Order vs. Electronic-Add'l	Incremental Charge - Manual Svc Order vs. Electronic-Disc 1st	Incremental Charge - Manual Svc Order vs. Electronic-Disc Add'l
							Rec	Nonrecurring		Nonrecurring Disconnect		OSS Rates($)					
								First	Add'l	First	Add'l	SOMEC	SOMAN	SOMAN	SOMAN	SOMAN	SOMAN
	B.1.7	2-Wire Voice Unbundled 2-Way PBX Tennessee RegionServ Calling Port			UEPSP	UEPXV	1.79	9.93	9.19	3.66	2.92			20.35	10.54	13.32	1.40
		Subsequent Activity			UEPSP	USASC	0.00	0.00	0.00					20.35	10.54	13.32	1.40
	FEATURES																
		All Available Vertical Features			UEPSP UEPSE	UEPVF	0.00	0.00	0.00					20.35	10.54	13.32	1.40
	EXCHANGE PORT RATES (COIN)																
		Exchange Ports - Coin Port					2.11	9.93	9.19	3.66	2.92			20.35	10.54	13.32	1.40
	NOTE: Transmission/usage charges associated with POTS circuit switched usage will also apply to circuit switched voice and/or circuit switched data transmission by B-Channels associated with 2-wire ISDN ports.																
	NOTE: Access to B Channel or D Channel Packet capabilities will be available only through BFR/New Business Request Process. Rates for the packet capabilities will be determined via the Bona Fide Request/New Business Request Process.																
UNBUNDLED LOCAL EXCHANGE SWITCHING(PORTS)																	
	EXCHANGE PORT RATES (DID & PBX)																
		Exchange Ports - 2-Wire DID Port			UEPEX	UEPP2	8.97	47.75	47.01	9.21	8.47			20.35	10.54	13.32	1.40
		Exchange Ports - DDITS Port - 4-Wire DS1 Port with DID capability			UEPDD	UEPDD	35.74	75.93	38.15	8.77	8.04			19.99	19.99	19.99	19.99
		Exchange Ports - 2-Wire ISDN Port (See Notes below.)			UEPTX UEPSX	U1PMA	16.26	30.23	29.49	4.10	4.10			41.43	42.17	9.80	9.80
	NOTE: Transmission/usage charges associated with POTS circuit switched usage will also apply to circuit switched voice and/or circuit switched data transmission by B-Channels associated with 2-wire ISDN ports.																
	NOTE: Access to B Channel or D Channel Packet capabilities will be available only through BFR/New Business Request Process. Rates for the packet capabilities will be determined via the Bona Fide Request/New Business Request Process.																
		Exchange Ports - 2-Wire ISDN Port -- Channel Profiles			UEPTX UEPSX	U1UMA	0.00	0.00	0.00								
		Exchange Ports - 4-Wire ISDN DS1 Port			UEPEX	UEPEX	75.04	148.66	147.18	38.46	36.98			40.69	42.17	9.07	10.54
UNBUNDLED LOCAL SWITCHING, PORT USAGE																	
	End Office Switching (Port Usage)																
		End Office Switching Function, Per MOU					0.0008041										
	Tandem Switching (Port Usage) (Local or Access Tandem)																
		Tandem Switching Function Per MOU					0.0009778										
	Common Transport																
		Common Transport - Per Mile, Per MOU					0.0000064										
		Common Transport - Facilities Termination Per MOU					0.0003871										
UNBUNDLED PORT/LOOP COMBINATIONS - COST BASED RATES																	
	Cost Based Rates are applied where BellSouth is required by FCC and/or State Commission rule to provide Unbundled Local Switching or Switch Ports.																
	Features shall apply to the Unbundled Port/Loop Combination - Cost Based Rate section in the same manner as they are applied to the Stand-Alone Unbundled Port section of this Rate Exhibit.																
	End Office and Tandem Switching Usage and Common Transport Usage rates in the Port section of this rate exhibit shall apply to all combinations of loop/port network elements except for UNE Coin Port/Loop Combinations.																
	For Georgia, Kentucky, Louisiana, Mississippi, South Carolina and Tennessee, the recurring UNE Port and Loop charges listed apply to Currently Combined and Not Currently Combined Combos. The first and additional Port nonrecurring charges apply to Not Currently Combined Combos for all states. In GA, KY, LA, MS, SC and TN these nonrecurring charges are commission ordered cost based rates and in AL, FL and NC these nonrecurring charges are Market Rates and are also listed in the Market Rate section. For Currently Combined Combos in all other states, the nonrecurring charges shall be those identified in the Nonrecurring - Currently Combined sections.																
	2-WIRE VOICE GRADE LOOP WITH 2-WIRE LINE PORT (RES)																
	UNE Port/Loop Combination Rates																
		2-Wire VG Loop/Port Combo - Zone 1		1			14.18										
		2-Wire VG Loop/Port Combo - Zone 2		2			18.01										
		2-Wire VG Loop/Port Combo - Zone 3		3			23.02										
	UNE Loop Rates																
		2-Wire Voice Grade Loop (SL1) - Zone 1		1	UEPRX	UEPLX	12.48										
		2-Wire Voice Grade Loop (SL1) - Zone 2		2	UEPRX	UEPLX	16.31										
		2-Wire Voice Grade Loop (SL1) - Zone 3		3	UEPRX	UEPLX	21.32										
	2-Wire Voice Grade Line Port Rates (Res)																
		2-Wire voice unbundled port - residence			UEPRX	UEPRL	1.70	22.14	15.25	8.45	3.91			30.89	7.03		
		2-Wire voice unbundled port with Caller ID - res			UEPRX	UEPRC	1.70	22.14	15.25	8.45	3.91			30.89	7.03		
		2-Wire voice unbundled port outgoing only - res			UEPRX	UEPRO	1.70	22.14	15.25	8.45	3.91			30.89	7.03		
		2-Wire voice Grade unbundled Tennessee extended local dialing parity port with Caller ID - res			UEPRX	UEPAQ	1.70	22.14	15.25	8.45	3.91			30.89	7.03		
		2-Wire voice unbundled Tennessee Area Plus with Caller ID - res (AC7)			UEPRX	UEPAH	1.70	22.14	15.25	8.45	3.91			30.89	7.03		
		2-Wire voice unbundled Tennessee Area Calling port with Caller ID - res (F2R)			UEPRX	UEPAK	1.70	22.14	15.25	8.45	3.91			30.89	7.03		
		2-Wire voice unbundled Tennessee Area Calling port with Caller ID - res (TACER)			UEPRX	UEPAL	1.70	22.14	15.25	8.45	3.91			30.89	7.03		
		2-Wire voice unbundled Tennessee Area Calling port with Caller ID - res (TACSR)			UEPRX	UEPAM	1.70	22.14	15.25	8.45	3.91			30.89	7.03		
		2-Wire voice unbundled Tennessee Area Calling port with Caller ID - res (1MF2X)			UEPRX	UEPAN	1.70	22.14	15.25	8.45	3.91			30.89	7.03		

CATEGORY	RATE ELEMENTS	Interim	Zone	BCS	USOC	RATES($) Rec	Nonrecurring First	Nonrecurring Add'l	Nonrecurring Disconnect First	Nonrecurring Disconnect Add'l	Svc Order Submitted Elec per LSR	Svc Order Submitted Manually per LSR	Incremental Charge - Manual Svc Order vs. Electronic-1st	Incremental Charge - Manual Svc Order vs. Electronic-Add'l	Incremental Charge - Manual Svc Order vs. Electronic-Disc 1st	Incremental Charge - Manual Svc Order vs. Electronic-Disc Add'l
											OSS Rates($)					
											SOMEC	SOMAN	SOMAN	SOMAN	SOMAN	SOMAN
	2-Wire voice unbundled Tennessee Area Calling port with Caller ID - res (2MR)			UEPRX	UEPAO	1.70	22.14	15.25	8.45	3.91			30.89	7.03		
	2-Wire voice unbundles res, low usage line port with Caller ID (LUM)			UEPRX	UEPAP	1.70	22.14	15.25	8.45	3.91			30.89	7.03		
FEATURES																
	All Features Offered			UEPRX	UEPVF	0.00	0.00	0.00					30.89	7.03		
LOCAL NUMBER PORTABILITY																
	Local Number Portability (1 per port)			UEPRX	LNPCX	0.35										
NONRECURRING CHARGES (NRCs) - CURRENTLY COMBINED																
	2-Wire Voice Grade Loop / Line Port Combination - Conversion - Switch-as-is			UEPRX	USAC2		1.03	0.29					30.89	7.03		
	2-Wire Voice Grade Loop / Line Port Combination - Conversion - Switch with change			UEPRX	USACC		1.03	0.29					30.89	7.03		
	2-Wire Voice Grade Loop / Line Port Combination - Conversion - Subsequent Database Update						0.76						7.97			
ADDITIONAL NRCs																
	2-Wire Voice Grade Loop/Line Port Combination - Subsequent Activity			UEPRX	USAS2	0.00	0.00	0.00					30.89	7.03		
2-WIRE VOICE GRADE LOOP WITH 2-WIRE LINE PORT (BUS)																
UNE Port/Loop Combination Rates																
	2-Wire VG Loop/Port Combo - Zone 1		1			14.18										
	2-Wire VG Loop/Port Combo - Zone 2		2			18.01										
	2-Wire VG Loop/Port Combo - Zone 3		3			23.02										
UNE Loop Rates																
	2-Wire Voice Grade Loop (SL1) - Zone 1		1	UEPBX	UEPLX	12.48										
	2-Wire Voice Grade Loop (SL1) - Zone 2		2	UEPBX	UEPLX	16.31										
	2-Wire Voice Grade Loop (SL1) - Zone 3		3	UEPBX	UEPLX	21.32										
2-Wire Voice Grade Line Port (Bus)																
	2-Wire voice unbundled port without Caller ID - bus			UEPBX	UEPBL	1.70	22.14	15.25	8.45	3.91			30.89	7.03		
	2-Wire voice unbundled port with Caller + E484 ID - bus			UEPBX	UEPBC	1.70	22.14	15.25	8.45	3.91			30.89	7.03		
	2-Wire voice unbundled port outgoing only - bus			UEPBX	UEPBO	1.70	22.14	15.25	8.45	3.91			30.89	7.03		
	2-Wire voice Grade unbundled Tennessee extended local dialing parity port with Caller ID - bus			UEPBX	UEPAV	1.70	22.14	15.25	8.45	3.91			30.89	7.03		
	2-Wire voice unbundled incoming only port with Caller ID - Bus			UEPBX	UPEB1	1.70	22.14	15.25	8.45	3.91			30.89	7.03		
	2-Wire voice unbundled Tennessee Bus 2-Way Area Calling Port Economy Option (TACC1)			UEPBX	UEPAC	1.70	22.14	15.25	8.45	3.91			30.89	7.03		
	2-Wire voice unbundled Tennessee Bus 2-Way Area Calling Port Standard Option (TACC2)			UEPBX	UEPAD	1.70	22.14	15.25	8.45	3.91			30.89	7.03		
	2-Wire voice unbundled Tennessee Bus 2-Way Collierville and Memphis Local Calling Port (B2F)			UEPBX	UEPAE	1.70	22.14	15.25	8.45	3.91			30.89	7.03		
LOCAL NUMBER PORTABILITY																
	Local Number Portability (1 per port)			UEPBX	LNPCX	0.35										
FEATURES																
	All Features Offered			UEPBX	UEPVF	0.00	0.00	0.00					30.89	7.03		
NONRECURRING CHARGES (NRCs) - CURRENTLY COMBINED																
	2-Wire Voice Grade Loop / Line Port Combination - Conversion - Switch-as-is			UEPBX	USAC2		1.03	0.29					30.89	7.03		
	2-Wire Voice Grade Loop / Line Port Combination - Conversion - Switch with change			UEPBX	USACC		1.03	0.29					30.89	7.03		
	2-Wire Voice Grade Loop / Line Port Combination - Conversion - Subsequent Database Update						0.76						7.97			
ADDITIONAL NRCs																
	2-Wire Voice Grade Loop/Line Port Combination - Subsequent Activity			UEPBX	USAS2	0.00	0.00	0.00					30.89	7.03		
2-WIRE VOICE GRADE LOOP WITH 2-WIRE LINE PORT (RES - PBX)																
UNE Port/Loop Combination Rates																
	2-Wire VG Loop/Port Combo - Zone 1		1			14.18										
	2-Wire VG Loop/Port Combo - Zone 2		2			18.01										
	2-Wire VG Loop/Port Combo - Zone 3		3			23.02										

CATEGORY	RATE ELEMENTS	Interim	Zone	BCS	USOC	RATES($) Rec	Nonrecurring First	Nonrecurring Add'l	Nonrecurring Disconnect First	Nonrecurring Disconnect Add'l	Svc Order Submitted Elec per LSR	Svc Order Submitted Manually per LSR	Incremental Charge - Manual Svc Order vs. Electronic-1st	Incremental Charge - Manual Svc Order vs. Electronic-Add'l	Incremental Charge - Manual Svc Order vs. Electronic-Disc 1st	Incremental Charge - Manual Svc Order vs. Electronic-Disc Add'l
											OSS Rates($)					
											SOMEC	SOMAN	SOMAN	SOMAN	SOMAN	SOMAN
	2-Wire Voice Grade Loop (SL 1) - Zone 1		1	UEPRG	UEPLX	12.48										
	2-Wire Voice Grade Loop (SL 1) - Zone 2		2	UEPRG	UEPLX	16.31										
	2-Wire Voice Grade Loop (SL 1) - Zone 3		3	UEPRG	UEPLX	21.32										
2-Wire Voice Grade Line Port Rates (RES - PBX)																
	2-Wire VG Unbundled Combination 2-Way PBX Trunk Port - Res			UEPRG	UEPRD	1.70	22.14	15.25	8.45	3.91			30.89	7.03		
LOCAL NUMBER PORTABILITY																
	Local Number Portability (1 per port)			UEPRG	LNPCP	3.15	0.00	0.00					30.89	7.03		
FEATURES																
	All Features Offered			UEPRG	UEPVF	0.00	0.00	0.00					30.89	7.03		
NONRECURRING CHARGES (NRCs) - CURRENTLY COMBINED																
	2-Wire Voice Grade Loop/ Line Port Combination (PBX) - Conversion - Switch-As-Is			UEPRG	USAC2		1.03	0.29					30.89	7.03		
	2-Wire Voice Grade Loop/ Line Port Combination (PBX) - Conversion - Switch with Change			UEPRG	USACC		1.03	0.29					30.89	7.03		
	2-Wire Voice Grade Loop / Line Port Combination - Conversion - Subsequent Database Update						0.76						7.97			
ADDITIONAL NRCs																
	2-Wire Voice Grade Loop/ Line Port Combination (PBX) - Subsequent Activity			UEPRG	USAS2	0.00	0.00	0.00					30.89	7.03		
	PBX Subsequent Activity - Change/Rearrange Multiline Hunt Group						14.64	14.64					30.89	7.03		
2-WIRE VOICE GRADE LOOP WITH 2-WIRE LINE PORT (BUS - PBX)																
UNE Port/Loop Combination Rates																
	2-Wire VG Loop/Port Combo - Zone 1		1			14.18										
	2-Wire VG Loop/Port Combo - Zone 2		2			18.01										
	2-Wire VG Loop/Port Combo - Zone 3		3			23.02										
UNE Loop Rates																
	2-Wire Voice Grade Loop (SL 1) - Zone 1		1	UEPPX	UEPLX	12.48										
	2-Wire Voice Grade Loop (SL 1) - Zone 2		2	UEPPX	UEPLX	16.31										
	2-Wire Voice Grade Loop (SL 1) - Zone 3		3	UEPPX	UEPLX	21.32										
2-Wire Voice Grade Line Port Rates (BUS - PBX)																
	Line Side Unbundled Combination 2-Way PBX Trunk Port - Bus			UEPPX	UEPPC	1.70	22.14	15.25	8.45	3.91			30.89	7.03		
	Line Side Unbundled Outward PBX Trunk Port - Bus			UEPPX	UEPPO	1.70	22.14	15.25	8.45	3.91			30.89	7.03		
	Line Side Unbundled Incoming PBX Trunk Port - Bus			UEPPX	UEPP1	1.70	22.14	15.25	8.45	3.91			30.89	7.03		
	2-Wire Voice Unbundled PBX LD Terminal Ports			UEPPX	UEPLD	1.70	22.14	15.25	8.45	3.91			30.89	7.03		
	2-Wire Voice Unbundled 2-Way Combination PBX Tennessee Calling Port			UEPPX	UEPT2	1.70	22.14	15.25	8.45	3.91			30.89	7.03		
	2-Wire Voice Unbundled 1-Way Outgoing PBX Tennessee Calling Port			UEPPX	UEPTO	1.70	22.14	15.25	8.45	3.91			30.89	7.03		
	2-Wire Voice Unbundled 2-Way Combination PBX Usage Port			UEPPX	UEPXA	1.70	22.14	15.25	8.45	3.91			30.89	7.03		
	2-Wire Voice Unbundled PBX Toll Terminal Hotel Ports			UEPPX	UEPXB	1.70	22.14	15.25	8.45	3.91			30.89	7.03		
	2-Wire Voice Unbundled PBX LD DDD Terminals Port			UEPPX	UEPXC	1.70	22.14	15.25	8.45	3.91			30.89	7.03		
	2-Wire Voice Unbundled PBX LD Terminal Switchboard Port			UEPPX	UEPXD	1.70	22.14	15.25	8.45	3.91			30.89	7.03		
	2-Wire Voice Unbundled PBX LD Terminal Switchboard IDD Capable Port			UEPPX	UEPXE	1.70	22.14	15.25	8.45	3.91			30.89	7.03		
	2-Wire Voice Unbundled 2-Way PBX Hotel/Hospital Economy Administrative Calling Port			UEPPX	UEPXL	1.70	22.14	15.25	8.45	3.91			30.89	7.03		
	2-Wire Voice Unbundled 2-Way PBX Hotel/Hospital Economy Room Calling Port			UEPPX	UEPXM	1.70	22.14	15.25	8.45	3.91			30.89	7.03		
	2-Wire Voice Unbundled 1W Out PBX Hotel/Hospital Economy Administrative Calling Port TN Calling Port			UEPPX	UEPXN	1.70	22.14	15.25	8.45	3.91			30.89	7.03		
	2-Wire Voice Unbundled 1-Way Outgoing PBX Hotel/Hospital Discount Room Calling Port			UEPPX	UEPXO	1.70	22.14	15.25	8.45	3.91			30.89	7.03		
	2-Wire Voice Unbundled 1-Way Outgoing PBX Measured Port			UEPPX	UEPXS	1.70	22.14	15.25	8.45	3.91			30.89	7.03		
	2-Wire Voice Unbundled PBX Collierville and Memphis Calling Port			UEPPX	UEPXU	1.70	22.14	15.25	8.45	3.91			30.89	7.03		

CATEGORY	RATE ELEMENTS	Interim	Zone	BCS	USOC	RATES($) Rec	Nonrecurring First	Nonrecurring Add'l	Nonrecurring Disconnect First	Nonrecurring Disconnect Add'l	Svc Order Submitted Elec per LSR	Svc Order Submitted Manually per LSR	Incremental Charge - Manual Svc Order vs. Electronic-1st	Incremental Charge - Manual Svc Order vs. Electronic-Add'l	Incremental Charge - Manual Svc Order vs. Electronic-Disc 1st	Incremental Charge - Manual Svc Order vs. Electronic-Disc Add'l
											OSS Rates($)					
											SOMEC	SOMAN	SOMAN	SOMAN	SOMAN	SOMAN
	2-Wire Voice Unbundled 2-Way PBX Tennessee RegionServ Callling Port			UEPPX	UEPXV	1.70	22.14	15.25	8.45	3.91			30.89	7.03		
LOCAL NUMBER PORTABILITY																
	Local Number Portability (1 per port)			UEPPX	LNPCP	3.15	0.00	0.00					30.89	7.03		
FEATURES																
	All Features Offered			UEPPX	UEPVF	0.00	0.00	0.00					30.89	7.03		
NONRECURRING CHARGES (NRCs) - CURRENTLY COMBINED																
	2-Wire Voice Grade Loop/ Line Port Combination (PBX) - Conversion - Switch-As-Is			UEPPX	USAC2		1.03	0.29					30.89	7.03		
	2-Wire Voice Grade Loop/ Line Port Combination (PBX) - Conversion - Switch with Change			UEPPX	USACC		1.03	0.29					30.89	7.03		
	2-Wire Voice Grade Loop / Line Port Combination - Conversion - Subsequent Database Update						0.76						7.97			
ADDITIONAL NRCs																
	2-Wire Voice Grade Loop/ Line Port Combination (PBX) - Subsequent Activity			UEPPX	USAS2	0.00	0.00	0.00					30.89	7.03		
	PBX Subsequent Activity - Change/Rearrange Multiline Hunt Group						14.64	14.64					30.89	7.03		
UNE Port/Loop Combination Rates																
	2-Wire VG Coin Port/Loop Combo – Zone 1		1			14.18										
	2-Wire VG Coin Port/Loop Combo – Zone 2		2			18.01										
	2-Wire VG Coin Port/Loop Combo – Zone 3		3			23.02										
UNE Loop Rates																
	2-Wire Voice Grade Loop (SL1) - Zone 1		1	UEPCO	UEPLX	12.48										
	2-Wire Voice Grade Loop (SL1) - Zone 2		2	UEPCO	UEPLX	16.31										
	2-Wire Voice Grade Loop (SL1) - Zone 3		3	UEPCO	UEPLX	21.32										
2-Wire Voice Grade Line Ports (COIN)																
	2-Wire Coin 2-Way without Operator Screening and without Blocking (TN)			UEPCO	UEPTB	1.70	22.14	15.25	8.45	3.91			30.89	7.03		
	2-Wire Coin 2-Way with Operator Screening and Blocking: 011, 900/976, 1+DDD (NC, TN)			UEPCO	UEPRP	1.70	22.14	15.25	8.45	3.91			30.89	7.03		
	2-Wire Coin 2-Way with Operator Screening and 011 Blocking (TN)			UEPCO	UEPTA	1.70	22.14	15.25	8.45	3.91			30.89	7.03		
	2-Wire Coin 2-Way with Operator Screening: 900 Blocking: 900/976, 1+DDD, 011+, and Local (NC, TN)			UEPCO	UEPCA	1.70	22.14	15.25	8.45	3.91			30.89	7.03		
	2-Wire Coin Outward with Operator Screening and 011 Blocking (TN)			UEPCO	UEPTC	1.70	22.14	15.25	8.45	3.91			30.89	7.03		
	2-Wire Coin Outward with Operator Screening and Blocking: 900/976, 1+DDD, 011+, and Local (TN)			UEPCO	UEPOT	1.70	22.14	15.25	8.45	3.91			30.89	7.03		
	2-Wire 2-Way Smartline with 900/976 (all states except LA)			UEPCO	UEPCK	1.88							30.89	7.03		
	2-Wire Coin Outward Smartline with 900/976 (all states except LA)			UEPCO	UEPCR	1.88							30.89	7.03		
ADDITIONAL UNE COIN PORT/LOOP (RC)																
	UNE Coin Port/Loop Combo Usage (Flat Rate)			UEPCO	URECU	3.45	0.00	0.00					30.89	7.03		
	Local Number Portability (1 per port)			UEPCO	LNPCX	0.35										
	2-Wire Voice Grade Loop / Line Port Combination - Conversion - Switch-as-is			UEPCO	USAC2		1.03	0.29					30.89	7.03		
	2-Wire Voice Grade Loop / Line Port Combination - Conversion - Switch with change			UEPCO	USACC		1.03	0.29					30.89	7.03		
	2-Wire Voice Grade Loop/Line Port Combination - Subsequent Activity			UEPCO	USAS2	0.00	0.00	0.00					30.89	7.03		
UNBUNDLED REMOTE CALL FORWARDING - RES																
Non-Recurring																
UNBUNDLED REMOTE CALL FORWARDING - Bus																
	Unbundled Remote Call Forwarding, InterState/Intra LATA-Bus			UEPVB	UEPVJ	1.89	9.93	9.19	3.66	2.92			20.35	10.54	13.32	1.40
Non-Recurring																
2-WIRE VOICE LOOP/ 2WIRE VOICE GRADE IO TRANSPORT/ 2-WIRE LINE PORT (RES)																
2-WIRE VOICE LOOP/ 2WIRE VOICE GRADE IO TRANSPORT/ 2-WIRE LINE PORT (BUS)																
	2-Wire voice unbundled incoming only port with Caller ID - Bus			UEPFB	UEPB1	1.89	84.99	57.39	32.36	20.56			30.89	7.03		

CATEGORY	RATE ELEMENTS	Interim	Zone	BCS	USOC	RATES($) Rec	Nonrecurring First	Nonrecurring Add'l	Nonrecurring Disconnect First	Nonrecurring Disconnect Add'l	Svc Order Submitted Elec per LSR	Svc Order Submitted Manually per LSR	Incremental Charge - Manual Svc Order vs. Electronic-1st	Incremental Charge - Manual Svc Order vs. Electronic-Add'l	Incremental Charge - Manual Svc Order vs. Electronic-Disc 1st	Incremental Charge - Manual Svc Order vs. Electronic-Disc Add'l
											OSS Rates($)					
											SOMEC	SOMAN	SOMAN	SOMAN	SOMAN	SOMAN
	2-Wire Voice Unbundled 1-Way Outgoing PBX Measured Port			UEPFP	UEPXS	1.79	106.40	63.08	42.67	18.54			30.89	7.03		
UNBUNDLED PORT/LOOP COMBINATIONS - COST BASED RATES																
2-WIRE VOICE GRADE LOOP- BUS ONLY - WITH 2-WIRE DID TRUNK PORT																
UNE Port/Loop Combination Rates																
	2-Wire VG Loop/2-Wire DID Trunk Port Combo - UNE Zone 1		1			18.38										
	2-Wire VG Loop/2-Wire DID Trunk Port Combo - UNE Zone 2		2			19.87										
	2-Wire VG Loop/2-Wire DID Trunk Port Combo - UNE Zone 3		3			24.78										
	2-Wire Analog Voice Grade Loop - (SL2) - UNE Zone 1		1	UEPPX	UECD1	9.60										
	2-Wire Analog Voice Grade Loop - (SL2) - UNE Zone 2		2	UEPPX	UECD1	11.09										
	2-Wire Analog Voice Grade Loop - (SL2) - UNE Zone 3		3	UEPPX	UECD1	16.00										
	Exchange Ports - 2-Wire DID Port			UEPPX	UEPD1	8.78	45.44	29.94	8.45	3.91			30.89	7.03		
NONRECURRING CHARGES - CURRENTLY COMBINED																
	2-Wire Voice Grade Loop / 2-Wire DID Trunk Port Combination - Switch-as-is			UEPPX	USAC1		8.76	5.75					30.89	7.03		
	2-Wire Voice Grade Loop / 2-Wire DID Trunk Port Conversion with BellSouth Allowable Changes			UEPPX	USA1C		8.76	5.75					30.89	7.03		
Telephone Number/Trunk Group Establisment Charges																
	DID Trunk Termination (One Per Port)			UEPPX	NDT	0.00	0.00	0.00								
	Additional DID Numbers for each Group of 20 DID Numbers			UEPPX	ND4	0.00	0.00	0.00								
	DID Numbers, Non- consecutive DID Numbers , Per Number			UEPPX	ND5	0.00	0.00	0.00								
	Reserve Non-Consecutive DID numbers			UEPPX	ND6	0.00	0.00	0.00								
	Reserve DID Numbers			UEPPX	NDV	0.00	0.00	0.00								
LOCAL NUMBER PORTABILITY																
	Local Number Portability (1 per port)			UEPPX	LNPCP	3.15	0.00	0.00								
2-WIRE ISDN DIGITAL GRADE LOOP WITH 2-WIRE ISDN DIGITAL LINE SIDE PORT																
UNE Port/Loop Combination Rates																
	2W ISDN Digital Grade Loop/2W ISDN Digital Line Side Port - UNE Zone 1		1	UEPPB UEPPR		32.27										
	2W ISDN Digital Grade Loop/2W ISDN Digital Line Side Port - UNE Zone 2		2	UEPPB UEPPR		34.78										
	2W ISDN Digital Grade Loop/2W ISDN Digital Line Side Port - UNE Zone 3		3	UEPPB UEPPR		44.32										
	2-Wire ISDN Digital Grade Loop - UNE Zone 1		1	UEPPB UEPPR	USL2X	16.20										
	2-Wire ISDN Digital Grade Loop - UNE Zone 2		2	UEPPB UEPPR	USL2X	18.71										
	2-Wire ISDN Digital Grade Loop - UNE Zone 3		3	UEPPB UEPPR	USL2X	28.25										
	Exchange Port - 2-Wire ISDN Line Side Port			UEPPB UEPPR	UEPPB	16.07	141.75	118.37	49.20	43.26			19.99	19.99		
NONRECURRING CHARGES - CURRENTLY COMBINED																
	2-Wire ISDN Digital Grade Loop / 2-Wire ISDN Line Side Port Combination - Conversion			UEPPB UEPPR	USACB	0.00	117.23	117.23					19.99	19.99		
ADDITIONAL NRCs																
	2-Wire ISDN Loop / 2-Wire ISDN Port Combination - Sub Actvy - Non Feature/Add Trunk			UEPPB UEPPR	USASB		212.88						19.99	19.99		
LOCAL NUMBER PORTABILITY																
	Local Number Portability (1 per port)			UEPPB UEPPR	LNPCX	0.35	0.00	0.00								
B-CHANNEL USER PROFILE ACCESS:																
	CVS/CSD (DMS/5ESS)			UEPPB UEPPR	U1UCA	0.00	0.00	0.00								
	CVS (EWSD)			UEPPB UEPPR	U1UCB	0.00	0.00	0.00								
	CSD			UEPPB UEPPR	U1UCC	0.00	0.00	0.00								
B-CHANNEL AREA PLUS USER PROFILE ACCESS: (AL,KY,LA,MS SC,MS, & TN)																
	CVS/CSD (DMS/5ESS)			UEPPB UEPPR	U1UCD	0.00	0.00	0.00								
	CVS (EWSD)			UEPPB UEPPR	U1UCE	0.00	0.00	0.00								
	CSD			UEPPB UEPPR	U1UCF	0.00	0.00	0.00								
USER TERMINAL PROFILE																
	User Terminal Profile (EWSD only)			UEPPB UEPPR	U1UMA	0.00	0.00	0.00								
VERTICAL FEATURES																
	All Vertical Features - One per Channel B User Profile			UEPPB UEPPR	UEPVF	0.00	0.00	0.00								
	Interoffice Channel mileage each, including first mile and facilities termination			UEPPB UEPPR	M1GNC	17.91	53.99	17.37					19.99	19.99		

CATEGORY	RATE ELEMENTS	Interim	Zone	BCS	USOC	RATES($) Rec	Nonrecurring First	Nonrecurring Add'l	Nonrecurring Disconnect First	Nonrecurring Disconnect Add'l	Svc Order Submitted Elec per LSR	Svc Order Submitted Manually per LSR	Incremental Charge - Manual Svc Order vs. Electronic-1st	Incremental Charge - Manual Svc Order vs. Electronic-Add'l	Incremental Charge - Manual Svc Order vs. Electronic-Disc 1st	Incremental Charge - Manual Svc Order vs. Electronic-Disc Add'l
											OSS Rates($)					
											SOMEC	SOMAN	SOMAN	SOMAN	SOMAN	SOMAN
	Interoffice Channel mileage each, additional mile			UEPPB UEPPR	M1GNM	0.173	0.00	0.00								
	4-WIRE DS1 DIGITAL LOOP WITH 4-WIRE ISDN DS1 DIGITAL TRUNK PORT															
	UNE Port/Loop Combination Rates															
	4W DS1 Digital Loop/4W ISDN DS1 Digital Trunk Port - UNE Zone 1		1	UEPPP		132.58										
	4W DS1 Digital Loop/4W ISDN DS1 Digital Trunk Port - UNE Zone 2		2	UEPPP		150.25										
	4W DS1 Digital Loop/4W ISDN DS1 Digital Trunk Port - UNE Zone 3		3	UEPPP		173.44										
	4-Wire DS1 Digital Loop - UNE Zone 1		1	UEPPP	USL4P	57.73										
	4-Wire DS1 Digital Loop - UNE Zone 2		2	UEPPP	USL4P	75.40										
	4-Wire DS1 Digital Loop - UNE Zone 3		3	UEPPP	USL4P	98.59										
	Exchange Ports - 4-Wire ISDN DS1 Port			UEPPP	UEPPP	74.85	415.53	366.90	89.28	77.43			19.99	19.99		
	NONRECURRING CHARGES - CURRENTLY COMBINED															
	4-Wire DS1 Digital Loop / 4-Wire ISDN DS1 Digital Trunk Port Combination - Conversion -Switch-as-is			UEPPP	USACP	0.00	328.53	328.53					19.99	19.99		
	ADDITIONAL NRCs															
	4-Wire DS1 Loop/4-W ISDN Digtl Trk Port - Subsqt Actvy-Inward/two way tel nos within Std Allowance (except NC)			UEPPP	PR7TF		0.94						19.99	19.99		
	4-Wire DS1 Loop / 4-Wire ISDN DS1 Digital Trunk Port - Outward Tel Numbers (All States except NC)			UEPPP	PR7TO		22.36	22.36					19.99	19.99		
	4-Wire DS1 Loop / 4-Wire ISDN DS1 Digital Trk Port - Subsequent Inward Tel Nos Above Std Allowance			UEPPP	PR7ZT		44.71	44.70					19.99	19.99		
	LOCAL NUMBER PORTABILITY															
	Local Number Portability (1 per port)			UEPPP	LNPCN	1.75										
	INTERFACE (Provsioning Only)															
	Voice/Data			UEPPP	PR71V	0.00	0.00	0.00								
	Digital Data			UEPPP	PR71D	0.00	0.00	0.00								
	Inward Data			UEPPP	PR71E	0.00	0.00	0.00								
	New or Additional "B" Channel															
	New or Additional - Voice/Data B Channel			UEPPP	PR7BV	0.00	28.39						19.99	19.99		
	New or Additional - Digital Data B Channel			UEPPP	PR7BF	0.00	29.11						19.99	19.99		
	New or Additional Inward Data B Channel			UEPPP	PR7BD	0.00	29.39						19.99	19.99		
	CALL TYPES															
	Inward			UEPPP	PR7C1	0.00	0.00	0.00								
	Outward			UEPPP	PR7C0	0.00	0.00	0.00								
	Two-way			UEPPP	PR7CC	0.00	0.00	0.00								
	Interoffice Channel Mileage															
	Fixed Each Including First Mile			UEPPP	1LN1A	76.1825	145.98	109.85	19.55				19.99	19.99		
	Each Airline-Fractional Additional Mile			UEPPP	1LN1B	0.3525										
	4-WIRE DS1 DIGITAL LOOP WITH 4-WIRE DDITS TRUNK PORT															
	UNE Port/Loop Combination Rates															
	4W DS1 Digital Loop/4W DDITS Trunk Port - UNE Zone 1		1	UEPDC		93.28							19.99	19.99		
	4W DS1 Digital Loop/4W DDITS Trunk Port - UNE Zone 2		2	UEPDC		110.95							19.99	19.99		
	4W DS1 Digital Loop/4W DDITS Trunk Port - UNE Zone 3		3	UEPDC		134.14							19.99	19.99		
	4-Wire DS1 Digital Loop - UNE Zone 1		1	UEPDC	USLDC	57.53										
	4-Wire DS1 Digital Loop - UNE Zone 2		2	UEPDC	USLDC	75.40										
	4-Wire DS1 Digital Loop - UNE Zone 3		3	UEPDC	USLDC	98.59										
	4-Wire DDITS Digital Trunk Port			UEPDC	UDD1T	35.55	342.80	257.87	61.41	48.49			19.99	19.99		
	NONRECURRING CHARGES - CURRENTLY COMBINED															
	4-Wire DS1 Digital Loop / 4-Wire DDITS Trunk Port Combination - Switch-as-is			UEPDC	USAC4		312.91	312.91					19.99	19.99		
	4-Wire DS1 Digital Loop / 4-Wire DDITS Trunk Port Combination - Conversion with DS1 Changes			UEPDC	USAWA		312.91	312.91					19.99	19.99		
	4-Wire DS1 Digital Loop / 4-Wire DDITS Trunk Port Combination - Conversion with Change - Trunk			UEPDC	USAWB		312.91	312.91					19.99	19.99		
	ADDITIONAL NRCs															
	4-Wire DS1 Loop / 4-Wire DDITS Trunk Port - Subsequent Service Activity Per Service Order			UEPDC	USAS4		94.88	94.88								

CATEGORY	RATE ELEMENTS	Interim	Zone	BCS	USOC	RATES($) Rec	Nonrecurring First	Nonrecurring Add'l	Nonrecurring Disconnect First	Nonrecurring Disconnect Add'l	Svc Order Submitted Elec per LSR	Svc Order Submitted Manually per LSR	Incremental Charge - Manual Svc Order vs. Electronic-1st	Incremental Charge - Manual Svc Order vs. Electronic-Add'l	Incremental Charge - Manual Svc Order vs. Electronic-Disc 1st	Incremental Charge - Manual Svc Order vs. Electronic-Disc Add'l
											OSS Rates($)					
											SOMEC	SOMAN	SOMAN	SOMAN	SOMAN	SOMAN
	4-Wire DS1 Loop / 4-Wire DDITS Trunk Port - NRC - Subsequent Channel Activation/Chan - 2-Way Trunk			UEPDC	UDTTA		108.67	108.67					19.99	19.99		
	4-Wire DS1 Loop / 4-Wire DDITS Trunk Port - Subsequent Channel Activation/Chan - 1-Way Outward Trunk			UEPDC	UDTTB		108.67	108.67					19.99	19.99		
	4-Wire DS1 Loop / 4-Wire DDITS Trunk Port - Subsqnt Channel Activation/Chan Inward Trunk w/out DID			UEPDC	UDTTC		108.67	108.67					19.99	19.99		
	4-Wire DS1 Loop / 4-Wire DDITS Trunk Port - Subsqnt Chan Activation Per Chan - Inward Trunk with DID			UEPDC	UDTTD		108.67	108.67					19.99	19.99		
	4-Wire DS1 Loop / 4-Wire DDITS Trunk Port - Subsqnt Chan Activation / Chan - 2-Way DID w User Trans			UEPDC	UDTTE		108.67	108.67					19.99	19.99		
BIPOLAR 8 ZERO SUBSTITUTION																
	B8ZS -Superframe Format			UEPDC	CCOSF		0.00	590.00					19.99	19.99		
	B8ZS - Extended Superframe Format			UEPDC	CCOEF		0.00	590.00					19.99	19.99		
Alternate Mark Inversion																
	AMI -Superframe Format			UEPDC	MCOSF		0.00	0.00								
	AMI - Extended SuperFrame Format			UEPDC	MCOPO		0.00	0.00								
Telephone Number/Trunk Group Establisment Charges																
	Telephone Number for 2-Way Trunk Group			UEPDC	UDTGX	0.00							19.99	19.99		
	Telephone Number for 1-Way Outward Trunk Group			UEPDC	UDTGY	0.00							19.99	19.99		
	Telephone Number for 1-Way Inward Trunk Group Without DID			UEPDC	UDTGZ	0.00							19.99	19.99		
	DID Numbers for each Group of 20 DID Numbers			UEPDC	ND4	0.00							19.99	19.99		
	DID Numbers, Non- consecutive DID Numbers , Per Number			UEPDC	ND5	0.00							19.99	19.99		
	Reserve Non-Consecutive DID Nos.			UEPDC	ND6	0.00	0.00	0.00								
	Reserve DID Numbers			UEPDC	NDV	0.00	0.00	0.00								
Dedicated DS1 (Interoffice Channel Mileage) - FX/FCO for 4-Wire DS1 Digital Loop with 4-Wire DDITS Trunk Port																
	Interoffice Channel Mileage - Fixed rate 0-8 miles (Facilities Termination)			UEPDC	1LNO1	75.83	145.98	109.85	19.66	14.99						
	Interoffice Channel Mileage - Additional rate per mile - 0-8 miles			UEPDC	1LNOA	0.3525	0.00	0.00								
	Interoffice Channel Mileage - Fixed rate 9-25 miles (Facilities Termination)			UEPDC	1LNO2	0.00	0.00	0.00								
	Interoffice Channel Mileage - Additional rate per mile - 9-25 miles			UEPDC	1LNOB	0.3525	0.00	0.00								
	Interoffice Channel Mileage - Fixed rate 25+ miles (Facilities Termination)			UEPDC	1LNO3	0.00	0.00	0.00								
	Interoffice Channel Mileage - Additional rate per mile - 25+ miles			UEPDC	1LNOC	0.3525	0.00	0.00								
	Local Number Portability, per DS0 Activated			UEPDC	LNPCP	3.15	0.00	0.00								
	Central Office Termininating Point			UEPDC	CTG	0.00										
4-WIRE DS1 LOOP WITH CHANNELIZATION WITH PORT																
System is 1 DS1 Loop, 1 D4 Channel Bank, and up to 24 Feature Activations																
Each System can have up to 24 combinations of rates depending on type and number of ports used																
UNE DS1 Loop																
	4-Wire DS1 Loop - UNE Zone 1		1	UEPMG	USLDC	57.73	0.00	0.00								
	4-Wire DS1 Loop - UNE Zone 2		2	UEPMG	USLDC	75.40	0.00	0.00								
	4-Wire DS1 Loop - UNE Zone 3		3	UEPMG	USLDC	98.59	0.00	0.00								
UNE DSO Channelization Capacities (D4 Channel Bank Configurations)																
	24 DSO Channel Capacity - 1 per DS1			UEPMG	VUM24	131.87	0.00	0.00					19.99	19.99		
	48 DSO Channel Capacity - 1 per 2 DS1s			UEPMG	VUM48	263.74	0.00	0.00					19.99	19.99		
	96 DSO Channel Capacity -1per 4 DS1s			UEPMG	VUM96	527.48	0.00	0.00					19.99	19.99		
	144 DS0 Channel Capacity - 1 per 6 DS1s			UEPMG	VUM14	791.42	0.00	0.00					19.99	19.99		
	192 DS0 Channel Capacity -1 per 8 DS1s			UEPMG	VUM19	827.76	0.00	0.00					19.99	19.99		
	240 DS0 Channel Capacity - 1 per 10 DS1s			UEPMG	VUM20	1,318.70	0.00	0.00					19.99	19.99		
	288 DS0 Channel Capacity - 1 per 12 DS1s			UEPMG	VUM28	1,582.44	0.00	0.00					19.99	19.99		
	384 DS0 Channel Capacity - 1 per 16 DS1s			UEPMG	VUM38	2,109.92	0.00	0.00					19.99	19.99		
	480 DS0 Channel Capacity - 1 per 20 DS1s			UEPMG	VUM40	2,637.40	0.00	0.00					19.99	19.99		
	576 DS0 Channel Capacity -1 per 24 DS1s			UEPMG	VUM57	3,164.88	0.00	0.00					19.99	19.99		
	672 DS0 Channel Capacity - 1 per 28 DS1s			UEPMG	VUM67	3,692.36	0.00	0.00					19.99	19.99		
Non-Recurring Charges (NRC) Associated with 4-Wire DS1 Loop with Channeliztion with Port - Conversion Charge Based on a System																

UNBUNDLED NETWORK ELEMENTS - Tennessee													Attachment: 2		Exhibit: B	
CATEGORY	RATE ELEMENTS	Interim	Zone	BCS	USOC	RATES($)					Svc Order Submitted Elec per LSR	Svc Order Submitted Manually per LSR	Incremental Charge - Manual Svc Order vs. Electronic-1st	Incremental Charge - Manual Svc Order vs. Electronic-Add'l	Incremental Charge - Manual Svc Order vs. Electronic-Disc 1st	Incremental Charge - Manual Svc Order vs. Electronic-Disc Add'l
						Rec	Nonrecurring		Nonrecurring Disconnect		OSS Rates($)					
							First	Add'l	First	Add'l	SOMEC	SOMAN	SOMAN	SOMAN	SOMAN	SOMAN
	A Minimum System configuration is One (1) DS1, One (1) D4 Channel Bank, and Up To 24 DSO Ports with Feature Activations.															
	Multiples of this configuration functioning as one are considered Add'l after the minimum system configuration is counted.															
	NRC - Conversion (Currently Combined) with or without BellSouth Allowed Changes			UEPMG	USAC4	0.00	303.61	15.74					19.99	19.99		
	System Additions at End User Locations Where 4-Wire DS1 Loop with Channelization with Port Combination Currently Exists and															
	New (Not Currently Combined) In GA, KY, LA, MS & TN Only															
	1 DS1/D4 Channel Bank - Add NRC for each Port and Assoc Fea Activation - New GA, LA, KY, MS, &TN Only			UEPMG	VUMD4	0.00	704.68	441.48	138.36	16.41			19.99			
	Bipolar 8 Zero Substitution															
	Clear Channel Capability Format, superframe - Subsequent Activity Only			UEPMG	CCOSF	0.00	0.00	590.00								
	Clear Channel Capability Format - Extended Superframe - Subsequent Activity Only			UEPMG	CCOEF	0.00	0.00	590.00								
	Alternate Mark Inversion (AMI)															
	Superframe Format			UEPMG	MCOSF	0.00	0.00	0.00								
	Extended Superframe Format			UEPMG	MCOPO	0.00	0.00	0.00								
	Exchange Ports Associated with 4-Wire DS1 Loop with Channelization with Port															
	Exchange Ports															
	Line Side Combination Channelized PBX Trunk Port - Business			UEPPX	UEPCX	1.79	0.00	0.00	0.00	0.00			30.89	7.03		
	Line Side Outward Channelized PBX Trunk Port - Business			UEPPX	UEPOX	1.79	0.00	0.00	0.00	0.00			30.89	7.03		
	Line Side Inward Only Channelized PBX Trunk Port without DID			UEPPX	UEP1X	1.79	0.00	0.00	0.00	0.00			30.89	7.03		
	2-Wire Trunk Side Unbundled Channelized DID Trunk Port			UEPPX	UEPDM	8.97	0.00	0.00	0.00	0.00			30.89	7.03		
	Feature Activations - Unbundled Loop Concentration															
	Feature (Service) Activation for each Line Side Port Terminated in D4 Bank			UEPPX	1PQWM	0.66	23.94	12.64	3.82	3.80			30.89	7.03		
	Feature (Service) Activation for each Trunk Side Port Terminated in D4 Bank			UEPPX	1PQWU	0.66	73.67	17.37	54.09	10.57			30.89	7.03		
	Telephone Number/ Group Establishment Charges for DID Service															
	DID Trunk Termination (1 per Port)			UEPPX	NDT	0.00	0.00	0.00								
	DID Numbers - groups of 20 - Valid all States			UEPPX	ND4	0.00	0.00	0.00								
	Non-Consecutive DID Numbers - per number			UEPPX	ND5	0.00	0.00	0.00								
	Reserve Non-Consecutive DID Numbers			UEPPX	ND6	0.00	0.00	0.00								
	Reserve DID Numbers			UEPPX	NDV	0.00	0.00	0.00								
	Local Number Portability															
	Local Number Portability - 1 per port			UEPPX	LNPCP	3.15	0.00	0.00								
	FEATURES - Vertical and Optional															
	Local Switching Features Offered with Line Side Ports Only															
	All Features Available			UEPPX	UEPVF	0.00	0.00	0.00								
UNBUNDLED PORT LOOP COMBINATIONS - MARKET RATES																
	Market Rates shall apply where BellSouth is not required to provide unbundled local switching or switch ports per FCC and/or State Commission rules.															
	These scenarios include:															
	1. Unbundled port/loop combinations that are Not Currently Combined in Alabama, Florida and North Carolina.															
	2. Unbundled port/loop combinations that are Currently Combined or Not Currently Combined in Zone 1 of the Top 8 MSAS in BellSouth's region for end users with 4 or more DS0 equivalent lines.															
	The Top 8 MSAs in BellSouth's region are: FL (Orlando, Ft. Lauderdale, Miami); GA (Atlanta); LA (New Orleans); NC (Greensboro-Winston Salem-Highpoint/Charlotte-Gastonia-Rock Hill); TN (Nashville).															
	BellSouth currently is developing the billing capability to mechanically bill the recurring and non-recurring Market Rates in this section except for nonrecurring charges for not currently combined in AL, FL and NC. In the interim where BellSouth cannot bill Market Rates, BellSouth shall bill the rates in the Cost-Based section preceding in lieu of the Market Rates and reserves the right to true-up the billing difference.															
	The Market Rate for unbundled ports includes all available features in all states.															
	End Office and Tandem Switching Usage and Common Transport Usage rates in the Port section of this rate exhibit shall apply to all combinations of loop/port network elements except for UNE Coin Port/Loop Combinations which have a flat rate usage charge (USOC: URECU).															
	For Not Currently Combined scenarios where Market Rates apply, the Nonrecurring charges are listed in the First and Additional NRC columns for each Port USOC. For Currently Combined scenarios, the Nonrecurring charges are listed in the NRC - Currently Combined section. Additional NRCs may apply also and are categorized accordingly.															
	2-WIRE VOICE GRADE LOOP WITH 2-WIRE LINE PORT (RES)															
	UNE Port/Loop Combination Rates															
	2-Wire VG Loop/Port Combo - Zone 1		1			26.48										
	2-Wire VG Loop/Port Combo - Zone 2		2			30.31										
	2-Wire VG Loop/Port Combo - Zone 3		3			35.32										
	UNE Loop Rates															

UNBUNDLED NETWORK ELEMENTS - Tennessee													Attachment: 2		Exhibit: B	
CATEGORY	RATE ELEMENTS	Interim	Zone	BCS	USOC	RATES($)					Svc Order Submitted Elec per LSR	Svc Order Submitted Manually per LSR	Incremental Charge - Manual Svc Order vs. Electronic-1st	Incremental Charge - Manual Svc Order vs. Electronic-Add'l	Incremental Charge - Manual Svc Order vs. Electronic-Disc 1st	Incremental Charge - Manual Svc Order vs. Electronic-Disc Add'l
						Rec	Nonrecurring		Nonrecurring Disconnect		OSS Rates($)					
							First	Add'l	First	Add'l	SOMEC	SOMAN	SOMAN	SOMAN	SOMAN	SOMAN
	2-Wire Voice Grade Loop (SL1) - Zone 1		1	UEPRX	UEPLX	12.48										
	2-Wire Voice Grade Loop (SL1) - Zone 2		2	UEPRX	UEPLX	16.31										
	2-Wire Voice Grade Loop (SL1) - Zone 3		3	UEPRX	UEPLX	21.32										
2-Wire Voice Grade Line Port (Res)																
	2-Wire voice unbundled port - residence			UEPRX	UEPRL	14.00	90.00	90.00					30.89	7.03		
	2-Wire voice unbundled port with Caller ID - res			UEPRX	UEPRC	14.00	90.00	90.00					30.89	7.03		
	2-Wire voice unbundled port outgoing only - res			UEPRX	UEPRO	14.00	90.00	90.00					30.89	7.03		
	2-Wire voice Grade unbundled Tennessee extended local dialing parity port with Caller ID - res			UEPRX	UEPAQ	14.00	90.00	90.00					30.89	7.03		
	2-Wire voice unbundled Tennessee Area Calling port with Caller ID - res (F2R)			UEPRX	UEPAK	14.00	90.00	90.00					30.89	7.03		
	2-Wire voice unbundled Tennessee Area Calling port with Caller ID - res (TACER)			UEPRX	UEPAL	14.00	90.00	90.00					30.89	7.03		
	2-Wire voice unbundled Tennessee Area Calling port with Caller ID - res (TACSR)			UEPRX	UEPAM	14.00	90.00	90.00					30.89	7.03		
	2-Wire voice unbundled Tennessee Area Calling port with Caller ID - res (1MF2X)			UEPRX	UEPAN	14.00	90.00	90.00					30.89	7.03		
	2-Wire voice unbundled Tennessee Area Calling port with Caller ID - res (2MR)			UEPRX	UEPAO	14.00	90.00	90.00					30.89	7.03		
	2-Wire voice unbundles res, low usage line port with Caller ID (LUM)			UEPRX	UEPAP	14.00	90.00	90.00					30.89	7.03		
LOCAL NUMBER PORTABILITY																
	Local Number Portability (1 per port)			UEPRX	LNPCX	0.35										
FEATURES																
	All Features Offered			UEPRX	UEPVF	0.00	0.00	0.00					30.89	7.03		
NONRECURRING CHARGES - CURRENTLY COMBINED																
	2-Wire Voice Grade Loop / Line Port Combination - Switch-as-is			UEPRX	USAC2		41.50	41.50					30.89	7.03		
	2-Wire Voice Grade Loop / Line Port Combination - Switch with change			UEPRX	USACC		41.50	41.50					30.89	7.03		
ADDITIONAL NRCs																
	NRC - 2-Wire Voice Grade Loop/Line Port Combination - Subsequent			UEPRX	USAS2	0.00	0.00	0.00					30.89	7.03		
2-WIRE VOICE GRADE LOOP WITH 2-WIRE LINE PORT (BUS)																
UNE Port/Loop Combination Rates																
	2-Wire VG Loop/Port Combo - Zone 1		1			26.48										
	2-Wire VG Loop/Port Combo - Zone 2		2			30.31										
	2-Wire VG Loop/Port Combo - Zone 3		3			35.32										
UNE Loop Rates																
	2-Wire Voice Grade Loop (SL1) - Zone 1		1	UEPBX	UEPLX	12.48										
	2-Wire Voice Grade Loop (SL1) - Zone 2		2	UEPBX	UEPLX	16.31										
	2-Wire Voice Grade Loop (SL1) - Zone 3		3	UEPBX	UEPLX	21.32										
2-Wire Voice Grade Line Port (Bus)																
	2-Wire voice unbundled port without Caller ID - bus			UEPBX	UEPBL	14.00	90.00	90.00					30.89	7.03		
	2-Wire voice unbundled port with Caller + E484 ID - bus			UEPBX	UEPBC	14.00	90.00	90.00					30.89	7.03		
	2-Wire voice unbundled port outgoing only - bus			UEPBX	UEPBO	14.00	90.00	90.00					30.89	7.03		
	2-Wire voice Grade unbundled Tennessee extended local dialing parity port with Caller ID - bus			UEPBX	UEPAV	14.00	90.00	90.00					30.89	7.03		
	2-Wire voice unbundled Tennessee Bus 2-Way Area Calling Port Economy Option (TACC1)			UEPBX	UEPAC	14.00	90.00	90.00					30.89	7.03		
	2-Wire voice unbundled Tennessee Bus 2-Way Area Calling Port Standard Option (TACC2)			UEPBX	UEPAD	14.00	90.00	90.00					30.89	7.03		
	2-Wire voice unbundled Tennessee Bus 2-Way Collierville and Memphis Local Calling Port (B2F)			UEPBX	UEPAE	14.00	90.00	90.00					30.89	7.03		
LOCAL NUMBER PORTABILITY																
	Local Number Portability (1 per port)			UEPBX	LNPCX	0.35										
FEATURES																
	All Features Offered			UEPBX	UEPVF	0.00	0.00	0.00					30.89	7.03		
NONRECURRING CHARGES - CURRENTLY COMBINED																

CATEGORY	RATE ELEMENTS	Interim	Zone	BCS	USOC	RATES($) Rec	Nonrecurring First	Nonrecurring Add'l	Nonrecurring Disconnect First	Nonrecurring Disconnect Add'l	Svc Order Submitted Elec per LSR	Svc Order Submitted Manually per LSR	Incremental Charge - Manual Svc Order vs. Electronic-1st	Incremental Charge - Manual Svc Order vs. Electronic-Add'l	Incremental Charge - Manual Svc Order vs. Electronic-Disc 1st	Incremental Charge - Manual Svc Order vs. Electronic-Disc Add'l
											OSS Rates($)					
											SOMEC	SOMAN	SOMAN	SOMAN	SOMAN	SOMAN
	2-Wire Voice Grade Loop / Line Port Combination - Switch-as-is			UEPBX	USAC2		41.50	41.50					30.89	7.03		
	2-Wire Voice Grade Loop / Line Port Combination - Switch with change			UEPBX	USACC		41.50	41.50					30.89	7.03		
ADDITIONAL NRCs																
	NRC - 2-Wire Voice Grade Loop/Line Port Combination - Subsequent			UEPBX	USAS2	0.00	0.00	0.00					30.89	7.03		
2-WIRE VOICE GRADE LOOP WITH 2-WIRE LINE PORT (RES - PBX)																
UNE Port/Loop Combination Rates																
	2-Wire VG Loop/Port Combo - Zone 1		1			26.48										
	2-Wire VG Loop/Port Combo - Zone 2		2			30.31										
	2-Wire VG Loop/Port Combo - Zone 3		3			35.32										
UNE Loop Rates																
	2-Wire Voice Grade Loop (SL1) - Zone 1		1	UEPRG	UEPLX	12.48										
	2-Wire Voice Grade Loop (SL1) - Zone 2		2	UEPRG	UEPLX	16.31										
	2-Wire Voice Grade Loop (SL1) - Zone 3		3	UEPRG	UEPLX	21.32										
2-Wire Voice Grade Line Port Rates (RES - PBX)																
	2-Wire VG Unbundled Combination 2-Way PBX Trunk Port - Res			UEPRG	UEPRD	14.00	90.00	90.00					30.89	7.03		
LOCAL NUMBER PORTABILITY																
	Local Number Portability (1 per port)			UEPRG	LNPCP	3.15	0.00	0.00								
FEATURES																
	All Features Offered			UEPRG	UEPVF	0.00	0.00	0.00					30.89	7.03		
NONRECURRING CHARGES - CURRENTLY COMBINED																
	2-Wire Voice Grade Loop/ Line Port Combination - Switch-As-Is			UEPRG	USAC2		41.50	41.50					30.89	7.03		
	2-Wire Voice Grade Loop/ Line Port Combination - Switch with Change			UEPRG	USACC		41.50	41.50					30.89	7.03		
ADDITIONAL NRCs																
	2 Wire Loop/Line Side Port Combination - Non feature - Subsequent Activity- Nonrecurring						0.00	0.00					30.89	7.03		
	PBX Subsequent Activity - Change/Rearrange Multiline Hunt Group						14.64	14.64					30.89	7.03		
2-WIRE VOICE GRADE LOOP WITH 2-WIRE LINE PORT (BUS - PBX)																
UNE Port/Loop Combination Rates																
	2-Wire VG Loop/Port Combo - Zone 1		1			26.48										
	2-Wire VG Loop/Port Combo - Zone 2		2			30.31										
	2-Wire VG Loop/Port Combo - Zone 3		3			35.32										
UNE Loop Rates																
	2-Wire Voice Grade Loop (SL1) - Zone 1		1	UEPPX	UEPLX	12.48										
	2-Wire Voice Grade Loop (SL1) - Zone 2		2	UEPPX	UEPLX	16.31										
	2-Wire Voice Grade Loop (SL1) - Zone 3		3	UEPPX	UEPLX	21.32										
2-Wire Voice Grade Line Port Rates (BUS - PBX)																
	Line Side Unbundled Combination 2-Way PBX Trunk Port - Bus			UEPPX	UEPPC	14.00	90.00	90.00					30.89	7.03		
	Line Side Unbundled Outward PBX Trunk Port - Bus			UEPPX	UEPPO	14.00	90.00	90.00					30.89	7.03		
	Line Side Unbundled Incoming PBX Trunk Port - Bus			UEPPX	UEPP1	14.00	90.00	90.00					30.89	7.03		
	2-Wire Voice Unbundled PBX LD Terminal Ports			UEPPX	UEPLD	14.00	90.00	90.00					30.89	7.03		
	2-Wire Voice Unbundled 2-Way Combination PBX Tennessee Calling Port			UEPPX	UEPT2	14.00	90.00	90.00					30.89	7.03		
	2-Wire Voice Unbundled 1-Way Outgoing PBX Tennessee Calling Port			UEPPX	UEPTO	14.00	90.00	90.00					30.89	7.03		
	2-Wire Voice Unbundled 2-Way Combination PBX Usage Port			UEPPX	UEPXA	14.00	90.00	90.00					30.89	7.03		
	2-Wire Voice Unbundled PBX Toll Terminal Hotel Ports			UEPPX	UEPXB	14.00	90.00	90.00					30.89	7.03		
	2-Wire Voice Unbundled PBX LD DDD Terminals Port			UEPPX	UEPXC	14.00	90.00	90.00					30.89	7.03		
	2-Wire Voice Unbundled PBX LD Terminal Switchboard Port			UEPPX	UEPXD	14.00	90.00	90.00					30.89	7.03		
	2-Wire Voice Unbundled PBX LD Terminal Switchboard IDD Capable Port			UEPPX	UEPXE	14.00	90.00	90.00					30.89	7.03		

CATEGORY	RATE ELEMENTS	Interim	Zone	BCS	USOC	RATES($) Rec	Nonrecurring First	Nonrecurring Add'l	Nonrecurring Disconnect First	Nonrecurring Disconnect Add'l	Svc Order Submitted Elec per LSR	Svc Order Submitted Manually per LSR	OSS Rates($) Incremental Charge - Manual Svc Order vs. Electronic-1st	Incremental Charge - Manual Svc Order vs. Electronic-Add'l	Incremental Charge - Manual Svc Order vs. Electronic-Disc 1st	Incremental Charge - Manual Svc Order vs. Electronic-Disc Add'l
											SOMEC	SOMAN	SOMAN	SOMAN	SOMAN	SOMAN
	2-Wire Voice Unbundled 2-Way PBX Hotel/Hospital Economy Administrative Calling Port			UEPPX	UEPXL	14.00	90.00	90.00					30.89	7.03		
	2-Wire Voice Unbundled 2-Way PBX Hotel/Hospital Economy Room Calling Port			UEPPX	UEPXM	14.00	90.00	90.00					30.89	7.03		
	2-Wire Voice Unbundled 1-W Out PBX Hotel/Hospital Economy Administrative Calling Port TN			UEPPX	UEPXN	14.00	90.00	90.00					30.89	7.03		
	2-Wire Voice Unbundled 1-Way Outgoing PBX Hotel/Hospital Discount Room Calling Port			UEPPX	UEPXO	14.00	90.00	90.00					30.89	7.03		
	2-Wire Voice Unbundled 1-Way Outgoing PBX Measured Port			UEPPX	UEPXS	14.00	90.00	90.00					30.89	7.03		
	2-Wire Voice Unbundled PBX Collierville and Memphis Calling Port			UEPPX	UEPXU	14.00	90.00	90.00					30.89	7.03		
	2-Wire Voice Unbundled 2-Way PBX Tennessee RegionServ Callling Port			UEPPX	UEPXV	14.00	90.00	90.00					30.89	7.03		
LOCAL NUMBER PORTABILITY																
	Local Number Portability (1 per port)			UEPPX	LNPCP	3.15	0.00	0.00								
FEATURES																
	All Features Offered			UEPPX	UEPVF	0.00	0.00	0.00					30.89	7.03		
NONRECURRING CHARGES - CURRENTLY COMBINED																
	2-Wire Voice Grade Loop/ Line Port Combination - Switch-As-Is			UEPPX	USAC2		41.50	41.50					30.89	7.03		
	2-Wire Voice Grade Loop/ Line Port Combination - Switch with Change			UEPPX	USACC		41.50	41.50					30.89	7.03		
	2-Wire Voice Grade Loop/ Line Port Combination - Subsequent			UEPPX	USAS2	0.00	0.00	0.00					30.89	7.03		
	2 Wire Loop/Line Side Port Combination - Non feature - Subsequent Activity- Nonrecurring						0.00	0.00					30.89	7.03		
	PBX Subsequent Activity - Change/Rearrange Multiline Hunt Group						14.64	14.64					30.89	7.03		
2-WIRE VOICE GRADE LOOP WITH 2-WIRE ANALOG LINE COIN PORT																
UNE Port/Loop Combination Rates																
	2-Wire VG Coin Port/Loop Combo – Zone 1		1			26.48										
	2-Wire VG Coin Port/Loop Combo – Zone 2		2			30.31										
	2-Wire VG Coin Port/Loop Combo – Zone 3		3			35.32										
UNE Loop Rates																
	2-Wire Voice Grade Loop (SL1) - Zone 1		1	UEPCO	UEPLX	12.48										
	2-Wire Voice Grade Loop (SL1) - Zone 2		2	UEPCO	UEPLX	16.31										
	2-Wire Voice Grade Loop (SL1) - Zone 3		3	UEPCO	UEPLX	21.32										
2-Wire Voice Grade Line Port Rates (Coin)																
	2-Wire Coin 2-Way without Operator Screening and without Blocking (TN)			UEPCO	UEPTB	14.00	90.00	90.00					30.89	7.03		
	2-Wire Coin 2-Way with Operator Screening and Blocking: 011, 900/976, 1+DDD (NC, TN)			UEPCO	UEPRP	14.00	90.00	90.00					30.89	7.03		
	2-Wire Coin 2-Way with Operator Screening and 011 Blocking (TN)			UEPCO	UEPTA	14.00	90.00	90.00					30.89	7.03		
	2-Wire Coin 2-Way with Operator Screening and Blocking: 900/976, 1+DDD, 011+, and Local (NC, TN)			UEPCO	UEPCA	14.00	90.00	90.00					30.89	7.03		
	2-Wire Coin Outward with Operator Screening and 011 Blocking (TN)			UEPCO	UEPTC	14.00	90.00	90.00					30.89	7.03		
	2-Wire Coin Outward with Operator Screening and Blocking: 900/976, 1+DDD, 011+, and Local (TN)			UEPCO	UEPOT	14.00	90.00	90.00					30.89	7.03		
LOCAL NUMBER PORTABILITY																
	Local Number Portability (1 per port)			UEPCO	LNPCX	0.35										
NONRECURRING CHARGES - CURRENTLY COMBINED																
	2-Wire Voice Grade Loop/ Line Port Combination - Switch-As-Is			UEPCO	USAC2		41.50	41.50					30.89	7.03		
	2-Wire Voice Grade Loop/ Line Port Combination - Switch with Change			UEPCO	USACC		41.50	41.50					30.89	7.03		
ADDITIONAL NRCs																

CATEGORY	RATE ELEMENTS	Interim	Zone	BCS	USOC	RATES($) Rec	Nonrecurring First	Nonrecurring Add'l	Nonrecurring Disconnect First	Nonrecurring Disconnect Add'l	Svc Order Submitted Elec per LSR	Svc Order Submitted Manually per LSR	Incremental Charge - Manual Svc Order vs. Electronic- 1st	Incremental Charge - Manual Svc Order vs. Electronic- Add'l	Incremental Charge - Manual Svc Order vs. Electronic- Disc 1st	Incremental Charge - Manual Svc Order vs. Electronic- Disc Add'l
											OSS Rates($)					
											SOMEC	SOMAN	SOMAN	SOMAN	SOMAN	SOMAN
	2-Wire Voice Grade Loop/ Line Port Combination - Subsequent			UEPCO	USAS2	0.00	0.00	0.00					30.89	7.03		
UNBUNDLED PORT/LOOP COMBINATIONS - MARKET BASED RATES																
2-WIRE VOICE GRADE LOOP- BUS ONLY - WITH 2-WIRE DID TRUNK PORT																
UNE Port/Loop Combination Rates																
	2-Wire VG Loop/2-Wire DID Trunk Port Combo - UNE Zone 1		1			49.60										
	2-Wire VG Loop/2-Wire DID Trunk Port Combo - UNE Zone 2		2			51.09										
	2-Wire VG Loop/2-Wire DID Trunk Port Combo - UNE Zone 3		3			56.00										
UNE Loop Rates																
	2-Wire Analog Voice Grade Loop - (SL2) - UNE Zone 1		1	UEPPX	UECD1	9.60										
	2-Wire Analog Voice Grade Loop - (SL2) - UNE Zone 2		2	UEPPX	UECD1	11.09										
	2-Wire Analog Voice Grade Loop - (SL2) - UNE Zone 3		3	UEPPX	UECD1	16.00										
	Exchange Ports - 2-Wire DID Port			UEPPX	UEPD1	40.00	600.00	45.00	8.45	3.91			30.89	7.03		
NONRECURRING CHARGES - CURRENTLY COMBINED																
	2-Wire Voice Grade Loop / 2-Wire DID Trunk Port Combination - Switch-As-Is Top 8 MSAs only			UEPPX	USAC1		100.00	42.50					30.89	7.03		
	2-Wire Voice Grade Loop / 2-Wire DID Trunk Port Conversion with BellSouth Allowable Changes Top 8 MSAs only			UEPPX	USA1C		100.00	42.50					30.89	7.03		
Telephone Number/Trunk Group Establisment Charges																
	DID Trunk Termination (One Per Port)			UEPPX	NDT	0.00	0.00	0.00								
	Additional DID Numbers for each Group of 20 DID Numbers			UEPPX	ND4	0.00	0.00	0.00								
	DID Numbers, Non- consecutive DID Numbers , Per Number			UEPPX	ND5	0.00	0.00	0.00								
	Reserve Non-Consecutive DID numbers			UEPPX	ND6	0.00	0.00	0.00								
	Reserve DID Numbers			UEPPX	NDV	0.00	0.00	0.00								
LOCAL NUMBER PORTABILITY																
	Local Number Portability (1 per port)			UEPPX	LNPCP	3.15	0.00	0.00								
2-WIRE ISDN DIGITAL GRADE LOOP WITH 2-WIRE ISDN DIGITAL LINE SIDE PORT																
UNE Port/Loop Combination Rates																
	2W ISDN Digital Grade Loop/2W ISDN Digital Line Side Port - UNE Zone 1		1	UEPPB UEPPR		32.27										
	2W ISDN Digital Grade Loop/2W ISDN Digital Line Side Port - UNE Zone 2		2	UEPPB UEPPR		34.78										
	2W ISDN Digital Grade Loop/2W ISDN Digital Line Side Port - UNE Zone 3		3	UEPPB UEPPR		44.32										
	2-Wire ISDN Digital Grade Loop - UNE Zone 1		1	UEPPB UEPPR	USL2X	16.20										
	2-Wire ISDN Digital Grade Loop - UNE Zone 2		2	UEPPB UEPPR	USL2X	18.71										
	2-Wire ISDN Digital Grade Loop - UNE Zone 3		3	UEPPB UEPPR	USL2X	28.25										
	Exchange Port - 2-Wire ISDN Line Side Port			UEPPB UEPPR	UEPPB	80.00	525.00	400.00	75.00	70.00			30.89	7.03		
NONRECURRING CHARGES - CURRENTLY COMBINED																
	2-Wire ISDN Digital Grade Loop / 2-Wire ISDN Line Side Port Combination - Conversion - Top 8 MSAs only			UEPPB UEPPR	USACB	0.00	225.00	225.00					30.89	7.03		
ADDITIONAL NRCs																
	2-Wire ISDN Loop / 2-Wire ISDN Port Combination - Sub Actvy - Non Feature/Add Trunk			UEPPB UEPPR	USASB		212.88						30.89	7.03		
LOCAL NUMBER PORTABILITY																
	Local Number Portability (1 per port)			UEPPB UEPPR	LNPCX	0.35	0.00	0.00								
B-CHANNEL USER PROFILE ACCESS:																
	CVS/CSD (DMS/5ESS)			UEPPB UEPPR	U1UCA	0.00	0.00	0.00								
	CVS (EWSD)			UEPPB UEPPR	U1UCB	0.00	0.00	0.00								
	CSD			UEPPB UEPPR	U1UCC	0.00	0.00	0.00								
B-CHANNEL AREA PLUS USER PROFILE ACCESS: (AL,KY,LA,MS SC,MS, & TN)																
	CVS/CSD (DMS/5ESS)			UEPPB UEPPR	U1UCD	0.00	0.00	0.00								
	CVS (EWSD)			UEPPB UEPPR	U1UCE	0.00	0.00	0.00								
	CSD			UEPPB UEPPR	U1UCF	0.00	0.00	0.00								
USER TERMINAL PROFILE																
	User Terminal Profile (EWSD only)			UEPPB UEPPR	U1UMA	0.00	0.00	0.00								
VERTICAL FEATURES																
	All Vertical Features - One per Channel B User Profile			UEPPB UEPPR	UEPVF	0.00	0.00	0.00								

CATEGORY	RATE ELEMENTS	Interim	Zone	BCS	USOC	RATES($) Rec	Nonrecurring First	Nonrecurring Add'l	Nonrecurring Disconnect First	Nonrecurring Disconnect Add'l	Svc Order Submitted Elec per LSR	Svc Order Submitted Manually per LSR	Incremental Charge - Manual Svc Order vs. Electronic-1st	Incremental Charge - Manual Svc Order vs. Electronic-Add'l	Incremental Charge - Manual Svc Order vs. Electronic-Disc 1st	Incremental Charge - Manual Svc Order vs. Electronic-Disc Add'l
											OSS Rates($)					
											SOMEC	SOMAN	SOMAN	SOMAN	SOMAN	SOMAN
	Interoffice Channel mileage each, including first mile and facilities termination			UEPPB UEPPR	M1GNC	17.91	53.99	17.37								
	Interoffice Channel mileage each, additional mile			UEPPB UEPPR	M1GNM	0.173	0.00	0.00								
4-WIRE DS1 DIGITAL LOOP WITH 4-WIRE ISDN DS1 DIGITAL TRUNK PORT																
UNE Port/Loop Combination Rates																
	4W DS1 Digital Loop/4W ISDN DS1 Digital Trunk Port - UNE Zone 1		1	UEPPP		982.73										
	4W DS1 Digital Loop/4W ISDN DS1 Digital Trunk Port - UNE Zone 2		2	UEPPP		1,000.40										
	4W DS1 Digital Loop/4W ISDN DS1 Digital Trunk Port - UNE Zone 3		3	UEPPP		1,023.59										
	4-Wire DS1 Digital Loop - UNE Zone 1		1	UEPPP	USL4P	57.73										
	4-Wire DS1 Digital Loop - UNE Zone 2		2	UEPPP	USL4P	75.40										
	4-Wire DS1 Digital Loop - UNE Zone 3		3	UEPPP	USL4P	98.59										
	Exchange Ports - 4-Wire ISDN DS1 Port			UEPPP	UEPPP	925.00	950.00	950.00	130.00	100.00			30.89	7.03		
NONRECURRING CHARGES - CURRENTLY COMBINED																
	4-Wire DS1 Digital Loop / 4-Wire ISDN DS1 Digital Trunk Port Combination - Conversion -Switch-As-Is Top 8 MSAs only			UEPPP	USACP	0.00	925.00	925.00					30.89	7.03		
ADDITIONAL NRCs																
	4-Wire DS1 Loop/4-W ISDN Digtl Trk Port - Subsqt Actvy-Inward/two way tel nos within Std Allowance (except NC)			UEPPP	PR7TF		0.94									
	4-Wire DS1 Loop / 4-Wire ISDN DS1 Digital Trunk Port - Outward Tel Numbers (All States except NC)			UEPPP	PR7TO		22.36	22.36								
	4-Wire DS1 Loop / 4-Wire ISDN DS1 Digital Trk Port - Subsequent Inward Tel Nos Above Std Allowance			UEPPP	PR7ZT		44.71	44.70								
LOCAL NUMBER PORTABILITY																
	Local Number Portability (1 per port)			UEPPP	LNPCN	1.75										
INTERFACE (Provsioning Only)																
	Voice/Data			UEPPP	PR71V	0.00	0.00	0.00								
	Digital Data			UEPPP	PR71D	0.00	0.00	0.00								
	Inward Data			UEPPP	PR71E	0.00	0.00	0.00								
New or Additional "B" Channel																
	New or Additional - Voice/Data B Channel			UEPPP	PR7BV	0.00	28.39									
	New or Additional - Digital Data B Channel			UEPPP	PR7BF	0.00	29.11									
	New or Additional Inward Data B Channel			UEPPP	PR7BD	0.00	29.39									
CALL TYPES																
	Inward			UEPPP	PR7C1	0.00	0.00	0.00								
	Outward			UEPPP	PR7C0	0.00	0.00	0.00								
	Two-way			UEPPP	PR7CC	0.00	0.00	0.00								
Interoffice Channel Mileage																
	Fixed Each Including First Mile			UEPPP	1LN1A	76.1825	145.98	109.85	19.55							
	Each Airline-Fractional Additional Mile			UEPPP	1LN1B	0.3525										
4-WIRE DS1 DIGITAL LOOP WITH 4-WIRE DDITS TRUNK PORT																
UNE Port/Loop Combination Rates																
	4W DS1 Digital Loop/4W DDITS Trunk Port - Statewide		sw	UEPDC												
	4W DS1 Digital Loop/4W DDITS Trunk Port - UNE Zone 1		1	UEPDC		93.28										
	4W DS1 Digital Loop/4W DDITS Trunk Port - UNE Zone 2		2	UEPDC		110.95										
	4W DS1 Digital Loop/4W DDITS Trunk Port - UNE Zone 3		3	UEPDC		134.14										
	4W DS1 Digital Loop/4W DDITS Trunk Port - UNE Zone 4		4	UEPDC												
UNE Loop Rates																
	4-Wire DS1 Digital Loop - Statewide		sw	UEPDC	USLDC											
	4-Wire DS1 Digital Loop - UNE Zone 1		1	UEPDC	USLDC	57.53										
	4-Wire DS1 Digital Loop - UNE Zone 2		2	UEPDC	USLDC	75.40										
	4-Wire DS1 Digital Loop - UNE Zone 3		3	UEPDC	USLDC	98.59										
	4-Wire DS1 Digital Loop - UNE Zone 4		4	UEPDC	USLDC											
UNE Port Rate																
	4-Wire DDITS Digital Trunk Port			UEPDC	UDD1T	750.00	982.57	450.10	196.09	19.23			30.89	7.03		
NONRECURRING CHARGES - CURRENTLY COMBINED																

CATEGORY	RATE ELEMENTS	Interim	Zone	BCS	USOC	RATES($) Rec	Nonrecurring First	Nonrecurring Add'l	Nonrecurring Disconnect First	Nonrecurring Disconnect Add'l	Svc Order Submitted Elec per LSR	Svc Order Submitted Manually per LSR	Incremental Charge - Manual Svc Order vs. Electronic-1st	Incremental Charge - Manual Svc Order vs. Electronic-Add'l	Incremental Charge - Manual Svc Order vs. Electronic-Disc 1st	Incremental Charge - Manual Svc Order vs. Electronic-Disc Add'l
											OSS Rates($)					
											SOMEC	SOMAN	SOMAN	SOMAN	SOMAN	SOMAN
	4-Wire DS1 Digital Loop / 4-Wire DDITS Trunk Port Combination - Switch-As-Is Top 8 MSAs only			UEPDC	USAC4		312.91	312.91					30.89	7.03		
	4-Wire DS1 Digital Loop / 4-Wire DDITS Trunk Port Combination - Conversion with DS1 Changes Top 8 MSAs only			UEPDC	USAWA		312.91	312.91					30.89	7.03		
	4-Wire DS1 Digital Loop / 4-Wire DDITS Trunk Port Combination - Conversion with Change - Trunk Top 8 MSAs only			UEPDC	USAWB		312.91	312.91					30.89	7.03		
ADDITIONAL NRCs																
	4-Wire DS1 Loop / 4-Wire DDITS Trunk Port - Subsequent Service Activity Per Service Order			UEPDC	USAS4		94.88	94.88								
	4-Wire DS1 Loop / 4-Wire DDITS Trunk Port - NRC - Subsequent Channel Activation/Chan - 2-Way Trunk			UEPDC	UDTTA		108.67	108.67					30.89	7.03		
	4-Wire DS1 Loop / 4-Wire DDITS Trunk Port - Subsequent Channel Activation/Chan - 1-Way Outward Trunk			UEPDC	UDTTB		108.67	108.67					30.89	7.03		
	4-Wire DS1 Loop / 4-Wire DDITS Trunk Port - Subsqnt Channel Activation/Chan Inward Trunk w/out DID			UEPDC	UDTTC		108.67	108.67					30.89	7.03		
	4-Wire DS1 Loop / 4-Wire DDITS Trunk Port - Subsqnt Chan Activation Per Chan - Inward Trunk with DID			UEPDC	UDTTD		108.67	108.67					30.89	7.03		
	4-Wire DS1 Loop / 4-Wire DDITS Trunk Port - Subsqnt Chan Activation / Chan - 2-Way DID w User Trans			UEPDC	UDTTE		108.67	108.67					30.89	7.03		
BIPOLAR 8 ZERO SUBSTITUTION																
	B8ZS -Superframe Format			UEPDC	CCOSF		0.00	590.00								
	B8ZS - Extended Superframe Format			UEPDC	CCOEF		0.00	590.00								
Alternate Mark Inversion																
	AMI -Superframe Format			UEPDC	MCOSF		0.00	0.00								
	AMI - Extended SuperFrame Format			UEPDC	MCOPO		0.00	0.00								
Telephone Number/Trunk Group Establisment Charges																
	Telephone Number for 2-Way Trunk Group			UEPDC	UDTGX	0.00										
	Telephone Number for 1-Way Outward Trunk Group			UEPDC	UDTGY	0.00										
	Telephone Number for 1-Way Inward Trunk Group Without DID			UEPDC	UDTGZ	0.00										
	DID Numbers, Establish Trunk Group and Provide First Group of 20 DID Numbers			UEPDC	NDZ	0.00	0.00	0.00								
	DID Numbers for each Group of 20 DID Numbers			UEPDC	ND4	0.00										
	DID Numbers, Non- consecutive DID Numbers , Per Number			UEPDC	ND5	0.00										
	Reserve Non-Consecutive DID Nos.			UEPDC	ND6	0.00	0.00	0.00								
	Reserve DID Numbers			UEPDC	NDV	0.00	0.00	0.00								
Dedicated DS1 (Interoffice Channel Mileage) -																
FX/FCO for 4-Wire DS1 Digital Loop with 4-Wire DDITS Trunk Port																
	Interoffice Channel Mileage - Fixed rate 0-8 miles (Facilities Termination)			UEPDC	1LNO1	75.83	145.98	109.85	19.66	14.99						
	Interoffice Channel Mileage - Additional rate per mile - 0-8 miles			UEPDC	1LNOA	0.3525	0.00	0.00								
	Interoffice Channel Mileage - Fixed rate 9-25 miles (Facilities Termination)			UEPDC	1LNO2	0.00	0.00	0.00								
	Interoffice Channel Mileage - Additional rate per mile - 9-25 miles			UEPDC	1LNOB	0.3525	0.00	0.00								
	Interoffice Channel Mileage - Fixed rate 25+ miles (Facilities Termination)			UEPDC	1LNO3	0.00	0.00	0.00								
	Interoffice Channel Mileage - Additional rate per mile - 25+ miles			UEPDC	1LNOC	0.3525	0.00	0.00								
	Local Number Portability, per DS0 Activated			UEPDC	LNPCP	3.15	0.00	0.00								
	Central Office Termininating Point			UEPDC	CTG	0.00										
4-WIRE DS1 LOOP WITH CHANNELIZATION WITH PORT																
System is 1 DS1 Loop, 1 D4 Channel Bank, and up to 24 Feature Activations																
A system can have various rate combinations based on type and number of ports used																
UNE DS1 Loop																
	4-Wire DS1 Loop - UNE Zone 1		1	UEPMG	USLDC	57.73	0.00	0.00								
	4-Wire DS1 Loop - UNE Zone 2		2	UEPMG	USLDC	75.40	0.00	0.00								

UNBUNDLED NETWORK ELEMENTS - Tennessee													Attachment: 2		Exhibit: B	
CATEGORY	RATE ELEMENTS	Interim	Zone	BCS	USOC	RATES($)					Svc Order Submitted Elec per LSR	Svc Order Submitted Manually per LSR	Incremental Charge - Manual Svc Order vs. Electronic-1st	Incremental Charge - Manual Svc Order vs. Electronic-Add'l	Incremental Charge - Manual Svc Order vs. Electronic-Disc 1st	Incremental Charge - Manual Svc Order vs. Electronic-Disc Add'l
						Rec	Nonrecurring		Nonrecurring Disconnect		OSS Rates($)					
							First	Add'l	First	Add'l	SOMEC	SOMAN	SOMAN	SOMAN	SOMAN	SOMAN
	4-Wire DS1 Loop - UNE Zone 3		3	UEPMG	USLDC	98.59	0.00	0.00								
	UNE DSO Channelization Capacities (D4 Channel Bank Configurations)															
	24 DSO Channel Capacity - 1 per DS1			UEPMG	VUM24	131.87	0.00	0.00					30.89	7.03		
	48 DSO Channel Capacity - 1 per 2 DS1s			UEPMG	VUM48	263.74	0.00	0.00					30.89	7.03		
	96 DSO Channel Capacity -1per 4 DS1s			UEPMG	VUM96	527.48	0.00	0.00					30.89	7.03		
	144 DS0 Channel Capacity - 1 per 6 DS1s			UEPMG	VUM14	791.42	0.00	0.00					30.89	7.03		
	192 DS0 Channel Capacity -1 per 8 DS1s			UEPMG	VUM19	827.76	0.00	0.00					30.89	7.03		
	240 DS0 Channel Capacity - 1 per 10 DS1s			UEPMG	VUM20	1,318.70	0.00	0.00					30.89	7.03		
	288 DS0 Channel Capacity - 1 per 12 DS1s			UEPMG	VUM28	1,582.44	0.00	0.00					30.89	7.03		
	384 DS0 Channel Capacity - 1 per 16 DS1s			UEPMG	VUM38	2,109.92	0.00	0.00					30.89	7.03		
	480 DS0 Channel Capacity - 1 per 20 DS1s			UEPMG	VUM40	2,637.40	0.00	0.00					30.89	7.03		
	576 DS0 Channel Capacity -1 per 24 DS1s			UEPMG	VUM57	3,164.88	0.00	0.00					30.89	7.03		
	672 DS0 Channel Capacity - 1 per 28 DS1s			UEPMG	VUM67	3,692.36	0.00	0.00					30.89	7.03		
	Non-Recurring Charges (NRC) Associated with 4-Wire DS1 Loop with Channeliztion with Port - Conversion Charge Based on a System															
	A Minimum System configuration is One (1) DS1, One (1) D4 Channel Bank, and Up To 24 DSO Ports with Feature Activations.															
	Multiples of this configuration functioning as one are considered Add'l after the minimum system configuration is counted.															
	NRC - Conversion (Currently Combined) with or without BellSouth Allowed Changes - Top 8 MSAs Only			UEPMG	USAC4	0.00	303.61	15.74					30.89	7.03		
	System Additions Where Currently Combined and New (Not Currently Combined)															
	In Top 8 MSAs and AL, FL, and NC Only															
	1 DS1/D4 Channel Bank - Add NRC for each Port and Assoc Fea Activation -			UEPMG	VUMD4	0.00	704.68	441.48	138.36	16.41			30.89	7.03		
	Bipolar 8 Zero Substitution															
	Clear Channel Capability Format, superframe - Subsequent Activity Only			UEPMG	CCOSF	0.00	0.00	590.00								
	Clear Channel Capability Format - Extended Superframe - Subsequent Activity Only			UEPMG	CCOEF	0.00	0.00	590.00								
	Alternate Mark Inversion (AMI)															
	Superframe Format			UEPMG	MCOSF	0.00	0.00	0.00								
	Extended Superframe Format			UEPMG	MCOPO	0.00	0.00	0.00								
	Exchange Ports Associated with 4-Wire DS1 Loop with Channelization with Port															
	Exchange Ports															
	Line Side Combination Channelized PBX Trunk Port - Business			UEPPX	UEPCX	14.00	0.00	0.00	0.00	0.00			30.89	7.03		
	Line Side Outward Channelized PBX Trunk Port - Business			UEPPX	UEPOX	14.00	0.00	0.00	0.00	0.00			30.89	7.03		
	Line Side Inward Only Channelized PBX Trunk Port without DID			UEPPX	UEP1X	14.00	0.00	0.00	0.00	0.00			30.89	7.03		
	2-Wire Trunk Side Unbundled Channelized DID Trunk Port			UEPPX	UEPDM	40.00	0.00	0.00	0.00	0.00			30.89	7.03		
	Feature Activations - Unbundled Loop Concentration															
	Feature (Service) Activation for each Line Side Port Terminated in D4 Bank			UEPPX	1PQWM	0.66	40.00	20.00	6.00	5.00						
	Feature (Service) Activation for each Trunk Side Port Terminated in D4 Bank			UEPPX	1PQWU	0.66	110.00	30.00	75.00	15.00						
	Telephone Number/ Group Establishment Charges for DID Service															
	DID Trunk Termination (1 per Port)			UEPPX	NDT	0.00	0.00	0.00								
	DID Numbers - groups of 20 - Valid all States			UEPPX	ND4	0.00	0.00	0.00								
	Non-Consecutive DID Numbers - per number			UEPPX	ND5	0.00	0.00	0.00								
	Reserve Non-Consecutive DID Numbers			UEPPX	ND6	0.00	0.00	0.00								
	Reserve DID Numbers			UEPPX	NDV	0.00	0.00	0.00								
	Local Number Portability															
	Local Number Portability - 1 per port			UEPPX	LNPCP	3.15	0.00	0.00								
	FEATURES - Vertical and Optional															
	Local Switching Features Offered with Line Side Ports Only															
	All Features Available			UEPPX	UEPVF	0.00	0.00	0.00								
UNBUNDLED CENTREX PORT/LOOP COMBINATIONS - COST BASED RATES																
	1. Cost Based Rates are applied where BellSouth is required by FCC and/or State Commission rule to provide Unbundled Local Switching or Switch Ports.															
	2. Features shall apply to the Unbundled Port/Loop Combination - Cost Based Rate section in the same manner as they are applied to the Stand-Alone Unbundled Port section of this Rate Exhibit.															
	3. End Office and Tandem Switching Usage and Common Transport Usage rates in the Port section of this rate exhibit shall apply to all combinations of loop/port network elements except for UNE Coin Port/Loop Combinations.															

CATEGORY	RATE ELEMENTS	Interim	Zone	BCS	USOC	RATES($) Rec	Nonrecurring First	Nonrecurring Add'l	Nonrecurring Disconnect First	Nonrecurring Disconnect Add'l	Svc Order Submitted Elec per LSR	Svc Order Submitted Manually per LSR	Incremental Charge - Manual Svc Order vs. Electronic-1st	Incremental Charge - Manual Svc Order vs. Electronic-Add'l	Incremental Charge - Manual Svc Order vs. Electronic-Disc 1st	Incremental Charge - Manual Svc Order vs. Electronic-Disc Add'l
											OSS Rates($)					
											SOMEC	SOMAN	SOMAN	SOMAN	SOMAN	SOMAN
	For Georgia, Kentucky, Louisiana, MIssissippi and Tennessee, the recurring UNE Port and Loop charges listed apply to Currently Combined and Not Currently Combined Combos. The the first and additional Port nonrecurring charges apply to Not Currently Combined Combos for all states. In GA, KY, LA, MS and TN these nonrecurring charges are commission ordered cost based rates and in AL, FL, NC and SC these nonrecurring charges are Market Rates and are listed in the Market Rate section. For Currently Combined Combos in all other states, the nonrecurring charges shall be those identified in the Nonrecurring - Currently Combined sections.															
	5. Market Rates for Unbundled Centrex Port/Loop Combination will be negotiated on an Individual Case Basis, until further notice.															
	UNE-P CENTREX - 1AESS - (Valid in AL,FL,GA,KY,LA,MS,&TN only)															
	2-Wire VG Loop/2-Wire Voice Grade Port (Centrex) Combo															
	UNE Port/Loop Combination Rates (Non-Design)															
	2-Wire VG Loop/2-Wire Voice Grade Port (Centrex) Port Combo - Non-Design		1	UEP91		14.18										
	2-Wire VG Loop/2-Wire Voice Grade Port (Centrex)Port Combo - Non-Design		2	UEP91		18.01										
	2-Wire VG Loop/2-Wire Voice Grade Port (Centrex)Port Combo - Non-Design		3	UEP91		23.02										
	UNE Port/Loop Combination Rates (Design)															
	2-Wire VG Loop/2-Wire Voice Grade Port (Centrex) Port Combo - Design		1	UEP91		18.26										
	2-Wire VG Loop/2-Wire Voice Grade Port (Centrex)Port Combo - Design		2	UEP91		23.33										
	2-Wire VG Loop/2-Wire Voice Grade Port (Centrex)Port Combo - Design		3	UEP91		29.98										
	UNE Loop Rate															
	2-Wire Voice Grade Loop (SL 1) - Zone 1		1	UEP91	UECS1	12.48										
	2-Wire Voice Grade Loop (SL 1) - Zone 2		2	UEP91	UECS1	16.31										
	2-Wire Voice Grade Loop (SL 1) - Zone 3		3	UEP91	UECS1	21.32										
	2-Wire Voice Grade Loop (SL 2) - Zone 1		1	UEP91	UECS2	16.56										
	2-Wire Voice Grade Loop (SL 2) - Zone 2		2	UEP91	UECS2	21.63										
	2-Wire Voice Grade Loop (SL 2) - Zone 3		3	UEP91	UECS2	28.28										
	UNE Ports															
	All States (Except North Carolina and Sout Carolina)															
	2-Wire Voice Grade Port (Centrex) Basic Local Area			UEP91	UEPYA	1.70	22.14	15.25	8.45	3.91		30.89	7.03			
	2-Wire Voice Grade Port (Centrex 800 termination)Basic Local Area			UEP91	UEPYB	1.70	22.14	15.25	8.45	3.91		30.89	7.03			
	2-Wire Voice Grade Port (Centrex with Caller ID)1Basic Local Area			UEP91	UEPYH	1.70	22.14	15.25	8.45	3.91		30.89	7.03			
	2-Wire Voice Grade Port (Centrex from diff Serving Wire Center)2 Basic Local Area			UEP91	UEPYM	1.70	22.14	15.25	8.45	3.91		30.89	7.03			
	2-Wire Voice Grade Port, Diff Serving Wire Center - 800 Service Term - Basic Local Area			UEP91	UEPYZ	1.70	22.14	15.25	8.45	3.91		30.89	7.03			
	2-Wire Voice Grade Port terminated in on Megalink or equivalent - Basic Local Area			UEP91	UEPY9	1.70	22.14	15.25	8.45	3.91		30.89	7.03			
	2-Wire Voice Grade Port Terminated on 800 Service Term - Basic Local Area			UEP91	UEPY2	1.70	22.14	15.25	8.45	3.91		30.89	7.03			
	AL, KY, LA, MS, & TN Only															
	2-Wire Voice Grade Port (Centrex)			UEP91	UEPQA	1.70	22.14	15.25	8.45	3.91		30.89	7.03			
	2-Wire Voice Grade Port (Centrex 800 termination)			UEP91	UEPQB	1.70	22.14	15.25	8.45	3.91		30.89	7.03			
	2-Wire Voice Grade Port (Centrex with Caller ID)1			UEP91	UEPQH	1.70	22.14	15.25	8.45	3.91		30.89	7.03			
	2-Wire Voice Grade Port (Centrex from diff Serving Wire Center)2			UEP91	UEPQM	1.70	22.14	15.25	8.45	3.91		30.89	7.03			
	2-Wire Voice Grade Port, Diff Serving Wire Center - 800 Service Term			UEP91	UEPQZ	1.70	22.14	15.25	8.45	3.91		30.89	7.03			
	2-Wire Voice Grade Port terminated in on Megalink or equivalent			UEP91	UEPQ9	1.70	22.14	15.25	8.45	3.91		30.89	7.03			
	2-Wire Voice Grade Port Terminated on 800 Service Term			UEP91	UEPQ2	1.70	22.14	15.25	8.45	3.91		30.89	7.03			
	Local Switching															
	Centrex Intercom Funtionality, per port			UEP91	URECS	0.6381										
	Local Number Portability															
	Local Number Portability (1 per port)			UEP91	LNPCC	0.35										
	Features															
	All Standard Features Offered, per port			UEP91	UEPVF	0.00						30.89	7.03			

UNBUNDLED NETWORK ELEMENTS - Tennessee													Attachment: 2		Exhibit: B	
CATEGORY	RATE ELEMENTS	Interim	Zone	BCS	USOC	RATES($)					Svc Order Submitted Elec per LSR	Svc Order Submitted Manually per LSR	Incremental Charge - Manual Svc Order vs. Electronic-1st	Incremental Charge - Manual Svc Order vs. Electronic-Add'l	Incremental Charge - Manual Svc Order vs. Electronic-Disc 1st	Incremental Charge - Manual Svc Order vs. Electronic-Disc Add'l
						Rec	Nonrecurring		Nonrecurring Disconnect		OSS Rates($)					
							First	Add'l	First	Add'l	SOMEC	SOMAN	SOMAN	SOMAN	SOMAN	SOMAN
	All Select Features Offered, per port			UEP91	UEPVS	0.00	433.78					30.89	7.03			
	All Centrex Control Features Offered, per port			UEP91	UEPVC	0.00						30.89	7.03			
NARS																
	Unbundled Network Access Register - Combination			UEP91	UARCX	0.00	0.00	0.00				30.89	7.03			
	Unbundled Network Access Register - Indial			UEP91	UAR1X	0.00	0.00	0.00				30.89	7.03			
	Unbundled Network Access Register - Outdial			UEP91	UAROX	0.00	0.00	0.00				30.89	7.03			
Miscellaneous Terminations																
2-Wire Trunk Side																
	Trunk Side Terminations, each			UEP91	CENA6	8.78	22.14	15.25	8.45	3.91		30.89	7.03			
Interoffice Channel Mileage - 2-Wire																
	Interoffice Channel Facilities Termination - Voice Grade			UEP91	MIGBC	18.58	22.14	15.25	8.45	3.91		30.89	7.03			
	Interoffice Channel mileage, per mile or fraction of mile			UEP91	MIGBM	0.0174										
Feature Activations (DS0) Centrex Loops on Channelized DS1 Service																
D4 Channel Bank Feature Activations																
	Feature Activation on D-4 Channel Bank Centrex Loop Slot			UEP91	1PQWS	0.66										
	Feature Activation on D-4 Channel Bank FX line Side Loop Slot			UEP91	1PQW6	0.66										
	Feature Activation on D-4 Channel Bank FX Trunk Side Loop Slot			UEP91	1PQW7	0.66										
	Feature Activation on D-4 Channel Bank Centrex Loop Slot - Different Wire Center			UEP91	1PQWP	0.66										
	Feature Activation on D-4 Channel Bank Private Line Loop Slot			UEP91	1PQWV	0.66										
	Feature Activation on D-4 Channel Bank Tjie Line/Trunk Loop Slot			UEP91	1PQWQ	0.66										
	Feature Activation on D-4 Channel Bank WATS Loop Slot			UEP91	1PQWA	0.66										
Non-Recurring Charges (NRC) Associated with UNE-P Centrex																
	Conversion - Currently Combined Switch-As-Is with allowed changes, per port			UEP91	USAC2		1.03	0.29				30.89	7.03			
	New Centrex Standard Common Block			UEP91	M1ACS	0.00	658.60					30.89	7.03			
	New Centrex Customized Common Block			UEP91	M1ACC	0.00	658.60					30.89	7.03			
	Secondary Block, per Block			UEP91	M2CC1	0.00	73.55					30.89	7.03			
	NAR Establishment Charge, Per Occasion			UEP91	URECA		68.57					30.89	7.03			
UNE-P CENTREX - 5ESS (Valid in All States)																
2-Wire VG Loop/2-Wire Voice Grade Port (Centrex) Combo																
UNE Port/Loop Combination Rates (Non-Design)																
	2-Wire VG Loop/2-Wire Voice Grade Port (Centrex) Port Combo - Non-Design		1	UEP95		14.18										
	2-Wire VG Loop/2-Wire Voice Grade Port (Centrex)Port Combo - Non-Design		2	UEP95		18.01										
	2-Wire VG Loop/2-Wire Voice Grade Port (Centrex)Port Combo - Non-Design		3	UEP95		23.02										
UNE Port/Loop Combination Rates (Design)																
	2-Wire VG Loop/2-Wire Voice Grade Port (Centrex) Port Combo - Design		1	UEP95		18.26										
	2-Wire VG Loop/2-Wire Voice Grade Port (Centrex)Port Combo - Design		2	UEP95		23.33										
	2-Wire VG Loop/2-Wire Voice Grade Port (Centrex)Port Combo - Design		3	UEP95		29.98										
UNE Loop Rate																
	2-Wire Voice Grade Loop (SL 1) - Zone 1		1	UEP95	UECS1	12.48										
	2-Wire Voice Grade Loop (SL 1) - Zone 2		2	UEP95	UECS1	16.31										
	2-Wire Voice Grade Loop (SL 1) - Zone 3		3	UEP95	UECS1	21.32										
	2-Wire Voice Grade Loop (SL 2) - Zone 1		1	UEP95	UECS2	16.56										
	2-Wire Voice Grade Loop (SL 2) - Zone 2		2	UEP95	UECS2	21.63										
	2-Wire Voice Grade Loop (SL 2) - Zone 3		3	UEP95	UECS2	28.28										
UNE Port Rate																
All States																
	2-Wire Voice Grade Port (Centrex) Basic Local Area			UEP95	UEPYA	1.70	22.14	15.25	8.45	3.91		30.89	7.03			

CATEGORY	RATE ELEMENTS	Interim	Zone	BCS	USOC	RATES($) Rec	Nonrecurring First	Nonrecurring Add'l	Nonrecurring Disconnect First	Nonrecurring Disconnect Add'l	Svc Order Submitted Elec per LSR	Svc Order Submitted Manually per LSR	Incremental Charge - Manual Svc Order vs. Electronic-1st	Incremental Charge - Manual Svc Order vs. Electronic-Add'l	Incremental Charge - Manual Svc Order vs. Electronic-Disc 1st	Incremental Charge - Manual Svc Order vs. Electronic-Disc Add'l
											OSS Rates($)					
											SOMEC	SOMAN	SOMAN	SOMAN	SOMAN	SOMAN
	2-Wire Voice Grade Port (Centrex 800 termination)			UEP95	UEPYB	1.70	22.14	15.25	8.45	3.91		30.89	7.03			
	2-Wire Voice Grade Port (Centrex with Caller ID)1Basic Local Area			UEP95	UEPYH	1.70	22.14	15.25	8.45	3.91		30.89	7.03			
	2-Wire Voice Grade Port (Centrex from diff Serving Wire Center)2 Basic Local Area			UEP95	UEPYM	1.70	22.14	15.25	8.45	3.91		30.89	7.03			
	2-Wire Voice Grade Port, Diff Serving Wire Center - 800 Service Term - Basic Local Area			UEP95	UEPYZ	1.70	22.14	15.25	8.45	3.91		30.89	7.03			
	2-Wire Voice Grade Port terminated in on Megalink or equivalent - Basic Local Area			UEP95	UEPY9	1.70	22.14	15.25	8.45	3.91		30.89	7.03			
	2-Wire Voice Grade Port Terminated on 800 Service Term - Basic Local Area			UEP95	UEPY2	1.70	22.14	15.25	8.45	3.91		30.89	7.03			
AL, KY, LA, MS, SC, & TN Only																
	2-Wire Voice Grade Port (Centrex)			UEP95	UEPQA	1.70	22.14	15.25	8.45	3.91		30.89	7.03			
	2-Wire Voice Grade Port (Centrex 800 termination)			UEP95	UEPQB	1.70	22.14	15.25	8.45	3.91		30.89	7.03			
	2-Wire Voice Grade Port (Centrex with Caller ID)1			UEP95	UEPQH	1.70	22.14	15.25	8.45	3.91		30.89	7.03			
	2-Wire Voice Grade Port (Centrex from diff Serving Wire Center)2			UEP95	UEPQM	1.70	22.14	15.25	8.45	3.91		30.89	7.03			
	2-Wire Voice Grade Port, Diff Serving Wire Center - 800 Service Term			UEP95	UEPQZ	1.70	22.14	15.25	8.45	3.91		30.89	7.03			
	2-Wire Voice Grade Port terminated in on Megalink or equivalent			UEP95	UEPQ9	1.70	22.14	15.25	8.45	3.91		30.89	7.03			
	2-Wire Voice Grade Port Terminated on 800 Service Term			UEP95	UEPQ2	1.70	22.14	15.25	8.45	3.91		30.89	7.03			
FL & GA Only																
Local Switching																
	Centrex Intercom Funtionality, per port			UEP95	URECS	0.6381										
Local Number Portability																
	Local Number Portability (1 per port)			UEP95	LNPCC	0.35										
Features																
	All Standard Features Offered, per port			UEP95	UEPVF	0.00						30.89	7.03			
	All Select Features Offered, per port			UEP95	UEPVS	0.00	433.78					30.89	7.03			
	All Centrex Control Features Offered, per port			UEP95	UEPVC	0.00						30.89	7.03			
NARS																
	Unbundled Network Access Register - Combination			UEP95	UARCX	0.00	0.00	0.00				30.89	7.03			
	Unbundled Network Access Register - Indial			UEP95	UAR1X	0.00	0.00	0.00				30.89	7.03			
	Unbundled Network Access Register - Outdial			UEP95	UAROX	0.00	0.00	0.00				30.89	7.03			
Miscellaneous Terminations																
2-Wire Trunk Side																
	Trunk Side Terminations, each			UEP95	CEND6	8.78	47.75	47.01	9.21	8.47		30.89	7.03			
4-Wire Digital (1.544 Megabits)																
	DS1 Circuit Terminations, each			UEP95	M1HD1	35.55	75.93	38.15				30.89	7.03			
	DS0 Channels Activated, each			UEP95	M1HDO	0.00	108.67					30.89	7.03			
Interoffice Channel Mileage - 2-Wire																
	Interoffice Channel Facilities Termination			UEP95	MIGBC	18.58	22.14	15.25	8.45	3.91		30.89	7.03			
	Interoffice Channel mileage, per mile or fraction of mile			UEP95	MIGBM	0.0174										
Feature Activations (DS0) Centrex Loops on Channelized DS1 Service																
D4 Channel Bank Feature Activations																
	Feature Activation on D-4 Channel Bank Centrex Loop Slot			UEP95	1PQWS	0.66										
	Feature Activation on D-4 Channel Bank FX line Side Loop Slot			UEP95	1PQW6	0.66										
	Feature Activation on D-4 Channel Bank FX Trunk Side Loop Slot			UEP95	1PQW7	0.66										
	Feature Activation on D-4 Channel Bank Centrex Loop Slot - Different Wire Center			UEP95	1PQWP	0.66										
	Feature Activation on D-4 Channel Bank Private Line Loop Slot			UEP95	1PQWV	0.66										
	Feature Activation on D-4 Channel Bank Tjie Line/Trunk Loop Slot			UEP95	1PQWQ	0.66										
	Feature Activation on D-4 Channel Bank WATS Loop Slot			UEP95	1PQWA	0.66										
Non-Recurring Charges (NRC) Associated with UNE-P Centrex																

CATEGORY	RATE ELEMENTS	Interim	Zone	BCS	USOC	RATES($) Rec	Nonrecurring First	Nonrecurring Add'l	Nonrecurring Disconnect First	Nonrecurring Disconnect Add'l	Svc Order Submitted Elec per LSR	Svc Order Submitted Manually per LSR	Incremental Charge - Manual Svc Order vs. Electronic-1st	Incremental Charge - Manual Svc Order vs. Electronic-Add'l	Incremental Charge - Manual Svc Order vs. Electronic-Disc 1st	Incremental Charge - Manual Svc Order vs. Electronic-Disc Add'l
											OSS Rates($)					
											SOMEC	SOMAN	SOMAN	SOMAN	SOMAN	SOMAN
	NRC Conversion Currently Combined Switch-As-Is with allowed changes, per port			UEP95	USAC2		1.03	0.29				30.89	7.03			
	New Centrex Standard Common Block			UEP95	M1ACS	0.00	658.60					30.89	7.03			
	New Centrex Customized Common Block			UEP95	M1ACC	0.00	658.60					30.89	7.03			
	NAR Establishment Charge, Per Occasion			UEP95	URECA	0.00	68.57					30.89	7.03			
UNE-P CENTREX - DMS100 (Valid in All States)																
2-Wire VG Loop/2-Wire Voice Grade Port (Centrex) Combo																
UNE Port/Loop Combination Rates (Non-Design)																
	2-Wire VG Loop/2-Wire Voice Grade Port (Centrex) Port Combo - Non-Design		1	UEP9D		14.18										
	2-Wire VG Loop/2-Wire Voice Grade Port (Centrex)Port Combo - Non-Design		2	UEP9D		18.01										
	2-Wire VG Loop/2-Wire Voice Grade Port (Centrex)Port Combo - Non-Design		3	UEP9D		23.02										
UNE Port/Loop Combination Rates (Design)																
	2-Wire VG Loop/2-Wire Voice Grade Port (Centrex) Port Combo - Design		1	UEP9D		18.26										
	2-Wire VG Loop/2-Wire Voice Grade Port (Centrex)Port Combo - Design		2	UEP9D		23.33										
	2-Wire VG Loop/2-Wire Voice Grade Port (Centrex)Port Combo - Design		3	UEP9D		29.98										
UNE Loop Rate																
	2-Wire Voice Grade Loop (SL 1) - Zone 1		1	UEP9D	UECS1	12.48										
	2-Wire Voice Grade Loop (SL 1) - Zone 2		2	UEP9D	UECS1	16.31										
	2-Wire Voice Grade Loop (SL 1) - Zone 3		3	UEP9D	UECS1	21.32										
	2-Wire Voice Grade Loop (SL 2) - Zone 1		1	UEP9D	UECS2	16.56										
	2-Wire Voice Grade Loop (SL 2) - Zone 2		2	UEP9D	UECS2	21.63										
	2-Wire Voice Grade Loop (SL 2) - Zone 3		3	UEP9D	UECS2	28.28										
UNE Port Rate																
ALL STATES																
	2-Wire Voice Grade Port (Centrex) Basic Local Area			UEP9D	UEPYA	1.70	22.14	15.25	8.45	3.91		30.89	7.03			
	2-Wire Voice Grade Port (Centrex 800 termination)Basic Local Area			UEP9D	UEPYB	1.70	22.14	15.25	8.45	3.91		30.89	7.03			
	2-Wire Voice Grade Port (Centrex / EBS-PSET)3Basic Local Area			UEP9D	UEPYC	1.70	22.14	15.25	8.45	3.91		30.89	7.03			
	2-Wire Voice Grade Port (Centrex / EBS-M5009)3Basic Local Area			UEP9D	UEPYD	1.70	22.14	15.25	8.45	3.91		30.89	7.03			
	2-Wire Voice Grade Port (Centrex / EBS-M5209))3 Basic Local Area			UEP9D	UEPYE	1.70	22.14	15.25	8.45	3.91		30.89	7.03			
	2-Wire Voice Grade Port (Centrex / EBS-M5112))3 Basic Local Area			UEP9D	UEPYF	1.70	22.14	15.25	8.45	3.91		30.89	7.03			
	2-Wire Voice Grade Port (Centrex / EBS-M5312))3Basic Local Area			UEP9D	UEPYG	1.70	22.14	15.25	8.45	3.91		30.89	7.03			
	2-Wire Voice Grade Port (Centrex / EBS-M5008))3 Basic Local Area			UEP9D	UEPYT	1.70	22.14	15.25	8.45	3.91		30.89	7.03			
	2-Wire Voice Grade Port (Centrex / EBS-M5208))3 Basic Local Area			UEP9D	UEPYU	1.70	22.14	15.25	8.45	3.91		30.89	7.03			
	2-Wire Voice Grade Port (Centrex / EBS-M5216))3 Basic Local Area			UEP9D	UEPYV	1.70	22.14	15.25	8.45	3.91		30.89	7.03			
	2-Wire Voice Grade Port (Centrex / EBS-M5316))3 Basic Local Area			UEP9D	UEPY3	1.70	22.14	15.25	8.45	3.91		30.89	7.03			
	2-Wire Voice Grade Port (Centrex with Caller ID) Basic Local Area			UEP9D	UEPYH	1.70	22.14	15.25	8.45	3.91		30.89	7.03			
	2-Wire Voice Grade Port (Centrex/Caller ID/Msg Wtg Lamp Indication))3 Basic Local Area			UEP9D	UEPYW	1.70	22.14	15.25	8.45	3.91		30.89	7.03			
	2-Wire Voice Grade Port (Centrex/Msg Wtg Lamp Indication))3 Basic Local Area			UEP9D	UEPYJ	1.70	22.14	15.25	8.45	3.91		30.89	7.03			
	2-Wire Voice Grade Port (Centrex from diff Serving Wire Center) 2 Basic Local Area			UEP9D	UEPYM	1.70	22.14	15.25	8.45	3.91		30.89	7.03			

CATEGORY		RATE ELEMENTS	Interim	Zone	BCS	USOC	RATES($)					Svc Order Submitted Elec per LSR	Svc Order Submitted Manually per LSR	Incremental Charge - Manual Svc Order vs. Electronic-1st	Incremental Charge - Manual Svc Order vs. Electronic-Add'l	Incremental Charge - Manual Svc Order vs. Electronic-Disc 1st	Incremental Charge - Manual Svc Order vs. Electronic-Disc Add'l
							Rec	Nonrecurring		Nonrecurring Disconnect		OSS Rates($)					
								First	Add'l	First	Add'l	SOMEC	SOMAN	SOMAN	SOMAN	SOMAN	SOMAN
		2-Wire Voice Grade Port (Centrex/differ SWC /EBS-PSET)2, 3 Basic Local Area			UEP9D	UEPYO	1.70	22.14	15.25	8.45	3.91		30.89	7.03			
		2-Wire Voice Grade Port (Centrex/differ SWC /EBS-M5009)2, 3 Basic Local Area			UEP9D	UEPYP	1.70	22.14	15.25	8.45	3.91		30.89	7.03			
		2-Wire Voice Grade Port (Centrex/differ SWC /EBS-5209)2, 3 Basic Local Area			UEP9D	UEPYQ	1.70	22.14	15.25	8.45	3.91		30.89	7.03			
		2-Wire Voice Grade Port (Centrex/differ SWC /EBS-M5112)2, 3 Basic Local Area			UEP9D	UEPYR	1.70	22.14	15.25	8.45	3.91		30.89	7.03			
		2-Wire Voice Grade Port (Centrex/differ SWC /EBS-M5312)2, 3 Basic Local Area			UEP9D	UEPYS	1.70	22.14	15.25	8.45	3.91		30.89	7.03			
		2-Wire Voice Grade Port (Centrex/differ SWC /EBS-M5008)2, 3 Basic Local Area			UEP9D	UEPY4	1.70	22.14	15.25	8.45	3.91		30.89	7.03			
		2-Wire Voice Grade Port (Centrex/differ SWC /EBS-M5208)2, 3 Basic Local Area			UEP9D	UEPY5	1.70	22.14	15.25	8.45	3.91		30.89	7.03			
		2-Wire Voice Grade Port (Centrex/differ SWC /EBS-M5216)2, 3 Basic Local Area			UEP9D	UEPY6	1.70	22.14	15.25	8.45	3.91		30.89	7.03			
		2-Wire Voice Grade Port (Centrex/differ SWC /EBS-M5316)2, 3 Basic Local Area			UEP9D	UEPY7	1.70	22.14	15.25	8.45	3.91		30.89	7.03			
		2-Wire Voice Grade Port, Diff Serving Wire Center - 800 Service Term			UEP9D	UEPYZ	1.70	22.14	15.25	8.45	3.91		30.89	7.03			
		2-Wire Voice Grade Port terminated in on Megalink or equivalent Basic Local Area			UEP9D	UEPY9	1.70	22.14	15.25	8.45	3.91		30.89	7.03			
		2-Wire Voice Grade Port Terminated on 800 Service Term Basic Local Area			UEP9D	UEPY2	1.70	22.14	15.25	8.45	3.91		30.89	7.03			
	AL, KY, LA, MS, SC, & TN Only																
		2-Wire Voice Grade Port (Centrex)			UEP9D	UEPQA	1.70	22.14	15.25	8.45	3.91		30.89	7.03			
		2-Wire Voice Grade Port (Centrex 800 termination)			UEP9D	UEPQB	1.70	22.14	15.25	8.45	3.91		30.89	7.03			
		2-Wire Voice Grade Port (Centrex / EBS-PSET)3			UEP9D	UEPQC	1.70	22.14	15.25	8.45	3.91		30.89	7.03			
		2-Wire Voice Grade Port (Centrex / EBS-M5009)3			UEP9D	UEPQD	1.70	22.14	15.25	8.45	3.91		30.89	7.03			
		2-Wire Voice Grade Port (Centrex / EBS-M5209)3			UEP9D	UEPQE	1.70	22.14	15.25	8.45	3.91		30.89	7.03			
		2-Wire Voice Grade Port (Centrex / EBS-M5112)3			UEP9D	UEPQF	1.70	22.14	15.25	8.45	3.91		30.89	7.03			
		2-Wire Voice Grade Port (Centrex / EBS-M5312)3			UEP9D	UEPQG	1.70	22.14	15.25	8.45	3.91		30.89	7.03			
		2-Wire Voice Grade Port (Centrex / EBS-M5008)3			UEP9D	UEPQT	1.70	22.14	15.25	8.45	3.91		30.89	7.03			
		2-Wire Voice Grade Port (Centrex / EBS-M5208)3			UEP9D	UEPQU	1.70	22.14	15.25	8.45	3.91		30.89	7.03			
		2-Wire Voice Grade Port (Centrex / EBS-M5216)3			UEP9D	UEPQV	1.70	22.14	15.25	8.45	3.91		30.89	7.03			
		2-Wire Voice Grade Port (Centrex / EBS-M5316)3			UEP9D	UEPQ3	1.70	22.14	15.25	8.45	3.91		30.89	7.03			
		2-Wire Voice Grade Port (Centrex with Caller ID)			UEP9D	UEPQH	1.70	22.14	15.25	8.45	3.91		30.89	7.03			
		2-Wire Voice Grade Port (Centrex/Caller ID/Msg Wtg Lamp Indication)3			UEP9D	UEPQW	1.70	22.14	15.25	8.45	3.91		30.89	7.03			
		2-Wire Voice Grade Port (Centrex/Msg Wtg Lamp Indication)3			UEP9D	UEPQJ	1.70	22.14	15.25	8.45	3.91		30.89	7.03			
		2-Wire Voice Grade Port (Centrex from diff Serving Wire Center) 2			UEP9D	UEPQM	1.70	22.14	15.25	8.45	3.91		30.89	7.03			
		2-Wire Voice Grade Port (Centrex/differ SWC /EBS-PSET)2, 3			UEP9D	UEPQO	1.70	22.14	15.25	8.45	3.91		30.89	7.03			
		2-Wire Voice Grade Port (Centrex/differ SWC /EBS-M5009)2, 3			UEP9D	UEPQP	1.70	22.14	15.25	8.45	3.91		30.89	7.03			
		2-Wire Voice Grade Port (Centrex/differ SWC /EBS-5209)2, 3			UEP9D	UEPQQ	1.70	22.14	15.25	8.45	3.91		30.89	7.03			
		2-Wire Voice Grade Port (Centrex/differ SWC /EBS-M5112)2, 3			UEP9D	UEPQR	1.70	22.14	15.25	8.45	3.91		30.89	7.03			
		2-Wire Voice Grade Port (Centrex/differ SWC /EBS-M5312)2, 3			UEP9D	UEPQS	1.70	22.14	15.25	8.45	3.91		30.89	7.03			
		2-Wire Voice Grade Port (Centrex/differ SWC /EBS-M5008)2, 3			UEP9D	UEPQ4	1.70	22.14	15.25	8.45	3.91		30.89	7.03			
		2-Wire Voice Grade Port (Centrex/differ SWC /EBS-M5208)2, 3			UEP9D	UEPQ5	1.70	22.14	15.25	8.45	3.91		30.89	7.03			
		2-Wire Voice Grade Port (Centrex/differ SWC /EBS-M5216)2, 3			UEP9D	UEPQ6	1.70	22.14	15.25	8.45	3.91		30.89	7.03			
		2-Wire Voice Grade Port (Centrex/differ SWC /EBS-M5316)2, 3			UEP9D	UEPQ7	1.70	22.14	15.25	8.45	3.91		30.89	7.03			

UNBUNDLED NETWORK ELEMENTS - Tennessee														Attachment: 2		Exhibit: B	
CATEGORY	RATE ELEMENTS	Interim	Zone	BCS	USOC	RATES($)					Svc Order Submitted Elec per LSR	Svc Order Submitted Manually per LSR	Incremental Charge - Manual Svc Order vs. Electronic-1st	Incremental Charge - Manual Svc Order vs. Electronic-Add'l	Incremental Charge - Manual Svc Order vs. Electronic-Disc 1st	Incremental Charge - Manual Svc Order vs. Electronic-Disc Add'l
						Rec	Nonrecurring		Nonrecurring Disconnect		OSS Rates($)					
							First	Add'l	First	Add'l	SOMEC	SOMAN	SOMAN	SOMAN	SOMAN	SOMAN
	2-Wire Voice Grade Port, Diff Serving Wire Center - 800 Service Term			UEP9D	UEPQZ	1.70	22.14	15.25	8.45	3.91		30.89	7.03			
	2-Wire Voice Grade Port terminated in on Megalink or equivalent			UEP9D	UEPQ9	1.70	22.14	15.25	8.45	3.91		30.89	7.03			
	2-Wire Voice Grade Port Terminated on 800 Service Term			UEP9D	UEPQ2	1.70	22.14	15.25	8.45	3.91		30.89	7.03			
Local Switching																
	Centrex Intercom Funtionality, per port			UEP9D	URECS	0.6381										
Local Number Portability																
	Local Number Portability (1 per port)			UEP9D	LNPCC	0.35										
Features																
	All Standard Features Offered, per port			UEP9D	UEPVF	0.00						30.89	7.03			
	All Select Features Offered, per port			UEP9D	UEPVS	0.00	433.78					30.89	7.03			
	All Centrex Control Features Offered, per port			UEP9D	UEPVC	0.00						30.89	7.03			
NARS																
	Unbundled Network Access Register - Combination			UEP9D	UARCX	0.00	0.00	0.00				30.89	7.03			
	Unbundled Network Access Register - Inward			UEP9D	UAR1X	0.00	0.00	0.00				30.89	7.03			
	Unbundled Network Access Register - Outdial			UEP9D	UAROX	0.00	0.00	0.00				30.89	7.03			
Miscellaneous Terminations																
2-Wire Trunk Side																
	Trunk Side Terminations, each			UEP9D	CEND6	8.78	22.14	15.25	8.45	3.91		30.89	7.03			
4-Wire Digital (1.544 Megabits)																
	DS1 Circuit Terminations, each			UEP9D	M1HD1	35.55	75.93	38.15				30.89	7.03			
	DS0 Channels Activiated per Channel			UEP9D	M1HDO	0.00	108.67					30.89	7.03			
Interoffice Channel Mileage - 2-Wire																
	Interoffice Channel Facilities Termination			UEP9D	MIGBC	18.58	22.14	15.25	8.45	3.91		30.89	7.03			
	Interoffice Channel mileage, per mile or fraction of mile			UEP9D	MIGBM	0.0174										
Feature Activations (DS0) Centrex Loops on Channelized DS1 Service																
D4 Channel Bank Feature Activations																
	Feature Activation on D-4 Channel Bank Centrex Loop Slot			UEP9D	1PQWS	0.66										
	Feature Activation on D-4 Channel Bank FX line Side Loop Slot			UEP9D	1PQW6	0.66										
	Feature Activation on D-4 Channel Bank FX Trunk Side Loop Slot			UEP9D	1PQW7	0.66										
	Feature Activation on D-4 Channel Bank Centrex Loop Slot - Different Wire Center			UEP9D	1PQWP	0.66										
	Feature Activation on D-4 Channel Bank Private Line Loop Slot			UEP9D	1PQWV	0.66										
	Feature Activation on D-4 Channel Bank Tjie Line/Trunk Loop Slot			UEP9D	1PQWQ	0.66										
	Feature Activation on D-4 Channel Bank WATS Loop Slot			UEP9D	1PQWA	0.66										
Non-Recurring Charges (NRC) Associated with UNE-P Centrex																
	NRC Conversion Currently Combined Switch-As-Is with allowed changes, per port			UEP9D	USAC2		1.03	0.29				30.89	7.03			
	New Centrex Standard Common Block			UEP9D	M1ACS	0.00	658.60					30.89	7.03			
	New Centrex Customized Common Block			UEP9D	M1ACC	0.00	658.60					30.89	7.03			
	NAR Establishment Charge, Per Occasion			UEP9D	URECA		68.57					30.89	7.03			
UNE-P CENTREX - EWSD (Valid in AL, FL, KY, LA, MS & TN)																
2-Wire VG Loop/2-Wire Voice Grade Port (Centrex) Combo																
UNE Port/Loop Combination Rates (Non-Design)																
	2-Wire VG Loop/2-Wire Voice Grade Port (Centrex) Port Combo - Non-Design		1	UEP9E		14.18										
	2-Wire VG Loop/2-Wire Voice Grade Port (Centrex)Port Combo - Non-Design		2	UEP9E		18.01										
	2-Wire VG Loop/2-Wire Voice Grade Port (Centrex)Port Combo - Non-Design		3	UEP9E		23.02										
UNE Port/Loop Combination Rates (Design)																
	2-Wire VG Loop/2-Wire Voice Grade Port (Centrex) Port Combo - Design		1	UEP9E		18.26										

UNBUNDLED NETWORK ELEMENTS - Tennessee													Attachment: 2		Exhibit: B	
CATEGORY	RATE ELEMENTS	Interim	Zone	BCS	USOC	RATES($)					Svc Order Submitted Elec per LSR	Svc Order Submitted Manually per LSR	Incremental Charge - Manual Svc Order vs. Electronic-1st	Incremental Charge - Manual Svc Order vs. Electronic-Add'l	Incremental Charge - Manual Svc Order vs. Electronic-Disc 1st	Incremental Charge - Manual Svc Order vs. Electronic-Disc Add'l
						Rec	Nonrecurring		Nonrecurring Disconnect		OSS Rates($)					
							First	Add'l	First	Add'l	SOMEC	SOMAN	SOMAN	SOMAN	SOMAN	SOMAN
	2-Wire VG Loop/2-Wire Voice Grade Port (Centrex)Port Combo - Design		2	UEP9E		23.33										
	2-Wire VG Loop/2-Wire Voice Grade Port (Centrex)Port Combo - Design		3	UEP9E		29.98										
UNE Loop Rate																
	2-Wire Voice Grade Loop (SL 1) - Zone 1		1	UEP9E	UECS1	12.48										
	2-Wire Voice Grade Loop (SL 1) - Zone 2		2	UEP9E	UECS1	16.31										
	2-Wire Voice Grade Loop (SL 1) - Zone 3		3	UEP9E	UECS1	21.32										
	2-Wire Voice Grade Loop (SL 2) - Zone 1		1	UEP9E	UECS2	16.56										
	2-Wire Voice Grade Loop (SL 2) - Zone 2		2	UEP9E	UECS2	21.63										
	2-Wire Voice Grade Loop (SL 2) - Zone 3		3	UEP9E	UECS2	28.28										
UNE Port Rate																
AL, FL, KY, LA, MS, & TN only																
	2-Wire Voice Grade Port (Centrex) Basic Local Area			UEP9E	UEPYA	1.70	22.14	15.25	8.45	3.91		30.89	7.03			
	2-Wire Voice Grade Port (Centrex 800 termination)Basic Local Area			UEP9E	UEPYB	1.70	22.14	15.25	8.45	3.91		30.89	7.03			
	2-Wire Voice Grade Port (Centrex with Caller ID)1Basic Local Area			UEP9E	UEPYH	1.70	22.14	15.25	8.45	3.91		30.89	7.03			
	2-Wire Voice Grade Port (Centrex from diff Serving Wire Center)2 Basic Local Area			UEP9E	UEPYM	1.70	22.14	15.25	8.45	3.91		30.89	7.03			
	2-Wire Voice Grade Port, Diff Serving Wire Center - 800 Service Term - Basic Local Area			UEP9E	UEPYZ	1.70	22.14	15.25	8.45	3.91		30.89	7.03			
	2-Wire Voice Grade Port terminated in on Megalink or equivalent - Basic Local Area			UEP9E	UEPY9	1.70	22.14	15.25	8.45	3.91		30.89	7.03			
	2-Wire Voice Grade Port Terminated on 800 Service Term - Basic Local Area			UEP9E	UEPY2	1.70	22.14	15.25	8.45	3.91		30.89	7.03			
AL, KY, LA, MS, & TN Only																
	2-Wire Voice Grade Port (Centrex)			UEP9E	UEPQA	1.70	22.14	15.25	8.45	3.91		30.89	7.03			
	2-Wire Voice Grade Port (Centrex 800 termination)			UEP9E	UEPQB	1.70	22.14	15.25	8.45	3.91		30.89	7.03			
	2-Wire Voice Grade Port (Centrex with Caller ID)1			UEP9E	UEPQH	1.70	22.14	15.25	8.45	3.91		30.89	7.03			
	2-Wire Voice Grade Port (Centrex from diff Serving Wire Center)2			UEP9E	UEPQM	1.70	22.14	15.25	8.45	3.91		30.89	7.03			
	2-Wire Voice Grade Port, Diff Serving Wire Center - 800 Service Term			UEP9E	UEPQZ	1.70	22.14	15.25	8.45	3.91		30.89	7.03			
	2-Wire Voice Grade Port terminated in on Megalink or equivalent			UEP9E	UEPQ9	1.70	22.14	15.25	8.45	3.91		30.89	7.03			
	2-Wire Voice Grade Port Terminated on 800 Service Term			UEP9E	UEPQ2	1.70	22.14	15.25	8.45	3.91		30.89	7.03			
Local Switching																
	Centrex Intercom Funtionality, per port			UEP9E	URECS	0.6381										
Local Number Portability																
	Local Number Portability (1 per port)			UEP9E	LNPCC	0.35										
Features																
	All Standard Features Offered, per port			UEP9E	UEPVF	0.00						30.89	7.03			
	All Select Features Offered, per port			UEP9E	UEPVS	0.00	433.78					30.89	7.03			
	All Centrex Control Features Offered, per port			UEP9E	UEPVC	0.00						30.89	7.03			
NARS																
	Unbundled Network Access Register - Combination			UEP9E	UARCX	0.00	0.00	0.00				30.89	7.03			
	Unbundled Network Access Register - Indial			UEP9E	UAR1X	0.00	0.00	0.00				30.89	7.03			
	Unbundled Network Access Register - Outdial			UEP9E	UAROX	0.00	0.00	0.00				30.89	7.03			
Miscellaneous Terminations																
2-Wire Trunk Side																
	Trunk Side Terminations, each			UEP9E	CEND6	8.78	22.14	15.25	8.45	3.91		30.89	7.03			
4-Wire Digital (1.544 Megabits)																
	DS1 Circuit Terminations, each			UEP9E	M1HD1	35.55	75.93	38.15				30.89	7.03			
	DS0 Channel Activated Per Channel			UEP9E	M1HDO	0.00	108.67					30.89	7.03			
Interoffice Channel Mileage - 2-Wire																
	Interoffice Channel Facilities Termination			UEP9E	MIGBC	18.58	22.14	15.25	8.45	3.91		30.89	7.03			
	Interoffice Channel mileage, per mile or fraction of mile			UEP9E	MIGBM	0.0174										
Feature Activations (DS0) Centrex Loops on Channelized DS1 Service																

CATEGORY	RATE ELEMENTS	Interim	Zone	BCS	USOC	RATES($)					Svc Order Submitted Elec per LSR	Svc Order Submitted Manually per LSR	Incremental Charge - Manual Svc Order vs. Electronic-1st	Incremental Charge - Manual Svc Order vs. Electronic-Add'l	Incremental Charge - Manual Svc Order vs. Electronic-Disc 1st	Incremental Charge - Manual Svc Order vs. Electronic-Disc Add'l
						Rec	Nonrecurring		Nonrecurring Disconnect		OSS Rates($)					
							First	Add'l	First	Add'l	SOMEC	SOMAN	SOMAN	SOMAN	SOMAN	SOMAN
D4 Channel Bank Feature Activations																
	Feature Activation on D-4 Channel Bank Centrex Loop Slot			UEP9E	1PQWS	0.66										
	Feature Activation on D-4 Channel Bank FX line Side Loop Slot			UEP9E	1PQW6	0.66										
	Feature Activation on D-4 Channel Bank FX Trunk Side Loop Slot			UEP9E	1PQW7	0.66										
	Feature Activation on D-4 Channel Bank Centrex Loop Slot - Different Wire Center			UEP9E	1PQWP	0.66										
	Feature Activation on D-4 Channel Bank Private Line Loop Slot			UEP9E	1PQWV	0.66										
	Feature Activation on D-4 Channel Bank Tjie Line/Trunk Loop Slot			UEP9E	1PQWQ	0.66										
	Feature Activation on D-4 Channel Bank WATS Loop Slot			UEP9E	1PQWA	0.66										
Non-Recurring Charges (NRC) Associated with UNE-P Centrex																
	NRC Conversion Currently Combined Switch-As-Is with allowed changes, per port			UEP9E	USAC2		1.03	0.29				30.89	7.03			
	New Centrex Standard Common Block			UEP9E	M1ACS	0.00	658.60					30.89	7.03			
	New Centrex Customized Common Block			UEP9E	M1ACC	0.00	658.60					30.89	7.03			
	NAR Establishment Charge, Per Occasion			UEP9E	URECA	0.00	68.57					30.89	7.03			
UNE-P CENTREX - DCO - Valid in AL, KY, LA, MS, & TN)																
2-Wire VG Loop/2-Wire Voice Grade Port (Centrex) Combo																
UNE Port/Loop Combination Rates (Non-Design)																
	2-Wire VG Loop/2-Wire Voice Grade Port (Centrex) Port Combo - Non-Design		1	UEP93		14.18										
	2-Wire VG Loop/2-Wire Voice Grade Port (Centrex)Port Combo - Non-Design		2	UEP93		18.01										
	2-Wire VG Loop/2-Wire Voice Grade Port (Centrex)Port Combo - Non-Design		3	UEP93		23.02										
UNE Port/Loop Combination Rates (Design)																
	2-Wire VG Loop/2-Wire Voice Grade Port (Centrex) Port Combo - Design		1	UEP93		18.26										
	2-Wire VG Loop/2-Wire Voice Grade Port (Centrex)Port Combo - Design		2	UEP93		23.33										
	2-Wire VG Loop/2-Wire Voice Grade Port (Centrex)Port Combo - Design		3	UEP93		29.98										
UNE Loop Rate																
	2-Wire Voice Grade Loop (SL 1) - Zone 1		1	UEP93	UECS1	12.48										
	2-Wire Voice Grade Loop (SL 1) - Zone 2		2	UEP93	UECS1	16.31										
	2-Wire Voice Grade Loop (SL 1) - Zone 3		3	UEP93	UECS1	21.32										
	2-Wire Voice Grade Loop (SL 2) - Zone 1		1	UEP93	UECS2	16.56										
	2-Wire Voice Grade Loop (SL 2) - Zone 2		2	UEP93	UECS2	21.63										
	2-Wire Voice Grade Loop (SL 2) - Zone 3		3	UEP93	UECS2	28.28										
UNE Port Rate																
AL, KY, LA, MS, & TN only																
	2-Wire Voice Grade Port (Centrex) Basic Local Area			UEP93	UEPYA	1.70	22.14	15.25	8.45	3.91		30.89	7.03			
	2-Wire Voice Grade Port (Centrex 800 termination)Basic Local Area			UEP93	UEPYB	1.70	22.14	15.25	8.45	3.91		30.89	7.03			
	2-Wire Voice Grade Port (Centrex with Caller ID)1Basic Local Area			UEP93	UEPYH	1.70	22.14	15.25	8.45	3.91		30.89	7.03			
	2-Wire Voice Grade Port (Centrex from diff Serving Wire Center)2 Basic Local Area			UEP93	UEPYM	1.70	22.14	15.25	8.45	3.91		30.89	7.03			
	2-Wire Voice Grade Port, Diff Serving Wire Center - 800 Service Term - Basic Local Area			UEP93	UEPYZ	1.70	22.14	15.25	8.45	3.91		30.89	7.03			
	2-Wire Voice Grade Port terminated in on Megalink or equivalent - Basic Local Area			UEP93	UEPY9	1.70	22.14	15.25	8.45	3.91		30.89	7.03			
	2-Wire Voice Grade Port Terminated on 800 Service Term - Basic Local Area			UEP93	UEPY2	1.70	22.14	15.25	8.45	3.91		30.89	7.03			
	2-Wire Voice Grade Port (Centrex)			UEP93	UEPQA	1.70	22.14	15.25	8.45	3.91		30.89	7.03			
	2-Wire Voice Grade Port (Centrex 800 termination)			UEP93	UEPQB	1.70	22.14	15.25	8.45	3.91		30.89	7.03			

UNBUNDLED NETWORK ELEMENTS - Tennessee													Attachment: 2		Exhibit: B	
CATEGORY	RATE ELEMENTS	Interim	Zone	BCS	USOC	RATES($)					Svc Order Submitted Elec per LSR	Svc Order Submitted Manually per LSR	Incremental Charge - Manual Svc Order vs. Electronic-1st	Incremental Charge - Manual Svc Order vs. Electronic-Add'l	Incremental Charge - Manual Svc Order vs. Electronic-Disc 1st	Incremental Charge - Manual Svc Order vs. Electronic-Disc Add'l
						Rec	Nonrecurring		Nonrecurring Disconnect		OSS Rates($)					
							First	Add'l	First	Add'l	SOMEC	SOMAN	SOMAN	SOMAN	SOMAN	SOMAN
	2-Wire Voice Grade Port (Centrex with Caller ID)1			UEP93	UEPQH	1.70	22.14	15.25	8.45	3.91		30.89	7.03			
	2-Wire Voice Grade Port (Centrex from diff Serving Wire Center)2			UEP93	UEPQM	1.70	22.14	15.25	8.45	3.91		30.89	7.03			
	2-Wire Voice Grade Port, Diff Serving Wire Center - 800 Service Term			UEP93	UEPQZ	1.70	22.14	15.25	8.45	3.91		30.89	7.03			
	2-Wire Voice Grade Port terminated in on Megalink or equivalent			UEP93	UEPQ9	1.70	22.14	15.25	8.45	3.91		30.89	7.03			
	2-Wire Voice Grade Port Terminated on 800 Service Term			UEP93	UEPQ2	1.70	22.14	15.25	8.45	3.91		30.89	7.03			
Local Switching																
	Centrex Intercom Funtionality, per port			UEP93	URECS	0.6381										
Local Number Portability																
	Local Number Portability (1 per port)			UEP93	LNCCC	0.35										
Features																
	All Standard Features Offered, per port			UEP93	UEPVF	0.00										
	All Centrex Control Features Offered, per port			UEP93	UEPVC	0.00										
NARS																
	Unbundled Network Access Register - Combination			UEP93	UARCX	0.00	0.00	0.00				30.89	7.03			
	Unbundled Network Access Register - Indial			UEP93	UAR1X	0.00	0.00	0.00				30.89	7.03			
	Unbundled Network Access Register - Outdial			UEP93	UAROX	0.00	0.00	0.00				30.89	7.03			
Miscellaneous Terminations																
2-Wire Trunk Side																
	Trunk Side Terminations, each			UEP93	CEND6	8.78	22.14	15.25	8.45	3.91		30.89	7.03			
4-Wire Digital (1.544 Megabits)																
	DS1 Circuit Terminations, each			UEP93	M1HD1	35.55	75.93	38.15				30.89	7.03			
	DS0 Channels Activated, Per Channel			UEP93	M1HDO	0.00	108.67					30.89	7.03			
Interoffice Channel Mileage - 2-Wire																
	Interoffice Channel Facilities Termination			UEP93	MIGBC	18.58	22.14	15.25	8.45	3.91		30.89	7.03			
	Interoffice Channel mileage, per mile or fraction of mile			UEP93	MIGBM	0.0174										
Feature Activations (DS0) Centrex Loops on Channelized DS1 Service																
D4 Channel Bank Feature Activations																
	Feature Activation on D-4 Channel Bank Centrex Loop Slot			UEP93	1PQWS	0.66										
	Feature Activation on D-4 Channel Bank FX Line Side Loop Slot			UEP93	1PQW6	0.66										
	Feature Activation on D-4 Channel Bank FX Trunk Side Loop Slot			UEP93	1PQW7	0.66										
	Feature Activation on D-4 Channel Bank Centrex Loop Slot - Different Wire Center			UEP93	1PQWP	0.66										
	Feature Activation on D-4 Channel Bank Private Line Loop Slot			UEP93	1PQWV	0.66										
	Feature Activation on D-4 Channel Bank Tie Line/Trunk Loop Slot			UEP93	1PQWQ	0.66										
	Feature Activation on D-4 Channel Bank WATS Loop Slot			UEP93	1PQWA	0.66										
Non-Recurring Charges (NRC) Associated with UNE-P Centrex																
	NRC Conversion Currently Combined Switch-As-Is with allowed changes, per port			UEP93	USAC2		1.03	0.29				30.89	7.03			
	New Centrex Standard Common Block			UEP93	M1ACS	0.00	658.60					30.89	7.03			
	New Centrex Customized Common Block			UEP93	M1ACC	0.00	658.60					30.89	7.03			
	NAR Establishment Charge, Per Occasion			UEP93	URECA		68.57					30.89	7.03			
Note 1 - Required Port for Centrex Control in 1AESS, 5ESS & EWSD																
Note 2 - Requres Interoffice Channel Mileage																
Note 3 - Requires Specific Customer Premises Equipment																
NOTE: Rates displaying an "R" in Interim column are interim and subject to rate true-up as set forth in General Terms and Conditions.																

ATTACHMENT 3

NETWORK INTERCONNECTION

TABLE OF CONTENTS

1. GENERAL 3

2. DEFINITIONS: (FOR THE PURPOSE OF THIS ATTACHMENT) 3

3. NETWORK INTERCONNECTION 4

4. INTERCONNECTION TRUNK GROUP ARCHITECTURES 6

5. NETWORK DESIGN AND MANAGEMENT FOR INTERCONNECTION 13

6. LOCAL DIALING PARITY 16

7. INTERCONNECTION COMPENSATION 16

8. FRAME RELAY SERVICE INTERCONNECTION 21

9. OPERATIONAL SUPPORT SYSTEMS (OSS) 24

Rates	**Exhibit A**
Basic Architecture	**Exhibit B**
One Way Architecture	**Exhibit C**
Two Way Architecture	**Exhibit D**
Supergroup Architecture	**Exhibit E**

NETWORK INTERCONNECTION

1. GENERAL

1.1 The Parties shall provide interconnection with each other's networks for the transmission and routing of telephone exchange service (local) and exchange access (intraLATA toll and switched access) on the following terms:

2. DEFINITIONS: (FOR THE PURPOSE OF THIS ATTACHMENT)

2.1 For purposes of this attachment only, the following terms shall have the definitions set forth below:

2.1.1 **Call Termination** has the meaning set forth for "termination" in 47CFR § 51.701(d).

2.1.2 **Call Transport** has the meaning set forth for "transport" in 47 CFR § 51.701(c).

2.1.3 **Call Transport and Termination** is used collectively to mean the switching and transport functions from the Interconnection Point to the last point of switching.

2.1.4 **Common (Shared) Transport** is defined as the transport of the originating Party's traffic by the terminating Party over the terminating Party's common (shared) facilities between (1) the terminating Party's tandem switch and end office switch, (2) between the terminating Party's tandem switches, and/or (3) between the terminating Party's host and remote end office switches. All switches referred herein must be entered into the Local Exchange Routing Guide ("LERG").

2.1.5 **Dedicated Interoffice Facility** is defined as a switch transport facility between a Party's Serving Wire Center and the first point of switching on the other Party's common (shared) network.

2.1.6 **End Office Switching** is defined as the function that establishes a communications path between the trunk side and line side of the End Office switch.

2.1.7 **Fiber Meet** is an interconnection arrangement whereby the Parties physically interconnect their networks via an optical fiber interface at which one Party's facilities, provisioning, and maintenance responsibility begins and the other Party's responsibility ends.

2.1.8 **Interconnection Point ("IP")** is the physical telecommunications equipment interface that performs the interconnection function for BellSouth and Talk America.

2.1.9 **ISP-bound Traffic** is as defined in Section 7 of this Attachment.

2.1.10 **Local Channel** is defined as a switched transport facility between a Party's Interconnection Point and it's the IP's Serving Wire Center.

2.1.11 **Local Traffic** is as defined in Section 7 of this Attachment.

2.1.12 **Serving Wire Center** is defined as the wire center owned by one Party from which the other Party would normally obtain dial tone for its IP.

2.1.13 **Tandem Switching** is defined as the function that establishes a communications path between two switching offices through a third switching office through the provision of trunk side to trunk side switching.

2.1.14 **Transit Traffic** is traffic originating on Talk America's network that is switched and/or transported by BellSouth and delivered to a third party's network, or traffic originating on a third Party's network that is switched and/or transported by BellSouth and delivered to Talk America's network.

3. NETWORK INTERCONNECTION

3.1 This Attachment pertains only to the provision of network interconnection where Talk America owns and provides its switch(es).

3.2 Network interconnection may be provided by the Parties at any technically feasible point within BellSouth's network. Requests to BellSouth for interconnection at points other than as set forth in this Attachment may be made through the Bona Fide Request/New Business Request process set out in this Agreement.

3.2.1 Each Party is responsible for providing, engineering and maintaining the network on its side of the IP. The IP must be located within BellSouth's serving territory in the LATA in which local traffic is originating. The IP determines the point at which the originating Party shall pay the terminating Party for the Call Transport and Termination of that traffic.

3.2.1.1 When first establishing the interconnection arrangement in each LATA, the location of the IP shall be established by mutual agreement of the Parties. In selecting the IP, both Parties will act in good faith and select the point which is most efficient for both Parties. If the Parties are unable to agree on the location of the IP, each Party will designate IPs for its originated traffic. Additional IP(s) in a particular LATA may be established by mutual agreement of the Parties. If the Parties are unable to agree to additional IPs, each Party will designate the IP for its originated traffic. When the Parties agree to utilize two-way interconnection trunk groups for the exchange of Local Traffic, the Parties must agree to the location of the IP(s).

3.2.1.2 BellSouth agrees that Interconnection must be provided in a competitively neutral fashion, at any technically feasible point within its network as stated in this Agreement and that such interconnection must contain all the same features,

functions and capabilities, and be at least equal in quality to the level provided by BellSouth to itself, its Affiliates, and other telecommunications carriers.

3.3 **Interconnection via Dedicated Facilities**

3.3.1 **Local Channel Facilities.** As part of network interconnection, the originating Party may obtain Local Channel facilities from the terminating Party. The portion of Local Channel facilities utilized for Local Traffic shall be determined based upon the application of the Percent Local Facility (PLF) Factor. The charges applied to the portion of the Local Channel used for Local Traffic as determined by the PLF are as set forth in Exhibit A to this Attachment.

3.3.2 **Dedicated Interoffice Facilities.** As a part of network interconnection, the originating Party may obtain Dedicated Interoffice Facilities. The portion of Dedicated Interoffice Facilities utilized for Local Traffic shall be determined based upon the application of the Percent Local Facility (PLF) Factor. The charges applied to the portion of the Dedicated Interoffice Facility used for Local Traffic as determined by the PLF are as set forth in Exhibit A to this Attachment.

3.4 **Fiber Meet**

3.4.1 If Talk America elects to interconnect with BellSouth pursuant to a Fiber Meet, Talk America and BellSouth shall jointly engineer, operate and maintain a Synchronous Optical Network ("SONET") transmission system by which they shall interconnect their transmission and routing of Local Traffic via a Local Channel at either the DS1 or DS3 level. The Parties shall work jointly to determine the specific transmission system. However, Talk America's SONET transmission system must be compatible with BellSouth's equipment, and the Data Communications Channel (DCC) must be turned off.

3.4.2 Each Party, at its own expense, shall procure, install and maintain the agreed upon SONET transmission system in its network.

3.4.3 The Parties shall agree to a Fiber Meet point between the BellSouth Serving Wire Center and the Talk America Serving Wire Center. The Parties shall deliver their fiber optic facilities to the Fiber Meet point with sufficient spare length to reach the fusion splice point for the Fiber Meet Point. BellSouth shall, at its own expense, provide and maintain the fusion splice point for the Fiber Meet. A building type Common Language Location Identification ("CLLI") code will be established for each Fiber Meet point. All orders for interconnection facilities from the Fiber Meet point shall indicate the Fiber Meet point as the originating point for the facility.

3.4.4 Upon verbal request by Talk America, BellSouth shall allow Talk America access to the fusion splice point for the Fiber Meet point for maintenance purposes on Talk America's side of the Fiber Meet point.

3.4.5 Neither Party shall charge the other for it's the Local Channel portion of the Fiber Meet facility used exclusively for Local Traffic. All the appropriate charges will apply. Charges for switched and special access services shall be billed in accordance with the applicable access service tariff.

4. INTERCONNECTION TRUNK GROUP ARCHITECTURES

4.1 BellSouth and Talk America shall establish interconnecting trunk groups and trunk group configurations between networks, including the use of one-way or two-way trunks in accordance with the following provisions set forth in this Agreement**.** For trunking purposes, traffic will be routed based on the digits dialed by the originating end user and in accordance with the LERG.

4.2 Talk America shall establish an interconnection trunk group(s) to at least one BellSouth access tandem within the LATA for the delivery of Talk America's originated Local Traffic and for the receipt and delivery of Transit Traffic. To the extent Talk America desires to deliver Local Traffic and/or Transit Traffic BellSouth access tandems within the LATA, other than the tandems(s) to which Talk America has established interconnection trunk groups , Talk America shall order Multiple Tandem Access, as described in this Attachment, to such other BellSouth access tandems.

4.2.1 Notwithstanding the forgoing, Talk America shall establish an interconnection trunk group(s) to all BellSouth access and local tandems in the LATA where Talk America has homed (i.e. assigned) its NPA/NXXs. Talk America shall home its NPA/NXXs on the BellSouth tandems that serve the exchange rate center areas to which the NPA/NXXs are assigned. The specified exchange rate center assigned to each BellSouth tandem is defined in the LERG. Talk America shall enter its NPA/NXX access and/or local tandem homing arrangements into the LERG.

4.3 Switched access traffic will be delivered to and from Interexchange Carriers (IXCs) based on Talk America's NXX access tandem homing arrangement as specified by Talk America in the LERG.

4.4 Any Talk America interconnection request that (1) deviates from the interconnection trunk group architectures as described in this Agreement, (2) affects traffic delivered to Talk America from a BellSouth switch, and (3) requires special BellSouth switch translations and other network modifications will require Talk America to submit a Bona Fide Request/New Business Request (BFR/NBR) via the BFR/NBR Process as set forth in this Agreement.

4.5 Recurring and non-recurring rates associated with interconnecting trunk groups between BellSouth and Talk America are set forth in Exhibit A. To the extent a rate associated with the interconnecting trunk group is not set forth in Exhibit A, the rate shall be as set forth in the appropriate BellSouth tariff for switched access services.

4.6 For two-way trunk groups that carry only both Parties' Local Traffic, the Parties shall be compensated at 50% of the nonrecurring and recurring rates for dedicated trunks and facilities . Talk America shall be responsible for ordering and paying for any two-way trunks carrying Transit Traffic.

4.7 All trunk groups will be provisioned as Signaling System 7 (SS7) capable where technically feasible. If SS7 is not technically feasible multi-frequency (MF) protocol signaling shall be used.

4.8 In cases where Talk America is also an IXC, the IXC's Feature Group D (FG D) trunk group(s) must remain separate from the local interconnection trunk group(s).

4.9 Each Party shall order interconnection trunks and trunk group, including trunk and trunk group augmentations via the ASR process. A Firm Order Confirmation (FOC) shall be returned to the ordering Party, after receipt of a valid, error free ASR, within the timeframes set forth in Attachment 9 to this Agreement. Notwithstanding the foregoing, blocking situations and projects shall be managed through BellSouth's Local Interconnection Switching Center (LISC) Project Management Group and Talk America's equivalent trunking group, and FOCs for such orders shall be returned in the timeframes applicable to the project. A project is defined as (1) a new trunk group or (2) a request for more than 96 trunks on a single or multiple group(s) in a given BellSouth local calling area.

4.10 **Interconnection Trunk Groups for Exchange of Local Traffic and Transit Traffic**

4.10.1 Upon mutual agreement of the Parties in a joint planning meeting, the Parties' shall exchange Local Traffic on two-way interconnection trunk group(s) with the quantity of trunks being mutually determined and the provisioning being jointly coordinated. Furthermore, the Parties shall agree upon the IP(s) for two-way interconnection trunk groups transporting both Parties Local Traffic. Talk America shall order such two-way trunks via the Access Service Request (ASR) process. . BellSouth will use the Trunk Group Service Request (TGSR) to request changes in trunking. Furthermore, the Parties shall jointly review trunk performance and forecasts on a periodic basis. The Parties use of two-way interconnection trunk groups for the transport of Local Traffic between the Parties does not preclude either Party from establishing additional one-way interconnection trunks for the delivery of its originated Local Traffic to the other Party.

4.10.2 **BellSouth Access Tandem Interconnection**

4.10.2.1 BellSouth access tandem interconnection at a single access tandem provides access to those end offices subtending that access tandem ("Intratandem Access"). Access tandem interconnection is available for any of the following access tandem architectures

4.10.2.2 **Basic Architecture**

4.10.2.2.1 In the basic architecture, Talk America's originating Local Traffic and originating and terminating Transit Traffic is transported on a single two-way trunk group between Talk America and BellSouth access tandem(s) within a LATA to provide Intratandem Access. This trunk group carries Transit Traffic between Talk America and Independent Companies, Interexchange Carriers, other CLECs, CMRS providers that have a Meet Point Billing arrangement with BellSouth, and other network providers with which Talk America desires to exchange traffic. This trunk group also carries Talk America originated Transit Traffic transiting a single BellSouth access tandem destined to third party tandems such as an Independent Company tandem or other CLEC tandem. BellSouth originated Local Traffic is transported on a separate single one-way trunk group terminating to Talk America. Other trunk groups for operator services, directory assistance, emergency services and intercept must be established if service is requested. The LERG contains current routing and tandem serving arrangements. The basic Architecture is illustrated in Exhibit B.

4.10.2.3 **One-Way Trunk Group Architecture**

4.10.2.3.1 In one-way trunk group architecture, the Parties interconnect using three separate trunk groups. A one-way trunk group provides Intratandem Access for Talk America-originated Local Traffic destined for BellSouth end-users. A second one-way trunk group carries BellSouth-originated Local Traffic destined for Talk America end-users. A two-way trunk group provides Intratandem Access for Talk America's originating and terminating Transit Traffic. This trunk group carries Transit Traffic between Talk America and Independent Companies, Interexchange Carriers, other CLECs, CMRS providers that have a Meet Point Billing arrangement with BellSouth, and other network providers with which Talk America desires to exchange traffic. This trunk group also carries Talk America originated Transit Traffic transiting a single BellSouth access tandem destined to third party tandems such as an Independent Company tandem or other CLEC tandem. BellSouth originated Local Traffic is transported on a separate single one-way trunk group terminating to Talk America. Other trunk groups for operator services, directory assistance, emergency services and intercept must be established if service is requested. The LERG contains current routing and tandem serving arrangements. The one-way trunk group architecture is illustrated in Exhibit C.

4.10.2.4 **Two-Way Trunk Group Architecture**

4.10.2.4.1 Upon agreement of the Parties as set forth in Section 4.10.1 above, the two-way trunk group Architecture establishes one two-way trunk group to provide Intratandem Access for the exchange of Local Traffic between Talk America and BellSouth. In addition, a separate two-way transit trunk group must be established for Talk America's originating and terminating Transit Traffic. This trunk group

carries Transit Traffic between Talk America and Independent Companies, Interexchange Carriers, other CLECs, CMRS providers that have a Meet Point Billing arrangement with BellSouth, and other network providers with which Talk America desires to exchange traffic. This trunk group also carries Talk America originated Transit Traffic transiting a single BellSouth access tandem destined to third party tandems such as an Independent Company tandem or other CLEC tandem. BellSouth originated Local Traffic is transported on a separate single one-way trunk group terminating to Talk America. Other trunk groups for operator services, directory assistance, emergency services and intercept must be established if service is requested. The LERG contains current routing and tandem serving arrangements. The two-way trunk group architecture is illustrated in Exhibit D.

4.10.2.5 **Supergroup Architecture**

4.10.2.5.1 Upon agreement of the Parties as set forth in Section 4.10.1 above, the Parties may establish a supergroup architecture. In the supergroup architecture, the Parties' Local Traffic and Talk America's Transit Traffic are exchanged on a single two-way trunk group between Talk America and BellSouth to provide Intratandem Access to Talk America. This trunk group carries Transit Traffic between Talk America and Independent Companies, Interexchange Carriers, other CLECs, CMRS providers that have a Meet Point Billing arrangement with BellSouth, and other network providers with which Talk America desires to exchange traffic. This trunk group also carries Talk America originated Transit Traffic transiting a single BellSouth access tandem destined to third party tandems such as an Independent Company tandem or other CLEC tandem. BellSouth originated Local Traffic is transported on a separate single one-way trunk group terminating to Talk America. Other trunk groups for operator services, directory assistance, emergency services and intercept must be established if service is requested. The LERG contains current routing and tandem serving arrangements. The supergroup architecture is illustrated in Exhibit D..

4.10.3 **Multiple Tandem Access Interconnection**

4.10.3.1 Where Talk America does not choose access tandem interconnection at every BellSouth access tandem within a LATA, Talk America may utilize BellSouth multiple tandem access interconnection (MTA). To utilize MTA Talk America must establish an interconnection trunk group(s) at a BellSouth access tandem through multiple BellSouth access tandems within the LATA as required. BellSouth will route Talk America's originated Local Traffic for LATA wide transport and termination. Talk America must also establish an interconnection trunk group(s) at all BellSouth access tandems where Talk America NXXs are homed as described in Section 4.2.1 above. If Talk America does not have NXXs homed at any particular BellSouth access tandem within a LATA and elects not to establish an interconnection trunk group(s) at such BellSouth access tandem, Talk

America can order MTA in each BellSouth access tandem within the LATA where it does have an interconnection trunk group(s) and BellSouth will terminate Talk America's Local Traffic to end-users served through those BellSouth access tandems where Talk America does not have an interconnection trunk group(s). MTA shall be provisioned in accordance with BellSouth's Ordering Guidelines.

4.10.3.2 Talk America may also utilize MTA to route its originated Transit Traffic; provided, however, that MTA may not be utilized to route switched access traffic that transits the BellSouth network to an Interexchange Carrier (IXC). Switched access traffic originated by or terminated to Talk America will be delivered to and from IXCs based on Talk America's NXX access tandem homing arrangement as specified by Talk America in the LERG.

4.10.3.3 Compensation for MTA shall be at the applicable tandem switching and transport charges specified in Exhibit A to this Attachment and shall be billed in addition to any Call Transport and Termination charges.

4.10.3.4 To the extent Talk America does not purchase MTA in a LATA served by multiple access tandems, Talk America must establish an interconnection trunk group(s) to every access tandem in the LATA to serve the entire LATA. To the extent Talk America routes its traffic in such a way that utilizes BellSouth's MTA service without properly ordering MTA service, Talk America agrees to pay BellSouth the associated transport and termination charges.

4.10.4 **Local Tandem Interconnection**

4.10.4.1 Local Tandem Interconnection arrangement allows Talk America to establish an interconnection trunk group(s) at BellSouth local tandems for: (1) the delivery of Talk America-originated Local Traffic transported and terminated by BellSouth to BellSouth end offices within the local calling area as defined in BellSouth's General Subscriber Services Tariff (GSST), Section A3 served by those BellSouth local tandems, and (2) for local Transit Traffic transported by BellSouth for third party network providers who have also established an interconnection trunk group(s) at those BellSouth local tandems.

4.10.4.2 When a specified local calling area is served by more than one BellSouth local tandem, Talk America must designate a "home" local tandem for each of its assigned NPA/NXXs and establish trunk connections to such local tandems. Additionally, Talk America may choose to establish an interconnection trunk group(s) at the BellSouth local tandems where it has no codes homing but is not required to do so. Talk America may deliver Local Traffic to a "home" BellSouth local tandem that is destined for other BellSouth or third party network provider end offices subtending other BellSouth local tandems in the same local calling area where Talk America does not choose to establish an interconnection trunk group(s). It is Talk America's responsibility to enter its own NPA/NXX local tandem homing arrangements into the LERG either directly or via a vendor in

order for other third party network providers to determine appropriate traffic routing to Talk America's codes. Likewise, Talk America shall obtain its routing information from the LERG.

4.10.4.3 Notwithstanding establishing an interconnection trunk group(s) to BellSouth's local tandems, Talk America must also establish an interconnection trunk group(s) to BellSouth access tandems within the LATA on which Talk America has NPA/NXXs homed for the delivery of Interexchange Carrier Switched Access (SWA) and toll traffic, and traffic to Type 2A CMRS connections located at the access tandems. BellSouth shall not switch SWA traffic through more than one BellSouth access tandem. SWA, Type 2A CMRS or toll traffic routed to the local tandem in error will not be backhauled to the BellSouth access tandem for completion. (Type 2A CMRS interconnection is defined in BellSouth's A35 General Subscriber Services Tariff).

4.10.4.4 BellSouth's provisioning of local tandem interconnection assumes that Talk America has executed the necessary Local Interconnection Agreements with the other third party network providers subtending those local tandems as required by the Act.

4.10.5 **Direct End Office-to-End Office Interconnection**

4.10.5.1 Direct End Office-to-End Office one-way or two-way interconnection trunk groups allow for the delivery of a Party's originating local or intraLATA toll traffic to the terminating Party on a direct end office-to-end office basis.

4.10.5.2 The Parties shall utilize direct end office-to-end office trunk groups under the following conditions:

4.10.5.2.1 (1) Tandem Exhaust - If a tandem through which the Parties are interconnected is unable to, or is forecasted to be unable to support additional traffic loads for any period of time, the Parties will mutually agree on an end office trunking plan that will alleviate the tandem capacity shortage and ensure completion of traffic between Talk America and BellSouth's subscribers.

4.10.5.2.2 (2) Traffic Volume –To the extent either Party has the capability to measure the amount of traffic between a Talk America switching center and a BellSouth end office, either Party shall install and retain direct end office trunking sufficient to handle actual or reasonably forecasted traffic volumes, whichever is greater, between a Talk America switching center and a BellSouth end office where the traffic exceeds or is forecasted to exceed a single DS1 of traffic per month. Either Party will install additional capacity between such points when overflow traffic between Talk America's switching center and BellSouth's end office exceeds or is forecasted to exceed a single DS1 of traffic per month. In the case of one way trunking, additional trunking shall only be required by the Party whose trunking has achieved the preceding usage threshold.

4.10.5.2.3 (3) Mutual Agreement - The Parties may install direct end office trunking upon mutual agreement in the absence of conditions (1) or (2) above, and agreement will not unreasonably be withheld.

4.10.6 **Transit Traffic Trunk Group**

4.10.6.1 Transit Traffic trunks can either be two-way trunks or two one-way trunks ordered by Talk America to deliver and receive local and intraLATA toll Transit Traffic from third parties, such as Independent Companies and other CLECs, via BellSouth access tandems (or BellSouth local tandems for Local Traffic), and Switched Access traffic to and from Interexchange Carriers via BellSouth access tandems pursuant to the Transit Traffic section of this Attachment. Establishing Transit Traffic trunks at BellSouth access and local tandems provides intratandem access to the third parties also interconnected at those tandems.

4.10.6.2 **Toll Free Traffic**

4.10.6.2.1 If Talk America chooses BellSouth to handle Toll Free database queries from its switches, all Talk America originating Toll Free traffic will be routed over the Transit Traffic Trunk Group.

4.10.6.2.2 All originating Toll Free Service (Toll Free) calls for which Talk America requests that BellSouth perform the Service Switching Point ("SSP") function (i.e., perform the database query) shall be delivered using GR-394 format over the Transit Traffic Trunk Group. Carrier Code "0110" and Circuit Code (to be determined for each LATA) shall be used for all such calls.

4.10.6.2.3 Talk America may handle its own Toll Free database queries from its switch. If so, Talk America will determine the nature (local/intraLATA/interLATA) of the Toll Free call based on the response from the database. If the query determines that the call is a BellSouth local or intraLATA Toll Free number, Talk America will route the post-query local or IntraLATA converted ten-digit local number to BellSouth over the local or intraLATA trunk group. If the query determines that the call is a third party (ICO or other CLEC) local or intraLATA Toll Free number, Talk America will route the post-query local or intraLATA converted ten-digit local number to BellSouth over the Transit Traffic Trunk Group. In such case, Talk America is to provide a Toll Free billing record when appropriate. If the query reveals the call is an interLATA Toll Free number, Talk America will route the post-query interLATA call (Toll Free number) directly from its switch for carriers interconnected with its network or over the Transit Traffic Trunk Group to carriers not directly connected to its network but are connected to BellSouth's access tandem. Calls will be routed to BellSouth over the local/intraLATA and Transit Traffic Trunk Groups within the LATA in which the calls originate.

4.10.6.2.4 All post-query Toll Free Service (Toll Free) calls for which Talk America performs the SSP function, if delivered to BellSouth, shall be delivered using GR-394 format

for calls destined to IXCs, and GR-317 format for calls destined to end offices that directly subtend the BellSouth access tandem.

5. NETWORK DESIGN AND MANAGEMENT FOR INTERCONNECTION

5.1 Network Management and Changes. Both Parties will work cooperatively with each other to install and maintain the most effective and reliable interconnected telecommunications networks, including but not limited to, the exchange of toll-free maintenance contact numbers and escalation procedures. Both Parties agree to provide public notice of changes in the information necessary for the transmission and routing of services using its local exchange facilities or networks, as well as of any other changes that would affect the interoperability of those facilities and networks.

5.2 Interconnection Technical Standards. The interconnection of all networks will be based upon accepted industry/national guidelines for transmission standards and traffic blocking criteria. Interconnecting facilities shall conform, at a minimum, to the telecommunications industry standard of DS-1 pursuant to Bellcore Standard No. TR-NWT-00499. Signal transfer point, Signaling System 7 ("SS7") connectivity is required at each interconnection point. BellSouth will provide out-of-band signaling using Common Channel Signaling Access Capability where technically and economically feasible, in accordance with the technical specifications set forth in the BellSouth Guidelines to Technical Publication, TR-TSV-000905. Facilities of each Party shall provide the necessary on-hook, off-hook answer and disconnect supervision and shall hand off calling number ID (Calling Party Number) when technically feasible.

5.3 Quality of Interconnection. The local interconnection for the transmission and routing of telephone exchange service and exchange access that each Party provides to each other will be at least equal in quality to what it provides to itself and any subsidiary or affiliate, where technically feasible, or to any other Party to which each Party provides local interconnection.

5.4 Network Management Controls. Both Parties will work cooperatively with each other to apply sound network management principles by invoking appropriate network management controls (e.g., call gapping) to alleviate or prevent network congestion.

5.5 Common Channel Signaling. Both Parties will provide LEC-to-LEC Common Channel Signaling ("CCS") to each other, where available, in conjunction with all traffic in order to enable full interoperability of CLASS features and functions except for call return. All CCS signaling parameters will be provided, including automatic number identification ("ANI"), originating line information ("OLI") calling company category, charge number, etc. All privacy indicators will be honored, and each Party will cooperate with each other on the exchange of Transactional Capabilities Application Part ("TCAP") messages to facilitate full

interoperability of CCS-based features between the respective networks. Neither Party shall alter the CCS parameters, or be a party to altering such parameters, or knowingly pass CCS parameters that have been altered in order to circumvent appropriate interconnection charges.

5.6 Signaling Call Information. BellSouth and Talk America will send and receive 10 digits for Local Traffic. Additionally, BellSouth and Talk America will exchange the proper call information, i.e. originated call company number and destination call company number, CIC, and OZZ, including all proper translations for routing between networks and any information necessary for billing.

5.7 **Forecasting for Trunk Provisioning**

5.7.1 Within six (6) months after execution of this agreement, Talk America shall provide an initial interconnection trunk group forecast for each LATA that it shall provide service within BellSouth's region. Upon receipt of Talk America's forecast, the Parties shall schedule and participate in a joint planning meeting to develop a joint interconnection trunk group forecast. Each forecast provided under this Section shall be deemed "Confidential Information" under the General Terms and Conditions of this Agreement.

5.7.1.1 At a minimum, the forecast shall include the projected quantity of Transit Trunks, Talk America-to-BellSouth one-way trunks ("Talk America Trunks"), BellSouth-to-Talk America one-way trunks ("Reciprocal Trunks") and/or two-way interconnection trunks, if the Parties have agreed to interconnect using two-way trunking to transport the Parties' local and intraLATA toll. The quantities shall be projected for a minimum of six months in advance and shall include the current year plus next two years total forecasted quantities. Considering Talk America's provided forecast, the Parties shall mutually develop Reciprocal Trunk and/or two-way interconnection trunk forecast quantities for the time periods listed and to be included within the initial forecast.

5.7.1.2 Additionally all forecasts shall include, at a minimum, Access Carrier Terminal Location ("ACTL"), trunk group type (local/intraLATA toll, Transit, Operator Services, 911, etc.), A location/Z location (CLLI codes for Talk America location and BellSouth location where the trunks shall terminate), interface type (e.g., DS1), Direction of Signaling, Trunk Group Number, if known, (commonly referred to as the 2-6 code) and forecasted trunks in service each year (cumulative).

5.7.2 Each Party shall exercise its best efforts to provide the quantity of interconnection trunks mutually forecasted. However, the provision of the forecasted quantity of interconnection trunks is subject to trunk terminations and facility capacity existing at the time the trunk order is submitted. Furthermore, the receipt and development of trunk forecasts does not imply any liability for failure to perform if capacity (trunk terminations or facilities) is not available for use at the forecasted time.

5.7.3 The submitting and development of interconnection trunk forecasts shall not replace the ordering process in place for local interconnection trunks.

5.7.4 Once initial interconnection trunk forecasts have been developed, Talk America shall continue to provide interconnection trunk forecasts on a semiannual basis or at otherwise mutually agreeable intervals. Talk America shall use its best efforts to make the forecasts as accurate as possible based on reasonable engineering criteria. Interconnection trunk forecasts shall be updated and provided to BellSouth on an as needed basis, but no less frequently than semiannually and no more frequently than monthly. Upon receipt of Talk America's forecast, including forecast updates, the Parties shall confer to mutually develop BellSouth Reciprocal Trunk and/or two-way interconnection trunk forecasted quantities for the listed time periods within such subsequent forecasts.

5.8 **Trunk Utilization**

5.8.1 BellSouth and Talk America shall monitor traffic on each interconnection trunk group that is installed pursuant to the initial interconnection trunk requirements and subsequent forecasts. At any time after the end of a calendar quarter, based on a review of the capacity utilization during such quarter for installed reciprocal trunk groups and/or two-way interconnection trunk groups, subject to the provisions of the section following, BellSouth may disconnect any non-utilized or under-utilized reciprocal trunk(s) and Talk America shall refund to BellSouth any associated trunk and facility charges paid by BellSouth. BellSouth may request Talk America to disconnect any under-utilized two-way interconnection trunk(s), if BellSouth has determined that the trunk group is not being utilized at eighty-five percent (85%) of the time consistent busy hour utilization level, provided that the Parties have not otherwise agreed. Talk America shall comply with all such requests, subject to Section 5.8.1.1 below. Under-utilized trunks are defined as the trunks being utilized at less than 85% as a result of a time consistent busy hour utilization.

5.8.1.1 BellSouth's LISC will notify the Talk America of any under-utilized reciprocal trunk groups and the number of trunks that BellSouth wishes to disconnect. BellSouth will provide supporting information either by email or facsimile to the designated Talk America interface. Talk America will provide concurrence with the disconnection in seven (7) business days or will provide specific information supporting why the trunks should not be disconnected. Such supporting information should include expected Local Number Ported (LNP) and traffic volumes and the timeframes within which Talk America expects to need such trunks. BellSouth's LISC Project Manager and Circuit Capacity Manager will discuss the information with Talk America to determine if agreement can be reached on the number of trunks to be removed. If no agreement can be reached, BellSouth will issue disconnect orders to Talk America. The due date of these

orders will be four weeks after Talk America was first notified in writing of the underutilization of the trunk groups.

5.8.1.2 Talk America monitors all direct trunks from Talk America to BellSouth. If Talk America wishes to disconnect any such trunks, Talk America shall issue an ASR to do so.

5.8.2 To the extent that any interconnection trunk group is utilized at a time-consistent busy hour of eighty-five percent (85%) or greater, the Parties shall negotiate in good faith for the installation of augmented facilities.

6. LOCAL DIALING PARITY

6.1 BellSouth and Talk America shall provide local and toll dialing parity to each other with no unreasonable dialing delays. Dialing parity shall be provided for all originating telecommunications services that require dialing to route a call. BellSouth and Talk America shall permit similarly situated telephone exchange service end users to dial the same number of digits to make a local telephone call notwithstanding the identity of the end user's or the called party's telecommunications service provider.

7. INTERCONNECTION COMPENSATION

7.1 Compensation for Call Transportation and Termination for Local Traffic and ISP-bound Traffic

7.1.1 For reciprocal compensation between the Parties pursuant to this Attachment, Local Traffic is defined as any circuit switched call that is originated by an end user of one Party and terminated to an end user of the other Party within a given LATA on that other Party's network, except for those calls that are originated or terminated through switched access arrangements as established by the ruling regulatory body.

7.1.1.1 Additionally, Local Traffic includes any cross boundary, voice-to-voice intrastate, interLATA or interstate, interLATA calls established as a local call by the ruling regulatory body.

7.1.2 ISP-bound Traffic is defined as calls to an information service provider or Internet service provider ("ISP") that are dialed by using a local dialing pattern (7 or 10 digits) by a calling party in one exchange or local calling area to an ISP server or modem in the same exchange or local calling area. ISP-bound Traffic will be governed by any decisions from the FCC or other authorized governmental body. ISP-bound Traffic is not considered Local Traffic subject to reciprocal compensation, but instead is classified as information access.

7.1.3 Neither Party shall pay compensation to the other Party for per minute of use rate elements associated with the call transportation and termination of Local Trafficor ISP-bound Traffic.

7.1.4 The appropriate elemental rates set forth in Exhibit A of this Attachment shall apply for Transit Traffic as described in Sections 7.9 and 7.9.1 below and to Multiple Tandem Access as described in Section 4.10.3 above.

7.1.5 Neither Party shall represent Switched Access Traffic as Local Traffic or ISP-bound Traffic for purposes of payment of call transportation and termination compensation.

7.1.6 If Talk America assigns NPA/NXXs to specific BellSouth rate centers within the LATA and assigns numbers from those NPA/NXXs to Talk America end users physically located outside of that LATA, BellSouth traffic originating from within the LATA where the NPA/NXXs are assigned and delivered to a Talk America customer physically located outside of such LATA, shall not be deemed Local Traffic, and no compensation from BellSouth to Talk America shall be due therefor. Further, Talk America agrees to identify such interLATA traffic to BellSouth and to compensate BellSouth for originating and transporting such interLATA traffic to Talk America at BellSouth's switched access tariff rates.

7.2 If Talk America does not identify such interLATA traffic to BellSouth, to the best of BellSouth's ability BellSouth will determine which whole Talk America NPA/NXXs on which to charge the applicable rates for originating network access service as reflected in BellSouth's Access Service Tariff. BellSouth shall make appropriate billing adjustments if Talk America can provide sufficient information for BellSouth to determine whether or not said traffic is Local Traffic.

7.3 **Percent Local Use**. Each Party shall report to the other a Percent Local Usage ("PLU"). The application of the PLU will determine the amount of local minutes to be billed to the other Party. For purposes of developing the PLU, each Party shall consider every local call and every long distance call, excluding Transit Traffic. Each Party shall update its PLU on the first of January, April, July and October of the year and shall send it to the other Party to be received no later than 30 calendar days after the first of each such month based on local usage for the past three months ending the last day of December, March, June and September, respectively. Requirements associated with PLU calculation and reporting shall be as set forth in BellSouth's Jurisdictional Factors Reporting Guide, as it is amended from time to time. Notwithstanding the foregoing, where the terminating Party has message recording technology that identifies the jurisdiction of traffic terminated as defined in this Agreement, such information, in lieu of the PLU factor, shall at the terminating Party's option be utilized to determine the appropriate local usage compensation to be paid.

7.4 **Percent Local Facility.** Each Party shall report to the other a Percent Local Facility ("PLF"). The application of the PLF will determine the portion of switched dedicated transport to be billed per the local jurisdiction rates. The PLF shall be applied to Multiplexing, Local Channel and Interoffice Channel Switched Dedicated Transport utilized in the provision of local interconnection trunks. Each Party shall update its PLF on the first of January, April, July and October of the year and shall send it to the other Party to be received no later than 30 calendar days after the first of each such month to be effective the first bill period the following month, respectively. Requirements associated with PLU and PLF calculation and reporting shall be as set forth in BellSouth's Jurisdictional Factors Reporting Guide, as it is amended from time to time.

7.5 **Percent Interstate Usage**. Each Party shall report to the other the projected Percent Interstate Usage ("PIU"). All jurisdictional report requirements, rules and regulations for Interexchange Carriers specified in BellSouth's Intrastate Access Services Tariff will apply to Talk America. After interstate and intrastate traffic percentages have been determined by use of PIU procedures, the PLU and PLF factors will be used for application and billing of local interconnection. Each Party shall update its PIUs on the first of January, April, July and October of the year and shall send it to the other Party to be received no later than 30 calendar days after the first of each such month, for all services showing the percentages of use (PIUs, PLU, and PLF) for the past three months ending the last day of December, March, June and September. Notwithstanding the foregoing, where the terminating Party has message recording technology that identifies the jurisdiction of traffic terminated as defined in this Agreement, such information, in lieu of the PIU and PLU factors, shall at the terminating Party's option be utilized to determine the appropriate local usage compensation to be paid.

7.6 **Audits.** On thirty (30) days written notice, each Party must provide the other the ability and opportunity to conduct an annual audit to ensure the proper billing of traffic. BellSouth and Talk America shall retain records of call detail for a minimum of nine months from which a PLU, PLF and/or PIU can be ascertained. The audit shall be accomplished during normal business hours at an office designated by the Party being audited. Audit requests shall not be submitted more frequently than one (1) time per calendar year. Audits shall be performed by a mutually acceptable independent auditory paid for by the Party requesting the audit. The PLU and/or PIU shall be adjusted based upon the audit results and shall apply to the usage for the quarter the audit was completed, to the usage for the quarter prior to the completion of the audit, and to the usage for the two quarters following the completion of the audit. If, as a result of an audit, either Party is found to have overstated the PLU and/or PIU by twenty percentage points (20%) or more, that Party shall reimburse the auditing Party for the cost of the audit.

7.7 **Compensation for 8XX Traffic**

7.7.1 Compensation for 8XX Traffic. Each Party shall compensate the other pursuant to the appropriate switched access charges, including the database query charge as set forth in intrastate or interstate switched access tariff of the Party whose 8XX database is being queried.

7.7.2 Records for 8XX Billing. Each Party will provide to the other the appropriate records necessary for billing intraLATA 8XX customers. The records provided will be in a standard EMI format.

7.7.3 8XX Access Screening. BellSouth's provision of 8XX TFD to Talk America requires interconnection from Talk America to BellSouth 8XX SCP. Such interconnections shall be established pursuant to BellSouth's Common Channel Signaling Interconnection Guidelines and Bellcore's CCS Network Interface Specification document, TR-TSV-000905. Talk America shall establish CCS7 interconnection at the BellSouth Local Signal Transfer Points serving the BellSouth 8XX SCPs that Talk America desires to query. The terms and conditions for 8XX TFD are set out in BellSouth's Intrastate Access Services Tariff as amended.

7.8 **Mutual Provision of Switched Access Service**

7.8.1 Switched Access Traffic. Switched Access Traffic is described in the BellSouth Access Tariff. Additionally, any Public Switched Telephone Network interexchange telecommunications traffic, regardless of transport protocol method, where the originating and terminating points, end-to-end points, are in different LATAs, or are in the same LATA and the Parties' Switched Access services are used for the origination or termination of the call, shall be considered Switched Access Traffic. Irrespective of transport protocol method used, a call which originates in one LATA and terminates in another LATA (i.e., the end-to-end points of the call) or in which the Parties' Switched Access Services are used for the origination or termination of the call, shall not be compensated as local.

7.8.2 If the BellSouth end user chooses Talk America as their presubscribed interexchange carrier, or if the BellSouth end user uses Talk America as an interexchange carrier on a 101XXXX basis, BellSouth will charge Talk America the appropriate BellSouth tariff charges for originating switched access services. If the Talk America end user chooses BellSouth as their presubscribed interexchange carrier, or if the Talk America end user uses BellSouth as an interexchange carrier on a 101XXXX basis, Talk America will charge BellSouth the appropriate Talk America tariff charges for originating switched access services.

7.8.3 For originating or terminating switched access traffic on the other company's network, the originating Party will pay the terminating Party BellSouth's current intrastate or interstate, whichever is appropriate, switched access tariff rates as set forth in BellSouth's Intrastate or Interstate Access Services Tariff..

7.8.4 When Talk America's end office switch provides an access service connection to or from an interexchange carrier ("IXC") by a direct trunk group to the IXC utilizing BellSouth facilities, each Party will provide its own access services to the IXC and bill on a multi-bill, multi-tariff meet-point basis. Each Party will bill its own access services rates to the IXC with the exception of the interconnection charge. The interconnection charge will be billed by <customer name> as the Party providing the end office function. Each party will use the Multiple Exchange Carrier Access Billing (MECAB) guidelines to establish meet point billing for all applicable traffic. The parties shall utilize a thirty (30) day billing period.

7.8.4.1 When <customer name>'s end office subtends the BellSouth Access Tandem switch for receipt or delivery of switched access traffic and provides an access service connection to or from an IXC via BellSouth's Access Tandem switch, BellSouth, as the tandem company agrees to provide to <customer name>, as the End Office Company, as defined in MECAB, at no charge, all the switched access detail usage data, recorded at the access tandem, within no more than sixty (60) days after the recording date. Each Party will notify the other when it is not feasible to meet these requirements. As business requirements change, data reporting requirements may be modified as necessary.

7.8.5 BellSouth, as the tandem provider company, will retain for a minimum period of sixty (60) days, access message detail sufficient to recreate any data that is lost or damaged by the tandem provider company or any third party involved in processing or transporting data.

7.8.6 BellSouth, as the tandem provider company, agrees to recreate the lost or damaged data within forty-eight (48) hours of notification by the other or by an authorized third party handling the data.

7.8.7 Any claims against BellSouth, as the tandem provider company, for unbillable or uncollectible revenue should be filed with the tandem provider company within 120 days of the usage date.

7.8.8 BellSouth, as the tandem provider company shall keep records of its billing activities relating to jointly-provided Intrastate and Interstate access services in sufficient detail to permit the Subsequent Billing Party to, by formal or informal review or audit, to verify the accuracy and reasonableness of the jointly-provided access billing data provided by the Initial Billing Party. Each Party agrees to cooperate in such formal or informal reviews or audits and further agrees to jointly review the findings of such reviews or audits in order to resolve any differences concerning the findings thereof.

7.8.9 Talk America agrees not to deliver switched access traffic to BellSouth for termination except over Talk America ordered switched access trunks and facilities.

7.9 **Transit Traffic**

7.9.1 BellSouth shall provide tandem switching and transport services for Talk America's Transit Traffic. Rates for Local and ISP-bound Transit Traffic shall be the applicable Call Transport and Termination charges as set forth in Exhibit A to this Attachment. Rates for Switched Access Transit Traffic shall be the applicable charges as set forth in BellSouth Interstate or Intrastate Switched Access tariffs. Switched Access Transit Traffic presumes that Talk America's end office is subtending the BellSouth Access Tandem for switched access traffic to and from Talk America's end users utilizing BellSouth facilities, either by direct trunks with the IXC, or via the BellSouth Access Tandem. Billing associated with all Transit Traffic shall be pursuant to MECAB guidelines. Pursuant to these guidelines, the Initial Billing Company shall provide summary usage data, for all originating and terminating Transit Traffic, to all Subsequent Billing Companies. Traffic between Talk America and Wireless Type 1 third parties shall not be treated as Transit Traffic from a routing or billing perspective. Traffic between Talk America and Wireless Type 2A or UNE-CLEC third parties shall not be treated as Transit Traffic from a routing or billing perspective until BellSouth and the Wireless carrier or UNE-CLEC third party have the capability to properly meet-point-bill in accordance with MECAB guidelines.

7.9.2 In the event that either Party fails to provide the appropriate MECAB usage data to the other Party within 90 days after the recording date and the receiving Party is unable to bill and/or collect Transit Traffic revenues due to the sending Party's failure to provide such data within said time period, then the Party failing to send the data as specified herein shall be liable to the other Party in an amount equal to the unbillable or uncollectible revenues. Each company will provide complete documentation to the other to substantiate any claim of unbillable revenues and a negotiated settlement will be agreed upon between the Parties

7.9.3 The delivery of traffic which transits the BellSouth network and is transported to another carrier's network is excluded from any BellSouth billing guarantees and will be delivered at the rates stipulated in this Agreement to a terminating carrier. BellSouth agrees to deliver this traffic to the terminating carrier; provided, however, that Talk America is solely responsible for negotiating and executing any appropriate contractual agreements with the terminating carrier for the receipt of this traffic through the BellSouth network. BellSouth will not be liable for any compensation to the terminating carrier or to Talk America. Talk America agrees to compensate BellSouth for any charges or costs for the delivery of Transit Traffic to a connecting carrier on behalf of Talk America. Additionally, the Parties agree that any billing to a third party or other telecommunications carrier under this section shall be pursuant to MECAB procedures.

8. FRAME RELAY SERVICE INTERCONNECTION

8.1 In addition to the Local Interconnection services set forth above, BellSouth will offer a network to network Interconnection arrangement between BellSouth's and Talk America's frame relay switches as set forth below. The following provisions will apply only to Frame Relay Service and Exchange Access Frame Relay Service in those states in which Talk America is certified and providing Frame Relay Service as a Local Exchange Carrier and where traffic is being exchanged between Talk America and BellSouth Frame Relay Switches in the same LATA.

8.2 The Parties agree to establish two-way Frame Relay facilities between their respective Frame Relay Switches to the mutually agreed upon Frame Relay Service point(s) of interconnection ("IP(s)") within the LATA. All IPs shall be within the same Frame Relay Network Serving Areas as defined in Section A40 of BellSouth's General Subscriber Service Tariff except as set forth in this Attachment.

8.3 Upon the request of either Party, such interconnection will be established where BellSouth and Talk America have Frame Relay Switches in the same LATA. Where there are multiple Frame Relay switches in one central office, an interconnection with any one of the switches will be considered an interconnection with all of the switches at that central office for purposes of routing packet traffic.

8.4 The Parties agree to provision local and intraLATA Frame Relay Service and Exchange Access Frame Relay Service (both intrastate and interstate) over Frame Relay interconnection facilities between the respective Frame Relay switches and the IPs.

8.5 The Parties agree to assess each other reciprocal charges for the facilities that each provides to the other according to the Percent Local Circuit Use Factor (PLCU), determined as follows:

8.5.1 If the data packets originate and terminate in locations in the same LATA, and consistent with the local definitions of the Agreement, the traffic is considered local. Frame Relay framed packet data is transported within Virtual Circuits (VC). For the purposes of this Agreement, if all the data packets transported within a VC remain within the LATA, then consistent with the local definitions in this Agreement, the traffic on that VC is local ("Local VC").

8.5.2 If the originating and terminating locations of the two-way packet data traffic are not in the same LATA, the traffic on that VC is interLATA ("InterLATA VC").

8.5.3 The PLCU is determined by dividing the total number of Local VCs, by the total number of VCs on each Frame Relay facility. To facilitate implementation, Talk America may determine its PLCU in aggregate, by dividing the total number of Local VCs in a given LATA by the total number VCs in that LATA. The Parties agree to renegotiate the method for determining PLCU, at BellSouth's request,

and within 90 days, if BellSouth notifies Talk America that it has found that this method does not adequately represent the PLCU.

8.5.4 If there are no VCs on a facility when it is billed, the PLCU will be zero.

8.5.5 BellSouth will provide the circuit between the Parties' respective Frame Relay Switches. The Parties will be compensated as follows: BellSouth will invoice, and Talk America will pay, the total non-recurring and recurring charges for the circuit based upon the rates set forth in BellSouth's Interstate Access Tariff, FCC No. 1. Talk America will then invoice, and BellSouth will pay, an amount calculated by multiplying the BellSouth billed charges for the circuit by one-half of Talk America's PLCU.

8.6 The Parties agree to compensate each other for Frame Relay network-to-network interface (NNI) ports based upon the NNI rates set forth in BellSouth's Interstate Access Tariff, FCC No. 1 Compensation for each pair of NNI ports will be calculated as follows: BellSouth will invoice, and Talk America will pay, the total non-recurring and recurring charges for the NNI port. Talk America will then invoice, and BellSouth will pay, an amount calculated by multiplying the BellSouth billed non-recurring and recurring charges for the NNI port by Talk America's PLCU.

8.7 Each Party agrees that there will be no charges to the other Party for its own subscriber's Permanent Virtual Circuit (PVC) rate elements for the local PVC segment from its Frame Relay switch to its own subscriber's premises. PVC rate elements include the Data Link Connection Identifier (DLCI) and Committed Information Rate (CIR).

8.8 For the PVC segment between the Talk America and BellSouth Frame Relay switches, compensation for the PVC charges is based upon the rates in BellSouth's Interstate Access Tariff, FCC No. 1.

8.9 Compensation for PVC rate elements will be calculated as follows:

8.9.1 If Talk America orders a VC connection between a BellSouth subscriber's PVC segment and a PVC segment from the BellSouth Frame Relay switch to the Talk America Frame Relay switch, BellSouth will invoice, and Talk America will pay, the total non-recurring and recurring PVC charges for the PVC segment between the BellSouth and Talk America Frame Relay switches. If the VC is a Local VC, Talk America will then invoice and BellSouth will pay, the total nonrecurring and recurring PVC charges billed for that segment. If the VC is not local, no compensation will be paid to Talk America for the PVC segment.

8.9.2 If BellSouth orders a Local VC connection between a Talk America subscriber's PVC segment and a PVC segment from the Talk America Frame Relay switch to the BellSouth Frame Relay switch, BellSouth will invoice, and Talk America will

pay, the total non-recurring and recurring PVC and CIR charges for the PVC segment between the BellSouth and Talk America Frame Relay switches. If the VC is a Local VC, Talk America will then invoice and BellSouth will pay the total non-recurring and recurring PVC and CIR charges billed for that segment. If the VC is not local, no compensation will be paid to Talk America for the PVC segment.

8.9.3 The Parties agree to compensate each other for requests to change a PVC segment or PVC service order record, according to the Feature Change charge as set forth in the BellSouth access tariff BellSouth Tariff FCC No. 1.

8.9.4 If Talk America requests a change, BellSouth will invoice and Talk America will pay a Feature Change charge for each affected PVC segment.

8.9.4.1 If BellSouth requests a change to a Local VC, Talk America will invoice and BellSouth will pay a Feature Change charge for each affected PVC segment.

8.9.5 The Parties agree to limit the sum of the CIR for the VCs on a DS1 NNI port to not more than three times the port speed, or not more than six times the port speed on a DS3 NNI port.

8.9.6 Except as expressly provided herein, this Agreement does not address or alter in any way either Party's provision of Exchange Access Frame Relay Service or interLATA Frame Relay Service. All charges by each Party to the other for carriage of Exchange Access Frame Relay Service or interLATA Frame Relay Service are included in the BellSouth access tariff BellSouth Tariff FCC No. 1.

8.10 Talk America will identify and report quarterly to BellSouth the PLCU of the Frame Relay facilities it uses, per Section 8.5.3 above.

8.11 Either Party may request a review or audit of the various service components, consistent with the provisions of section E2 of the BellSouth State Access Services tariffs or Section 2 of the BellSouth FCC No.1 Tariff.

8.12 If during the term of this Agreement, BellSouth obtains authority to provide interLATA Frame Relay in any State, the Parties agree to renegotiate this arrangement for the exchange of Frame Relay Service Traffic within one hundred eighty (180) days of the date BellSouth receives interLATA authority. In the event the Parties fail to renegotiate this Section 8 within the one hundred eighty day period, they will submit this matter to the appropriate State commission(s) for resolution.

9. OPERATIONAL SUPPORT SYSTEMS (OSS)

9.1 The terms, conditions and rates for OSS are as set forth in FCC Tariff, Section 5 for Access Service Records – Access Order Modifications.

Exhibit B

Basic Architecture

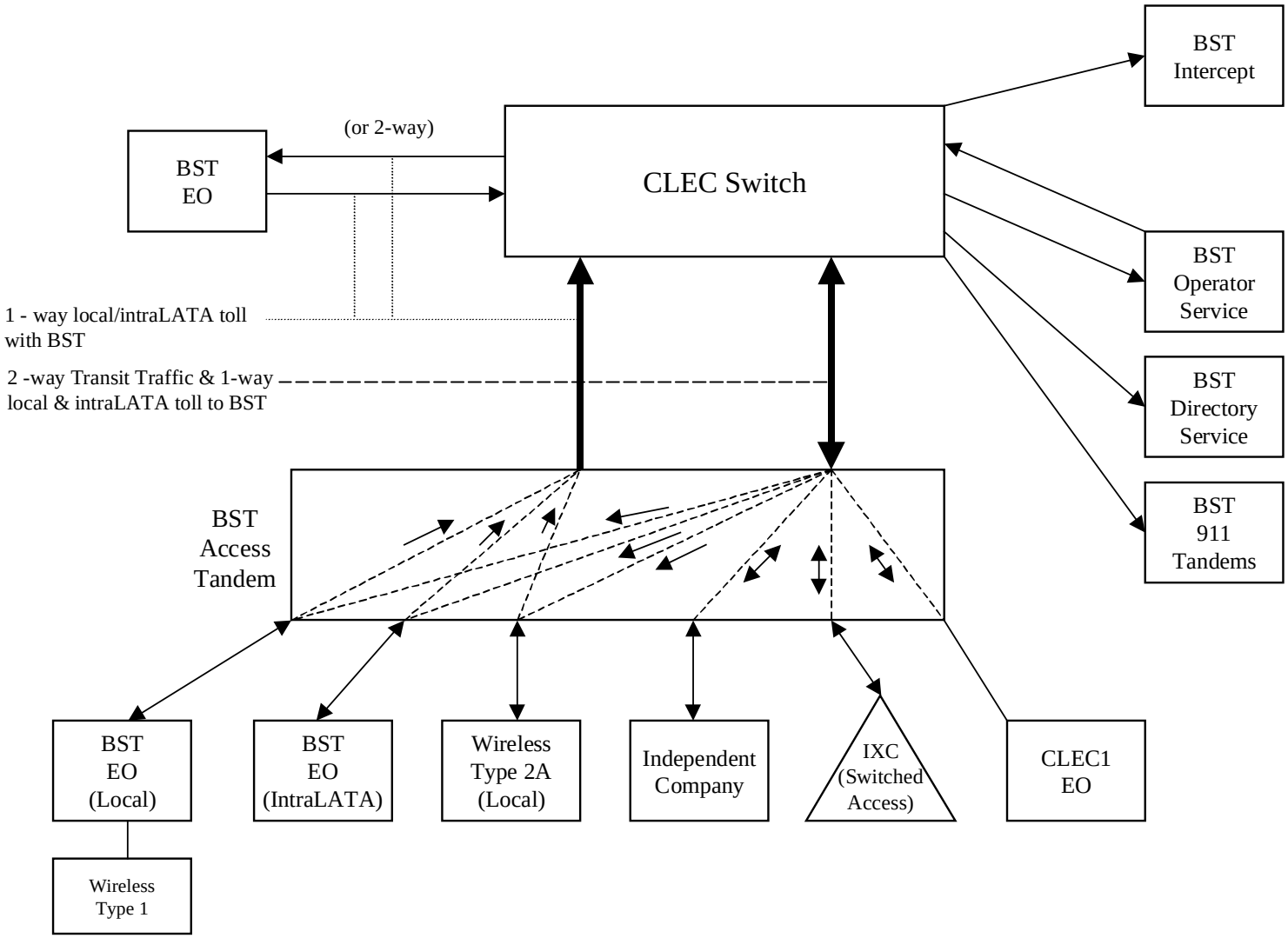

Exhibit C

One-Way Architecture

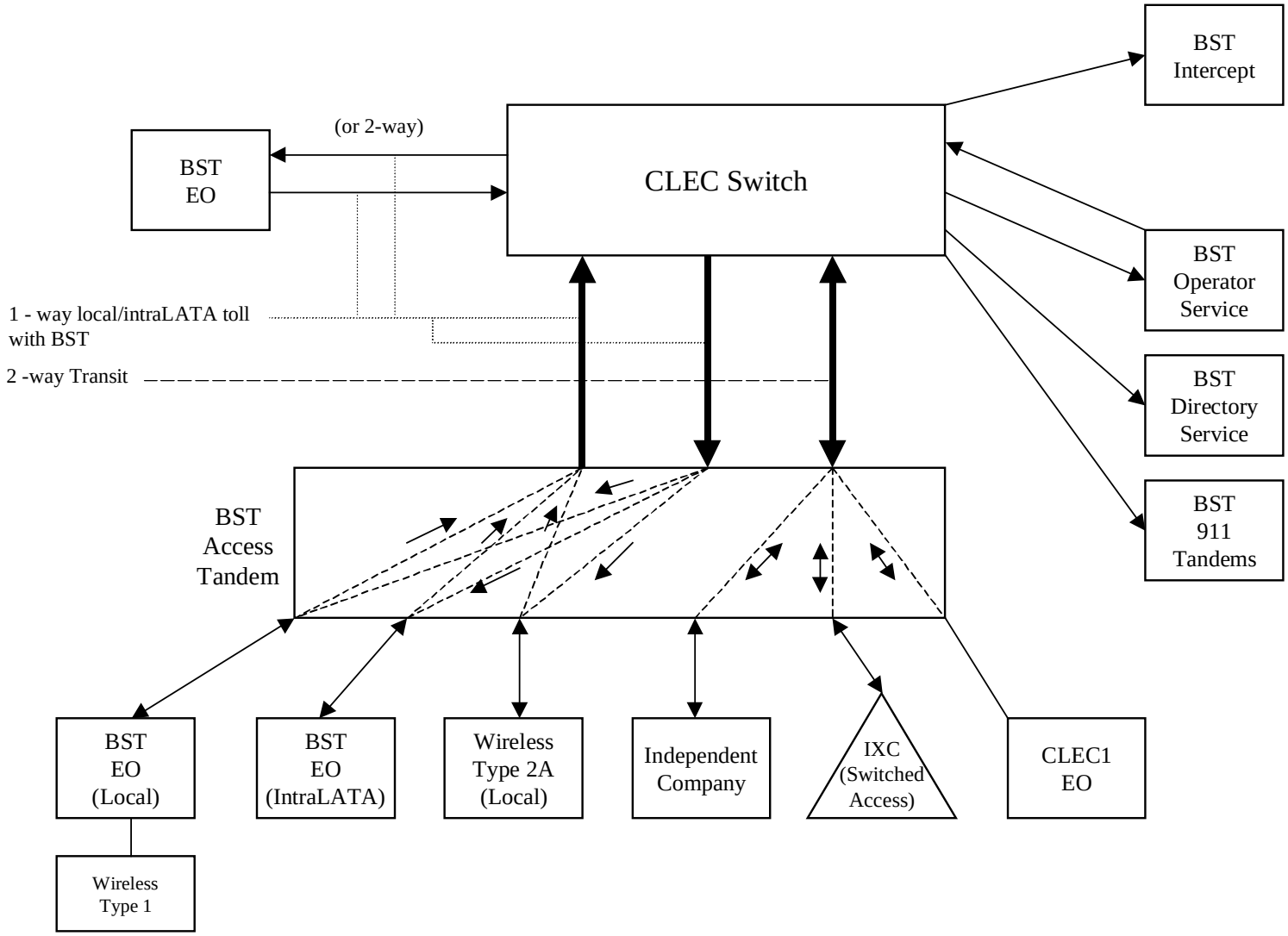

Exhibit D

Two-Way Architecture

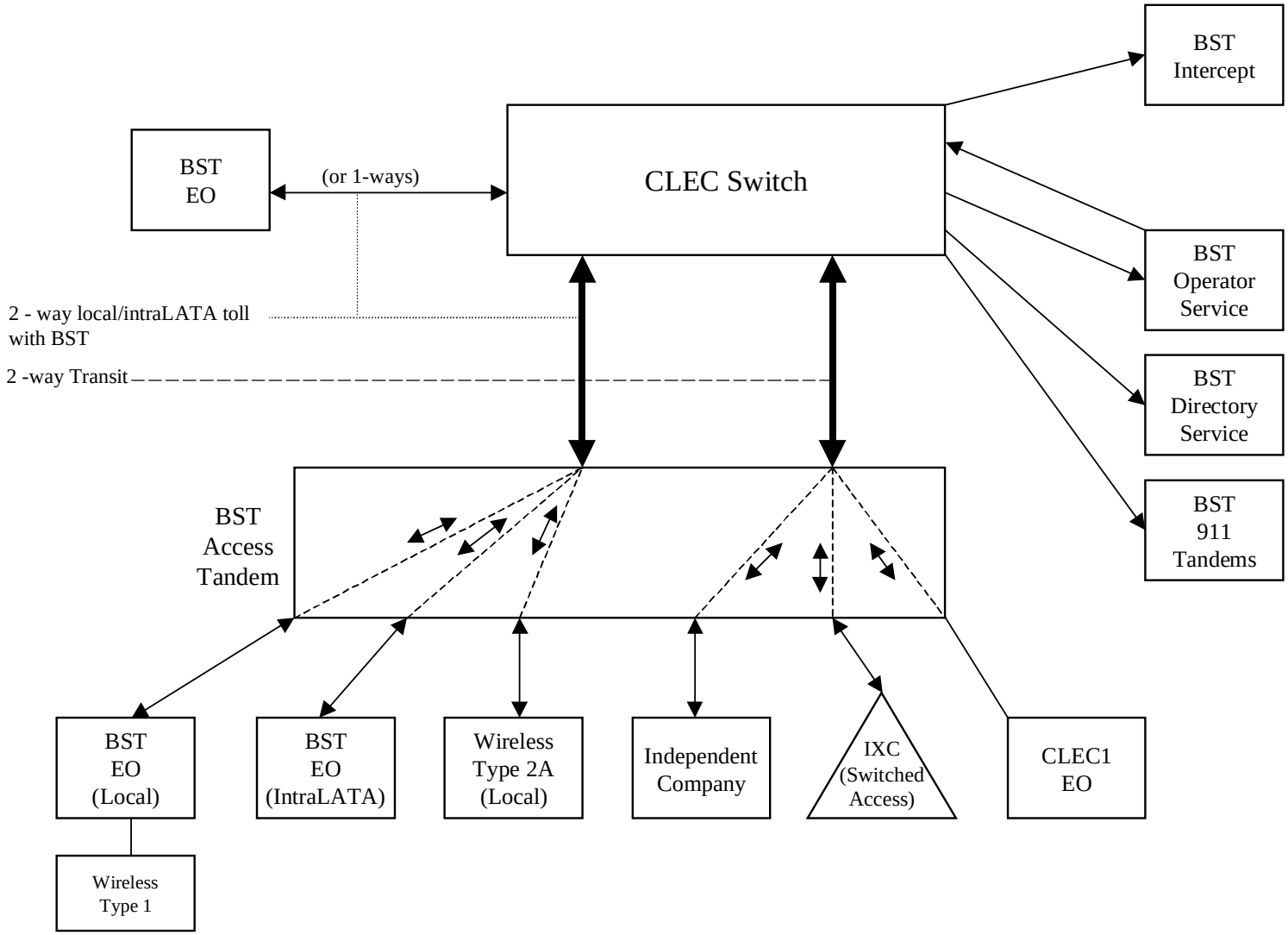

Exhibit E

Supergroup Architecture

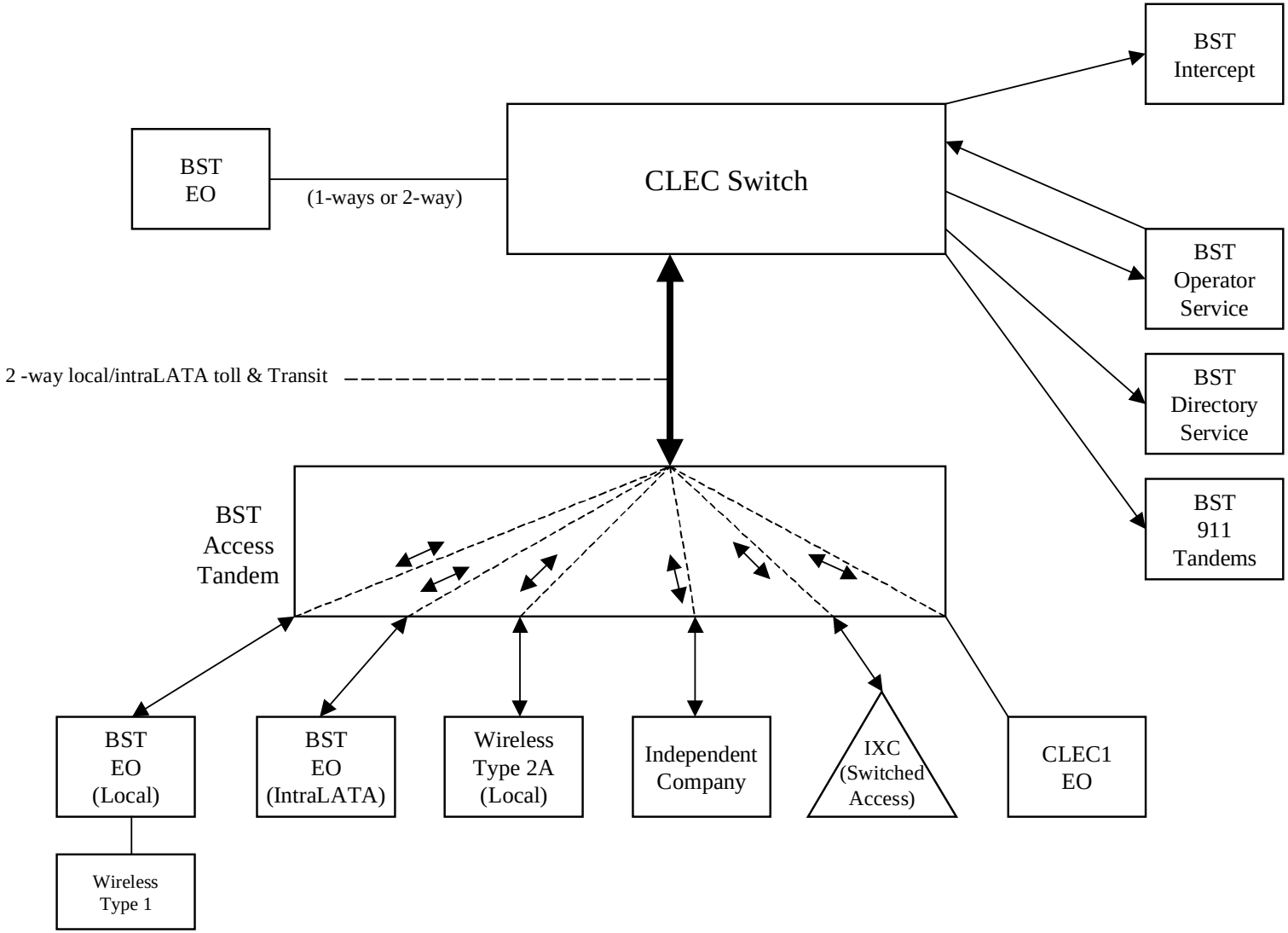

LOCAL INTERCONNECTION - Alabama													Attachment: 3		Exhibit: A	
CATEGORY	RATE ELEMENTS	Interim	Zone	BCS	USOC	RATES($)					Svc Order Submitted Elec per LSR	Svc Order Submitted Manually per LSR	Incremental Charge - Manual Svc Order vs. Electronic-1st	Incremental Charge - Manual Svc Order vs. Electronic-Add'l	Incremental Charge - Manual Svc Order vs. Electronic-Disc 1st	Incremental Charge - Manual Svc Order vs. Electronic-Disc Add'l
						Rec	Nonrecurring		Nonrecurring Disconnect		OSS Rates($)					
							First	Add'l	First	Add'l	SOMEC	SOMAN	SOMAN	SOMAN	SOMAN	SOMAN
LOCAL INTERCONNECTION (CALL TRANSPORT AND TERMINATION)																
NOTE: "bk" beside a rate indicates that the Parties have agreed to bill and keep for that element pursuant to the terms and conditions in Attachment 3.																
TANDEM SWITCHING																
	Tandem Switching Function Per MOU			OHD		0.0005692bk										
	Multiple Tandem Switching, per MOU (applies to intial tandem only)			OHD		0.0005692bk										
	Tandem Intermediary Charge, per MOU*			OHD		0.0015										
*** This charge is applicable only to transit traffic and is applied in addition to applicable switching and/or interconnection charges.**																
TRUNK CHARGE																
	Installation Trunk Side Service - per DS0			OHD	TPP++		333.69	56.91								
	Dedicated End Office Trunk Port Service-per DS0**			OHD	TDE0P	0.00										
	Dedicated End Office Trunk Port Service-per DS1**			0H1 OH1MS	TDE1P	0.00										
	Dedicated Tandem Trunk Port Service-per DS0**			OHD	TDW0P	0.00										
	Dedicated Tandem Trunk Port Service-per DS1**			OH1 OH1MS	TDW1P	0.00										
**** This rate element is recovered on a per MOU basis and is included in the End Office Switching and Tandem Switching, per MOU rate elements**																
COMMON TRANSPORT (Shared)																
	Common Transport - Per Mile, Per MOU			OHD		0.0000026bk										
	Common Transport - Facilities Termination Per MOU			OHD		0.0003685bk										
LOCAL INTERCONNECTION (DEDICATED TRANSPORT)																
INTEROFFICE CHANNEL - DEDICATED TRANSPORT																
	Interoffice Channel - Dedicated Transport - 2-Wire Voice Grade - Per Mile per month			OHL, OHM	1L5NF	0.0101										
	Interoffice Channel - Dedicated Transport- 2- Wire Voice Grade - Facility Termination per month			OHL, OHM	1L5NF	24.15	54.82		13.79							
	Interoffice Channel - Dedicated Transport - 56 kbps - per mile per month			OHL, OHM	1L5NK	0.0101										
	Interoffice Channel - Dedicated Transport - 56 kbps - Facility Termination per month			OHL, OHM	1L5NK	17.28	54.82		13.79							
	Interoffice Channel - Dedicated Transport - 64 kbps - per mile per month			OHL, OHM	1L5NK	0.0101										
	Interoffice Channel - Dedicated Transport - 64 kbps - Facility Termination per month			OHL, OHM	1L5NK	17.28	54.82		13.79							
	Interoffice Channel - Dedicated Channel - DS1 - Per Mile per month			OH1, OH1MS	1L5NL	0.2067										
	Interoffice Channel - Dedicated Tranport - DS1 - Facility Termination per month			OH1, OH1MS	1L5NL	68.75	163.61		28.88							
	Interoffice Channel - Dedicated Transport - DS3 - Per Mile per month			OH3, OH3MS	1L5NM	4.67										
	Interoffice Channel - Dedicated Transport - DS3 - Facility Termination per month			OH3, OH3MS	1L5NM	804.02	325.51		116.91							
LOCAL CHANNEL - DEDICATED TRANSPORT																
	Local Channel - Dedicated - 2-Wire Voice Grade per month			OHL, OHM	TEFV2	15.96	386.19	66.33	73.28	6.39						
	Local Channel - Dedicated - 4-Wire Voice Grade per month			OHL, OHM	TEFV4	17.06	387.06	67.20	74.22	7.33						
	Local Channel - Dedicated - DS1 per month			OH1	TEFHG	41.52	354.94	307.43	44.38	30.52						
	Local Channel - Dedicated - DS3 Facility Termination per month			OH3	TEFHJ	476.04	903.03	527.87	238.97	167.16						
LOCAL INTERCONNECTION MID-SPAN MEET																
NOTE: If Access service ride Mid-Span Meet, one-half the tariffed service Local Channel rate is applicable.																
	Local Channel - Dedicated - DS1 per month			OH1MS	TEFHG	0.00	0.00									
	Local Channel - Dedicated - DS3 per month			OH3MS	TEFHJ	0.00	0.00									
MULTIPLEXERS																
	Channelization - DS1 to DS0 Channel System			OH1, OH1MS	SATN1	122.50	182.08	125.14	21.07	19.58						
	DS3 to DS1 Channel System per month			OH3, OH3MS	SATNS	201.37	356.28	187.94	66.51	63.65						
	DS3 Interface Unit (DS1 COCI) per month			OH1, OH1MS	SATCO	15.39	13.15	9.43								
Notes: If no rate is identified in the contract, the rates, terms, and conditions for the specific service or function will be as set forth in applicable BellSouth tariff.																

LOCAL INTERCONNECTION - Florida													Attachment: 3		Exhibit: A	
CATEGORY	RATE ELEMENTS	Interim	Zone	BCS	USOC	RATES($)					Svc Order Submitted Elec per LSR	Svc Order Submitted Manually per LSR	Incremental Charge - Manual Svc Order vs. Electronic-1st	Incremental Charge - Manual Svc Order vs. Electronic-Add'l	Incremental Charge - Manual Svc Order vs. Electronic-Disc 1st	Incremental Charge - Manual Svc Order vs. Electronic-Disc Add'l
						Rec	Nonrecurring		Nonrecurring Disconnect		OSS Rates($)					
							First	Add'l	First	Add'l	SOMEC	SOMAN	SOMAN	SOMAN	SOMAN	SOMAN
LOCAL INTERCONNECTION (CALL TRANSPORT AND TERMINATION)																
NOTE: "bk" beside a rate indicates that the Parties have agreed to bill and keep for that element pursuant to the terms and conditions in Attachment 3.																
TANDEM SWITCHING																
	Tandem Switching Function Per MOU			OHD		0.0006019bk										
	Multiple Tandem Switching, per MOU (applies to intial tandem only)			OHD		0.0006019bk										
	Tandem Intermediary Charge, per MOU*			OHD		0.0015										
*** This charge is applicable only to transit traffic and is applied in addition to applicable switching and/or interconnection charges.**																
TRUNK CHARGE																
	Installation Trunk Side Service - per DS0			OHD	TPP++		336.43	57.38								
	Dedicated End Office Trunk Port Service-per DS0**			OHD	TDE0P	0.00										
	Dedicated End Office Trunk Port Service-per DS1**			0H1 OH1MS	TDE1P	0.00										
	Dedicated Tandem Trunk Port Service-per DS0**			OHD	TDW0P	0.00										
	Dedicated Tandem Trunk Port Service-per DS1**			OH1 OH1MS	TDW1P	0.00										
**** This rate element is recovered on a per MOU basis and is included in the End Office Switching and Tandem Switching, per MOU rate elements**																
COMMON TRANSPORT (Shared)																
	Common Transport - Per Mile, Per MOU			OHD		0.0000035bk										
	Common Transport - Facilities Termination Per MOU			OHD		0.0004372bk										
LOCAL INTERCONNECTION (DEDICATED TRANSPORT)																
INTEROFFICE CHANNEL - DEDICATED TRANSPORT																
	Interoffice Channel - Dedicated Transport - 2-Wire Voice Grade - Per Mile per month			OHL, OHM	1L5NF	0.0091										
	Interoffice Channel - Dedicated Transport- 2- Wire Voice Grade - Facility Termination per month			OHL, OHM	1L5NF	25.32	31.78		7.03							
	Interoffice Channel - Dedicated Transport - 56 kbps - per mile per month			OHL, OHM	1L5NK	0.0091										
	Interoffice Channel - Dedicated Transport - 56 kbps - Facility Termination per month			OHL, OHM	1L5NK	18.44	31.78		7.03							
	Interoffice Channel - Dedicated Transport - 64 kbps - per mile per month			OHL, OHM	1L5NK	0.0091										
	Interoffice Channel - Dedicated Transport - 64 kbps - Facility Termination per month			OHL, OHM	1L5NK	18.44	31.78		7.03							
	Interoffice Channel - Dedicated Channel - DS1 - Per Mile per month			OH1, OH1MS	1L5NL	0.1856										
	Interoffice Channel - Dedicated Tranport - DS1 - Facility Termination per month			OH1, OH1MS	1L5NL	88.44	98.47		19.05							
	Interoffice Channel - Dedicated Transport - DS3 - Per Mile per month			OH3, OH3MS	1L5NM	3.87										
	Interoffice Channel - Dedicated Transport - DS3 - Facility Termination per month			OH3, OH3MS	1L5NM	1,071.00	219.28		70.56							
LOCAL CHANNEL - DEDICATED TRANSPORT																
	Local Channel - Dedicated - 2-Wire Voice Grade per month			OHL, OHM	TEFV2	21.94	265.84	46.97	37.63	4.00						
	Local Channel - Dedicated - 4-Wire Voice Grade per month			OHL, OHM	TEFV4	22.81	266.54	47.67	44.22	5.33						
	Local Channel - Dedicated - DS1 per month			OH1	TEFHG	35.28	216.65	183.54	24.30	16.95						
	Local Channel - Dedicated - DS3 Facility Termination per month			OH3	TEFHJ	531.91	556.37	343.01	139.13	96.84						
LOCAL INTERCONNECTION MID-SPAN MEET																
NOTE: If Access service ride Mid-Span Meet, one-half the tariffed service Local Channel rate is applicable.																
	Local Channel - Dedicated - DS1 per month			OH1MS	TEFHG	0.00	0.00									
	Local Channel - Dedicated - DS3 per month			OH3MS	TEFHJ	0.00	0.00									
MULTIPLEXERS																
	Channelization - DS1 to DS0 Channel System			OH1, OH1MS	SATN1	146.77	101.42	71.62	11.09	10.49						
	DS3 to DS1 Channel System per month			OH3, OH3MS	SATNS	211.19	199.28	118.64	40.34	39.07						
	DS3 Interface Unit (DS1 COCI) per month			OH1, OH1MS	SATCO	13.76	10.07	7.08								
Notes: If no rate is identified in the contract, the rates, terms, and conditions for the specific service or function will be as set forth in applicable BellSouth tariff.																

LOCAL INTERCONNECTION - Georgia													Attachment: 3		Exhibit: A	
CATEGORY	RATE ELEMENTS	Interim	Zone	BCS	USOC	RATES($)					Svc Order Submitted Elec per LSR	Svc Order Submitted Manually per LSR	Incremental Charge - Manual Svc Order vs. Electronic-1st	Incremental Charge - Manual Svc Order vs. Electronic-Add'l	Incremental Charge - Manual Svc Order vs. Electronic-Disc 1st	Incremental Charge - Manual Svc Order vs. Electronic-Disc Add'l
						Rec	Nonrecurring		Nonrecurring Disconnect		OSS Rates($)					
							First	Add'l	First	Add'l	SOMEC	SOMAN	SOMAN	SOMAN	SOMAN	SOMAN
LOCAL INTERCONNECTION (CALL TRANSPORT AND TERMINATION)																
NOTE: "bk" beside a rate indicates that the Parties have agreed to bill and keep for that element pursuant to the terms and conditions in Attachment 3.																
TANDEM SWITCHING																
	Tandem Switching Function Per MOU			OHD		0.0011009bk										
	Multiple Tandem Switching, per MOU (applies to intial tandem only)			OHD		0.0011009bk										
	Tandem Intermediary Charge, per MOU*			OHD		0.0015										
*** This charge is applicable only to transit traffic and is applied in addition to applicable switching and/or interconnection charges.**																
TRUNK CHARGE																
	Installation Trunk Side Service - per DS0			OHD	TPP++		333.28	56.84								
	Dedicated End Office Trunk Port Service-per DS0**			OHD	TDE0P	0.00										
	Dedicated End Office Trunk Port Service-per DS1**			0H1 OH1MS	TDE1P	0.00										
	Dedicated Tandem Trunk Port Service-per DS0**			OHD	TDW0P	0.00										
	Dedicated Tandem Trunk Port Service-per DS1**			OH1 OH1MS	TDW1P	0.00										
**** This rate element is recovered on a per MOU basis and is included in the End Office Switching and Tandem Switching, per MOU rate elements**																
COMMON TRANSPORT (Shared)																
	Common Transport - Per Mile, Per MOU			OHD		0.000008bk										
	Common Transport - Facilities Termination Per MOU			OHD		0.0004152bk										
LOCAL INTERCONNECTION (DEDICATED TRANSPORT)																
INTEROFFICE CHANNEL - DEDICATED TRANSPORT																
	Interoffice Channel - Dedicated Transport - 2-Wire Voice Grade - Per Mile per month			OHL, OHM	1L5NF	0.0222										
	Interoffice Channel - Dedicated Transport- 2- Wire Voice Grade - Facility Termination per month			OHL, OHM	1L5NF	17.07	36.08									
	Interoffice Channel - Dedicated Transport - 56 kbps - per mile per month			OHL, OHM	1L5NK	0.0222										
	Interoffice Channel - Dedicated Transport - 56 kbps - Facility Termination per month			OHL, OHM	1L5NK	16.45	36.08									
	Interoffice Channel - Dedicated Transport - 64 kbps - per mile per month			OHL, OHM	1L5NK	0.0222										
	Interoffice Channel - Dedicated Transport - 64 kbps - Facility Termination per month			OHL, OHM	1L5NK	16.45	36.08									
	Interoffice Channel - Dedicated Channel - DS1 - Per Mile per month			OH1, OH1MS	1L5NL	0.4523										
	Interoffice Channel - Dedicated Tranport - DS1 - Facility Termination per month			OH1, OH1MS	1L5NL	78.47	111.75									
	Interoffice Channel - Dedicated Transport - DS3 - Per Mile per month			OH3, OH3MS	1L5NM	2.72										
	Interoffice Channel - Dedicated Transport - DS3 - Facility Termination per month			OH3, OH3MS	1L5NM	788.00	330.77									
LOCAL CHANNEL - DEDICATED TRANSPORT																
	Local Channel - Dedicated - 2-Wire Voice Grade per month			OHL, OHM	TEFV2	13.91	382.95	62.40								
	Local Channel - Dedicated - 4-Wire Voice Grade per month			OHL, OHM	TEFV4	14.99	368.44	64.05								
	Local Channel - Dedicated - DS1 per month			OH1	TEFHG	38.36	356.15	312.89								
	Local Channel - Dedicated - DS3 Facility Termination per month			OH3	TEFHJ	515.91	639.50	426.31								
LOCAL INTERCONNECTION MID-SPAN MEET																
NOTE: If Access service ride Mid-Span Meet, one-half the tariffed service Local Channel rate is applicable.																
	Local Channel - Dedicated - DS1 per month			OH1MS	TEFHG	0.00	0.00									
	Local Channel - Dedicated - DS3 per month			OH3MS	TEFHJ	0.00	0.00									
MULTIPLEXERS																
	Channelization - DS1 to DS0 Channel System			OH1, OH1MS	SATN1	126.22	198.22	123.59								
	DS3 to DS1 Channel System per month			OH3, OH3MS	SATNS	182.04	280.66	195.33								
	DS3 Interface Unit (DS1 COCI) per month			OH1, OH1MS	SATCO	11.02	12.02	8.66								
Notes: If no rate is identified in the contract, the rates, terms, and conditions for the specific service or function will be as set forth in applicable BellSouth tariff.																

LOCAL INTERCONNECTION - Kentucky													Attachment: 3		Exhibit: A	
CATEGORY	RATE ELEMENTS	Interim	Zone	BCS	USOC	RATES($)					Svc Order Submitted Elec per LSR	Svc Order Submitted Manually per LSR	Incremental Charge - Manual Svc Order vs. Electronic-1st	Incremental Charge - Manual Svc Order vs. Electronic-Add'l	Incremental Charge - Manual Svc Order vs. Electronic-Disc 1st	Incremental Charge - Manual Svc Order vs. Electronic-Disc Add'l
						Rec	Nonrecurring		Nonrecurring Disconnect		OSS Rates($)					
							First	Add'l	First	Add'l	SOMEC	SOMAN	SOMAN	SOMAN	SOMAN	SOMAN
LOCAL INTERCONNECTION (CALL TRANSPORT AND TERMINATION)																
NOTE: "bk" beside a rate indicates that the Parties have agreed to bill and keep for that element pursuant to the terms and conditions in Attachment 3.																
TANDEM SWITCHING																
	Tandem Switching Function Per MOU			OHD		0.0006772bk										
	Multiple Tandem Switching, per MOU (applies to intial tandem only)			OHD		0.0006772bk										
	Tandem Intermediary Charge, per MOU*			OHD		0.0015										
*** This charge is applicable only to transit traffic and is applied in addition to applicable switching and/or interconnection charges.**																
TRUNK CHARGE																
	Installation Trunk Side Service - per DS0			OHD	TPP++		334.09	57.12								
	Dedicated End Office Trunk Port Service-per DS0**			OHD	TDE0P	0.00										
	Dedicated End Office Trunk Port Service-per DS1**			0H1 OH1MS	TDE1P	0.00										
	Dedicated Tandem Trunk Port Service-per DS0**			OHD	TDW0P	0.00										
	Dedicated Tandem Trunk Port Service-per DS1**			OH1 OH1MS	TDW1P	0.00										
**** This rate element is recovered on a per MOU basis and is included in the End Office Switching and Tandem Switching, per MOU rate elements**																
COMMON TRANSPORT (Shared)																
	Common Transport - Per Mile, Per MOU			OHD		0.0000030bk										
	Common Transport - Facilities Termination Per MOU			OHD		0.0007466bk										
LOCAL INTERCONNECTION (DEDICATED TRANSPORT)																
INTEROFFICE CHANNEL - DEDICATED TRANSPORT																
	Interoffice Channel - Dedicated Transport - 2-Wire Voice Grade - Per Mile per month			OHL, OHM	1L5NF	0.01										
	Interoffice Channel - Dedicated Transport- 2- Wire Voice Grade - Facility Termination per month			OHL, OHM	1L5NF	29.11	47.34		22.77							
	Interoffice Channel - Dedicated Transport - 56 kbps - per mile per month			OHL, OHM	1L5NK	0.0115										
	Interoffice Channel - Dedicated Transport - 56 kbps - Facility Termination per month			OHL, OHM	1L5NK	20.97	47.35		22.77							
	Interoffice Channel - Dedicated Transport - 64 kbps - per mile per month			OHL, OHM	1L5NK	0.0115										
	Interoffice Channel - Dedicated Transport - 64 kbps - Facility Termination per month			OHL, OHM	1L5NK	20.97	47.35		22.77							
	Interoffice Channel - Dedicated Channel - DS1 - Per Mile per month			OH1, OH1MS	1L5NL	0.23										
	Interoffice Channel - Dedicated Tranport - DS1 - Facility Termination per month			OH1, OH1MS	1L5NL	96.04	105.52		23.09							
	Interoffice Channel - Dedicated Transport - DS3 - Per Mile per month			OH3, OH3MS	1L5NM	4.97										
	Interoffice Channel - Dedicated Transport - DS3 - Facility Termination per month			OH3, OH3MS	1L5NM	1,175.15	335.40		89.57							
LOCAL CHANNEL - DEDICATED TRANSPORT																
	Local Channel - Dedicated - 2-Wire Voice Grade per month			OHL, OHM	TEFV2	18.57	265.78	46.96	46.79	4.98						
	Local Channel - Dedicated - 4-Wire Voice Grade per month			OHL, OHM	TEFV4	19.86	266.48	47.65	47.54	5.73						
	Local Channel - Dedicated - DS1 per month			OH1	TEFHG	40.46	209.60	176.51	30.21	21.07						
	Local Channel - Dedicated - DS3 Facility Termination per month			OH3	TEFHJ	576.05	551.38	338.08	173.00	120.42						
LOCAL INTERCONNECTION MID-SPAN MEET																
NOTE: If Access service ride Mid-Span Meet, one-half the tariffed service Local Channel rate is applicable.																
	Local Channel - Dedicated - DS1 per month			OH1MS	TEFHG	0.00	0.00									
	Local Channel - Dedicated - DS3 per month			OH3MS	TEFHJ	0.00	0.00									
MULTIPLEXERS																
	Channelization - DS1 to DS0 Channel System			OH1, OH1MS	SATN1	113.33	101.40	71.60	13.79	13.04						
	DS3 to DS1 Channel System per month			OH3, OH3MS	SATNS	158.20	199.23	118.62	50.16	48.59						
	DS3 Interface Unit (DS1 COCI) per month			OH1, OH1MS	SATCO	11.80	10.07	7.08								
Notes: If no rate is identified in the contract, the rates, terms, and conditions for the specific service or function will be as set forth in applicable BellSouth tariff.																

LOCAL INTERCONNECTION - Louisiana													Attachment: 3		Exhibit: A	
CATEGORY	RATE ELEMENTS	Interim	Zone	BCS	USOC	RATES($)					Svc Order Submitted Elec per LSR	Svc Order Submitted Manually per LSR	Incremental Charge - Manual Svc Order vs. Electronic-1st	Incremental Charge - Manual Svc Order vs. Electronic-Add'l	Incremental Charge - Manual Svc Order vs. Electronic-Disc 1st	Incremental Charge - Manual Svc Order vs. Electronic-Disc Add'l
						Rec	Nonrecurring		Nonrecurring Disconnect		OSS Rates($)					
							First	Add'l	First	Add'l	SOMEC	SOMAN	SOMAN	SOMAN	SOMAN	SOMAN
LOCAL INTERCONNECTION (CALL TRANSPORT AND TERMINATION)																
NOTE: "bk" beside a rate indicates that the Parties have agreed to bill and keep for that element pursuant to the terms and conditions in Attachment 3.																
TANDEM SWITCHING																
	Tandem Switching Function Per MOU			OHD		0.0005507bk										
	Multiple Tandem Switching, per MOU (applies to intial tandem only)			OHD		0.0005507bk										
	Tandem Intermediary Charge, per MOU*			OHD		0.0015										
*** This charge is applicable only to transit traffic and is applied in addition to applicable switching and/or interconnection charges.**																
TRUNK CHARGE																
	Installation Trunk Side Service - per DS0			OHD	TPP++		334.94	56.98								
	Dedicated End Office Trunk Port Service-per DS0**			OHD	TDE0P	0.00										
	Dedicated End Office Trunk Port Service-per DS1**			0H1 OH1MS	TDE1P	0.00										
	Dedicated Tandem Trunk Port Service-per DS0**			OHD	TDW0P	0.00										
	Dedicated Tandem Trunk Port Service-per DS1**			OH1 OH1MS	TDW1P	0.00										
**** This rate element is recovered on a per MOU basis and is included in the End Office Switching and Tandem Switching, per MOU rate elements**																
COMMON TRANSPORT (Shared)																
	Common Transport - Per Mile, Per MOU			OHD		0.0000032bk										
	Common Transport - Facilities Termination Per MOU			OHD		0.0003748bk										
LOCAL INTERCONNECTION (DEDICATED TRANSPORT)																
INTEROFFICE CHANNEL - DEDICATED TRANSPORT																
	Interoffice Channel - Dedicated Transport - 2-Wire Voice Grade - Per Mile per month			OHL, OHM	1L5NF	0.013										
	Interoffice Channel - Dedicated Transport- 2- Wire Voice Grade - Facility Termination per month			OHL, OHM	1L5NF	22.60	26.62									
	Interoffice Channel - Dedicated Transport - 56 kbps - per mile per month			OHL, OHM	1L5NK	0.013										
	Interoffice Channel - Dedicated Transport - 56 kbps - Facility Termination per month			OHL, OHM	1L5NK	15.61	26.62									
	Interoffice Channel - Dedicated Transport - 64 kbps - per mile per month			OHL, OHM	1L5NK	0.013										
	Interoffice Channel - Dedicated Transport - 64 kbps - Facility Termination per month			OHL, OHM	1L5NK	15.61	26.62									
	Interoffice Channel - Dedicated Channel - DS1 - Per Mile per month			OH1, OH1MS	1L5NL	0.2652										
	Interoffice Channel - Dedicated Tranport - DS1 - Facility Termination per month			OH1, OH1MS	1L5NL	70.47	79.44									
	Interoffice Channel - Dedicated Transport - DS3 - Per Mile per month			OH3, OH3MS	1L5NM	6.04										
	Interoffice Channel - Dedicated Transport - DS3 - Facility Termination per month			OH3, OH3MS	1L5NM	850.45	158.05									
LOCAL CHANNEL - DEDICATED TRANSPORT																
	Local Channel - Dedicated - 2-Wire Voice Grade per month			OHL, OHM	TEFV2	18.32	187.51	32.21								
	Local Channel - Dedicated - 4-Wire Voice Grade per month			OHL, OHM	TEFV4	19.41	187.94	32.63								
	Local Channel - Dedicated - DS1 per month			OH1	TEFHG	39.18	172.34	149.27								
	Local Channel - Dedicated - DS3 Facility Termination per month			OH3	TEFHJ	469.44	438.46	256.30								
LOCAL INTERCONNECTION MID-SPAN MEET																
NOTE: If Access service ride Mid-Span Meet, one-half the tariffed service Local Channel rate is applicable.																
	Local Channel - Dedicated - DS1 per month			OH1MS	TEFHG	0.00	0.00									
	Local Channel - Dedicated - DS3 per month			OH3MS	TEFHJ	0.00	0.00									
MULTIPLEXERS																
	Channelization - DS1 to DS0 Channel System			OH1, OH1MS	SATN1	105.09	88.41	60.76								
	DS3 to DS1 Channel System per month			OH3, OH3MS	SATNS	201.48	172.99	91.25								
	DS3 Interface Unit (DS1 COCI) per month			OH1, OH1MS	SATCO	11.78	6.39	4.58								
Notes: If no rate is identified in the contract, the rates, terms, and conditions for the specific service or function will be as set forth in applicable BellSouth tariff.																

LOCAL INTERCONNECTION - Mississippi													Attachment: 3		Exhibit: A	
CATEGORY	RATE ELEMENTS	Interim	Zone	BCS	USOC	RATES($)					Svc Order Submitted Elec per LSR	Svc Order Submitted Manually per LSR	Incremental Charge - Manual Svc Order vs. Electronic-1st	Incremental Charge - Manual Svc Order vs. Electronic-Add'l	Incremental Charge - Manual Svc Order vs. Electronic-Disc 1st	Incremental Charge - Manual Svc Order vs. Electronic-Disc Add'l
						Rec	Nonrecurring		Nonrecurring Disconnect		OSS Rates($)					
							First	Add'l	First	Add'l	SOMEC	SOMAN	SOMAN	SOMAN	SOMAN	SOMAN
LOCAL INTERCONNECTION (CALL TRANSPORT AND TERMINATION)																
NOTE: "bk" beside a rate indicates that the Parties have agreed to bill and keep for that element pursuant to the terms and conditions in Attachment 3.																
TANDEM SWITCHING																
	Tandem Switching Function Per MOU			OHD		0.0005379bk										
	Multiple Tandem Switching, per MOU (applies to intial tandem only)			OHD		0.0005379bk										
	Tandem Intermediary Charge, per MOU*			OHD		0.0015										
*** This charge is applicable only to transit traffic and is applied in addition to applicable switching and/or interconnection charges.**																
TRUNK CHARGE																
	Installation Trunk Side Service - per DS0			OHD	TPP++		334.11	56.98								
	Dedicated End Office Trunk Port Service-per DS0**			OHD	TDE0P	0.00										
	Dedicated End Office Trunk Port Service-per DS1**			0H1 OH1MS	TDE1P	0.00										
	Dedicated Tandem Trunk Port Service-per DS0**			OHD	TDW0P	0.00										
	Dedicated Tandem Trunk Port Service-per DS1**			OH1 OH1MS	TDW1P	0.00										
**** This rate element is recovered on a per MOU basis and is included in the End Office Switching and Tandem Switching, per MOU rate elements**																
COMMON TRANSPORT (Shared)																
	Common Transport - Per Mile, Per MOU			OHD		0.0000026bk										
	Common Transport - Facilities Termination Per MOU			OHD		0.0004541bk										
LOCAL INTERCONNECTION (DEDICATED TRANSPORT)																
INTEROFFICE CHANNEL - DEDICATED TRANSPORT																
	Interoffice Channel - Dedicated Transport - 2-Wire Voice Grade - Per Mile per month			OHL, OHM	1L5NF	0.0098										
	Interoffice Channel - Dedicated Transport- 2- Wire Voice Grade - Facility Termination per month			OHL, OHM	1L5NF	22.52	27.57		7.11							
	Interoffice Channel - Dedicated Transport - 56 kbps - per mile per month			OHL, OHM	1L5NK	0.0098										
	Interoffice Channel - Dedicated Transport - 56 kbps - Facility Termination per month			OHL, OHM	1L5NK	15.68	27.57		7.11							
	Interoffice Channel - Dedicated Transport - 64 kbps - per mile per month			OHL, OHM	1L5NK	0.0098										
	Interoffice Channel - Dedicated Transport - 64 kbps - Facility Termination per month			OHL, OHM	1L5NK	15.68	27.57		7.11							
	Interoffice Channel - Dedicated Channel - DS1 - Per Mile per month			OH1, OH1MS	1L5NL	0.201										
	Interoffice Channel - Dedicated Tranport - DS1 - Facility Termination per month			OH1, OH1MS	1L5NL	57.33	82.28		14.90							
	Interoffice Channel - Dedicated Transport - DS3 - Per Mile per month			OH3, OH3MS	1L5NM	4.76										
	Interoffice Channel - Dedicated Transport - DS3 - Facility Termination per month			OH3, OH3MS	1L5NM	641.90	163.70		60.29							
LOCAL CHANNEL - DEDICATED TRANSPORT																
	Local Channel - Dedicated - 2-Wire Voice Grade per month			OHL, OHM	TEFV2	14.91	194.22	33.36	37.79	3.30						
	Local Channel - Dedicated - 4-Wire Voice Grade per month			OHL, OHM	TEFV4	15.99	194.66	33.80	38.27	3.78						
	Local Channel - Dedicated - DS1 per month			OH1	TEFHG	36.83	178.50	154.61	22.89	15.74						
	Local Channel - Dedicated - DS3 Facility Termination per month			OH3	TEFHJ	413.87	454.13	264.47	123.23	86.19						
LOCAL INTERCONNECTION MID-SPAN MEET																
NOTE: If Access service ride Mid-Span Meet, one-half the tariffed service Local Channel rate is applicable.																
	Local Channel - Dedicated - DS1 per month			OH1MS	TEFHG	0.00	0.00									
	Local Channel - Dedicated - DS3 per month			OH3MS	TEFHJ	0.00	0.00									
MULTIPLEXERS																
	Channelization - DS1 to DS0 Channel System			OH1, OH1MS	SATN1	102.85	91.57	62.94	10.87	10.10						
	DS3 to DS1 Channel System per month			OH3, OH3MS	SATNS	170.63	179.17	94.52	34.30	32.82						
	DS3 Interface Unit (DS1 COCI) per month			OH1, OH1MS	SATCO	12.96	6.62	4.74								
Notes: If no rate is identified in the contract, the rates, terms, and conditions for the specific service or function will be as set forth in applicable BellSouth tariff.																

LOCAL INTERCONNECTION - North Carolina													Attachment: 3		Exhibit: A	
CATEGORY	RATE ELEMENTS	Interim	Zone	BCS	USOC	RATES($)					Svc Order Submitted Elec per LSR	Svc Order Submitted Manually per LSR	Incremental Charge - Manual Svc Order vs. Electronic-1st	Incremental Charge - Manual Svc Order vs. Electronic-Add'l	Incremental Charge - Manual Svc Order vs. Electronic-Disc 1st	Incremental Charge - Manual Svc Order vs. Electronic-Disc Add'l
						Rec	Nonrecurring		Nonrecurring Disconnect		OSS Rates($)					
							First	Add'l	First	Add'l	SOMEC	SOMAN	SOMAN	SOMAN	SOMAN	SOMAN
LOCAL INTERCONNECTION (CALL TRANSPORT AND TERMINATION)																
NOTE: "bk" beside a rate indicates that the Parties have agreed to bill and keep for that element pursuant to the terms and conditions in Attachment 3.																
TANDEM SWITCHING																
	Tandem Switching Function Per MOU			OHD		0.0012bk										
	Multiple Tandem Switching, per MOU (applies to intial tandem only)			OHD		0.0012bk										
	Tandem Intermediary Charge, per MOU*			OHD		0.0015										
*** This charge is applicable only to transit traffic and is applied in addition to applicable switching and/or interconnection charges.**																
TRUNK CHARGE																
	Installation Trunk Side Service - per DS0			OHD	TPP++		333.54	56.88								
	Dedicated End Office Trunk Port Service-per DS0**			OHD	TDE0P	0.00										
	Dedicated End Office Trunk Port Service-per DS1**			0H1 OH1MS	TDE1P	0.00										
	Dedicated Tandem Trunk Port Service-per DS0**			OHD	TDW0P	0.00										
	Dedicated Tandem Trunk Port Service-per DS1**			OH1 OH1MS	TDW1P	0.00										
**** This rate element is recovered on a per MOU basis and is included in the End Office Switching and Tandem Switching, per MOU rate elements**																
COMMON TRANSPORT (Shared)																
	Common Transport - Per Mile, Per MOU			OHD		0.00001bk										
	Common Transport - Facilities Termination Per MOU			OHD		0.00034bk										
LOCAL INTERCONNECTION (DEDICATED TRANSPORT)																
INTEROFFICE CHANNEL - DEDICATED TRANSPORT																
	Interoffice Channel - Dedicated Transport - 2-Wire Voice Grade - Per Mile per month			OHL, OHM	1L5NF	0.0282										
	Interoffice Channel - Dedicated Transport- 2- Wire Voice Grade - Facility Termination per month			OHL, OHM	1L5NF	18.00	52.58									
	Interoffice Channel - Dedicated Transport - 56 kbps - per mile per month			OHL, OHM	1L5NK	0.0282										
	Interoffice Channel - Dedicated Transport - 56 kbps - Facility Termination per month			OHL, OHM	1L5NK	17.40	52.58									
	Interoffice Channel - Dedicated Transport - 64 kbps - per mile per month			OHL, OHM	1L5NK	0.0282										
	Interoffice Channel - Dedicated Transport - 64 kbps - Facility Termination per month			OHL, OHM	1L5NK	17.40	52.58									
	Interoffice Channel - Dedicated Channel - DS1 - Per Mile per month			OH1, OH1MS	1L5NL	0.5753										
	Interoffice Channel - Dedicated Tranport - DS1 - Facility Termination per month			OH1, OH1MS	1L5NL	71.29	163.75									
	Interoffice Channel - Dedicated Transport - DS3 - Per Mile per month			OH3, OH3MS	1L5NM	12.98										
	Interoffice Channel - Dedicated Transport - DS3 - Facility Termination per month			OH3, OH3MS	1L5NM	720.38	579.55									
LOCAL CHANNEL - DEDICATED TRANSPORT																
	Local Channel - Dedicated - 2-Wire Voice Grade per month			OHL, OHM	TEFV2	14.82	553.80	89.69								
	Local Channel - Dedicated - 4-Wire Voice Grade per month			OHL, OHM	TEFV4	15.87	562.23	92.67								
	Local Channel - Dedicated - DS1 per month			OH1	TEFHG	35.68	534.48	462.69								
	Local Channel - Dedicated - DS3 Facility Termination per month			OH3	TEFHJ	498.87	562.25	527.88								
LOCAL INTERCONNECTION MID-SPAN MEET																
NOTE: If Access service ride Mid-Span Meet, one-half the tariffed service Local Channel rate is applicable.																
	Local Channel - Dedicated - DS1 per month			OH1MS	TEFHG	0.00	0.00									
	Local Channel - Dedicated - DS3 per month			OH3MS	TEFHJ	0.00	0.00									
MULTIPLEXERS																
	Channelization - DS1 to DS0 Channel System			OH1, OH1MS	SATN1	146.69	197.78	140.06								
	DS3 to DS1 Channel System per month			OH3, OH3MS	SATNS	233.10	403.97	234.40								
	DS3 Interface Unit (DS1 COCI) per month			OH1, OH1MS	SATCO	16.07	13.09	9.38								
Notes: If no rate is identified in the contract, the rates, terms, and conditions for the specific service or function will be as set forth in applicable BellSouth tariff.																

LOCAL INTERCONNECTION - South Carolina													Attachment: 3		Exhibit: A	
CATEGORY	RATE ELEMENTS	Interim	Zone	BCS	USOC	RATES($)					Svc Order Submitted Elec per LSR	Svc Order Submitted Manually per LSR	Incremental Charge - Manual Svc Order vs. Electronic-1st	Incremental Charge - Manual Svc Order vs. Electronic-Add'l	Incremental Charge - Manual Svc Order vs. Electronic-Disc 1st	Incremental Charge - Manual Svc Order vs. Electronic-Disc Add'l
						Rec	Nonrecurring		Nonrecurring Disconnect		OSS Rates($)					
							First	Add'l	First	Add'l	SOMEC	SOMAN	SOMAN	SOMAN	SOMAN	SOMAN
LOCAL INTERCONNECTION (CALL TRANSPORT AND TERMINATION)																
NOTE: "bk" beside a rate indicates that the Parties have agreed to bill and keep for that element pursuant to the terms and conditions in Attachment 3.																
TANDEM SWITCHING																
	Tandem Switching Function Per MOU			OHD		0.000736bk										
	Multiple Tandem Switching, per MOU (applies to intial tandem only)			OHD		0.000736bk										
	Tandem Intermediary Charge, per MOU*			OHD		0.0015										
*** This charge is applicable only to transit traffic and is applied in addition to applicable switching and/or interconnection charges.**																
TRUNK CHARGE																
	Installation Trunk Side Service - per DS0			OHD	TPP++		335.14	57.16								
	Dedicated End Office Trunk Port Service-per DS0**			OHD	TDE0P	0.00										
	Dedicated End Office Trunk Port Service-per DS1**			0H1 OH1MS	TDE1P	0.00										
	Dedicated Tandem Trunk Port Service-per DS0**			OHD	TDW0P	0.00										
	Dedicated Tandem Trunk Port Service-per DS1**			OH1 OH1MS	TDW1P	0.00										
**** This rate element is recovered on a per MOU basis and is included in the End Office Switching and Tandem Switching, per MOU rate elements**																
COMMON TRANSPORT (Shared)																
	Common Transport - Per Mile, Per MOU			OHD		0.0000045bk										
	Common Transport - Facilities Termination Per MOU			OHD		0.0004095bk										
LOCAL INTERCONNECTION (DEDICATED TRANSPORT)																
INTEROFFICE CHANNEL - DEDICATED TRANSPORT																
	Interoffice Channel - Dedicated Transport - 2-Wire Voice Grade - Per Mile per month			OHL, OHM	1L5NF	0.0167										
	Interoffice Channel - Dedicated Transport- 2- Wire Voice Grade - Facility Termination per month			OHL, OHM	1L5NF	24.30	40.63		16.77							
	Interoffice Channel - Dedicated Transport - 56 kbps - per mile per month			OHL, OHM	1L5NK	0.0167										
	Interoffice Channel - Dedicated Transport - 56 kbps - Facility Termination per month			OHL, OHM	1L5NK	16.76	40.63		16.77							
	Interoffice Channel - Dedicated Transport - 64 kbps - per mile per month			OHL, OHM	1L5NK	0.0167										
	Interoffice Channel - Dedicated Transport - 64 kbps - Facility Termination per month			OHL, OHM	1L5NK	16.76	40.63		16.77							
	Interoffice Channel - Dedicated Channel - DS1 - Per Mile per month			OH1, OH1MS	1L5NL	0.3415										
	Interoffice Channel - Dedicated Tranport - DS1 - Facility Termination per month			OH1, OH1MS	1L5NL	77.14	89.47		16.39							
	Interoffice Channel - Dedicated Transport - DS3 - Per Mile per month			OH3, OH3MS	1L5NM	8.02										
	Interoffice Channel - Dedicated Transport - DS3 - Facility Termination per month			OH3, OH3MS	1L5NM	880.65	279.37		60.33							
LOCAL CHANNEL - DEDICATED TRANSPORT																
	Local Channel - Dedicated - 2-Wire Voice Grade per month			OHL, OHM	TEFV2	15.33	193.53	33.24	36.72	3.21						
	Local Channel - Dedicated - 4-Wire Voice Grade per month			OHL, OHM	TEFV4	16.54	193.97	33.68	37.19	3.68						
	Local Channel - Dedicated - DS1 per month			OH1	TEFHG	42.62	177.87	154.06	22.24	15.30						
	Local Channel - Dedicated - DS3 Facility Termination per month			OH3	TEFHJ	446.00	452.52	264.53	119.75	83.77						
LOCAL INTERCONNECTION MID-SPAN MEET																
NOTE: If Access service ride Mid-Span Meet, one-half the tariffed service Local Channel rate is applicable.																
	Local Channel - Dedicated - DS1 per month			OH1MS	TEFHG	0.00	0.00									
	Local Channel - Dedicated - DS3 per month			OH3MS	TEFHJ	0.00	0.00									
MULTIPLEXERS																
	Channelization - DS1 to DS0 Channel System			OH1, OH1MS	SATN1	107.57	91.24	62.71	10.56	9.81						
	DS3 to DS1 Channel System per month			OH3, OH3MS	SATNS	144.02	178.54	94.18	33.33	31.90						
	DS3 Interface Unit (DS1 COCI) per month			OH1, OH1MS	SATCO	8.64	6.59	4.73								
Notes: If no rate is identified in the contract, the rates, terms, and conditions for the specific service or function will be as set forth in applicable BellSouth tariff.																

LOCAL INTERCONNECTION - Tennessee													Attachment: 3		Exhibit: A	
CATEGORY	RATE ELEMENTS	Interim	Zone	BCS	USOC	RATES($)					Svc Order Submitted Elec per LSR	Svc Order Submitted Manually per LSR	Incremental Charge - Manual Svc Order vs. Electronic-1st	Incremental Charge - Manual Svc Order vs. Electronic-Add'l	Incremental Charge - Manual Svc Order vs. Electronic-Disc 1st	Incremental Charge - Manual Svc Order vs. Electronic-Disc Add'l
						Rec	Nonrecurring		Nonrecurring Disconnect		OSS Rates($)					
							First	Add'l	First	Add'l	SOMEC	SOMAN	SOMAN	SOMAN	SOMAN	SOMAN
LOCAL INTERCONNECTION (CALL TRANSPORT AND TERMINATION)																
NOTE: "bk" beside a rate indicates that the Parties have agreed to bill and keep for that element pursuant to the terms and conditions in Attachment 3.																
TANDEM SWITCHING																
	Tandem Switching Function Per MOU			OHD		0.0009778bk										
	Multiple Tandem Switching, per MOU (applies to intial tandem only)			OHD		0.0009778bk										
	Tandem Intermediary Charge, per MOU*			OHD		0.0015										
*** This charge is applicable only to transit traffic and is applied in addition to applicable switching and/or interconnection charges.**																
TRUNK CHARGE																
	Installation Trunk Side Service - per DS0			OHD	TPP++		334.29	57.01								
	Dedicated End Office Trunk Port Service-per DS0**			OHD	TDE0P	0.00										
	Dedicated End Office Trunk Port Service-per DS1**			0H1 OH1MS	TDE1P	0.00										
	Dedicated Tandem Trunk Port Service-per DS0**			OHD	TDW0P	0.00										
	Dedicated Tandem Trunk Port Service-per DS1**			OH1 OH1MS	TDW1P	0.00										
**** This rate element is recovered on a per MOU basis and is included in the End Office Switching and Tandem Switching, per MOU rate elements**																
COMMON TRANSPORT (Shared)																
	Common Transport - Per Mile, Per MOU			OHD		0.0000064bk										
	Common Transport - Facilities Termination Per MOU			OHD		0.0003871bk										
LOCAL INTERCONNECTION (DEDICATED TRANSPORT)																
INTEROFFICE CHANNEL - DEDICATED TRANSPORT																
	Interoffice Channel - Dedicated Transport - 2-Wire Voice Grade - Per Mile per month			OHL, OHM	1L5NF	0.0174										
	Interoffice Channel - Dedicated Transport- 2- Wire Voice Grade - Facility Termination per month			OHL, OHM	1L5NF	18.58	17.37		3.51							
	Interoffice Channel - Dedicated Transport - 56 kbps - per mile per month			OHL, OHM	1L5NK	0.0174										
	Interoffice Channel - Dedicated Transport - 56 kbps - Facility Termination per month			OHL, OHM	1L5NK	17.98	17.37		3.51							
	Interoffice Channel - Dedicated Transport - 64 kbps - per mile per month			OHL, OHM	1L5NK	0.0174										
	Interoffice Channel - Dedicated Transport - 64 kbps - Facility Termination per month			OHL, OHM	1L5NK	17.98	17.37		3.51							
	Interoffice Channel - Dedicated Channel - DS1 - Per Mile per month			OH1, OH1MS	1L5NL	0.3562										
	Interoffice Channel - Dedicated Tranport - DS1 - Facility Termination per month			OH1, OH1MS	1L5NL	77.86	76.27		14.99							
	Interoffice Channel - Dedicated Transport - DS3 - Per Mile per month			OH3, OH3MS	1L5NM	2.34										
	Interoffice Channel - Dedicated Transport - DS3 - Facility Termination per month			OH3, OH3MS	1L5NM	848.99	176.56		105.91							
LOCAL CHANNEL - DEDICATED TRANSPORT																
	Local Channel - Dedicated - 2-Wire Voice Grade per month			OHL, OHM	TEFV2	19.43	199.33	24.16	54.81	4.80						
	Local Channel - Dedicated - 4-Wire Voice Grade per month			OHL, OHM	TEFV4	20.56	201.53	24.83	55.52	5.51						
	Local Channel - Dedicated - DS1 per month			OH1	TEFHG	40.99	277.35	233.26	33.18	22.30						
	Local Channel - Dedicated - DS3 Facility Termination per month			OH3	TEFHJ	611.30	595.37	304.50	215.82	151.15						
LOCAL INTERCONNECTION MID-SPAN MEET																
NOTE: If Access service ride Mid-Span Meet, one-half the tariffed service Local Channel rate is applicable.																
	Local Channel - Dedicated - DS1 per month			OH1MS	TEFHG	0.00	0.00									
	Local Channel - Dedicated - DS3 per month			OH3MS	TEFHJ	0.00	0.00									
MULTIPLEXERS																
	Channelization - DS1 to DS0 Channel System			OH1, OH1MS	SATN1	80.77	141.87	77.11	44.47	42.62						
	DS3 to DS1 Channel System per month			OH3, OH3MS	SATNS	222.98	308.03	108.47	6.34	4.23						
	DS3 Interface Unit (DS1 COCI) per month			OH1, OH1MS	SATCO	17.58	6.07	4.66								
Notes: If no rate is identified in the contract, the rates, terms, and conditions for the specific service or function will be as set forth in applicable BellSouth tariff.																

Attachment 4

Physical Collocation

BELLSOUTH

PHYSICAL COLLOCATION

1. Scope of Attachment

1.1 The rates, terms, and conditions contained within this Attachment shall only apply when Talk America is physically collocated as a sole occupant or as a Host within a Premises location pursuant to this Attachment. BellSouth Premises include BellSouth Central Offices and Serving Wire Centers (hereinafter "Premises"). This Attachment is applicable to Premises owned or leased by BellSouth. However, if the Premises occupied by BellSouth is leased by BellSouth from a third party, special considerations and intervals may apply in addition to the terms and conditions of this Attachment.

1.2 Right to Occupy. BellSouth shall offer to Talk America collocation on rates, terms, and conditions that are just, reasonable, non-discriminatory and consistent with the rules of the Federal Communications Commission ("FCC"). Subject to the rates, terms and conditions of this Attachment where space is available and it is technically feasible, BellSouth will allow Talk America to occupy that certain area designated by BellSouth within a BellSouth Premises, or on BellSouth property upon which the BellSouth Premises is located, of a size which is specified by Talk America and agreed to by BellSouth (hereinafter "Collocation Space"). The necessary rates, terms and conditions for BellSouth locations other than BellSouth Premises shall be negotiated upon request for collocation at such location(s).

1.2.1 Neither BellSouth nor any of BellSouth's affiliates may reserve space for future use on more preferential terms than those set forth below.

1.2.1.1 In all states other than Florida, the size specified by Talk America may contemplate a request for space sufficient to accommodate Talk America's growth within a two-year period.

1.2.1.2 In the state of Florida, the size specified by Talk America may contemplate a request for space sufficient to accommodate Talk America's growth within an eighteen (18) month period.

1.3 Space Allocation. BellSouth shall attempt to accommodate <customer_ name>'s requested preferences if any. In allocating Collocation Space, BellSouth shall not materially increase Talk America's cost or materially delay Talk America's occupation and use of the Collocation Space, shall not assign Collocation Space that will impair the quality of service or otherwise limit the service the Talk America wishes to offer, and shall not reduce unreasonably the total space available for physical collocation or preclude unreasonably physical collocation within the Premises. Space shall not be available for collocation if it is: (a) physically occupied by non-obsolete equipment; (b) assigned to another collocator; (c) used to provide physical access to occupied space;

(d) used to enable technicians to work on equipment located within occupied space; (e) properly reserved for future use, either by BellSouth or by another carrier; or (f) essential for the administration and proper functioning of BellSouth's Premises. BellSouth may segregate collocation space and require separate entrances in accordance with FCC rules.

1.4 Space Reclamation. In the event of space exhaust within a Central Office Premises, BellSouth may include in its documentation for the Petition for Waiver filing any unutilized space in the Central Office Premises. Talk America will be responsible for any justification of unutilized space within its space, if the appropriate state commission requires such justification.

1.5 Use of Space. Talk America shall use the Collocation Space for the purposes of installing, maintaining and operating Talk America's equipment (to include testing and monitoring equipment) necessary for interconnection with BellSouth services and facilities or for accessing BellSouth unbundled network elements for the provision of telecommunications services, as specifically set forth in this Attachment. The Collocation Space may be used for no other purposes except as specifically described herein or in any amendment hereto.

1.6 Rates and Charges. Talk America agrees to pay the rates and charges identified in Exhibit C attached hereto.

1.7 If any due date contained in this Attachment falls on a weekend or National holiday, then the due date will be the next business day thereafter. For intervals of ten (10) days or less National holidays will be excluded.

1.8 The parties agree to comply with all applicable federal, state, county, local and administrative laws, rules, ordinances, regulations and codes in the performance of their obligations hereunder.

2. Space Availability Report

2.1 Space Availability Report. Upon request from Talk America, BellSouth will provide a written report ("Space Availability Report") describing in detail the space that is available for collocation and specifying the amount of Collocation Space available at the Premises requested, the number of collocators present at the Premises, any modifications in the use of the space since the last report on the Premises requested and the measures BellSouth is taking to make additional space available for collocation arrangements. A Space Availability Report does not reserve space at the Premises.

2.1.1 The request from Talk America for a Space Availability Report must be written and must include the Premises street address, as identified in the Local Exchange Routing Guide ("LERG"), and Common Language Location Identification ("CLLI") code of the Premises. CLLI code information is located in the National Exchange Carriers Association ("NECA") Tariff FCC No. 4.

2.1.2 BellSouth will respond to a request for a Space Availability Report for a particular Premises within ten (10) calendar days of receipt of such request. BellSouth will make best efforts to respond in ten (10) calendar days to such a request when the request includes from two (2) to five (5) Premises within the same state. The response time for requests of more than five (5) Premises shall be negotiated between the Parties. If BellSouth cannot meet the ten (10) calendar day response time, BellSouth shall notify Talk America and inform Talk America of the time frame under which it can respond.

3. Collocation Options

3.1 Cageless. BellSouth shall allow Talk America to collocate Talk America's equipment and facilities without requiring the construction of a cage or similar structure. BellSouth shall allow Talk America to have direct access to Talk America's equipment and facilities. BellSouth shall make cageless collocation available in single bay increments. Except where Talk America's equipment requires special technical considerations (e.g., special cable racking, isolated ground plane, etc.), BellSouth shall assign cageless Collocation Space in conventional equipment rack lineups where feasible. For equipment requiring special technical considerations, Talk America must provide the equipment layout, including spatial dimensions for such equipment pursuant to generic requirements contained in Telcordia GR-63-Core, and shall be responsible for compliance with all special technical requirements associated with such equipment.

3.2 Caged. At Talk America's expense, Talk America may arrange with a Supplier certified by BellSouth ("Certified Supplier") to construct a collocation arrangement enclosure in accordance with BellSouth's guidelines and specifications prior to starting equipment installation. BellSouth will provide guidelines and specifications upon request. Where local building codes require enclosure specifications more stringent than BellSouth's standard enclosure specification, Talk America and Talk America's Certified Supplier must comply with the more stringent local building code requirements. Talk America's Certified Supplier shall be responsible for filing and receiving any and all necessary permits and/or licenses for such construction. BellSouth shall cooperate with Talk America and provide, at Talk America's expense, the documentation, including existing building architectural drawings, enclosure drawings, and specifications required and necessary for Talk America to obtain the zoning, permits and/or other licenses. Talk America's Certified Supplier shall bill Talk America directly for all work performed for Talk America pursuant to this Attachment and BellSouth shall have no liability for nor responsibility to pay such charges imposed by Talk America's Certified Supplier. Talk America must provide the local BellSouth building contact with two Access Keys used to enter the locked enclosure. Except in case of emergency, BellSouth will not access Talk America's locked enclosure prior to notifying Talk America. Upon request, BellSouth shall construct the enclosure for Talk America.

3.2.1 BellSouth may elect to review Talk America's plans and specifications prior to allowing construction to start to ensure compliance with BellSouth's guidelines and specifications. Notification to Talk America indicating BellSouth's desire to execute this review will be provided in BellSouth's response to the Initial Application, if Talk America has indicated its desire to construct its own enclosure. If Talk America's Initial Application does not indicate its desire to construct its own enclosure, but its subsequent firm order does indicate its desire to construct its own enclosure, then notification to review will be given within ten (10) calendar days after the Firm Order date. BellSouth shall complete its review within fifteen (15) calendar days after the receipt of the plans and specifications. Regardless of whether or not BellSouth elects to review Talk America's plans and specifications, BellSouth reserves the right to inspect the enclosure after construction to make sure it is constructed according to the submitted plans and specifications and/or BellSouth's guidelines and specifications, as applicable. BellSouth shall require Talk America to remove or correct within seven (7) calendar days at Talk America's expense any structure that does not meet these plans and specifications or, where applicable, BellSouth guidelines and specifications.

3.3 Shared Caged Collocation. Talk America may allow other telecommunications carriers to share Talk America's caged collocation arrangement pursuant to terms and conditions agreed to by Talk America ("Host") and other telecommunications carriers ("Guests") and pursuant to this Section, except where the BellSouth Premises is located within a leased space and BellSouth is prohibited by said lease from offering such an option. Talk America shall notify BellSouth in writing upon execution of any agreement between the Host and its Guest within ten (10) calendar days of its execution and prior to any Firm Order. Further, such notice shall include the name of the Guest(s) and the term of the agreement, and shall contain a certification by Talk America that said agreement imposes upon the Guest(s) the same terms and conditions for Collocation Space as set forth in this Attachment between BellSouth and Talk America.

3.3.1 Talk America, as the Host, shall be the sole interface and responsible Party to BellSouth for the assessment and billing of rates and charges contained within this Attachment and for the purposes of ensuring that the safety and security requirements of this Attachment are fully complied with by the Guest, its employees and agents. BellSouth shall provide Talk America with a proration of the costs of the collocation space based on the number of collocators and the space used by each with a minimum charge of one (1) bay/rack per Host/Guest. In all states other than Florida, and in addition to the foregoing, Talk America shall be the responsible party to BellSouth for the purpose of submitting applications for initial and additional equipment placement of Guest. In Florida the Guest may directly submit initial and additional equipment placement applications using the Host's access carrier name abbreviation (ACNA). A separate Guest application shall require the assessment of an Initial or Subsequent Application Fee, as set forth in Exhibit C, which will be charged to the Host.

3.3.2 Notwithstanding the foregoing, the Guest may arrange directly with BellSouth for the provision of the interconnecting facilities between BellSouth and the Guest and for the provision of the services and access to unbundled network elements. The bill for these interconnecting facilities, services and access to UNEs will be charged to the Guest pursuant to the applicable tariff or the Guest's Interconnection Agreement with BellSouth.

3.3.3 Talk America shall indemnify and hold harmless BellSouth from any and all claims, actions, causes of action, of whatever kind or nature arising out of the presence of Talk America's Guests in the Collocation Space except to the extent caused by BellSouth's sole negligence, gross negligence, or willful misconduct.

3.4 Adjacent Collocation. Subject to technical feasibility and space availability, BellSouth will permit adjacent collocation arrangements ("Adjacent Arrangement") on the Premises' property, where the Adjacent Arrangement does not interfere with access to existing or planned structures or facilities on the Premises property. The Adjacent Arrangement shall be constructed or procured by Talk America and in conformance with BellSouth's design and construction specifications. Further, Talk America shall construct, procure, maintain and operate said Adjacent Arrangement(s) pursuant to all of the rates, terms and conditions set forth in this Attachment.

3.4.1 Should Talk America elect Adjacent Collocation, Talk America must arrange with a Certified Supplier to construct an Adjacent Arrangement structure in accordance with BellSouth's guidelines and specifications. BellSouth will provide guidelines and specifications upon request. Where local building codes require enclosure specifications more stringent than BellSouth's standard specification, Talk America and Talk America's Certified Supplier must comply with the more stringent local building code requirements. Talk America's Certified Supplier shall be responsible for filing and receiving any and all necessary zoning, permits and/or licenses for such construction. Talk America's Certified Supplier shall bill Talk America directly for all work performed for Talk America pursuant to this Attachment and BellSouth shall have no liability for nor responsibility to pay such charges imposed by Talk America's Certified Supplier. Talk America must provide the local BellSouth building contact with two cards, keys or other access device used to enter the locked enclosure. Except in cases of emergency, BellSouth shall not access Talk America's locked enclosure prior to notifying Talk America.

3.4.2 Talk America must submit its plans and specifications to BellSouth with its Firm Order. BellSouth shall review Talk America's plans and specifications prior to construction of an Adjacent Arrangement(s) to ensure compliance with BellSouth's guidelines and specifications. BellSouth shall complete its review within fifteen (15) calendar days after receipt of plans and specifications. BellSouth may inspect the Adjacent Arrangement during and after construction to confirm it is constructed according to the submitted plans and specifications. BellSouth shall require Talk America to remove or correct within seven (7) calendar days at Talk America's

expense any structure that does not meet these plans and specifications or, where applicable, BellSouth's guidelines and specifications.

3.4.3 Talk America shall provide a concrete pad, the structure housing the arrangement, heating/ventilation/air conditioning ("HVAC"), lighting, and all facilities that connect the structure (i.e. racking, conduits, etc.) to the BellSouth point of demarcation. At Talk America's option, and where the local authority having jurisdiction permits, BellSouth shall provide an AC power source and access to physical collocation services and facilities subject to the same nondiscriminatory requirements as applicable to any other physical collocation arrangement. In Louisiana, BellSouth will provide DC power to Adjacent Collocation sites where technically feasible, as that term has been defined by the FCC. Talk America's Certified Supplier shall be responsible, at Talk America's expense, for filing and receiving any and all necessary zoning, permits and/or licenses for such arrangement. BellSouth shall allow Shared Caged Collocation within an Adjacent Arrangement pursuant to the terms and conditions set forth herein.

3.5 Co-Carrier Cross Connect (CCXC). The primary purpose of collocating CLEC equipment is to interconnect with BellSouth's network or access BellSouth's unbundled network elements for the provision of telecommunications services. BellSouth will permit Talk America to interconnect between its virtual or physical collocation arrangements and those of another collocated CLEC whose Agreement contains rates, terms and conditions for CCXC language. At no point in time shall Talk America use the Collocation Space for the sole or primary purpose of cross connecting to other CLECs.

3.5.1 The CCXC shall be provisioned through facilities owned by Talk America. Such connections to other carriers may be made using either optical or electrical facilities. Talk America may deploy such optical or electrical connections directly between its own facilities and the facilities of other CLEC(s) without being routed through BellSouth equipment. Talk America may not self provision CCXC on any BellSouth distribution frame, Pot Bay, DSX or LGX. Talk America is responsible for ensuring the integrity of the signal.

3.5.2 Talk America shall be responsible for providing written authorization to BellSouth from the other CLEC prior to installing the CCXC. Talk America must use a BellSouth Certified Supplier to place the CCXC. There will be a recurring charge per linear foot of common cable support structure used. Talk America-provisioned CCXC shall utilize common cable support structure. In the case of two contiguous caged collocation arrangements, Talk America may have the option of constructing its own dedicated support structure.

3.5.3 To order CCXCs Talk America must submit an Initial Application or Subsequent Application. If no modification to the Collocation Space is requested other than the placement of CCXCs, the Subsequent Application Fee for CCXC, as defined in

Exhibit C, will apply. If modifications in addition to the placement of CCXCs are requested, the Initial Application or Subsequent Application Fee will apply.

4. Occupancy

4.1 Occupancy. BellSouth will notify Talk America in writing that the Collocation Space is ready for occupancy ("Space Ready Date"). Talk America will schedule and complete an acceptance walkthrough of each Collocation Space with BellSouth within fifteen (15) calendar days of BellSouth's notifying Talk America that the collocation space is ready for occupancy. In the event that Talk America fails to complete an acceptance walkthrough within this fifteen (15) day interval, the Collocation Space shall be deemed accepted by Talk America and billing will commence on the sixteenth day after BellSouth releases the collocation space. Talk America must notify BellSouth in writing that collocation equipment installation is complete and is operational with BellSouth's network. BellSouth may, at its option, not accept orders for cross connects until receipt of such notice. For purposes of this paragraph, Talk America's telecommunications equipment will be deemed operational when cross connected to BellSouth's network for the purpose of service provisioning.

4.2 Termination of Occupancy. In addition to any other provisions addressing termination of occupancy in this Agreement, Talk America may terminate occupancy in a particular Collocation Space by submitting a Subsequent Application requesting termination of occupancy. A Subsequent Application Fee will not apply for termination of occupancy. BellSouth may terminate Talk America's right to occupy the Collocation Space in the event Talk America fails to comply with any provision of this Agreement.

4.2.1 Upon termination of occupancy, Talk America at its expense shall remove its equipment and other property from the Collocation Space. Talk America shall have thirty (30) calendar days from the termination date to complete such removal, including the removal of all equipment and facilities of Talk America's Guests, unless Talk America's Guest has assumed responsibility for the collocation space housing the Guest's equipment and executed the documentation required by BellSouth prior to such removal date. Talk America shall continue payment of monthly fees to BellSouth until such date as Talk America, and if applicable Talk America's Guest, has fully vacated the Collocation Space and the Space Relinquish Form has been accepted by BellSouth.. Should Talk America or Talk America's Guest fail to vacate the Collocation Space within thirty (30) calendar days from the termination date, BellSouth shall have the right to remove the equipment and other property of Talk America or Talk America's Guest at Talk America's expense and with no liability for damage or injury to Talk America's property or Talk America's Guest's property unless caused by the gross negligence or intentional misconduct of BellSouth. Upon termination of Talk America's right to occupy Collocation Space, Talk America shall surrender such Collocation Space to BellSouth in the same condition as when first occupied by Talk America except for ordinary wear and tear, unless otherwise agreed to by the Parties. Talk America's BellSouth Certified Supplier shall be responsible for

updating and making any necessary changes to BellSouth's records as required by BellSouth's guidelines and specifications including but not limited to Central Office Record Drawings and ERMA Records. Talk America shall be responsible for the cost of removing any enclosure, together with all support structures (e.g., racking, conduits, power cables, etc.), at the termination of occupancy and restoring the grounds to their original condition.

5. Use of Collocation Space

5.1 Equipment Type. BellSouth permits the collocation of any type of equipment necessary for interconnection to BellSouth's network or for access to BellSouth's unbundled network elements in the provision of telecommunications services, as the term "necessary" is defined by FCC 47 C.F.R. Section 51.323 (b). The primary purpose and function of any equipment collocated in a Premises must be for interconnection to BellSouth's network or for access to BellSouth's unbundled network elements in the provision of telecommunications services.

5.1.1 Examples of equipment that would not be considered necessary include but are not limited to: Traditional circuit switching equipment, equipment used exclusively for call-related databases, computer servers used exclusively for providing information services, operations support system (OSS) equipment used to support CLEC network operations, equipment that generates customer orders, manages trouble tickets or inventory, or stores customer records in centralized databases, etc. BellSouth will determine upon receipt of an application if the requested equipment is necessary based on the criteria established by the FCC. Multifunctional equipment placed on BellSouth's Premises must not place any greater relative burden on BellSouth's property than comparable single-function equipment. BellSouth reserves the right to permit collocation of any equipment on a nondiscriminatory basis.

5.1.2 Such equipment must, at a minimum, meet the following Telcordia Network Equipment Building Systems (NEBS) General Equipment Requirements: Criteria Level 1 requirements as outlined in the Telcordia Special Report SR-3580, Issue 1; equipment design spatial requirements per GR-63-CORE, Section 2; thermal heat dissipation per GR-063-CORE, Section 4, Criteria 77-79; acoustic noise per GR-063-CORE, Section 4, Criterion 128, and National Electric Code standards. Except where otherwise required by a Commission, BellSouth shall comply with the applicable FCC rules relating to denial of collocation based on Talk America's failure to comply with this Section.

5.1.3 Talk America shall not request more DS0, DS1, DS3 and optical terminations for a collocation arrangement than the total port or termination capacity of the equipment physically installed in the arrangement. The total capacity of the equipment collocated in the arrangement will include equipment contained in the application in question as well as equipment already placed in the arrangement. If full network termination capacity of the equipment being installed is not requested in the application, additional

network terminations for the installed equipment will require the submission of another application. In the event that Talk America submits an application for terminations that exceed the total capacity of the collocated equipment, Talk America will be informed of the discrepancy and will be required to submit a revision to the application.

5.2 Talk America shall not use the Collocation Space for marketing purposes nor shall it place any identifying signs or markings outside the Collocation Space or on the grounds of the Premises.

5.3 Talk America shall place a plaque or other identification affixed to Talk America's equipment necessary to identify Talk America's equipment, including a list of emergency contacts with telephone numbers.

5.4 Entrance Facilities. Talk America may elect to place Talk America-owned or Talk America-leased fiber entrance facilities into the Collocation Space. BellSouth will designate the point of interconnection in close proximity to the Premises building housing the Collocation Space, such as an entrance manhole or a cable vault, which are physically accessible by both Parties. Talk America will provide and place fiber cable at the point of entrance of sufficient length to be pulled through conduit and into the splice location. Talk America will provide and install a sufficient length of fire retardant riser cable, to which the entrance cable will be spliced by BellSouth, which will extend from the splice location to Talk America's equipment in the Collocation Space. In the event Talk America utilizes a non-metallic, riser-type entrance facility, a splice will not be required. Talk America must contact BellSouth for instructions prior to placing the entrance facility cable in the manhole. Talk America is responsible for maintenance of the entrance facilities. At Talk America's option BellSouth will accommodate where technically feasible a microwave entrance facility pursuant to separately negotiated terms and conditions. In the case of adjacent collocation, unless BellSouth determines that limited space is available for the entrance facilities, copper facilities may be used between the adjacent collocation arrangement and the central office demarcation point.

5.4.1 Dual Entrance. BellSouth will provide at least two interconnection points at each Premises where there are at least two such interconnection points available and where capacity exists. Upon receipt of a request for physical collocation under this Attachment, BellSouth shall provide Talk America with information regarding BellSouth's capacity to accommodate dual entrance facilities. If conduit in the serving manhole(s) is available and is not reserved for another purpose for utilization within 12 months of the receipt of an application for collocation, BellSouth will make the requested conduit space available for installing a second entrance facility to Talk America's arrangement. The location of the serving manhole(s) will be determined at the sole discretion of BellSouth. Where dual entrance is not available due to lack of capacity, BellSouth will so state in the Application Response.

5.4.2 Shared Use. Talk America may utilize spare capacity on an existing interconnector entrance facility for the purpose of providing an entrance facility to Talk America's collocation arrangement within the same BellSouth Premises. BellSouth shall allow the splice, provided that the fiber is non-working fiber. Talk America must arrange with BellSouth for BellSouth to splice the Talk America provided riser cable to the spare capacity on the entrance facility. The rates set forth in Exhibit C will apply. If Talk America desires to allow another CLEC to use its entrance facilities, additional rates, terms and conditions will apply and shall be negotiated between the Parties.

5.5 Demarcation Point. BellSouth will designate the point(s) of demarcation between Talk America's equipment and/or network and BellSouth's network. Each Party will be responsible for maintenance and operation of all equipment/facilities on its side of the demarcation point. For 2-wire and 4-wire connections to BellSouth's network, the demarcation point shall be a common block on the BellSouth designated conventional distributing frame (CDF). Talk America shall be responsible for providing, and a supplier certified by BellSouth ("BellSouth Certified Supplier") shall be responsible for installing and properly labeling/stenciling the common block and necessary cabling pursuant to Section 7. For all other terminations BellSouth shall designate a demarcation point on a per arrangement basis. Talk America or its agent must perform all required maintenance to equipment/facilities on its side of the demarcation point, pursuant to Section 5.6, following, and may self-provision cross-connects that may be required within the Collocation Space to activate service requests.

5.5.1 In Tennessee, BellSouth will designate the point(s) of demarcation between Talk America's equipment and/or network and BellSouth's network. Each Party will be responsible for maintenance and operation of all equipment/facilities on its side of the demarcation point. For connections to BellSouth's network, the demarcation point shall be a Talk America provided Point of Termination Bay (POT Bay) in a common area within the Premises. Talk America shall be responsible for providing, and a supplier certified by BellSouth shall be responsible for installing and properly labeling/stenciling the POT Bay as well as installing the necessary cabling between Talk America's collocation space and the demarcation point. Talk America or its agent must perform all required maintenance to equipment/facilities on its side of the demarcation point, pursuant to Section 5.6, following, and may self-provision cross-connects that may be required within the Collocation Space to activate service requests. BellSouth will negotiate alternative rates, terms and conditions related to the demarcation point in Tennessee in the event that Talk America desires to avoid the use of an intermediary device as contemplated by the Tennessee Regulatory Authority.

5.6 Talk America's Equipment and Facilities. Talk America, or if required by this Attachment, Talk America's BellSouth Certified Supplier, is solely responsible for the design, engineering, installation, testing, provisioning, performance, monitoring, maintenance and repair of the equipment and facilities used by Talk America which must be performed in compliance with all applicable BellSouth policies and guidelines. Such equipment and facilities may include but are not limited to cable(s), equipment, and point of termination connections. Talk America and its selected BellSouth

Certified Supplier must follow and comply with all BellSouth requirements outlined in BellSouth's TR 73503, TR 73519, TR 73572, and TR 73564.

5.7 BellSouth's Access to Collocation Space. From time to time BellSouth may require access to the Collocation Space. BellSouth retains the right to access such space for the purpose of making BellSouth equipment and building modifications (e.g., running, altering or removing racking, ducts, electrical wiring, HVAC, and cables). BellSouth will give notice to Talk America at least 48 hours before access to the Collocation Space is required. Talk America may elect to be present whenever BellSouth performs work in the Collocation Space. The Parties agree that Talk America will not bear any of the expense associated with this work.

5.8 Access. Pursuant to Section 12, Talk America shall have access to the Collocation Space twenty-four (24) hours a day, seven (7) days a week. Talk America agrees to provide the name and social security number or date of birth or driver's license number of each employee, contractor, or agent of Talk America or Talk America's Guests provided with access keys or devices ("Access Keys") prior to the issuance of said Access Keys. Key acknowledgement forms must be signed by Talk America and returned to BellSouth Access Management within fifteen (15) calendar days of Talk America's receipt. Failure to return properly acknowledged forms will result in the holding of subsequent requests until acknowledgements are current. Access Keys shall not be duplicated under any circumstances. Talk America agrees to be responsible for all Access Keys and for the return of all said Access Keys in the possession of Talk America employees, contractors, Guests, or agents after termination of the employment relationship, contractual obligation with Talk America or upon the termination of this Attachment or the termination of occupancy of an individual collocation arrangement.

5.8.1 BellSouth will permit one accompanied site visit to Talk America's designated collocation arrangement location after receipt of the Bona Fide Firm Order without charge to Talk America. Talk America must submit to BellSouth the completed Access Control Request Form for all employees or agents requiring access to the BellSouth Premises a minimum of thirty (30) calendar days prior to the date Talk America desires access to the Collocation Space. In order to permit reasonable access during construction of the Collocation Space, Talk America may submit such a request at any time subsequent to BellSouth's receipt of the Bona Fide Firm Order. In the event Talk America desires access to the Collocation Space after submitting such a request but prior to access being approved, in addition to the first accompanied free visit, BellSouth shall permit Talk America to access the Collocation Space accompanied by a security escort at Talk America's expense. Talk America must request escorted access at least three (3) business days prior to the date such access is desired.

5.9 Lost or Stolen Access Keys. Talk America shall notify BellSouth in writing immediately in the case of lost or stolen Access Keys. Should it become necessary for BellSouth to re-key buildings or deactivate a card as a result of a lost Access Key(s) or

for failure to return an Access Key(s), Talk America shall pay for all reasonable costs associated with the re-keying or deactivating the card.

5.10 Interference or Impairment. Notwithstanding any other provisions of this Attachment, Talk America shall not use any product or service provided under this Agreement, any other service related thereto or used in combination therewith, or place or use any equipment or facilities in any manner that 1) significantly degrades, interferes with or impairs service provided by BellSouth or by any other entity or any person's use of its telecommunications service; 2) endangers or damages the equipment, facilities or other property of BellSouth or of any other entity or person; 3) compromises the privacy of any communications; or 4) creates an unreasonable risk of injury or death to any individual or to the public. If BellSouth reasonably determines that any equipment or facilities of Talk America violates the provisions of this paragraph, BellSouth shall give written notice to Talk America, which notice shall direct Talk America to cure the violation within forty-eight (48) hours of Talk America's actual receipt of written notice or, at a minimum, to commence curative measures within twenty-four (24) hours and to exercise reasonable diligence to complete such measures as soon as possible thereafter. After receipt of the notice, the Parties agree to consult immediately and, if necessary, to inspect the arrangement.

5.10.1 Except in the case of the deployment of an advanced service which significantly degrades the performance of other advanced services or traditional voice band services, if Talk America fails to take curative action within forty-eight (48) hours or if the violation is of a character which poses an immediate and substantial threat of damage to property, injury or death to any person, or any other significant degradation, interference or impairment of BellSouth's or another entity's service, then and only in that event BellSouth may take such action as it deems appropriate to correct the violation, including without limitation the interruption of electrical power to Talk America's equipment. BellSouth will endeavor, but is not required, to provide notice to Talk America prior to taking such action and shall have no liability to Talk America for any damages arising from such action, except to the extent that such action by BellSouth constitutes willful misconduct.

5.10.2 For purposes of this Section, the term significantly degrade shall mean an action that noticeably impairs a service from a user's perspective. In the case of the deployment of an advanced service which significantly degrades the performance of other advanced services or traditional voice band services and Talk America fails to take curative action within forty-eight (48) hours then BellSouth will establish before the relevant Commission that the technology deployment is causing the significant degradation. Any claims of network harm presented to Talk America or, if subsequently necessary, the relevant Commission, must be supported with specific and verifiable information. Where BellSouth demonstrates that a deployed technology is significantly degrading the performance of other advanced services or traditional voice band services, Talk America shall discontinue deployment of that technology and migrate its customers to technologies that will not significantly degrade the performance of other such services. Where the only degraded service itself is a known

disturber, and the newly deployed technology satisfies at least one of the criteria for a presumption that is acceptable for deployment under Section 47 C.F.R. 51.230, the degraded service shall not prevail against the newly deployed technology.

5.11 Personalty and its Removal. Facilities and equipment placed by Talk America in the Collocation Space shall not become a part of the Collocation Space, even if nailed, screwed or otherwise fastened to the Collocation Space, but shall retain their status as personal property and may be removed by Talk America at any time. Any damage caused to the Collocation Space by Talk America's employees, agents or representatives during the removal of such property shall be promptly repaired by Talk America at its expense.

5.12 Alterations. In no case shall Talk America or any person acting on behalf of Talk America make any rearrangement, modification, improvement, addition, or other alteration which could affect in any way space, power, HVAC, and/or safety considerations to the Collocation Space or the BellSouth Premises without the written consent of BellSouth, which consent shall not be unreasonably withheld. The cost of any such specialized alterations shall be paid by Talk America. Any such material rearrangement, modification, improvement, addition, or other alteration shall require a Subsequent Application and Subsequent Application Fee.

5.13 Janitorial Service. Talk America shall be responsible for the general upkeep of the Collocation Space. Talk America shall arrange directly with a BellSouth Certified Supplier for janitorial services applicable to Caged Collocation Space. BellSouth shall provide a list of such suppliers on a site-specific basis upon request.

6. Ordering and Preparation of Collocation Space

6.1 Should any state or federal regulatory agency impose procedures or intervals applicable to Talk America and BellSouth that are different from procedures or intervals set forth in this Section, whether now in effect or that become effective after execution of this Agreement, those procedures or intervals shall supersede the requirements set forth herein for that jurisdiction for all applications submitted for the first time after the effective date thereof.

6.2 Initial Application. For Talk America or Talk America's Guest(s) initial equipment placement, Talk America shall submit to BellSouth a Physical Expanded Interconnection Application Document ("Initial Application"). The Initial Application is Bona Fide when it is complete and accurate, meaning that all required fields on the application are completed with the appropriate type of information. An application fee will apply.

6.3 Subsequent Application. In the event Talk America or Talk America's Guest(s) desires to modify the use of the Collocation Space after Bona Fide Firm Order, Talk America shall complete an application detailing all information regarding the

modification to the Collocation Space ("Subsequent Application"). The Subsequent Application is Bona Fide when it is complete and accurate, meaning that all required fields on the Subsequent Application are completed with the appropriate type of information. BellSouth shall determine what modifications, if any, to the Premises are required to accommodate the change requested by Talk America in the application. Such necessary modifications to the Premises may include, but are not limited to, floor loading changes, changes necessary to meet HVAC requirements, changes to power plant requirements, equipment additions, etc.

6.3.1 Subsequent Application Fee. The application fee paid by Talk America for its request to modify the use of the Collocation Space shall be dependent upon the level of assessment needed for the modification requested. The fee for a Subsequent Application where the modification requested has limited effect (e.g., requires labor expenditure but no capital expenditure by BellSouth) shall be the Subsequent Application Fee as set forth in Exhibit C. If the modification requires capital expenditure, an Initial Application Fee shall apply.

6.4 Space Preferences. If Talk America has previously requested and received a Space Availability Report for the Premises, Talk America may submit up to three (3) space preferences on its application identifying specific space identification numbers as referenced on the Space Availability Report. In the event that BellSouth can not accommodate the Talk America's preference(s), Talk America may elect to accept the space allocated by BellSouth or may cancel its application and submit another application requesting additional preferences, which will be treated as a new application and an application fee will apply.

6.5 Space Availability Notification.

6.5.1 Unless otherwise specified, BellSouth will respond to an application within ten (10) calendar days as to whether space is available or not available within a BellSouth Premises. BellSouth will also respond as to whether the application is Bona Fide and if it is not Bona Fide, the items necessary to cause the application to become Bona Fide. If the amount of space requested is not available, BellSouth will notify Talk America of the amount of space that is available and no application fee shall apply. When BellSouth's response includes an amount of space less than that requested by Talk America or differently configured, Talk America must resubmit its application to reflect the actual space available.

6.5.2 BellSouth will respond to a Florida application within fifteen (15) calendar days as to whether space is available or not available within a BellSouth Premises. BellSouth will also respond as to whether the application is Bona Fide and if it is not Bona Fide, the items necessary to cause the application to become Bona Fide. If a lesser amount of space than requested is available, BellSouth will provide an Application Response for the amount of space that is available and an application fee will be assessed. When BellSouth's Application Response includes an amount of space less than that requested by Talk America or differently configured, Talk America must amend its

application to reflect the actual space available prior to submitting Bona Fide Firm Order.

6.5.3 BellSouth will respond to a Louisiana application within ten (10) calendar days for space availability for one (1) to ten (10) applications; fifteen (15) calendar days for eleven (11) to twenty (20) applications; and for more than twenty (20) applications, it is increased by five (5) calendar days for every five additional applications received within five (5) business days. If the amount of space requested is not available, BellSouth will notify Talk America of the amount of space that is available and no application fee shall apply. When BellSouth's response includes an amount of space less than that requested by Talk America or differently configured, Talk America must resubmit its application to reflect the actual space available. BellSouth will also respond as to whether the application is Bona Fide and if it is not Bona Fide, the items necessary to cause the application to become Bona Fide.

6.6 Denial of Application. If BellSouth notifies Talk America that no space is available ("Denial of Application"), BellSouth will not assess an Application Fee. After notifying Talk America that BellSouth has no available space in the requested Premises, BellSouth will allow Talk America, upon request, to tour the entire Premises within ten (10) calendar days of such Denial of Application. In order to schedule said tour within ten (10) calendar days, the request for a tour of the Premises must be received by BellSouth within five (5) calendar days of the Denial of Application.

6.7 Filing of Petition for Waiver. Upon Denial of Application, BellSouth will timely file a petition with the Commission pursuant to 47 U.S.C. § 251(c)(6). BellSouth shall provide to the Commission any information requested by that Commission. Such information shall include which space, if any, BellSouth or any of BellSouth's affiliates have reserved for future use and a detailed description of the specific future uses for which the space has been reserved. Subject to an appropriate nondisclosure agreement or provision, BellSouth shall permit Talk America to inspect any floor plans or diagrams that BellSouth provides to the Commission.

6.8 Waiting List. On a first-come, first-served basis governed by the date of receipt of an application or Letter of Intent, BellSouth will maintain a waiting list of requesting carriers who have either received a Denial of Application or, where it is publicly known that the Premises is out of space, have submitted a Letter of Intent to collocate. BellSouth will notify the telecommunications carriers on the waiting list that can be accommodated by the amount of space that becomes available according to the position of the telecommunications carriers on said waiting list.

6.8.1 In Florida, on a first-come, first-served basis governed by the date of receipt of an application or Letter of Intent, BellSouth will maintain a waiting list of requesting carriers who have either received a Denial of Application or, where it is publicly known that the Premises is out of space, have submitted a Letter of Intent to collocate. Sixty (60) calendar days prior to space becoming available, if known, BellSouth will notify the Florida PSC and the telecommunications carriers on the waiting list by mail

when space becomes available according to the position of telecommunications carrier on said waiting list. If not known sixty (60) calendar days in advance, BellSouth shall notify the Florida PSC and the telecommunications carriers on the waiting list within two (2) business days of the determination that space is available. A CLEC that, upon denial of physical collocation, requests virtual collocation shall be automatically placed on the waiting list.

6.8.2 When space becomes available, Talk America must submit an updated, complete, and correct application to BellSouth within thirty (30) calendar days of such notification. If Talk America has originally requested caged collocation space and cageless collocation space becomes available, Talk America may refuse such space and notify BellSouth in writing within that time that Talk America wants to maintain its place on the waiting list without accepting such space. Talk America may accept an amount of space less than its original request by submitting an application as set forth above, and upon request, may maintain its position on the waiting list for the remaining space that was initially requested. If Talk America does not submit such an application or notify BellSouth in writing as described above, BellSouth will offer such space to the next CLEC on the waiting list and remove Talk America from the waiting list. Upon request, BellSouth will advise Talk America as to its position on the list.

6.9 Public Notification. BellSouth will maintain on its Interconnection Services website a notification document that will indicate all Central Offices that are without available space. BellSouth shall update such document within ten (10) calendar days of the date BellSouth becomes aware that there is insufficient space to accommodate physical collocation. BellSouth will also post a document on its Interconnection Services website that contains a general notice where space has become available in a Central Office previously on the space exhaust list.

6.10 Application Response.

6.10.1 In Alabama, Kentucky and North Carolina, when space has been determined to be available, BellSouth will provide a written response ("Application Response") within twenty-three (23) business days of the receipt of a Bona Fide application, which will include, at a minimum, the configuration of the space, the Cable Installation Fee, Cable Records Fee, and the space preparation fees, as described in Section 8.

6.10.2 In South Carolina, BellSouth will provide a written response ("Application Response") within thirty (30) calendar days of receipt of a Bona Fide application. The Application Response will include, at a minimum, the configuration of the space, the Cable Installation Fee, Cable Records Fee, and the space preparation fees, as described in Section 8. When multiple applications are submitted in a state within a fifteen (15) calendar day window, BellSouth will respond to the Bona Fide applications as soon as possible, but no later than the following: within thirty (30) calendar days for Bona Fide applications one (1) to five (5); within thirty-six (36) calendar days for Bona Fide applications six (6) to ten (10); within forty-two (42) calendar days for Bona Fide applications eleven (11) to fifteen (15). Response intervals for multiple Bona Fide

applications submitted within the same timeframe for the same state in excess of fifteen (15) must be negotiated. All negotiations shall consider the total volume from all requests from telecommunications companies for collocation.

6.10.3 In Tennessee, BellSouth will provide a written response ("Application Response") within fifteen (15) calendar days of receipt of a Bona Fide application. The Application Response will include, at a minimum, the configuration of the space, the Cable Installation Fee, Cable Records Fee, and a firm price quote for the space preparation fees, as described in Section 8 provided that Talk America has given BellSouth a forecast of Talk America's collocation needs at least ten (10) calendar days prior to submitting an application if the Talk America has standardized space preparation rates in their Agreement and twenty (20) calendar days prior to submitting an application if the Talk America has standardized space preparation rates in their Agreement.

6.10.4 In Florida, within fifteen (15) calendar days of receipt of a Bona Fide application, when space has been determined to be available or when a lesser amount of space than that requested is available, then with respect to the space available, BellSouth will provide a written response ("Application Response") including sufficient information to enable Talk America to place a Firm Order. The Application Response will include, at a minimum, the configuration of the space, the Cable Installation Fee, Cable Records Fee, and the space preparation fees, as described in Section 8. When Talk America submits ten (10) or more applications within ten (10) calendar days, the initial fifteen (15) day response period will increase by ten (10) calendar days for every additional ten (10) applications or fraction thereof.

6.10.5 In Georgia and Mississippi, when space has been determined to be available for caged or cageless arrangements, BellSouth will provide a written response ("Application Response") within twenty (20) calendar days of receipt of a Bona Fide application. The Application Response will include, at a minimum, the configuration of the space, the Cable Installation Fee, Cable Records Fee, and the space preparation fees, as described in Section 8.

6.10.6 In Louisiana, when space has been determined to be available, BellSouth will provide a written response ("Application Response") within thirty (30) calendar days for one (1) to ten (10) applications; thirty-five (35) calendar days for eleven (11) to twenty (20) applications; and for requests of more than twenty (20) applications it is increased by five (5) calendar days for every five (5) applications received within five (5) business days. The Application Response will include, at a minimum, the configuration of the space, the Cable Installation Fee, Cable Records Fee, and the space preparation fees, as described in Section 8.

6.11 <u>Application Modifications</u>.

6.11.1 If a modification or revision is made to any information in the Bona Fide application prior to Bona Fide Firm Order, with the exception of modifications to Customer Information, Contact Information or Billing Contact Information, either at the request of Talk America or necessitated by technical considerations, said application shall be considered a new application and shall be handled as a new application with respect to response and provisioning intervals and BellSouth may charge Talk America an additional application fee. The fee for an application modification where the modification requested has limited effect (e.g., requires labor expenditure but no capital expenditure by BellSouth) shall be the Subsequent Application Fee as set forth in Exhibit C. A modification involving a capital expenditure by BellSouth shall require Talk America to submit the application with an Initial Application Fee.

6.12 Bona Fide Firm Order.

6.12.1 In Alabama (Caged Only), Kentucky, and North Carolina, Talk America shall indicate its intent to proceed with equipment installation in a BellSouth Premises by submitting a Physical Expanded Interconnection Firm Order document ("Firm Order") to BellSouth. A Firm Order shall be considered Bona Fide when Talk America has completed the Application/Inquiry process described in Section 6, preceeding, and has submitted the Firm Order document indicating acceptance of the Application Response provided by BellSouth. The Bona Fide Firm Order must be received by BellSouth no later than five (5) business days after BellSouth's Application Response to Talk America's Bona Fide application in order to receive the intervals set forth in Section 7. The Bona Fide Firm Order must be received by BellSouth no later than thirty (30) calendar days after BellSouth's Application Response to Talk America's Bona Fide application or the application will expire. If the BFFO is received between the fifth business day and the thirtieth calendar day after the Application Response, then the intervals set forth in Section 7.1.1 will be extended day for day for each day after the fifth business day the Bona Fide Firm Order is received until the application expires.

6.12.2 Except as otherwise provided, in all States that have ordered provisioning intervals but not addressed Firm Order intervals, the following shall apply. Talk America shall indicate its intent to proceed with equipment installation in a BellSouth Premises by submitting a Firm Order to BellSouth. The Bona Fide Firm Order must be received by BellSouth no later than thirty (30) calendar days after BellSouth's Application Response to Talk America's Bona Fide application or the application will expire.

6.12.3 BellSouth will establish a firm order date based upon the date BellSouth is in receipt of a Bona Fide Firm Order. BellSouth will acknowledge the receipt of Talk America's Bona Fide Firm Order within seven (7) calendar days of receipt indicating that the Bona Fide Firm Order has been received. A BellSouth response to a Bona Fide Firm Order will include a Firm Order Confirmation containing the firm order date. No revisions will be made to a Bona Fide Firm Order.

7. Construction and Provisioning

7.1 Construction and Provisioning Intervals

7.1.1 In Alabama (Caged Only), Kentucky, and North Carolina, BellSouth will complete construction for collocation arrangements within seventy-six (76) business days from receipt of an application or as agreed to by the Parties. Under extraordinary conditions, BellSouth will complete construction for collocation arrangements within ninety-one (91) business days. Examples of extraordinary conditions include, but are not limited to, extended license or permitting intervals; major BellSouth equipment rearrangement or addition; power plant addition or upgrade; major mechanical addition or upgrade; major upgrade for ADA compliance; environmental hazard or hazardous materials abatement; and arrangements for which equipment shipping intervals are extraordinary in length. In the event Talk America submits a forecast as described in the following paragraph three (3) months or more prior to the application date, the above intervals shall apply. In the event Talk America submits such a forecast between two (2) months and three (3) months prior to the application date, the above intervals may be extended by one (1) additional month. In the event Talk America submits such a forecast less than two (2) months prior to the application date, the above intervals may be extended by sixty (60) calendar days. BellSouth will attempt to meet standard intervals for unforecasted requests and any interval adjustments will be discussed with Talk America at the time the application is received. Raw space, which is space lacking the necessary infrastructure to provide collocation space including but not limited to HVAC, Power, etc., conversion time frames fall outside the normal intervals and are negotiated on an individual case basis. Additionally, installations to existing collocation arrangements for line sharing or line splitting, which include adding cable, adding cable and splitter, and adding a splitter, will be forty five (45) business days from receipt of an application.

7.1.1.1 To be considered a timely and accurate forecast, Talk America must submit to BellSouth the CLEC Forecast Form, as set forth in Exhibit B attached hereto, containing the following information: Central Office/Serving Wire Center CLLI, number of Caged square feet and/or Cageless bays, number of DS0, DS1, DS3 frame terminations, number of fused amps and planned application date.

7.1.2 In Alabama (Cageless), BellSouth will complete construction for cageless collocation arrangements under ordinary conditions as soon as possible and within a maximum of sixty (60) calendar days from receipt of a Bona Fide Firm Order and ninety (90) calendar days for extraordinary conditions or as agreed to by the Parties. Ordinary conditions are defined as space available with only minor changes to support systems required, such as but not limited to, HVAC, cabling and the power plant(s). Extraordinary conditions are defined to include but are not limited to major BellSouth equipment rearrangement or addition; power plant addition or upgrade; major mechanical addition or upgrade; major upgrade for ADA compliance; environmental hazard or hazardous materials abatement; and arrangements for which equipment shipping intervals are extraordinary in length. The Parties may mutually agree to

renegotiate an alternative provisioning interval or BellSouth may seek a waiver from this interval from the Commission.

7.1.3 In Florida, BellSouth will complete construction for collocation arrangements as soon as possible and within a maximum of ninety (90) calendar days from receipt of a Bona Fide Firm Order or as agreed to by the Parties. For changes to collocation space after initial space completion ("Augmentation"), BellSouth will complete construction for collocation arrangements as soon as possible and within a maximum of forty-five (45) calendar days from receipt of a Bona Fide Firm Order or as agreed to by the Parties. If BellSouth does not believe that construction will be completed within the relevant time frame and BellSouth and Talk America cannot agree upon a completion date, within forty-five (45) calendar days of receipt of the Bona Fide Firm Order for an initial request, and within thirty (30) calendar days for Augmentations, BellSouth may seek an extension from the Florida Commission.

7.1.4 In Georgia, Mississippi and South Carolina, BellSouth will complete construction for caged collocation arrangements under ordinary conditions as soon as possible and within a maximum of ninety (90) calendar days from receipt of a Bona Fide Firm Order or as agreed to by the Parties. BellSouth will complete construction for cageless collocation arrangements under ordinary conditions as soon as possible and within a maximum of sixty (60) calendar days from receipt of a Bona Fide Firm Order and ninety (90) calendar days for extraordinary conditions or as agreed to by the Parties. Ordinary conditions are defined as space available with only minor changes to support systems required, such as but not limited to, HVAC, cabling and the power plant(s). Extraordinary conditions are defined to include but are not limited to major BellSouth equipment rearrangement or addition; power plant addition or upgrade; major mechanical addition or upgrade; major upgrade for ADA compliance; environmental hazard or hazardous materials abatement; and arrangements for which equipment shipping intervals are extraordinary in length. The Parties may mutually agree to renegotiate an alternative provisioning interval or BellSouth may seek a waiver from this interval from the Commission.

7.1.5 In Louisiana, BellSouth will complete construction for collocation arrangements under ordinary conditions as soon as possible and within a maximum of ninety (90) calendar days for caged and sixty (60) calendar days for cageless from receipt of a Bona Fide Firm Order for an initial request, and within sixty (60) calendar days for an Augmentation, or as agreed to by the Parties. Ordinary conditions are defined as space available with only minor changes to support systems required, such as but not limited to, HVAC, cabling and the power plant(s). BellSouth will complete construction of all other Collocation Space ("extraordinary conditions") within one hundred twenty (120) calendar days for caged and ninety (90) calendar days for cageless from the receipt of a Bona Fide Firm Order. Examples of extraordinary conditions include but are not limited to, extended license or permitting intervals; major BellSouth equipment rearrangement or addition; power plant addition or upgrade; major mechanical addition or upgrade; major upgrade for ADA compliance; environmental hazard or hazardous materials abatement; and arrangements for which

equipment shipping intervals are extraordinary in length. The Parties may mutually agree to renegotiate an alternative provisioning interval or BellSouth may seek a waiver from this interval from the Commission.

7.1.6 In Tennessee, BellSouth will complete construction for collocation arrangements under ordinary conditions as follows: (i) for caged collocation arrangements, within a maximum of ninety (90) calendar days from receipt of a Bona Fide Firm Order, or as agreed to by the Parties; (ii) for cageless collocation arrangements, within thirty (30) calendar days from receipt of a Bona Fide Firm Order when there is conditioned space and Talk America installs the bays/racks. In no event shall the provisioning interval for cageless collocation exceed ninety (90) calendar days from the receipt of a Bona Fide Firm Order, unless otherwise agreed to by the parties. Under extraordinary conditions, BellSouth may elect to renegotiate an alternative provisioning interval with Talk America or seek a waiver from this interval from the Commission. For the purpose of defining conditioned space as referenced in the Commission order setting intervals for cageless collocation in Tennessee, conditioned space is defined as follows: i) floor space must be available; ii) floor space must be equipped with adequate air conditioning to accommodate equipment listed on application; iii) Cable racking, any fiber duct, riser cable support structure and power cable support structure must be in place to support equipment listed on the application; and iv) power plant capacity at BDFB or main power board must be available. If LGX or DGX equipment is requested on the application and adequate existing capacity is not available then conditioned space is considered unavailable. If BellSouth is required by the application to place power cabling, conditioned space is considered unavailable.

7.2 Joint Planning. Joint planning between BellSouth and Talk America will commence within a maximum of twenty (20) calendar days from BellSouth's receipt of a Bona Fide Firm Order. BellSouth will provide the preliminary design of the Collocation Space and the equipment configuration requirements as reflected in the Bona Fide application and affirmed in the Bona Fide Firm Order. The Collocation Space completion time period will be provided to Talk America during joint planning.

7.3 Permits. Each Party or its agents will diligently pursue filing for the permits required for the scope of work to be performed by that Party or its agents within ten (10) calendar days of the completion of finalized construction designs and specifications.

7.4 Acceptance Walk Through. Talk America will schedule and complete an acceptance walkthrough of each Collocation Space with BellSouth within fifteen (15) calendar days of BellSouth’s notifying Talk Americathat the collocation space is ready for occupancy (“Space Ready Date”). In the event that Talk America fails to complete an acceptance walkthrough within this fifteen (15) day interval, the Collocation Space shall be deemed accepted by Talk America. BellSouth will correct any deviations to Talk America’s original or jointly amended requirements within seven (7) calendar days after the walkthrough, unless the Parties jointly agree upon a different time frame.

7.5 Circuit Facility Assignments (CFAs). Unless otherwise specified, BellSouth will make best efforts to provide CFAs to Talk America if Talk America informs BellSouth of the frame locations and the designation of Talk America's tie cables prior to Space Ready Date. If Talk America does not provide BellSouth the frame locations and the designation of Talk America's tie cables prior to the Space Ready Date, BellSouth will provide Talk Americathe CFAs after the Space Ready Date and the equipment to be installed in the Collocation Space has been verified by Talk America. Furthermore, BellSouth will bill Talk America a nonrecurring charge as set forth in Exhibit C each time Talk America requests a resend of CFAs.

7.6 Use of BellSouth Certified Supplier. Talk America shall select a supplier which has been approved as a BellSouth Certified Supplier to perform all engineering and installation work. Talk America and Talk America's BellSouth Certified Supplier must follow and comply with all BellSouth requirements outlined in BellSouth's TR 73503, TR 73519, TR 73572, and TR 73564. In some cases, Talk America must select separate BellSouth Certified Suppliers for transmission equipment, switching equipment and power equipment. BellSouth shall provide Talk America with a list of BellSouth Certified Suppliers upon request. The BellSouth Certified Supplier(s) shall be responsible for installing Talk America's equipment and components, extending power cabling to the BellSouth power distribution frame, performing operational tests after installation is complete, and notifying BellSouth's equipment engineers and Talk America upon successful completion of installation, etc. The BellSouth Certified Supplier shall bill Talk America directly for all work performed for Talk America pursuant to this Attachment, and BellSouth shall have no liability for nor responsibility to pay such charges imposed by the BellSouth Certified Supplier. BellSouth shall consider certifying Talk America or any supplier proposed by Talk America. All work performed by or for Talk America shall conform to generally accepted industry guidelines and standards.

7.7 Alarm and Monitoring. BellSouth shall place environmental alarms in the Premises for the protection of BellSouth equipment and facilities. Talk America shall be responsible for placement, monitoring and removal of environmental and equipment alarms used to service Talk America's Collocation Space. Upon request, BellSouth will provide Talk America with applicable tariffed service(s) to facilitate remote monitoring of collocated equipment by Talk America. Both Parties shall use best efforts to notify the other of any verified environmental condition known to that Party.

7.8 Virtual to Physical Collocation Relocation. In the event physical collocation space was previously denied at a location due to technical reasons or space limitations, and physical collocation space has subsequently become available, Talk America may relocate its virtual collocation arrangements to physical collocation arrangements and pay the appropriate fees for physical collocation and for the rearrangement or reconfiguration of services terminated in the virtual collocation arrangement, as outlined in the appropriate BellSouth tariffs. In the event that BellSouth knows when additional space for physical collocation may become available at the location requested by Talk America, such information will be provided to Talk America in

BellSouth's written denial of physical collocation. To the extent that (i) physical Collocation Space becomes available to Talk America within one hundred eighty (180) calendar days of BellSouth's written denial of Talk America's request for physical collocation, (ii) BellSouth had knowledge that the space was going to become available, and (iii) Talk America was not informed in the written denial that physical Collocation Space would become available within such one hundred eighty (180) calendar days, then Talk America may relocate its virtual collocation arrangement to a physical collocation arrangement and will receive a credit for any nonrecurring charges previously paid for such virtual collocation. Talk America must arrange with a BellSouth Certified Supplier for the relocation of equipment from its virtual Collocation Space to its physical Collocation Space and will bear the cost of such relocation.

7.9 Virtual to Physical Conversion (In Place). Virtual collocation arrangements may be converted to "in-place" physical arrangements if the potential conversion meets the following four criteria: 1) there is no change in the amount of equipment or the configuration of the equipment that was in the virtual collocation arrangement; 2) the conversion of the virtual collocation arrangement will not cause the equipment or the results of that conversion to be located in a space that BellSouth has reserved for its own future needs; 3) the converted arrangement does not limit BellSouth's ability to secure its own equipment and facilities due to the location of the virtual collocation arrangement; and 4) any changes to the arrangement can be accommodated by existing power, HVAC, and other requirements. The application fee for the conversion from virtual to in-place, physical collocation is as set forth in Exhibit C. Unless otherwise specified, BellSouth will complete virtual to in-place physical collocation conversions within sixty (60) calendar days.

7.9.1 In Florida, for Virtual to Physical conversions in place that require no physical changes, the only applicable charges shall cover the administrative billing and engineering records updates.

7.9.2 In Tennessee, BellSouth will complete Virtual to Physical conversions in place within thirty (30) calendar days.

7.10 Cancellation. If, at any time prior to space acceptance, Talk America cancels its order for the Collocation Space(s) ("Cancellation"), BellSouth will bill the applicable non-recurring rate for any and all work processes for which work has begun. In Georgia, if Talk America cancels its order for Collocation Space at any time prior to space acceptance, BellSouth will bill Talk America for all costs incurred prior to the date of Cancellation and for any costs incurred as a direct result of the Cancellation, not to exceed the total amount that would have been due had the order not been cancelled.

7.11 Licenses. Talk America, at its own expense, will be solely responsible for obtaining from governmental authorities, and any other appropriate agency, entity, or person, all rights, privileges, and licenses necessary or required to operate as a provider of telecommunications services to the public or to occupy the Collocation Space.

7.12 Environmental Compliance. The Parties agree to utilize and adhere to the Environmental Hazard Guidelines identified in Exhibit A attached hereto.

8. Rates and Charges

8.1 Application Fee. BellSouth shall assess an application fee via a service order, which shall be issued at the time BellSouth responds that space is available pursuant to Section 6. Payment of said application fee will be due as dictated by Talk America's current billing cycle and is non-refundable.

8.1.1 In Tennessee the applicable application fee is the planning fee for both Initial Applications and Subsequent Applications placed by Talk America.

8.2 Space Preparation

8.2.1 Recurring Charges. The recurring charges for space preparation begin on the date Talk America executes the written document accepting the collocation space pursuant to Section 4 or on the Space Ready Date, whichever is first. If Talk America fails to schedule and complete an acceptance walk through within fifteen (15) calendar days after BellSouth releases the space for occupancy, BellSouth shall begin billing Talk America for recurring charges as of the sixteenth day after the Space Ready Date.

8.2.2 Space preparation fees consist of a nonrecurring charge for firm order processing and monthly recurring charges for central office modifications, assessed per arrangement, per square foot, and common systems modifications, assessed per arrangement, per square foot, for cageless collocation and per cage for caged collocation. Talk America shall remit payment of the nonrecurring firm order-processing fee coincident with submission of a Bona Fide Firm Order. The charges recover the costs associated with preparing the Collocation Space, which includes survey, engineering of the Collocation Space, design and modification costs for network, building and support systems. In the event Talk America opts for cageless space, the space preparation fees will be assessed based on the total floor space dedicated to Talk America as prescribed in this Section.

8.2.3 In North Carolina, space preparation fees consist of monthly recurring charges for central office modifications, assessed per arrangement, per square foot; common systems modifications, assessed per arrangement, per square foot for cageless and per cage for caged collocation; and power, assessed per the nominal –48V DC ampere requirements specified by Talk America on the Bona Fide application. The charges recover the costs associated with preparing the Collocation Space, which includes survey, engineering of the Collocation Space, design and modification costs for network, building and support systems. In the event Talk America opts for cageless space, the space preparation fees will be assessed based on the total floor space dedicated to Talk America as described in this Section.

8.3 Cable Installation. Cable Installation Fee(s) are assessed per entrance cable placed.

8.4 Floor Space. The Floor Space Charge includes reasonable charges for lighting, HVAC, and other allocated expenses associated with maintenance of the Premises but does not include any power-related costs incurred by BellSouth. When the Collocation Space is enclosed, Talk America shall pay floor space charges based upon the number of square feet so enclosed. When the Collocation Space is not enclosed, Talk America shall pay floor space charges based upon the following floor space calculation: [(depth of the equipment lineup in which the rack is placed) + (0.5 x maintenance aisle depth) + (0.5 x wiring aisle depth)] X (width of rack and spacers). For purposes of this calculation, the depth of the equipment lineup shall consider the footprint of equipment racks plus any equipment overhang. BellSouth will assign unenclosed Collocation Space in conventional equipment rack lineups where feasible. In the event Talk America's collocated equipment requires special cable racking, isolated grounding or other treatment which prevents placement within conventional equipment rack lineups, Talk America shall be required to request an amount of floor space sufficient to accommodate the total equipment arrangement.

8.4.1 The recurring charges for floor space begin on the Space Ready Date or on the date Talk America first occupies the Collocation Space, whichever is first. If Talk America fails to schedule and complete an acceptance walk through within fifteen (15) calendar days after BellSouth releases the space for occupancy, BellSouth shall begin billing Talk America for recurring charges as of the sixteenth day after the Space Ready Date.

8.5 Power. BellSouth shall make available –48 Volt (-48V) DC power for Talk America's Collocation Space at a BellSouth Power Board or BellSouth Battery Distribution Fuse Bay (BDFB) at Talk America's option within the Premises.

8.5.1 Recurring charges for -48V DC power will be assessed per ampere per month based upon the BellSouth Certified Supplier engineered and installed power feed fused ampere capacity. Rates include redundant feeder fuse positions (A&B) and common cable rack to Talk America's equipment or space enclosure. Recurring power charges begin on the Space Ready Date or on the date Talk America first occupies the Collocation Space, whichever is sooner. When obtaining power from a BDFB, fuses and power cables (A&B) must be engineered (sized), and installed by Talk America's BellSouth Certified Supplier. When obtaining power from a BellSouth power board, power cables (A&B) must be engineered (sized), and installed by Talk America's BellSouth Certified Supplier. Talk America is responsible for contracting with a BellSouth Certified Supplier for power distribution feeder cable runs from a BellSouth BDFB or power board to Talk America's equipment. The determination of the BellSouth BDFB or BellSouth power board as the power source will be made at BellSouth's sole, but reasonable, discretion. The BellSouth Certified Supplier contracted by Talk America must provide BellSouth a copy of the engineering power specification prior to the day on which Talk America's equipment becomes operational. BellSouth will provide the common power feeder cable support structure between the BellSouth BDFB or power board and Talk America's arrangement area. Talk America shall contract with a BellSouth Certified Supplier who will be responsible for the following: dedicated power cable support structure within Talk

America's arrangement, power cable feeds, and terminations of cable. Any terminations at a BellSouth power board must be performed by a BellSouth Certified Supplier. Talk America shall comply with all applicable National Electric Code (NEC), BellSouth TR73503, Telcordia and ANSI Standards regarding power cabling.

8.5.2 If BellSouth has not previously invested in power plant capacity for collocation at a specific site, Talk America has the option to add its own dedicated power plant; provided, however, that such work shall be performed by a BellSouth Certified Supplier who shall comply with BellSouth's guidelines and specifications. Where the addition of Talk America's dedicated power plant results in construction of a new power plant room, upon termination of Talk America's right to occupy collocation space at such site, Talk America shall have the right to remove its equipment from the power plant room, but shall otherwise leave the room intact.

8.5.3 If Talk America elects to install its own DC Power Plant, BellSouth shall provide AC power to feed Talk America's DC Power Plant. Charges for AC power will be assessed per breaker ampere per month. Rates include the provision of commercial and standby AC power. When obtaining power from a BellSouth service panel, protection devices and power cables must be engineered (sized), and installed by Talk America's BellSouth Certified Supplier except that BellSouth shall engineer and install protection devices and power cables for Adjacent Collocation. Talk America's BellSouth Certified Supplier must also provide a copy of the engineering power specification prior to the equipment becoming operational. Charges for AC power shall be assessed pursuant to the rates specified in Exhibit C. AC power voltage and phase ratings shall be determined on a per location basis. At Talk America's option, Talk America may arrange for AC power in an Adjacent Collocation arrangement from a retail provider of electrical power.

8.5.4 In Tennessee, Recurring charges for -48V DC power consumption will be assessed per ampere per month based upon the engineered and installed power feed fused ampere capacity. Rates include redundant feeder fuse positions (A&B) and common cable rack to Talk America's equipment or space enclosure. Talk America shall contract with a Certified Supplier who will be responsible for the following: dedicated power cable support structure within Talk America's arrangement and terminations of cable within the collocation space.

8.5.4.1 In Tennessee, Non recurring charges for –48V DC power distribution will be based on the common power feeder cable support structure between the BellSouth BDFB and Talk America's arrangement area.

8.5.5 In Louisiana and South Carolina, Talk America has the option to purchase power directly from an electric utility company. Under such an option, Talk America is responsible for contracting with the electric utility company for its own power feed and meter, and is financially responsible for purchasing all equipment necessary to accomplish the arrangement, including inverters, batteries, power boards, bus bars, BDFBs, backup power supplies and cabling. The actual work to install this

arrangement must be performed by a BellSouth Certified Supplier hired by Talk America. Talk America's BellSouth Certified Supplier must comply with all applicable safety codes, including the National Electric Safety Codes, in installing this power arrangement. Any floor space, cable racking, etc utilized by Talk America in provisioning said power will be billed on an ICB basis.

8.5.6 If Talk America requests a reduction in the amount of power that BellSouth is currently providing Talk America must submit a Subsequent Application. If no modification to the Collocation Space is requested other than the reduction in power, the Subsequent Application Fee for Power Reduction as set forth in Exhibit C will apply. If modifications are requested in addition to the reduction of power the Subsequent Application Fee will apply.

8.6 Security Escort. A security escort will be required whenever Talk America or its approved agent desires access to the entrance manhole or must have access to the Premises after the one accompanied site visit allowed pursuant to Section 5 prior to completing BellSouth's Security Training requirements. Rates for a security escort are assessed according to the schedule appended hereto as Exhibit C beginning with the scheduled escort time. BellSouth will wait for one-half (1/2) hour after the scheduled time for such an escort and Talk America shall pay for such half-hour charges in the event Talk America fails to show up.

8.7 Cable Record charges. These charges apply for work required to build cable records in BellSouth systems. The VG/DS0 per cable record charge is for a maximum of 3600 records. The Fiber cable record charge is for a maximum of 99 records.

8.8 Other. If no rate is identified in the contract, the rate for the specific service or function will be negotiated by the Parties upon request by either Party.

9. Insurance

9.1 Talk America shall, at its sole cost and expense, procure, maintain, and keep in force insurance as specified in this Section and underwritten by insurance companies licensed to do business in the states applicable under this Attachment and having a Best's Insurance Rating of A-.

9.2 Talk America shall maintain the following specific coverage:

9.2.1 Commercial General Liability coverage in the amount of ten million dollars ($10,000,000.00) or a combination of Commercial General Liability and Excess/Umbrella coverage totaling not less than ten million dollars ($10,000,000.00). BellSouth shall be named as an Additional Insured on the Commercial General Liability policy as specified herein.

9.2.2 Statutory Workers Compensation coverage and Employers Liability coverage in the amount of one hundred thousand dollars ($100,000.00) each accident, one hundred

thousand dollars ($100,000.00) each employee by disease, and five hundred thousand dollars ($500,000.00) policy limit by disease.

9.2.3 All Risk Property coverage on a full replacement cost basis insuring all of Talk America's real and personal property situated on or within BellSouth's Central Office location(s).

9.2.4 Talk America may elect to purchase business interruption and contingent business interruption insurance, having been advised that BellSouth assumes no liability for loss of profit or revenues should an interruption of service occur.

9.3 The limits set forth in Section 9.2 above may be increased by BellSouth from time to time during the term of this Attachment upon thirty (30) calendar days notice to Talk America to at least such minimum limits as shall then be customary with respect to comparable occupancy of BellSouth structures.

9.4 All policies purchased by Talk America shall be deemed to be primary and not contributing to or in excess of any similar coverage purchased by BellSouth. All insurance must be in effect on or before the date equipment is delivered to BellSouth's Premises and shall remain in effect for the term of this Attachment or until all Talk America's property has been removed from BellSouth's Premises, whichever period is longer. If Talk America fails to maintain required coverage, BellSouth may pay the premiums thereon and seek reimbursement of same from Talk America.

9.5 Talk America shall submit certificates of insurance reflecting the coverage required pursuant to this Section a minimum of ten (10) business days prior to the commencement of any work in the Collocation Space. Failure to meet this interval may result in construction and equipment installation delays. Talk America shall arrange for BellSouth to receive thirty (30) business days' advance notice of cancellation from Talk America's insurance company. Talk America shall forward a certificate of insurance and notice of cancellation/non-renewal to BellSouth at the following address:

BellSouth Telecommunications, Inc.
Attn.: Risk Management Coordinator
17H53 BellSouth Center
675 W. Peachtree Street
Atlanta, Georgia 30375

9.6 Talk America must conform to recommendations made by BellSouth's fire insurance company to the extent BellSouth has agreed to, or shall hereafter agree to, such recommendations.

9.7 Self-Insurance. If Talk America's net worth exceeds five hundred million dollars ($500,000,000), Talk America may elect to request self-insurance status in lieu of obtaining any of the insurance required in Sections 9.2.1 and 9.2.2. Talk America shall provide audited financial statements to BellSouth thirty (30) calendar days prior to the

commencement of any work in the Collocation Space. BellSouth shall then review such audited financial statements and respond in writing to Talk America in the event that self-insurance status is not granted to Talk America. If BellSouth approves Talk America for self-insurance, Talk America shall annually furnish to BellSouth, and keep current, evidence of such net worth that is attested to by one of Talk America's corporate officers. The ability to self-insure shall continue so long as the Talk America meets all of the requirements of this Section. If the Talk America subsequently no longer satisfies this Section, Talk America is required to purchase insurance as indicated by Sections 9.2.1 and 9.2.2.

9.8 The net worth requirements set forth in Section 9.7 may be increased by BellSouth from time to time during the term of this Attachment upon thirty (30) calendar days' notice to Talk America to at least such minimum limits as shall then be customary with respect to comparable occupancy of BellSouth structures.

9.9 Failure to comply with the provisions of this Section will be deemed a material breach of this Attachment.

10. Mechanics Liens

10.1 If any mechanics lien or other liens shall be filed against property of either Party (BellSouth or Talk America), or any improvement thereon by reason of or arising out of any labor or materials furnished or alleged to have been furnished or to be furnished to or for the other Party or by reason of any changes, or additions to said property made at the request or under the direction of the other Party, the other Party directing or requesting those changes shall, within thirty (30) business days after receipt of written notice from the Party against whose property said lien has been filed, either pay such lien or cause the same to be bonded off the affected property in the manner provided by law. The Party causing said lien to be placed against the property of the other shall also defend, at its sole cost and expense, on behalf of the other, any action, suit or proceeding which may be brought for the enforcement of such liens and shall pay any damage and discharge any judgment entered thereon.

11. Inspections

11.1 BellSouth may conduct an inspection of Talk America's equipment and facilities in the Collocation Space(s) prior to the activation of facilities between Talk America's equipment and equipment of BellSouth. BellSouth may conduct an inspection if Talk America adds equipment and may otherwise conduct routine inspections at reasonable intervals mutually agreed upon by the Parties. BellSouth shall provide Talk America with a minimum of forty-eight (48) hours or two (2) business days, whichever is greater, advance notice of all such inspections. All costs of such inspection shall be borne by BellSouth.

12. Security and Safety Requirements

12.1 Unless otherwise specified, Talk America will be required, at its own expense, to conduct a statewide investigation of criminal history records for each Talk America employee hired in the past five years being considered for work on the BellSouth Premises, for the states/counties where the Talk America employee has worked and lived for the past five years. Where state law does not permit statewide collection or reporting, an investigation of the applicable counties is acceptable. Talk America shall not be required to perform this investigation if an affiliated company of Talk America has performed an investigation of the Talk America employee seeking access, if such investigation meets the criteria set forth above. This requirement will not apply if Talk America has performed a pre-employment statewide investigation of criminal history records of the Talk America employee for the states/counties where the Talk America employee has worked and lived for the past five years or, where state law does not permit a statewide investigation, an investigation of the applicable counties.

12.2 Talk America will be required to administer to its personnel assigned to the BellSouth Premises security training either provided by BellSouth, or meeting criteria defined by BellSouth.

12.3 Talk America shall provide its employees and agents with picture identification, which must be worn and visible at all times while in the Collocation Space or other areas in or around the Premises. The photo identification card shall bear, at a minimum, the employee's name and photo and Talk America's name. BellSouth reserves the right to remove from its premises any employee of Talk America not possessing identification issued by Talk America or who has violated any of BellSouth's policies as outlined in the CLEC Security Training documents. Talk America shall hold BellSouth harmless for any damages resulting from such removal of its personnel from BellSouth Premises. Talk America shall be solely responsible for ensuring that any Guest of Talk America is in compliance with all subsections of this Section.

12.4 Talk America shall not assign to the BellSouth Premises any personnel with records of felony criminal convictions. Talk America shall not assign to the BellSouth Premises any personnel with records of misdemeanor convictions, except for misdemeanor traffic violations, without advising BellSouth of the nature and gravity of the offense(s). BellSouth reserves the right to refuse building access to any Talk America personnel who have been identified to have misdemeanor criminal convictions. Notwithstanding the foregoing, in the event that Talk America chooses not to advise BellSouth of the nature and gravity of any misdemeanor conviction, Talk America may, in the alternative, certify to BellSouth that it shall not assign to the BellSouth Premises any personnel with records of misdemeanor convictions (other than misdemeanor traffic violations).

12.4.1 Talk America shall not knowingly assign to the BellSouth Premises any individual who was a former employee of BellSouth and whose employment with BellSouth was

terminated for a criminal offense whether or not BellSouth sought prosecution of the individual for the criminal offense.

12.4.2 Talk America shall not knowingly assign to the BellSouth Premises any individual who was a former supplier of BellSouth and whose access to a BellSouth Premises was revoked due to commission of a criminal offense whether or not BellSouth sought prosecution of the individual for the criminal offense.

12.5 For each Talk America employee or agent hired by Talk America within five years of being considered for work on the BellSouth Premises, who requires access to a BellSouth Premises pursuant to this Attachment, Talk America shall furnish BellSouth, prior to an employee or agent gaining such access, a certification that the aforementioned background check and security training were completed. The certification will contain a statement that no felony convictions were found and certifying that the security training was completed by the employee. If the employee's criminal history includes misdemeanor convictions, Talk America will disclose the nature of the convictions to BellSouth at that time. In the alternative, Talk America may certify to BellSouth that it shall not assign to the BellSouth Premises any personnel with records of misdemeanor convictions other than misdemeanor traffic violations.

12.5.1 For all other Talk Americaemployees requiring access to a BellSouth Premises pursuant to this Attachment, Talk America shall furnish BellSouth, prior to an employee gaining such access, a certification that the employee is not subject to the requirements of Section 12.5 above and that security training was completed by the employee.

12.6 At BellSouth's request, Talk America shall promptly remove from BellSouth's Premises any employee of Talk America BellSouth does not wish to grant access to its premises 1) pursuant to any investigation conducted by BellSouth or 2) prior to the initiation of an investigation if an employee of Talk America is found interfering with the property or personnel of BellSouth or another CLEC, provided that an investigation shall promptly be commenced by BellSouth.

12.7 Notification to BellSouth. BellSouth reserves the right to interview Talk America's employees, agents, or contractors in the event of wrongdoing in or around BellSouth's property or involving BellSouth's or another CLEC's property or personnel, provided that BellSouth shall provide reasonable notice to Talk America's Security contact of such interview. Talk America and its contractors shall reasonably cooperate with BellSouth's investigation into allegations of wrongdoing or criminal conduct committed by, witnessed by, or involving Talk America's employees, agents, or contractors. Additionally, BellSouth reserves the right to bill Talk America for all reasonable costs associated with investigations involving its employees, agents, or contractors if it is established and mutually agreed in good faith that Talk America's employees, agents, or contractors are responsible for the alleged act. BellSouth shall bill Talk America for BellSouth property, which is stolen or damaged where an

investigation determines the culpability of Talk America's employees, agents, or contractors and where Talk America agrees, in good faith, with the results of such investigation. Talk America shall notify BellSouth in writing immediately in the event that Talk America discovers one of its employees already working on the BellSouth premises is a possible security risk. Upon request of the other Party, the Party who is the employer shall discipline consistent with its employment practices, up to and including removal from BellSouth Premises, any employee found to have violated the security and safety requirements of this Section. Talk America shall hold BellSouth harmless for any damages resulting from such removal of its personnel from BellSouth premises.

12.8 Use of Supplies. Unauthorized use of equipment, supplies or other property by either Party, whether or not used routinely to provide telephone service will be strictly prohibited and handled appropriately. Costs associated with such unauthorized use may be charged to the offending Party, as may be all associated investigative costs.

12.9 Use of Official Lines. Except for non-toll calls necessary in the performance of their work, neither Party shall use the telephones of the other Party on the BellSouth Premises. Charges for unauthorized telephone calls may be charged to the offending Party, as may be all associated investigative costs.

12.10 Accountability. Full compliance with the Security requirements of this Section shall in no way limit the accountability of either Party to the other for the improper actions of its employees.

13. Destruction of Collocation Space

13.1 In the event a Collocation Space is wholly or partially damaged by fire, windstorm, tornado, flood or by similar causes to such an extent as to be rendered wholly unsuitable for Talk America's permitted use hereunder, then either Party may elect within ten (10) business days after such damage, to terminate occupancy of the damaged Collocation Space, and if either Party shall so elect, by giving the other written notice of termination, both Parties shall stand released of and from further liability under the terms hereof. If the Collocation Space shall suffer only minor damage and shall not be rendered wholly unsuitable for Talk America's permitted use, or is damaged and the option to terminate is not exercised by either Party, BellSouth covenants and agrees to proceed promptly without expense to Talk America, except for improvements not the property of BellSouth, to repair the damage. BellSouth shall have a reasonable time within which to rebuild or make any repairs, and such rebuilding and repairing shall be subject to delays caused by storms, shortages of labor and materials, government regulations, strikes, walkouts, and causes beyond the control of BellSouth, which causes shall not be construed as limiting factors, but as exemplary only. Talk America may, at its own expense, accelerate the rebuild of its collocated space and equipment provided however that a BellSouth Certified Supplier is used and the necessary space preparation has been completed. If Talk America's

acceleration of the project increases the cost of the project, then those additional charges will be incurred by Talk America. Where allowed and where practical, Talk America may erect a temporary facility while BellSouth rebuilds or makes repairs. In all cases where the Collocation Space shall be rebuilt or repaired, Talk America shall be entitled to an equitable abatement of rent and other charges, depending upon the unsuitability of the Collocation Space for Talk America's permitted use, until such Collocation Space is fully repaired and restored and Talk America's equipment installed therein (but in no event later than thirty (30) calendar days after the Collocation Space is fully repaired and restored). Where Talk America has placed an Adjacent Arrangement pursuant to Section 3, Talk America shall have the sole responsibility to repair or replace said Adjacent Arrangement provided herein. Pursuant to this Section, BellSouth will restore the associated services to the Adjacent Arrangement.

14. Eminent Domain

14.1 If the whole of a Collocation Space or Adjacent Arrangement shall be taken by any public authority under the power of eminent domain, then this Attachment shall terminate with respect to such Collocation Space or Adjacent Arrangement as of the day possession shall be taken by such public authority and rent and other charges for the Collocation Space or Adjacent Arrangement shall be paid up to that day with proportionate refund by BellSouth of such rent and charges as may have been paid in advance for a period subsequent to the date of the taking. If any part of the Collocation Space or Adjacent Arrangement shall be taken under eminent domain, BellSouth and Talk America shall each have the right to terminate this Attachment with respect to such Collocation Space or Adjacent Arrangement and declare the same null and void, by written notice of such intention to the other Party within ten (10) business days after such taking.

15. Nonexclusivity

15.1 Talk America understands that this Attachment is not exclusive and that BellSouth may enter into similar agreements with other Parties. Assignment of space pursuant to all such agreements shall be determined by space availability and made on a first come, first served basis

ENVIRONMENTAL AND SAFETY PRINCIPLES

The following principles provide basic guidance on environmental and safety issues when applying for and establishing Physical Collocation arrangements.

1. GENERAL PRINCIPLES

1.1 Compliance with Applicable Law. BellSouth and Talk America agree to comply with applicable federal, state, and local environmental and safety laws and regulations including U.S. Environmental Protection Agency (USEPA) regulations issued under the Clean Air Act (CAA), Clean Water Act (CWA), Resource Conservation and Recovery Act (RCRA), Comprehensive Environmental Response, Compensation and Liability Act (CERCLA), Superfund Amendments and Reauthorization Act (SARA), the Toxic Substances Control Act (TSCA), and OSHA regulations issued under the Occupational Safety and Health Act of 1970, as amended and NFPA and National Electrical Codes (NEC) and the NESC ("Applicable Laws"). Each Party shall notify the other if compliance inspections are conducted by regulatory agencies and/or citations are issued that relate to any aspect of this Attachment.

1.2 Notice. BellSouth and Talk America shall provide notice to the other, including Material Safety Data Sheets (MSDSs), of known and recognized physical hazards or Hazardous Chemicals existing on site or brought on site. Each Party is required to provide specific notice for known potential Imminent Danger conditions. Talk America should contact 1-800-743-6737 for BellSouth MSDS sheets.

1.3 Practices/Procedures. BellSouth may make available additional environmental control procedures for Talk America to follow when working at a BellSouth Premises (See Section 2, below). These practices/procedures will represent the regular work practices required to be followed by the employees and contractors of BellSouth for environmental protection. Talk America will require its contractors, agents and others accessing the BellSouth Premises to comply with these practices. Section 2 lists the Environmental categories where BST practices should be followed by Talk America when operating in the BellSouth Premises.

1.4 Environmental and Safety Inspections. BellSouth reserves the right to inspect the Talk America space with proper notification. BellSouth reserves the right to stop any Talk America work operation that imposes Imminent Danger to the environment, employees or other persons in the area or Facility.

1.5 Hazardous Materials Brought On Site. Any hazardous materials brought into, used, stored or abandoned at the BellSouth Premises by Talk America are owned by Talk America. Talk America will indemnify BellSouth for claims, lawsuits or damages to persons or property caused by these materials. Without prior written BellSouth

approval, no substantial new safety or environmental hazards can be created by Talk America or different hazardous materials used by Talk America at BellSouth Facility. Talk America must demonstrate adequate emergency response capabilities for its materials used or remaining at the BellSouth Facility.

1.6 Spills and Releases. When contamination is discovered at a BellSouth Premises, the Party discovering the condition must notify BellSouth. All Spills or Releases of regulated materials will immediately be reported by Talk America to BellSouth.

1.7 Coordinated Environmental Plans and Permits. BellSouth and Talk America will coordinate plans, permits or information required to be submitted to government agencies, such as emergency response plans, spill prevention control and countermeasures (SPCC) plans and community reporting. If fees are associated with filing, BellSouth and Talk America will develop a cost sharing procedure. If BellSouth's permit or EPA identification number must be used, Talk America must comply with all of BellSouth's permit conditions and environmental processes, including environmental "best management practices (BMP)" (see Section 2, below) and/or selection of BST disposition vendors and disposal sites.

1.8 Environmental and Safety Indemnification. BellSouth and Talk America shall indemnify, defend and hold harmless the other Party from and against any claims (including, without limitation, third-party claims for personal injury or death or real or personal property damage), judgments, damages, (including direct and indirect damages, and punitive damages), penalties, fines, forfeitures, costs, liabilities, interest and losses arising in connection with the violation or alleged violation of any Applicable Law or contractual obligation or the presence or alleged presence of contamination arising out of the acts or omissions of the indemnifying Party, its agents, contractors, or employees concerning its operations at the Facility.

2. CATEGORIES FOR CONSIDERATION OF ENVIRONMENTAL ISSUES

2.1 When performing functions that fall under the following Environmental categories on BellSouth's Premises, Talk America agrees to comply with the applicable sections of the current issue of BellSouth's Environmental and Safety Methods and Procedures (M&Ps), incorporated herein by this reference. Talk America further agrees to cooperate with BellSouth to ensure that Talk America's employees, agents, and/or subcontractors are knowledgeable of and satisfy those provisions of BellSouth's Environmental M&Ps which apply to the specific Environmental function being performed by Talk America, its employees, agents and/or subcontractors.

2.2 The most current version of reference documentation must be requested from BellSouth.

ENVIRONMENTAL CATEGORIES	ENVIRONMENTAL ISSUES	ADDRESSED BY THE FOLLOWING DOCUMENTATION
Disposal of hazardous material or other regulated material (e.g., batteries, fluorescent tubes, solvents & cleaning materials)	Compliance with all applicable local, state, & federal laws and regulations Pollution liability insurance EVET approval of contractor	Std T&C 450 Fact Sheet Series 17000 Std T&C 660-3 Approved Environmental Vendor List (Contact E/S Management)
Emergency response	Hazmat/waste release/spill fire safety emergency	Fact Sheet Series 1700 Building Emergency Operations Plan (EOP) (specific to and located on Premises)
Contract labor/outsourcing for services with environmental implications to be performed on BellSouth Premises (e.g., disposition of hazardous material/waste; maintenance of storage tanks)	Compliance with all applicable local, state, & federal laws and regulations Performance of services in accordance with BST's environmental M&Ps Insurance	Std T&C 450 Std T&C 450-B (Contact E/S for copy of appropriate E/S M&Ps.) Std T&C 660
Transportation of hazardous material	Compliance with all applicable local, state, & federal laws and regulations Pollution liability insurance EVET approval of contractor	Std T&C 450 Fact Sheet Series 17000 Std T&C 660-3 Approved Environmental Vendor List (Contact E/S Management)
Maintenance/operations work which may produce a waste Other maintenance work	Compliance with all application local, state, & federal laws and regulations Protection of BST employees and equipment	Std T&C 450 29CFR 1910.147 (OSHA Standard) 29CFR 1910 Subpart O (OSHA Standard)

Janitorial services	All waste removal and disposal must conform to all applicable federal, state and local regulations All Hazardous Material and Waste Asbestos notification and protection of employees and equipment	P&SM Manager - Procurement Fact Sheet Series 17000 GU-BTEN-001BT, Chapter 3 BSP 010-170-001BS (Hazcom)
Manhole cleaning	Compliance with all applicable local, state, & federal laws and regulations Pollution liability insurance EVET approval of contractor	Std T&C 450 Fact Sheet 14050 BSP 620-145-011PR Issue A, August 1996 Std T&C 660-3 Approved Environmental Vendor List (Contact E/S Management)
Removing or disturbing building materials that may contain asbestos	Asbestos work practices	GU-BTEN-001BT, Chapter 3 For questions regarding removing or disturbing materials that contain asbestos, call the BellSouth Building Service Center: AL, MS, TN, KY & LA (local area code) 557-6194 FL, GA, NC & SC (local area code) 780-2740

3. DEFINITIONS

Generator. Under RCRA, the person whose act produces a Hazardous Waste, as defined in 40 CFR 261, or whose act first causes a Hazardous Waste to become subject to regulation. The Generator is legally responsible for the proper management and disposal of Hazardous Wastes in accordance with regulations.

Hazardous Chemical. As defined in the U.S. Occupational Safety and Health (OSHA) hazard communication standard (29 CFR 1910.1200), any chemical which is a health hazard or physical hazard.

Hazardous Waste. As defined in Section 1004 of RCRA.

Imminent Danger. Any conditions or practices at a facility which are such that a danger exists which could reasonably be expected to cause immediate death or serious harm to people or immediate significant damage to the environment or natural resources.

Spill or Release. As defined in Section 101 of CERCLA.

4. ACRONYMS

E/S – Environmental/Safety

EVET - Environmental Vendor Evaluation Team

DEC/LDEC - Department Environmental Coordinator/Local Department Environmental Coordinator

GU-BTEN-001BT - BellSouth Environmental Methods and Procedures

NESC - National Electrical Safety Codes

P&SM - Property & Services Management

Std. T&C - Standard Terms & Conditions

THREE MONTH CLEC FORECAST

CLEC NAME _____ **DATE** _____

STATE	Central Office/City	CAGED Sq. Ft.	CAGELESS # Bays		FRAME TERMINATIONS	CLEC Provided BDFB--Amps Load	BST Provided BDFB---Amps Load	Heat Dissipation BTU/Hour	Entrance Facilities # sheaths & # fibers	Proposed Application Date	NOTES
			Standard Bays*	Non-Standard Bays**							

*Standard bays are defined as racks, bays or cabinets, including equipment and cable, with measurements equal to or less than the following: Width - 26", Depth - 12". The standard height for all collocated equipment bays in BellSouth is 7' 0".
** Any forecast for non-standard cageless bays must include an attachment describing the quantity and width and depth measurements.

Notes: Forecast information will be used for no other purpose than collocation planning.

Attachment 4

Remote Site Physical Collocation

BELLSOUTH

REMOTE SITE PHYSICAL COLLOCATION

1. Scope of Attachment

1.1 Scope of Attachment. The rates, terms, and conditions contained within this Attachment shall only apply when Talk America is occupying the Remote Collocation Space as a sole occupant or as a Host within a Remote Site Location pursuant to this Attachment.

1.2 Right to occupy. BellSouth shall offer to Talk America Remote Site Collocation on rates, terms, and conditions that are just, reasonable, non-discriminatory and consistent with the rules of the Federal Communications Commission ("FCC"). Subject to the rates, terms, and conditions of this Attachment where space is available and collocation is technically feasible, BellSouth will allow Talk America to occupy that certain area designated by BellSouth within a BellSouth Remote Site Location, or on BellSouth property upon which the BellSouth Remote Site Location is located, of a size, which is specified by Talk America and agreed to by BellSouth (hereinafter "Remote Collocation Space"). BellSouth Remote Site Locations include cabinets, huts, and controlled environmental vaults owned or leased by BellSouth that house BellSouth Network Facilities. To the extent this Attachment does not include all the necessary rates, terms and conditions for BellSouth remote locations other than cabinets, huts and controlled environmental vaults, the Parties will negotiate said rates, terms, and conditions upon request for collocation at BellSouth remote locations other than those specified above.

1.3 Space Reservation.

1.3.1 In all states other than Florida, the number of racks/bays specified by Talk America may contemplate a request for space sufficient to accommodate Talk America's growth within a two year period.

1.3.2 In the state of Florida, the number of racks/bays specified by Talk America may contemplate a request for space sufficient to accommodate Talk America's growth within an eighteen (18) month period.

1.3.3 Neither BellSouth nor any of BellSouth's affiliates may reserve space for future use on more preferential terms than those set forth above.

1.4 Third Party Property. If the Premises, or the property on which it is located, is leased by BellSouth from a Third Party or otherwise controlled by a Third Party, special

considerations and intervals may apply in addition to the terms and conditions of this Attachment. Additionally, where BellSouth notifies Talk America that BellSouth's agreement with a Third Party does not grant BellSouth the ability to provide access and use rights to others, upon Talk America's request, BellSouth will use its best efforts to obtain the owner's consent and to otherwise secure such rights for Talk America. Talk America agrees to reimburse BellSouth for the reasonable and demonstrable costs incurred by BellSouth in obtaining such rights for Talk America. In cases where a Third Party agreement does not grant BellSouth the right to provide access and use rights to others as contemplated by this Attachment and BellSouth, despite its best efforts, is unable to secure such access and use rights for Talk America as above, Talk America shall be responsible for obtaining such permission to access and use such property. BellSouth shall cooperate with Talk America in obtaining such permission.

1.5 Space Reclamation. In the event of space exhaust within a Remote Site Location, BellSouth may include in its documentation for the Petition for Waiver filing any unutilized space in the Remote Site Location. Talk America will be responsible for any justification of unutilized space within its Remote Collocation Space, if the appropriate state commission requires such justification.

1.6 Use of Space. Talk America shall use the Remote Collocation Space for the purposes of installing, maintaining and operating Talk America's equipment (to include testing and monitoring equipment) necessary for interconnection with BellSouth services and facilities or for accessing BellSouth unbundled network elements (UNEs) for the provision of telecommunications services, as specifically set forth in this Attachment. The Remote Collocation Space may be used for no other purposes except as specifically described herein or in any amendment hereto.

1.7 Rates and charges. Talk America agrees to pay the rates and charges identified in Exhibit C attached hereto.

1.8 If any due date contained in this Attachment falls on a weekend or National holiday, then the due date will be the next business day thereafter. For intervals of ten (10) days or less National holidays will be excluded.

1.9 The Parties agree to comply with all applicable federal, state, county, local and administrative laws, rules, ordinances, regulations and codes in the performance of their obligations hereunder.

2. Space Availability Report

2.1 Space Availability Report. Upon request from Talk America, BellSouth will provide a written report ("Space Availability Report"), describing in detail the space that is available for collocation and specifying the amount of Remote Collocation Space available at the Remote Site Location requested, the number of collocators present at

the Remote Site Location, any modifications in the use of the space since the last report on the Remote Site Location requested and the measures BellSouth is taking to make additional space available for collocation arrangements. A Space Availability Report does not reserve space at the Remote Site Location.

2.1.1 The request from Talk America for a Space Availability Report must be written and must include the Common Language Location Identification ("CLLI") code for both the Remote Site Location and the serving central office. The CLLI code information for the serving central office is located in the National Exchange Carriers Association (NECA) Tariff FCC No. 4. If Talk America is unable to obtain the CLLI code from, for example, a site visit to the remote site, Talk America may request the CLLI code from BellSouth. To obtain a CLLI code for a remote site directly from BellSouth, Talk America should submit to BellSouth a Remote Site Interconnection Request for Remote Site CLLI Code prior to submitting its request for a Space Availability Report. Talk America should complete all the requested information and submit the Request with the applicable fee to BellSouth.

2.1.2 BellSouth will respond to a request for a Space Availability Report for a particular Remote Site Location within ten (10) calendar days of receipt of such request. BellSouth will make best efforts to respond in ten (10) calendar days to such a request when the request includes from two (2) to five (5) Remote Site Locations within the same state. The response time for requests of more than five (5) Remote Site Locations shall be negotiated between the Parties. If BellSouth cannot meet the ten (10) calendar day response time, BellSouth shall notify Talk America and inform Talk America of the time frame under which it can respond.

2.2 Remote Terminal information. Upon request, BellSouth will provide Talk America with the following information concerning BellSouth's remote terminals: (i) the address of the remote terminal; (ii) the CLLI code of the remote terminal; (iii) the carrier serving area of the remote terminal; (iv) the designation of which remote terminals subtend a particular central office; and (v) the number and address of customers that are served by a particular remote terminal.

2.2.1 BellSouth will provide this information on a first come, first served basis within thirty (30) calendar days of a Talk America request subject to the following conditions: (i) the information will only be provided on a CD in the same format in which it appears in BellSouth's systems; (ii) the information will only be provided for each serving wire center designated by Talk America, up to a maximum of thirty (30) wire centers per Talk America request per month per state, and up to for a maximum of 120 wire centers total per month per state for all CLECs; and (iii) Talk America agrees to pay the costs incurred by BellSouth in providing the information.

3. Collocation Options

3.1 Cageless. BellSouth shall allow Talk America to collocate Talk America's equipment and facilities without requiring the construction of a cage or similar structure. BellSouth shall allow Talk America to have direct access to Talk America's equipment and facilities. BellSouth shall make cageless collocation available in single rack/bay increments. Except where Talk America's equipment requires special technical considerations (e.g., special cable racking, isolated ground plane, etc.), BellSouth shall assign cageless Collocation Space in conventional equipment rack lineups where feasible. For equipment requiring special technical considerations, Talk America must provide the equipment layout, including spatial dimensions for such equipment pursuant to generic requirements contained in Telcordia GR-63-Core, and shall be responsible for compliance with all special technical requirements associated with such equipment pursuant.

3.2 Caged. At Talk America's expense, Talk America may arrange with a Supplier certified by BellSouth ("Certified Supplier") to construct a collocation arrangement enclosure, where technically feasible as that term has been defined by the FCC, in accordance with BellSouth's guidelines and specifications prior to starting equipment installation. BellSouth will provide guidelines and specifications upon request. Talk America's Certified Supplier shall be responsible for filing and receiving any and all necessary permits and/or licenses for such construction. BellSouth shall cooperate with Talk America and provide, at Talk America's expense, the documentation, including existing building architectural drawings, enclosure drawings, and specifications required and necessary for Talk America to obtain the zoning, permits and/or other licenses. Talk America's Certified Supplier shall bill Talk America directly for all work performed for Talk America pursuant to this Attachment and BellSouth shall have no liability for nor responsibility to pay such charges imposed by Talk America's Certified Supplier. Talk America must provide the local BellSouth Remote Site Location contact with two Access Keys used to enter the locked enclosure. Except in case of emergency, BellSouth will not access Talk America's locked enclosure prior to notifying Talk America. Upon request, BellSouth shall construct the enclosure for Talk America.

3.2.1 BellSouth may elect to review Talk America's plans and specifications prior to allowing construction to start to ensure compliance with BellSouth's guidelines and specifications. Notification to Talk America indicating BellSouth's desire to execute this review will be provided in BellSouth's response to the Initial Application, if Talk America has indicated their desire to construct their own enclosure. If Talk America's Initial Application does not indicate their desire to construct their own enclosure, but their subsequent firm order does indicate their desire to construct their own enclosure, then notification to review will be given within ten (10) calendar days after the Firm Order date. BellSouth shall complete its review within fifteen (15) calendar days after the receipt of the plans and specifications. Regardless of whether or not BellSouth elects to review Talk America's plans and specifications, BellSouth reserves the right

to inspect the enclosure after construction to make sure it is constructed according to the submitted plans and specifications and/or BellSouth's guidelines and specifications, as applicable. BellSouth shall require Talk America to remove or correct within seven (7) calendar days at Talk America's expense any structure that does not meet these plans and specifications or, where applicable, BellSouth guidelines and specifications.

3.3 Shared Collocation. Talk America may allow other telecommunications carriers to share Talk America's Remote Collocation Space pursuant to terms and conditions agreed to by Talk America ("Host") and other telecommunications carriers ("Guests") and pursuant to this Section, except where the BellSouth Remote Site Location is located within a leased space and BellSouth is prohibited by said lease from offering such an option or is located on property for which BellSouth holds an easement and such easement does not permit such an option. Talk America shall notify BellSouth in writing upon execution of any agreement between the Host and its Guest within ten (10) calendar days of its execution and prior to any Firm Order. Further, such notice shall include the name of the Guest(s) and the term of the agreement, and shall contain a certification by Talk America that said agreement imposes upon the Guest(s) the same terms and conditions for Remote Collocation Space as set forth in this Attachment between BellSouth and Talk America.

3.3.1 Talk America, as the Host, shall be the sole interface and responsible Party to BellSouth for assessment of rates and charges contained within this Attachment and for the purposes of ensuring that the safety and security requirements of this Attachment are fully complied with by the Guest, its employees and agents. BellSouth shall provide Talk America with a proration of the costs of the collocation space based on the number of collocators and the space used by each with a minimum charge of one (1) bay/rack per Host/Guest. In those instances where the Host permits a Guest to use a shelf within the Host's bay, BellSouth will not prorate the cost of the bay. In all states other than Florida, and in addition to the foregoing, Talk America shall be the responsible party to BellSouth for the purpose of submitting applications for initial and additional equipment placement of Guest. In Florida the Guest may directly submit initial and additional equipment placement applications using the Host's access carrier name abbreviation (ACNA). A separate Guest application shall require the assessment of an Initial or Subsequent Application Fee, as set forth in Exhibit C, which will be charged to the Host.

3.3.2 Notwithstanding the foregoing, the Guest may arrange directly with BellSouth for the provision of the interconnecting facilities between BellSouth and the Guest and for the provision of the services and access to unbundled network elements. The bill for these interconnecting facilities, services and access to UNEs will be charged to the Guest pursuant to the applicable tariff or the Guest's Interconnection Agreement with BellSouth.

3.3.3 Talk America shall indemnify and hold harmless BellSouth from any and all claims, actions, causes of action, of whatever kind or nature arising out of the presence of

Talk America's Guests in the Remote Collocation Space except to the extent caused by BellSouth's sole negligence, gross negligence, or willful misconduct.

3.4 Adjacent Collocation. Subject to technical feasibility and space availability, BellSouth will permit adjacent Remote Site collocation arrangements ("Remote Site Adjacent Arrangement") on the property on which the Remote Site is located, where the Remote Site Adjacent Arrangement does not interfere with access to existing or planned structures or facilities on the Remote Site Location property. The Remote Site Adjacent Arrangement shall be constructed or procured by Talk America and in conformance with BellSouth's design and construction specifications. Further, Talk America shall construct, procure, maintain and operate said Remote Site Adjacent Arrangement(s) pursuant to all of the terms and conditions set forth in this Attachment. Rates shall be negotiated at the time of the application for the Remote Site Adjacent Arrangement.

3.4.1 Should Talk America elect Adjacent Collocation, Talk America must arrange with a Certified Supplier to construct a Remote Site Adjacent Arrangement structure in accordance with BellSouth's guidelines and specifications. Where local building codes require enclosure specifications more stringent than BellSouth's standard specification, Talk America and Talk America's Certified Supplier must comply with local building code requirements. Talk America's Certified Supplier shall be responsible for filing and receiving any and all necessary zoning, permits and/or licenses for such construction. Talk America's Certified Supplier shall bill Talk America directly for all work performed for Talk America pursuant to this Attachment and BellSouth shall have no liability for nor responsibility to pay such charges imposed by Talk America's Certified Supplier. Talk America must provide the local BellSouth Remote Site Location contact with two cards, keys or other access device used to enter the locked enclosure. Except in cases of emergency, BellSouth shall not access Talk America's locked enclosure prior to notifying Talk America.

3.4.2 Talk America must submit its plans and specifications to BellSouth with its Firm Order. BellSouth shall review Talk America's plans and specifications prior to construction of a Remote Site Adjacent Arrangement(s) to ensure compliance with BellSouth's guidelines and specifications. BellSouth shall complete its review within fifteen (15) calendar days after receipt of plans and specifications. BellSouth may inspect the Remote Site Adjacent Arrangement(s) during and after construction to confirm it is constructed according to the submitted plans and specifications. BellSouth shall require Talk America to remove or correct within seven (7) calendar days at Talk America's expense any structure that does not meet these plans and specifications.

3.4.3 Talk America shall provide a concrete pad, the structure housing the arrangement, heating/ventilation/air conditioning ("HVAC"), lighting, and all facilities that connect the structure (i.e. racking, conduits, etc.) to the BellSouth point of demarcation. At Talk America's option, and where the local authority having jurisdiction permits, BellSouth shall provide an AC power source and access to physical collocation

services and facilities subject to the same nondiscriminatory requirements as applicable to any other physical collocation arrangement. In Louisiana, BellSouth will provide DC power to Adjacent Collocation sites where technically feasible, as that term has been defined by the FCC. Talk America's Certified Supplier shall be responsible, at Talk America's expense, for filing and receiving any and all necessary zoning, permits and/or licenses for such arrangement. BellSouth shall allow Shared Collocation within a Remote Site Adjacent Arrangement pursuant to the terms and conditions set forth herein.

3.5 Co-carrier cross-connect (CCXC). The primary purpose of collocating CLEC equipment is to interconnect with BellSouth's network or access BellSouth's unbundled network elements for the provision of telecommunications services. BellSouth will permit Talk America to interconnect between its virtual or physical collocation arrangements and those of another collocated CLEC whose Agreement contains co-carrier cross-connect language. At no point in time shall Talk America use the Collocation Space for the sole or primary purpose of cross connecting to other CLECs.

3.5.1 The CCXC shall be provisioned through facilities owned by Talk America. Such connections to other carriers may be made using either optical or electrical facilities. Talk America may deploy such optical or electrical connections directly between its own facilities and the facilities of other CLEC(s) without being routed through BellSouth equipment. Talk America may not self-provision CCXC on any BellSouth distribution frame, Pot Bay, DSX or LGX. Talk America is responsible for ensuring the integrity of the signal.

3.5.2 Talk America shall be responsible for obtaining authorization from the other CLEC(s) involved. Talk America must use a BellSouth Certified Supplier to place the CCXC. There will be a recurring charge per linear foot of common cable support structure used. Talk America-provisioned CCXC shall utilize common cable support structure. In the case of two contiguous collocation arrangements, Talk America may have the option of constructing its own dedicated support structure.

3.5.3 To order CCXCs Talk America must submit an Initial Application or Subsequent Application. If no modification to the Collocation Space is requested other than the placement of CCXCs, the Subsequent Application Fee for CCXC, as defined in Exhibit C, will apply. If modifications in addition to the placement of CCXCs are requested, the Initial Application or Subsequent Application Fee will apply.

4. Occupancy

4.1 Occupancy. BellSouth will notify Talk America in writing that the Remote Collocation Space is ready for occupancy ("Space Ready Date"). Talk America will schedule and complete an acceptance walkthrough of each Remote Collocation Space with BellSouth within fifteen (15) calendar days of BellSouth's notifying Talk America that

Remote Collocation Space is ready for occupancy ("Space Ready Date"). In the event that Talk America fails to complete an acceptance walkthrough within this fifteen (15) calendar day interval, the Remote Collocation Space shall be deemed accepted by Talk America and billing will commence on the sixteenth day after BellSouth releases the Remote Collocation Space. Talk America must notify BellSouth in writing that collocation equipment installation is complete and is operational with BellSouth's network. BellSouth may, at its option, not accept orders for cross connects until receipt of such notice. For purposes of this paragraph, Talk America's telecommunications equipment will be deemed operational when cross-connected to BellSouth's network for the purpose of service provision.

4.2 Termination of Occupancy. In addition to any other provisions addressing termination of occupancy in this Attachment, Talk America may terminate occupancy in a particular Remote Collocation Space by submitting a Subsequent Application requesting termination of occupancy. A Subsequent Application Fee will not apply for termination of occupancy. BellSouth may terminate Talk America's right to occupy the Remote Collocation Space in the event Talk America fails to comply with any provision of this Agreement.

4.2.1 Upon termination of occupancy, Talk America at its expense shall remove its equipment and other property from the Remote Collocation Space. Talk America shall have thirty (30) calendar days from the termination date to complete such removal, including the removal of all equipment and facilities of Talk America's Guests, unless Talk America's Guest has assumed responsibility for the collocation space housing the Guest's equipment and executed the documentation required by BellSouth prior to such removal date. Talk America shall continue payment of monthly fees to BellSouth until such date as Talk America, and if applicable Talk America's Guest, has fully vacated the Remote Collocation Space and the Space Relinquish Form has been accepted by BellSouth. Should Talk America or Talk America's Guest fail to vacate the Remote Collocation Space within thirty (30) calendar days from the termination date, BellSouth shall have the right to remove the equipment and other property of Talk America or Talk America's Guest at Talk America's expense and with no liability for damage or injury to Talk America or Talk America's Guest's property unless caused by the gross negligence or intentional misconduct of BellSouth. Upon termination of Talk America's right to occupy Remote Collocation Space, Talk America shall surrender such Remote Collocation Space to BellSouth in the same condition as when first occupied by the Talk America except for ordinary wear and tear unless otherwise agreed to by the Parties. For CEVs and huts Talk America's BellSouth Certified Supplier shall be responsible for updating and making any necessary changes to BellSouth's records as required by BellSouth's guidelines and specifications including but not limited to Record Drawings and ERMA Records. Talk America shall be responsible for the cost of removing any enclosure, together with all support structures (e.g., racking, conduits, power cables, etc.), at the termination of occupancy and restoring the grounds to their original condition.

5. Use of Remote Collocation Space

5.1 Equipment Type. BellSouth permits the collocation of any type of equipment necessary for interconnection to BellSouth's network or for access to BellSouth's unbundled network elements in the provision of telecommunications services, as the term "necessary" is defined by FCC 47 C.F.R. Section 51.323 (b). The primary purpose and function of any equipment collocated in a Remote Collocated Space must be for interconnection to BellSouth's network or for access to BellSouth's unbundled network elements in the provision of telecommunications services.

5.1.1 Examples of equipment that would not be considered necessary include but are not limited to: Traditional circuit switching equipment, equipment used exclusively for call-related databases, computer servers used exclusively for providing information services, operations support system (OSS) equipment used to support CLEC network operations, equipment that generates customer orders, manages trouble tickets or inventory, or stores customer records in centralized databases, etc. BellSouth will determine upon receipt of an application if the requested equipment is necessary based on the criteria established by the FCC. Multifunctional equipment placed on BellSouth's Premises must not place any greater relative burden on BellSouth's property than comparable single-function equipment. BellSouth reserves the right to permit collocation of any equipment on a nondiscriminatory basis.

5.1.2 Such equipment must, at a minimum, meet the following Telcordia Network Equipment Building Systems (NEBS) General Equipment Requirements: Criteria Level 3 requirements as outlined in the Telcordia Special Report SR-3580, Issue 1 and equipment design spatial requirements per GR-63-CORE, Section 2, requirement numbers 3, 23, 25 and 34. Cageless collocation arrangements must additionally meet GR-63-CORE, Section 2, requirement numbers 1, 2, 5, 6, 15, 17, 19, 20, 21 and 26. Except where otherwise required by a Commission, BellSouth shall comply with the applicable FCC rules relating to denial of collocation based on Talk America's failure to comply with this Section.

5.1.2.1 All Talk America equipment installation shall comply with BellSouth TR 73503-11h, "Grounding - Engineering Procedures". Metallic cable sheaths and metallic strength members of optical fiber cables as well as the metallic cable sheaths of all copper conductor cables shall be bonded to the designated grounding bus for the Remote Site Location. All copper conductor pairs, working and non-working, shall be equipped with a solid state protector unit (over-voltage protection only) which has been listed by a nationally recognized testing laboratory.

5.2 Talk America shall not use the Remote Collocation Space for marketing purposes nor shall it place any identifying signs or markings in the area surrounding the Remote Collocation Space or on the grounds of the Remote Site Location.

5.3 Talk America shall place a plaque or other identification affixed to Talk America's equipment to identify Talk America's equipment, including a list of emergency contacts with telephone numbers.

5.4 Entrance Facilities. Talk America may elect to place Talk America-owned or Talk America-leased fiber entrance facilities into the Remote Collocation Space. BellSouth will designate the point of interconnection at the Remote Site Location housing the Remote Collocation Space, which is physically accessible by both Parties. Talk America will provide and place copper cable through conduit from the Remote Collocation Space to the Feeder Distribution Interface to the splice location of sufficient length for splicing by BellSouth. Talk America must contact BellSouth for instructions prior to placing the entrance facility cable. Talk America is responsible for maintenance of the entrance facilities.

5.4.1 Shared Use. Talk America may utilize spare capacity on an existing interconnector entrance facility for the purpose of providing an entrance facility to Talk America's collocation arrangement within the same BellSouth Remote Site Location. BellSouth shall allow splicing to the entrance facility, provided that the fiber is non-working fiber. The rates set forth in Exhibit C will apply. If Talk America desires to allow another CLEC to use its entrance facilities, additional rates, terms and conditions will apply and shall be negotiated between the Parties.

5.5 Demarcation Point. BellSouth will designate the point(s) of demarcation between Talk America's equipment and/or network and BellSouth's network. Each Party will be responsible for maintenance and operation of all equipment/facilities on its side of the demarcation point. Talk America or its agent must perform all required maintenance to Talk America equipment/facilities on its side of the demarcation point, pursuant to Section 5.6, following.

5.6 Talk America's Equipment and Facilities. Talk America, or if required by this Attachment, Talk America's Certified Supplier, is solely responsible for the design, engineering, installation, testing, provisioning, performance, monitoring, maintenance and repair of the equipment and facilities used by Talk America which must be performed in compliance with all applicable BellSouth policies and guidelines. Such equipment and facilities may include but are not limited to cable(s), equipment, and point of termination connections. Talk America and its selected Certified Supplier must follow and comply with all BellSouth requirements outlined in BellSouth's TR 73503, TR 73519, TR 73572, and TR 73564..

5.7 BellSouth's Access to Remote Collocation Space. From time to time BellSouth may require access to the Remote Collocation Space. BellSouth retains the right to access the Remote Collocation Space for the purpose of making BellSouth equipment and Remote Site Location modifications.

5.8 Access. Pursuant to Section 12, Talk America shall have access to the Remote Collocation Space twenty-four (24) hours a day, seven (7) days a week. Talk America agrees to provide the name and social security number or date of birth or driver's license number of each employee, contractor, or agents of Talk America or Talk America's Guests provided with access keys or devices ("Access Keys") prior to the issuance of said Access Keys. Key acknowledgement forms must be signed by Talk America and returned to BellSouth Access Management within fifteen (15) calendar days of Talk America's receipt. Failure to return properly acknowledged forms will result in the holding of subsequent requests until acknowledgements are current. Access Keys shall not be duplicated under any circumstances. Talk America agrees to be responsible for all Access Keys and for the return of all said Access Keys in the possession of Talk America employees, contractors, Guests, or agents after termination of the employment relationship, contractual obligation with Talk America or upon the termination of this Attachment or the termination of occupancy of an individual Remote Site collocation arrangement.

5.8.1 BellSouth will permit one accompanied site visit to Talk America's designated collocation arrangement location after receipt of the Bona Fide Firm Order without charge to Talk America. Talk America must submit to BellSouth the completed Access Control Request Form for all employees or agents requiring access to the BellSouth Remote Site Location a minimum of thirty (30) calendar days prior to the date Talk America desires access to the Remote Collocation Space. In order to permit reasonable access during construction of the Remote Collocation Space, Talk America may submit such a request at any time subsequent to BellSouth's receipt of the Bona Fide Firm Order. In the event Talk America desires access to the Remote Collocation Space after submitting such a request but prior to access being approved, in addition to the first accompanied free visit, BellSouth shall permit Talk America to access the Remote Collocation Space accompanied by a security escort at Talk America's expense. Talk America must request escorted access at least three (3) business days prior to the date such access is desired.

5.9 Lost or Stolen Access Keys. Talk America shall notify BellSouth in writing immediately in the case of lost or stolen Access Keys. Should it become necessary for BellSouth to re-key Remote Site Locations or deactivate a card as a result of a lost Access Key(s) or for failure to return an Access Key(s), Talk America shall pay for all reasonable costs associated with the re-keying or deactivating the card.

5.10 Interference or Impairment. Notwithstanding any other provisions of this Attachment, Talk America shall not use any product or service provided under this Agreement, any other service related thereto or used in combination therewith, or place or use any equipment and facilities in any manner that 1) significantly degrades, interferes with or impairs service provided by BellSouth or by any other other entity or any person's use of its telecommunications service; 2) endangers or damages the equipment, facilities or other property of BellSouth or of any other entity or person; 3) compromises the privacy of any communications; or 4)creates an unreasonable risk of injury or death to

any individual or to the public. If BellSouth reasonably determines that any equipment or facilities of Talk America violates the provisions of this paragraph, BellSouth shall give written notice to Talk America, which notice shall direct Talk America to cure the violation within forty-eight (48) hours of Talk America's actual receipt of written notice or, at a minimum, to commence curative measures within 24 hours and to exercise reasonable diligence to complete such measures as soon as possible thereafter. After receipt of the notice, the Parties agree to consult immediately and, if necessary, to inspect the arrangement.

5.10.1 Except in the case of the deployment of an advanced service which significantly degrades the performance of other advanced services or traditional voice band services, if Talk America fails to take curative action within 48 hours or if the violation is of a character which poses an immediate and substantial threat of damage to property, injury or death to any person, or any other significant degradation, interference or impairment of BellSouth's or any other entity's service, then and only in that event BellSouth may take such action as it deems appropriate to correct the violation, including without limitation the interruption of electrical power to Talk America's equipment. BellSouth will endeavor, but is not required, to provide notice to Talk America prior to taking such action and shall have no liability to Talk America for any damages arising from such action, except to the extent that such action by BellSouth constitutes willful misconduct.

5.10.2 For purposes of this section, the term significantly degrade shall mean an action that noticeably impairs a service from a user's perspective. In the case of the deployment of an advanced service which significantly degrades the performance of other advanced services or traditional voice band services and Talk America fails to take curative action within 48 hours then BellSouth will establish before the relevant Commission that the technology deployment is causing the significant degradation. Any claims of network harm presented to Talk America or, if subsequently necessary, the relevant Commission must be supported with specific and verifiable information. Where BellSouth demonstrates that a deployed technology is significantly degrading the performance of other advanced services or traditional voice band services, Talk America shall discontinue deployment of that technology and migrate its customers to technologies that will not significantly degrade the performance of other such services. Where the only degraded service itself is a known disturber, and the newly deployed technology satisfies at least one of the criteria for a presumption that is acceptable for deployment under Section 47 C.F.R. 51.230, the degraded service shall not prevail against the newly-deployed technology.

5.11 Personalty and its Removal. Facilities and equipment placed by Talk America in the Remote Collocation Space shall not become a part of the Remote Site Location, even if nailed, screwed or otherwise fastened to the Remote Collocation Space but shall retain their status as personalty and may be removed by Talk America at any time. Any damage caused to the Remote Collocation Space by Talk America's employees, agents or representatives shall be promptly repaired by Talk America at its expense.

5.12 Alterations. In no case shall Talk America or any person acting on behalf of Talk America make any rearrangement, modification, improvement, addition, or other alteration which could affect in any way space, power, HVAC, and/or safety considerations to the Remote Collocation Space or the BellSouth Remote Site Location without the written consent of BellSouth, which consent shall not be unreasonably withheld. The cost of any specialized alterations shall be paid by Talk America. Any such material rearrangement, modification, improvement, addition, or other alteration shall require an application and Application Fee.

5.13 Upkeep of Remote Collocation Space. Talk America shall be responsible for the general upkeep and cleaning of the Remote Collocation Space. Talk America shall be responsible for removing any Talk America debris from the Remote Collocation Space and from in and around the Remote Collocation Site on each visit.

6. Ordering and Preparation of Collocation Space

6.1 Should any state or federal regulatory agency impose procedures or intervals applicable to Talk America and BellSouth that are different from procedures or intervals set forth in this Section, whether now in effect or that become effective after execution of this Agreement, those procedures or intervals shall supersede the requirements set forth herein for that jurisdiction for all applications submitted for the first time after the effective date thereof

6.2 Initial Application. For Talk America or Talk America's Guest(s) initial equipment placement, Talk America shall submit to BellSouth a Physical Expanded Interconnection Application Document ("Initial Application"). The application is Bona Fide when it is complete and accurate, meaning that all required fields on the application are completed with the appropriate type of information. An application fee will apply.

6.3 Subsequent Application In the event Talk America or Talk America's Guest(s) desires to modify the use of the Remote Collocation Space after Bona Fide Firm Order, Talk America shall complete an application detailing all information regarding the modification to the Remote Collocation Space ("Subsequent Application"). BellSouth shall determine what modifications, if any, to the Remote Site Location are required to accommodate the change requested by Talk America in the application. Such necessary modifications to the Remote Site Location may include, but are not limited to floor loading changes, changes necessary to meet HVAC requirements, changes to power plant requirements, equipment additions, etc.

6.3.1 Application Fee for Subsequent Application. The application fee paid by Talk America for its request to modify the use of the Collocation Space shall be a full Application Fee as set forth in Exhibit C. The Subsequent Application is Bona Fide when it is

complete and accurate, meaning that all required fields on the application are completed with the appropriate type of information.

6.4 Availability of Space . Upon submission of an application, BellSouth will permit Talk America to physically collocate, pursuant to the terms of this Attachment, at any BellSouth Remote Site Location, unless BellSouth has determined that there is no space available due to space limitations or that Remote Site Collocation is not practical for technical reasons. In the event space is not immediately available at a Remote Site Location, BellSouth reserves the right to make additional space available, in which case the conditions in Section 7 shall apply, or BellSouth may elect to deny space in accordance with this Section in which case virtual or adjacent collocation options may be available. If the amount of space requested is not available, BellSouth will notify Talk America of the amount that is available.

6.5 Space Availability Notification.

6.5.1 Unless otherwise specified, BellSouth will respond to an application within ten (10) calendar days as to whether space is available or not available within a BellSouth Remote Site Location. BellSouth will also respond as to whether the application is Bona Fide and if it is not Bona Fide the items necessary to cause the application to become Bona Fide. If the amount of space requested is not available, BellSouth will notify Talk America of the amount of space that is available and no Application Fee shall apply. When BellSouth's response includes an amount of space less than that requested by Talk America or differently configured, Talk America must resubmit its application to reflect the actual space available.

6.5.2 BellSouth will respond to a Florida application within fifteen (15) calendar days as to whether space is available or not available within a BellSouth Remote Site Location. BellSouth will also respond as to whether the application is Bona Fide and if it is not Bona Fide the items necessary to cause the application to become Bona Fide. If a lesser amount of space than requested is available, BellSouth will provide an Application Response for the amount of space that is available and an Application Fee will be assessed. When BellSouth's Application Response includes an amount of space less than that requested by Talk America or differently configured, Talk America must amend its application to reflect the actual space available prior to submitting Bona Fide Firm Order.

6.5.3 BellSouth will respond to a Louisiana application within ten (10) calendar days for space availability for one (1) to ten (10) applications; fifteen (15) calendar days for eleven (11) to twenty (20) applications; and for more than twenty (20) applications, it is increased by five (5) calendar days for every five additional applications received within five (5) business days. If the amount of space requested is not available, BellSouth will notify Talk America of the amount of space that is available and no Application Fee will apply. When BellSouth's response includes an amount of space less than that requested by Talk America or differently configured, Talk America must resubmit its application to reflect the actual space available. BellSouth will also

respond as to whether the application is Bona Fide and if it is not Bona Fide the items necessary to cause the application to become Bona Fide.

6.5 Denial of Application. If BellSouth notifies Talk America that no space is available ("Denial of Application"), BellSouth will not assess an Application Fee. After notifying Talk America that BellSouth has no available space in the requested Remote Site Location, BellSouth will allow Talk America, upon request, to tour the Remote Site Location within ten (10) calendar days of such Denial of Application. In order to schedule said tour within ten (10) calendar days, the request for a tour of the Remote Site Location must be received by BellSouth within five (5) calendar days of the Denial of Application.

6.6 Filing of Petition for Waiver. Upon Denial of Application BellSouth will timely file a petition with the Commission pursuant to 47 U.S.C. § 251(c)(6). BellSouth shall provide to the Commission any information requested by that Commission. Such information shall include which space, if any, BellSouth or any of BellSouth's affiliates have reserved for future use and a detailed description of the specific future uses for which the space has been reserved. Subject to an appropriate nondisclosure agreement or provision, BellSouth shall permit Talk America to inspect any plans or diagrams that BellSouth provides to the Commission.

6.7 Waiting List. On a first-come, first-served basis governed by the date of receipt of an application or Letter of Intent, BellSouth will maintain a waiting list of requesting carriers who have either received a Denial of Application or, where it is publicly known that the Remote Site Location is out of space, have submitted a Letter of Intent to collocate. BellSouth will notify the telecommunications carriers on the waiting list that can be accommodated by the amount of space that becomes available according to the position of the telecommunications carriers on said waiting list.

6.8.1 In Florida, on a first-come, first-served basis governed by the date of receipt of an application or Letter of Intent, BellSouth will maintain a waiting list of requesting carriers who have either received a Denial of Application or, where it is publicly known that the Remote Site Location is out of space, have submitted a Letter of Intent to collocate. Sixty (60) calendar days prior to space becoming available, if known, BellSouth will notify the Florida PSC and the telecommunications carriers on the waiting list by mail when space becomes available according to the position of telecommunications carrier on said waiting list. If not known sixty (60) calendar days in advance, BellSouth shall notify the Florida PSC and the telecommunications carriers on the waiting list within two business days of the determination that space is available. A CLEC that, upon denial of physical collocation, requests virtual collocation shall be automatically placed on the waiting list.

6.8.2 When space becomes available, Talk America must submit an updated, complete, and correct application to BellSouth within thirty (30) calendar days of such notification. If Talk America has originally requested caged collocation space and cageless collocation space becomes available, Talk America may refuse such space and notify

BellSouth in writing within that time that Talk America wants to maintain its place on the waiting list without accepting such space. Talk America may accept an amount of space less than its original request by submitting an application as set forth above, and upon request, may maintain its position on the waiting list for the remaining space that was initially requested. If Talk America does not submit such an application or notify BellSouth in writing as described above, BellSouth will offer such space to the next CLEC on the waiting list and remove Talk America from the waiting list. Upon request, BellSouth will advise Talk America as to its position on the list.

6.9 Public Notification. BellSouth will maintain on its Interconnection Services website a notification document that will indicate all Remote Site Locations that are without available space. BellSouth shall update such document within ten (10) calendar days of the date that BellSouth becomes aware that there is insufficient space to accommodate Remote Site Collocation. BellSouth will also post a document on its Interconnection Services website that contains a general notice where space has become available in a Remote Site Location previously on the space exhaust list.

6.10 Application Response.

6.10.1 In Alabama, Kentucky and North Carolina, when space has been determined to be available, BellSouth will provide a written response ("Application Response") within twenty-three (23) business days of the receipt of a Bona Fide application, which will include, at a minimum, the configuration of the space, the Cable Installation Fee, Cable Records Fee, and the space preparation fees, as described in Section 8.

6.10.2 In South Carolina, BellSouth will provide a written response ("Application Response") within thirty (30) calendar days of receipt of a Bona Fide application. The Application Response will include, at a minimum, the configuration of the space, the Cable Installation Fee, Cable Records Fee, and the space preparation fees, as described in Section 8. When multiple applications are submitted in a state within a fifteen (15) calendar day window, BellSouth will respond to the Bona Fide applications as soon as possible, but no later than the following: within thirty (30) calendar days for Bona Fide applications one (1) –to five (5); within thirty-six (36) calendar days for Bona Fide applications six (6) –to ten (100; within forty-two (42) calendar days for Bona Fide applications eleven (11) –to fifteen (15). Response intervals for multiple Bona Fide applications submitted within the same timeframe for the same state in excess of fifteen (15) must be negotiated. All negotiations shall consider the total volume from all requests from telecommunications companies for collocation.

6.10.3 In Tennessee, BellSouth will provide a written response ("Application Response") within fifteen (15) calendar days of receipt of a Bona Fide application. The Application Response will include, at a minimum, the configuration of the space, the Cable Installation Fee, Cable Records Fee, and a firm price quote for the space preparation fees, as described in Section 8 provided that Talk America has given BellSouth a forecast of Talk America's collocation needs at least ten (10) calendar days prior to submitting an application if the Talk America has standardized space

preparation rates in their Agreement and twenty (20) calendar days prior to submitting an application if the Talk America has standardized space preparation rates in their Agreement.

6.10.3 In Florida, within fifteen (15) calendar days of receipt of a Bona Fide application, when space has been determined to be available or when a lesser amount of space than that requested is available, then with respect to the space available, BellSouth will provide a written response ("Application Response") including sufficient information to enable Talk America to place a Firm Order. The Application Response will include, at a minimum, the configuration of the space, the Cable Installation Fee, Cable Records Fee, and the space preparation fees, as described in Section 8. When Talk America submits ten (10) or more applications within ten (10) calendar days, the initial fifteen (15) day response period will increase by ten (10) calendar days for every additional ten (10) applications or fraction thereof.

6.10.4 In Georgia and Mississippi, when space has been determined to be available, BellSouth will provide a written response ("Application Response") within twenty (20) calendar days of receipt of a Bona Fide application. The Application Response will include, at a minimum, the configuration of the space, the Cable Installation Fee, Cable Records Fee, and the space preparation fees, as described in Section 8.

6.10.5 In Louisiana, when space has been determined to be available, BellSouth will respond with a written response (" Application Response") within thirty (30) calendar days for one (1) to ten (10) applications; thirty (35) calendar days for eleven (11) to twenty (20) applications; and for requests of more than twenty (20) applications, it is increased by five (5) calendar days for every five (5) applications received within five (5) business days. The Application Response will include, at a minimum, the configuration of the space, the Cable Installation Fee, Cable Records Fee, and the space preparation fees, as described in Section 8.

6.11 Application Modifications.

6.11.1 If a modification or revision is made to any information in the Bona Fide application prior to Bona Fide Firm Order, with the exception of modifications to Customer Information, Contact Information or Billing Contact Information, either at the request of Talk America or necessitated by technical considerations, said application shall be considered a new application and shall be handled as a new application with respect to response and provisioning intervals and BellSouth will charge Talk America a full application fee as set forth in Exhibit C.

6.12 Bona Fide Firm Order.

6.12.1 Bona Fide Firm Order. In Alabama, Kentucky and North Carolina, Talk America shall indicate its intent to proceed with equipment installation in a BellSouth Remote Site Location by submitting a Physical Expanded Interconnection Firm Order document ("Firm Order") to BellSouth. A Firm Order shall be considered Bona Fide when Talk

America has completed the Application/Inquiry process described in Section 6, preceding, and has submitted the Firm Order document indicating acceptance of the Application Response provided by BellSouth. The Bona Fide Firm Order must be received by BellSouth no later than five (5) business days after BellSouth's Application Response to Talk America's Bona Fide application. The Bona Fide Firm Order must be received by BellSouth no later than thirty (30) calendar days after BellSouth's Application Response to Talk America's Bona Fide application or the application will expire. If the BFFO is received between the fifth business day and the thirtieth calendar day after the Application Response, then the intervals set forth in 7.1.1 will be extended day for day for each day after the fifth business day the Bona Fide Firm Order is received until the application expires.

6.12.2 Except as otherwise provided, in all States that have ordered provisioning intervals but not addressed Firm Order intervals, the following shall apply. Talk America shall indicate its intent to proceed with equipment installation in a BellSouth Remote Site Location by submitting a Firm Order to BellSouth. The Bona Fide Firm Order must be received by BellSouth no later than thirty (30) calendar days after BellSouth's Application Response to Talk America's Bona Fide application or the application will expire.

6.12.3 BellSouth will establish a firm order date based upon the date BellSouth is in receipt of a Bona Fide Firm Order. BellSouth will acknowledge the receipt of Talk America's Bona Fide Firm Order within seven (7) calendar days of receipt indicating that the Bona Fide Firm Order has been received. A BellSouth response to a Bona Fide Firm Order will include a Firm Order Confirmation containing the firm order date. No revisions will be made to a Bona Fide Firm Order.

7. Construction and Provisioning

7.1 Construction and Provisioning Intervals.

7.1.1 In Alabama, Kentucky and North Carolina, BellSouth will complete construction for collocation arrangements within seventy-six (76) business days from receipt of an application or as agreed to by the Parties. Under extraordinary conditions, BellSouth will complete construction for collocation arrangements within ninety-one (91) business days. Examples of extraordinary conditions include, but are not limited to, extended license or permitting intervals; major BellSouth equipment rearrangement or addition; power plant addition or upgrade; major mechanical addition or upgrade; major upgrade for ADA compliance; environmental hazard or hazardous materials abatement; and arrangements for which equipment shipping intervals are extraordinary in length. In the event Talk America submits a forecast as described in the following paragraph three (3) months or more prior to the application date, the above intervals shall apply. In the event Talk America submits such a forecast between two (2) months and three (3) months prior to the application date, the above intervals may be extended by one (1) additional month. In the event Talk America submits such a forecast less than two (2) months prior to the application date, the above intervals may

be extended by sixty (60) calendar days. BellSouth will attempt to meet standard intervals for unforecasted requests and any interval adjustments will be discussed with Talk America at the time the application is received. Raw space, which is space lacking the necessary infrastructure to provide collocation space including but not limited to HVAC, Power, etc., conversion time frames fall outside the normal intervals and are negotiated on an individual case basis. Additionally, installations to existing collocation arrangements for line sharing or line splitting, which include adding cable, adding cable and splitter, and adding a splitter, will be forty five (45) business days from receipt of an application.

7.1.1.1 To be considered a timely and accurate forecast, Talk America must submit to BellSouth the CLEC Forecast Form, as set forth in Exhibit B attached hereto, containing the following information: Central Office/Serving Wire Center CLLI, Remote Site CLLI, number of Caged square feet and/or Cageless bays, number of DS0, DS1, DS3, STS-1, OC-3, OC-12, OC-48, and OC-192 frame terminations, number of fused amps and planned application date.

7.1.2 In Florida, BellSouth will complete construction for collocation arrangements as soon as possible and within a maximum of ninety (90) calendar days from receipt of a Bona Fide Firm Order or as agreed to by the Parties. For changes to collocation space after initial space completion ("Augmentation"), BellSouth will complete construction for collocation arrangements as soon as possible and within a maximum of forty-five (45) calendar days from receipt of a Bona Fide Firm Order or as agreed to by the Parties. If BellSouth does not believe that construction will be completed within the relevant time frame and BellSouth and Talk America cannot agree upon a completion date, within forty-five (45) calendar days of receipt of the Bona Fide Firm Order for an initial request, and within thirty (30) calendar days for Augmentations, BellSouth may seek an extension from the Florida Commission.

7.1.3 In Georgia, Mississippi and South Carolina, BellSouth will complete construction for collocation arrangements under ordinary conditions as soon as possible and within a maximum of ninety (90) calendar days from receipt of a Bona Fide Firm Order or as agreed to by the Parties. The Parties may mutually agree to renegotiate an alternative provisioning interval or BellSouth may seek a waiver from this interval from the Commission.

7.1.4 In Louisiana, BellSouth will complete construction for collocation arrangements under ordinary conditions as soon as possible and within a maximum of ninety (90) calendar days from receipt of a Bona Fide Firm Order for an initial request, and within 60 calendar days for an Augmentation, or as agreed to by the Parties. The Parties may mutually agree to renegotiate an alternative provisioning interval or BellSouth may seek a waiver from this interval from the Commission.

7.1.5 In Tennessee, BellSouth will complete construction for collocation arrangements under Ordinary Conditions within a maximum of 90 calendar days from receipt of a

Bona Fide Firm Order, or as agreed to by the Parties. Under extraordinary conditions, BellSouth may elect to renegotiate an alternative provisioning interval with Talk America or seek a waiver from this interval from the Commission.

7.2 In the event BellSouth does not have space immediately available at a Remote Site Location, BellSouth may elect to make additional space available by, for example but not limited to, rearranging BellSouth facilities or constructing additional capacity. In such cases, the above intervals shall not apply and BellSouth will provision the Remote Collocation Space in a nondiscriminatory manner and at parity with BellSouth and will provide Talk America with the estimated completion date in its Response.

7.3 Joint Planning. Joint planning between BellSouth and Talk America will commence within a maximum of twenty (20) calendar days from BellSouth's receipt of a Bona Fide Firm Order. BellSouth will provide the preliminary design of the Collocation Space and the equipment configuration requirements as reflected in the Bona Fide application and affirmed in the Bona Fide Firm Order. The Collocation Space completion time period will be provided to Talk America during joint planning.

7.4 Permits. Each Party or its agents will diligently pursue filing for the permits required for the scope of work to be performed by that Party or its agents within ten (10) calendar days of the completion of finalized construction designs and specifications.

7.5 Acceptance Walk Through. Talk America will schedule and complete an acceptance walkthrough of each Collocation Space with BellSouth within fifteen (15) calendar days of BellSouth's notifying Talk America that the collocation space is ready for occupancy ("Space Ready Date"). In the event that Talk America fails to complete an acceptance walkthrough within this fifteen (15) day interval, the Collocation Space shall be deemed accepted by Talk America. BellSouth will correct any deviations to Talk America's original or jointly amended requirements within seven (7) calendar days after the walkthrough, unless the Parties jointly agree upon a different time frame.

7.6 Use of BellSouth Certified Supplier. Talk America shall select a supplier which has been approved by BellSouth to perform all engineering and installation workTalk America and Talk America's BellSouth Certified Supplier must follow and comply with all BellSouth requirements outlined in BellSouth's TR 73503, TR 73519, TR 73572, and TR 73564. In some cases, Talk America must select separate BellSouth Certified Suppliers for transmission equipment, switching equipment and power equipment. BellSouth shall provide Talk America with a list of BellSouth Certified Suppliers upon request. The BellSouth Certified Supplier(s) shall be responsible for installing Talk America's equipment and components, extending power cabling to the BellSouth power distribution frame, performing operational tests after installation is complete, and notifying BellSouth's Outside Plant engineers and Talk America upon successful completion of installation. The BellSouth Certified Supplier shall bill Talk America directly for all work performed for Talk America pursuant to this Attachment, and BellSouth shall have no liability for nor responsibility to pay such

charges imposed by the BellSouth Certified Supplier. BellSouth shall consider certifying Talk America or any supplier proposed by Talk America. All work performed by or for Talk America shall conform to generally accepted industry guidelines and standards.

7.7 Alarm and Monitoring. BellSouth may place alarms in the Remote Site Location for the protection of BellSouth equipment and facilities. Talk America shall be responsible for placement, monitoring and removal of environmental and equipment alarms used to service Talk America's Remote Collocation Space. Upon request, BellSouth will provide Talk America with applicable tariffed service(s) to facilitate remote monitoring of collocated equipment by Talk America. Both Parties shall use best efforts to notify the other of any verified hazardous conditions known to that Party.

7.8 Virtual Remote Site Collocation Relocation. In the event physical Remote Collocation Space was previously denied at a Remote Site Location due to technical reasons or space limitations, and physical Remote Collocation Space has subsequently become available, Talk America may relocate its virtual Remote Site collocation arrangements to physical Remote Site collocation arrangements and pay the appropriate fees for physical Remote Site collocation and for the rearrangement or reconfiguration of services terminated in the virtual Remote Site collocation arrangement, as outlined in the appropriate BellSouth tariffs. In the event that BellSouth knows when additional space for physical Remote Site collocation may become available at the location requested by Talk America, such information will be provided to Talk America in BellSouth's written denial of physical Remote Site collocation. To the extent that (i) physical Remote Collocation Space becomes available to Talk America within one hundred eighty 180 calendar days of BellSouth's written denial of Talk America's request for physical collocation, (ii) BellSouth had knowledge that the space was going to become available, and (iii) Talk America was not informed in the written denial that physical Remote Collocation Space would become available within such one hundred eighty 180 calendar days, then Talk America may relocate its virtual Remote Site collocation arrangement to a physical Remote Site collocation arrangement and will receive a credit for any nonrecurring charges previously paid for such virtual Remote Site collocation. Talk America must arrange with a BellSouth Certified Supplier for the relocation of equipment from its virtual Remote Collocation Space to its physical Remote Collocation Space and will bear the cost of such relocation.

7.9 Virtual to Physical Conversion (In Place). Virtual collocation arrangements may be converted to "in-place" physical arrangements if the potential conversion meets the following four criteria: 1) there is no change in the amount of equipment or the configuration of the equipment that was in the virtual collocation arrangement; 2) the conversion of the virtual collocation arrangement will not cause the equipment or the results of that conversion to be located in a space that BellSouth has reserved for its own future needs; 3) the converted arrangement does not limit BellSouth's ability to

secure its own equipment and facilities due to the location of the virtual collocation arrangement; and 4) any changes to the arrangement can be accommodated by existing power, HVAC, and other requirements. The application fee for the conversion from virtual to in-place, physical collocation is as set forth in Exhibit C. Unless otherwise specified, BellSouth will complete virtual to in-place physical collocation conversions within sixty (60) calendar days.

7.9.1 In Florida, for Virtual to Physical conversions in place that require no physical changes, the only applicable charges shall cover the administrative billing and engineering records updates.

7.9.2 In Tennessee, BellSouth will complete Virtual to Physical conversions in place within thirty (30) calendar days.

7.10 Cancellation. If, at any time prior to space acceptance, Talk America cancels its order for the Remote Collocation Space(s) ("Cancellation"),BellSouth will bill the applicable non-recurring rate for any and all work processes for which work has begun. In Georgia, if Talk America cancels its order for Remote Collocation Space at any time prior to space acceptance, BellSouth will bill Talk America for all costs incurred prior to the date of Cancellation and for any costs incurred as a direct result of the Cancellation, not to exceed the total amount that would have been due had the order not been cancelled.

7.11 Licenses. Talk America, at its own expense, will be solely responsible for obtaining from governmental authorities, and any other appropriate agency, entity, or person, all rights, privileges, and licenses necessary or required to operate as a provider of telecommunications services to the public or to occupy the Remote Collocation Space.

7.12 Environmental Hazard Guidelines. The Parties agree to utilize and adhere to the Environmental Hazard Guidelines identified in Exhibit A attached hereto.

8. Rates and Charges

8.1 BellSouth shall assess an Application Fee via a service order, which shall be issued at the time BellSouth responds that space is available pursuant to Section 2. Payment of said Application Fee will be due as dictated by Talk America's current billing cycle and is non-refundable.

8.1.1 In Tennessee the applicable Application Fee is the Planning Fee for both Initial Applications and Subsequent Applications placed by Talk America.

8.2 Space Preparation

8.2.1 Recurring Charges. Recurring charges begin on the date that Talk America executes the written document accepting the Remote Collocation Space pursuant to Section 7, or on the Space Ready Date, whichever is first. If Talk America fails to schedule and

complete a walkthrough within fifteen (15) calendar days after BellSouth releases the space for occupancy, then BellSouth shall begin billing Talk America for recurring charges as of the sixteenth day after the Space Ready Date..

8.2.2 Rack/Bay Space. The rack/bay space charge includes reasonable charges for air conditioning, ventilation and other allocated expenses associated with maintenance of the Remote Site Location, and includes amperage necessary to power Talk America's equipment. Talk America shall pay rack/bay space charges based upon the number of racks/bays requested. BellSouth will assign Remote Collocation Space in conventional remote site rack/bay lineups where feasible.

8.2 Power. BellSouth shall make available –48 Volt (-48V) DC power for Talk America's Remote Collocation Space at a BellSouth Power Board or BellSouth Battery Distribution Fuse Bay (BDFB) at Talk America's option within the Remote Site Location. The charge for power shall be assessed as part of the recurring charge for rack/bay space. If the power requirements for Talk America's equipment exceeds the capacity available, then such power requirements shall be assessed on an individual case basis.

8.2.1 Adjacent Collocation Power. Charges for AC power will be assessed per breaker ampere per month. Rates include the provision of commercial and standby AC power, where available. When obtaining power from a BellSouth service panel, protection devices and power cables must be engineered (sized), and installed by Talk America's BellSouth Certified Supplier except that BellSouth shall engineer and install protection devices and power cables for Adjacent Collocation. Talk America's BellSouth Certified Supplier must also provide a copy of the engineering power specification prior to the equipment becoming operational. Charges for AC power shall be assessed pursuant to the rates specified in Exhibit C. AC power voltage and phase ratings shall be determined on a per location basis. At Talk America's option, Talk America may arrange for AC power in an Adjacent Collocation arrangement from a retail provider of electrical power.

8.3 Security Escort. A security escort will be required whenever Talk America or its approved agent desires access to the Remote Site Location after the one accompanied site visit allowed pursuant to Section 5 prior to completing BellSouth's Security Training requirements. Rates for a security escort are assessed according to the schedule appended hereto as Exhibit C beginning with the scheduled escort time. BellSouth will wait for one-half (1/2) hour after the scheduled time for such an escort and Talk America shall pay for such half-hour charges in the event Talk America fails to show up.

8.4 Other. If no rate is identified in the contract, the rate for the specific service or function will be negotiated by the Parties upon request by either Party.

9. Insurance

9.1 Talk America shall, at its sole cost and expense, procure, maintain, and keep in force insurance as specified in this Section and underwritten by insurance companies licensed to do business in the states applicable under this Attachment and having a Best's Insurance Rating of A-.

9.2 Talk America shall maintain the following specific coverage:

9.2.1 Commercial General Liability coverage in the amount of ten million dollars ($10,000,000.00) or a combination of Commercial General Liability and Excess/Umbrella coverage totaling not less than ten million dollars ($10,000,000.00). BellSouth shall be named as an Additional Insured on the Commercial General Liability policy as specified herein.

9.2.2 Statutory Workers Compensation coverage and Employers Liability coverage in the amount of one hundred thousand dollars ($100,000.00) each accident, one hundred thousand dollars ($100,000.00) each employee by disease, and five hundred thousand dollars ($500,000.00) policy limit by disease.

9.2.3 All Risk Property coverage on a full replacement cost basis insuring all of Talk America's real and personal property situated on or within BellSouth's Remote Site Location.

9.2.4 Talk America may elect to purchase business interruption and contingent business interruption insurance, having been advised that BellSouth assumes no liability for loss of profit or revenues should an interruption of service occur.

9.3 The limits set forth in Section 9.2 above may be increased by BellSouth from time to time during the term of this Attachment upon thirty (30) calendar days notice to Talk America to at least such minimum limits as shall then be customary with respect to comparable occupancy of BellSouth structures.

9.4 All policies purchased by Talk America shall be deemed to be primary and not contributing to or in excess of any similar coverage purchased by BellSouth. All insurance must be in effect on or before the date equipment is delivered to BellSouth's Remote Site Location and shall remain in effect for the term of this Attachment or until all Talk America's property has been removed from BellSouth's Remote Site Location, whichever period is longer. If Talk America fails to maintain required coverage, BellSouth may pay the premiums thereon and seek reimbursement of same from Talk America.

9.5 Talk America shall submit certificates of insurance reflecting the coverage required pursuant to this Section a minimum of ten (10) business days prior to the commencement of any work in the Remote Collocation Space. Failure to meet this

interval may result in construction and equipment installation delays. Talk America shall arrange for BellSouth to receive thirty (30) business days' advance notice of cancellation from Talk America's insurance company. Talk America shall forward a certificate of insurance and notice of cancellation/non-renewal to BellSouth at the following address:

BellSouth Telecommunications, Inc.
Attn.: Risk Management Coordinator
17H53 BellSouth Center
675 W. Peachtree Street
Atlanta, Georgia 30375

9.6 Talk America must conform to recommendations made by BellSouth's fire insurance company to the extent BellSouth has agreed to, or shall hereafter agree to, such recommendations.

9.7 Self-Insurance. If Talk America's net worth exceeds five hundred million dollars ($500,000,000), Talk America may elect to request self-insurance status in lieu of obtaining any of the insurance required in Sections 9.2.1 and 9.2.2. Talk America shall provide audited financial statements to BellSouth thirty (30) calendar days prior to the commencement of any work in the Remote Collocation Space. BellSouth shall then review such audited financial statements and respond in writing to Talk America in the event that self-insurance status is not granted to Talk America. If BellSouth approves Talk America for self-insurance, Talk America shall annually furnish to BellSouth, and keep current, evidence of such net worth that is attested to by one of Talk America's corporate officers. The ability to self-insure shall continue so long as Talk America meets all of the requirements of this Section. If the Talk America subsequently no longer satisfies this Section, Talk America is required to purchase insurance as indicated by Sections 9.2.1 and Section 9.2.2.

9.8 The net worth requirements set forth in Section 9.7 may be increased by BellSouth from time to time during the term of this Attachment upon thirty (30) calendar days' notice to Talk America to at least such minimum limits as shall then be customary with respect to comparable occupancy of BellSouth structures.

9.9 Failure to comply with the provisions of this Section will be deemed a material breach of this Attachment.

10. Mechanics Liens

10.1 If any mechanics lien or other liens shall be filed against property of either Party (BellSouth or Talk America), or any improvement thereon by reason of or arising out of any labor or materials furnished or alleged to have been furnished or to be furnished to or for the other Party or by reason of any changes, or additions to said property made at the request or under the direction of the other Party, the other Party directing or requesting those changes shall, within thirty (30) business days after receipt of

written notice from the Party against whose property said lien has been filed, either pay such lien or cause the same to be bonded off the affected property in the manner provided by law. The Party causing said lien to be placed against the property of the other shall also defend, at its sole cost and expense, on behalf of the other, any action, suit or proceeding which may be brought for the enforcement of such liens and shall pay any damage and discharge any judgment entered thereon.

11. Inspections

11.1 BellSouth may conduct an inspection of Talk America's equipment and facilities in the Remote Collocation Space(s) prior to the activation of facilities between Talk America's equipment and equipment of BellSouth. BellSouth may conduct an inspection if Talk America adds equipment and may otherwise conduct routine inspections at reasonable intervals mutually agreed upon by the Parties. BellSouth shall provide Talk America with a minimum of forty-eight (48) hours or two (2) business days, whichever is greater, advance notice of all such inspections. All costs of such inspection shall be borne by BellSouth.

12. Security and Safety Requirements

12.1 Unless otherwise specified, Talk America will be required, at its own expense, to conduct a statewide investigation of criminal history records for each Talk America employee hired in the past five years being considered for work on the BellSouth Remote Site Location, for the states/counties where the Talk America employee has worked and lived for the past five years. Where state law does not permit statewide collection or reporting, an investigation of the applicable counties is acceptable. Talk America shall not be required to perform this investigation if an affiliated company of Talk America has performed an investigation of the Talk America employee seeking access, if such investigation meets the criteria set forth above. This requirement will not apply if Talk America has performed a pre-employment statewide investigation of criminal history records of the Talk America employee for the states/counties where the Talk America employee has worked and lived for the past five years or, where state law does not permit a statewide investigation, an investigation of the applicable counties.

12.2 Talk America will be required to administer to their personnel assigned to the BellSouth Premises security training either provided by BellSouth, or meeting criteria defined by BellSouth.

12.3 Talk America shall provide its employees and agents with picture identification, which must be worn, and visible at all times while in the Remote Collocation Space or other areas in or around the Remote Site Location. The photo Identification card shall bear, at a minimum, the employee's name and photo, and Talk America's name. BellSouth reserves the right to remove from its Remote Site Location any employee of Talk America not possessing identification issued by Talk America or who have violated

any of BellSouth's policies as outlined in the CLEC Security Training documents. Talk America shall hold BellSouth harmless for any damages resulting from such removal of its personnel from BellSouth Remote Site Location. Talk America shall be solely responsible for ensuring that any Guest of Talk America is in compliance with all subsections of this Section 12.

12.4 Talk America shall not assign to the BellSouth Remote Site Location any personnel with records of felony criminal convictions. Talk America shall not assign to the BellSouth Remote Site Location any personnel with records of misdemeanor convictions, except for misdemeanor traffic violations, without advising BellSouth of the nature and gravity of the offense(s). BellSouth reserves the right to refuse access to any Talk America personnel who have been identified to have misdemeanor criminal convictions. Notwithstanding the foregoing, in the event that Talk America chooses not to advise BellSouth of the nature and gravity of any misdemeanor conviction, Talk America may, in the alternative, certify to BellSouth that it shall not assign to the BellSouth Remote Site Location any personnel with records of misdemeanor convictions (other than misdemeanor traffic violations).

12.4.1 Talk America shall not knowingly assign to the BellSouth Remote Site Location any individual who was a former employee of BellSouth and whose employment with BellSouth was terminated for a criminal offense whether or not BellSouth sought prosecution of the individual for the criminal offense.

12.4.2 Talk America shall not knowingly assign to the BellSouth Remote Site Location any individual who was a former contractor of BellSouth and whose access to a BellSouth Remote Site Location was revoked due to commission of a criminal offense whether or not BellSouth sought prosecution of the individual for the criminal offense.

12.5 For each Talk America employee or agent hired by Talk America within five years of being considered for work on the BellSouth Remote Site Location, who requires access to a BellSouth Remote Site Location pursuant to this Attachment, Talk America shall furnish BellSouth, prior to an employee gaining such access, a certification that the aforementioned background check and security training were completed. The certification will contain a statement that no felony convictions were found and certifying that the security training was completed by the employee. If the employee's criminal history includes misdemeanor convictions, Talk America will disclose the nature of the convictions to BellSouth at that time. In the alternative, Talk America may certify to BellSouth that it shall not assign to the BellSouth Remote Site Location any personnel with records of misdemeanor convictions other than misdemeanor traffic violations.

12.5.1 For all other Talk America employees requiring access to a BellSouth Remote Site Location pursuant to this Attachment, Talk America shall furnish BellSouth, prior to an employee gaining such access, a certification that the employee is not subject to the

requirements of Section 12.5 above and that security training was completed by the employee.

12.6 At BellSouth's request, Talk America shall promptly remove from BellSouth's Remote Site Location any employee of Talk America BellSouth does not wish to grant access to its Remote Site Location 1) pursuant to any investigation conducted by BellSouth or 2) prior to the initiation of an investigation if an employee of Talk America is found interfering with the property or personnel of BellSouth or another CLEC, provided that an investigation shall promptly be commenced by BellSouth.

12.7 Notification to BellSouth. BellSouth reserves the right to interview Talk America's employees, agents, or contractors in the event of wrongdoing in or around BellSouth's property or involving BellSouth's or another CLEC's property or personnel, provided that BellSouth shall provide reasonable notice to Talk America's Security contact of such interview. Talk America and its contractors shall reasonably cooperate with BellSouth's investigation into allegations of wrongdoing or criminal conduct committed by, witnessed by, or involving Talk America's employees, agents, or contractors. Additionally, BellSouth reserves the right to bill Talk America for all reasonable costs associated with investigations involving its employees, agents, or contractors if it is established and mutually agreed in good faith that Talk America's employees, agents, or contractors are responsible for the alleged act. BellSouth shall bill Talk America for BellSouth property, which is stolen or damaged where an investigation determines the culpability of Talk America's employees, agents, or contractors and where Talk America agrees, in good faith, with the results of such investigation. Talk America shall notify BellSouth in writing immediately in the event that the Talk America discovers one of its employees already working on the BellSouth Remote Site Location is a possible security risk. Upon request of the other Party, the Party who is the employer shall discipline consistent with its employment practices, up to and including removal from BellSouth's Remote Site Location, any employee found to have violated the security and safety requirements of this section. Talk America shall hold BellSouth harmless for any damages resulting from such removal of its personnel from BellSouth's Remote Site Location.

12.8 Use of Supplies. Unauthorized use of telecommunications equipment or supplies by either Party, whether or not used routinely to provide telephone service (e.g. plug-in cards,) will be strictly prohibited and handled appropriately. Costs associated with such unauthorized use may be charged to the offending Party, as may be all associated investigative costs.

12.9 Use of Official Lines. Except for non-toll calls necessary in the performance of their work, neither Party shall use the telephones of the other Party on the BellSouth Remote Site Location. Charges for unauthorized telephone calls may be charged to the offending Party, as may be all associated investigative costs.

12.10 Accountability. Full compliance with the Security requirements of this Section shall in no way limit the accountability of either Party to the other for the improper actions of its employees.

13. Destruction of Remote Collocation Space

13.1 In the event a Remote Collocation Space is wholly or partially damaged by fire, windstorm, tornado, flood or by similar causes to such an extent as to be rendered wholly unsuitable for Talk America's permitted use hereunder, then either Party may elect within ten (10) business days after such damage, to terminate this Attachment with respect to the affected Remote Collocation Space, and if either Party shall so elect, by giving the other written notice of termination, both Parties shall stand released of and from further liability under the terms hereof with respect to such Remote Collocation Space. If the Remote Collocation Space shall suffer only minor damage and shall not be rendered wholly unsuitable for Talk America's permitted use, or is damaged and the option to terminate is not exercised by either Party, BellSouth covenants and agrees to proceed promptly without expense to Talk America, except for improvements not the property of BellSouth, to repair the damage. BellSouth shall have a reasonable time within which to rebuild or make any repairs, and such rebuilding and repairing shall be subject to delays caused by storms, shortages of labor and materials, government regulations, strikes, walkouts, and causes beyond the control of BellSouth, which causes shall not be construed as limiting factors, but as exemplary only. Talk America may, at its own expense, accelerate the rebuild of its Remote Collocation Space and equipment provided however that a BellSouth Certified Contractor is used and the necessary space preparation has been completed. Rebuild of equipment must be performed by a BellSouth Certified Vendor. If Talk America' s acceleration of the project increases the cost of the project, then those additional charges will be incurred by Talk America. Where allowed and where practical, Talk America may erect a temporary facility while BellSouth rebuilds or makes repairs. In all cases where the Remote Collocation Space shall be rebuilt or repaired, Talk America shall be entitled to an equitable abatement of rent and other charges, depending upon the unsuitability of the Remote Collocation Space for Talk America's permitted use, until such Remote Collocation Space is fully repaired and restored and Talk America's equipment installed therein (but in no event later than thirty (30) business days after the Remote Collocation Space is fully repaired and restored). Where Talk America has placed a Remote Site Adjacent Arrangement pursuant to Section 3, Talk America shall have the sole responsibility to repair or replace said Remote Site Adjacent Arrangement provided herein. Pursuant to this Section, BellSouth will restore the associated services to the Remote Site Adjacent Arrangement.

14. Eminent Domain

14.1 If the whole of a Remote Collocation Space or Remote Site Adjacent Arrangement shall be taken by any public authority under the power of eminent domain, then this

Attachment shall terminate with respect to such Remote Collocation Space or Remote Site Adjacent Arrangement as of the day possession shall be taken by such public authority and rent and other charges for the Remote Collocation Space or Remote Site Adjacent Arrangement shall be paid up to that day with proportionate refund by BellSouth of such rent and charges as may have been paid in advance for a period subsequent to the date of the taking. If any part of the Remote Collocation Space or Remote Site Adjacent Arrangement shall be taken under eminent domain, BellSouth and Talk America shall each have the right to terminate this Attachment with respect to such Remote Collocation Space or Remote Site Adjacent Arrangement and declare the same null and void, by written notice of such intention to the other Party within ten (10) business days after such taking.

15. <u>Nonexclusivity</u>

15.1 Talk America understands that this Attachment is not exclusive and that BellSouth may enter into similar agreements with other Parties. Assignment of space pursuant to all such agreements shall be determined by space availability and made on a first come, first served basis.

ENVIRONMENTAL AND SAFETY PRINCIPLES

The following principles provide basic guidance on environmental and safety issues when applying for and establishing Physical Collocation arrangements.

1. GENERAL PRINCIPLES

1.1 Compliance with Applicable Law. BellSouth and Talk America agree to comply with applicable federal, state, and local environmental and safety laws and regulations including U.S. Environmental Protection Agency (USEPA) regulations issued under the Clean Air Act (CAA), Clean Water Act (CWA), Resource Conservation and Recovery Act (RCRA), Comprehensive Environmental Response, Compensation and Liability Act (CERCLA), Superfund Amendments and Reauthorization Act (SARA), the Toxic Substances Control Act (TSCA), and OSHA regulations issued under the Occupational Safety and Health Act of 1970, as amended and NFPA and National Electrical Codes (NEC) and the NESC ("Applicable Laws"). Each Party shall notify the other if compliance inspections are conducted by regulatory agencies and/or citations are issued that relate to any aspect of this Attachment.

1.2 Notice. BellSouth and Talk America shall provide notice to the other, including Material Safety Data Sheets (MSDSs), of known and recognized physical hazards or Hazardous Chemicals existing on site or brought on site. Each Party is required to provide specific notice for known potential Imminent Danger conditions. Talk America should contact 1-800-743-6737 for BellSouth MSDS sheets.

1.3 Practices/Procedures. BellSouth may make available additional environmental control procedures for Talk America to follow when working at a BellSouth Remote Site Location (See Section 2, below). These practices/procedures will represent the regular work practices required to be followed by the employees and contractors of BellSouth for environmental protection. Talk America will require its contractors, agents and others accessing the BellSouth Remote Site Location to comply with these practices. Section 2 lists the Environmental categories where BST practices should be followed by Talk America when operating in the BellSouth Remote Site Location.

1.4 Environmental and Safety Inspections. BellSouth reserves the right to inspect the Talk America space with proper notification. BellSouth reserves the right to stop any Talk America work operation that imposes Imminent Danger to the environment, employees or other persons in the area or Facility.

1.5 Hazardous Materials Brought On Site. Any hazardous materials brought into, used, stored or abandoned at the BellSouth Remote Site Location by Talk America are owned by Talk America. Talk America will indemnify BellSouth for claims, lawsuits or damages to persons or property caused by these materials. Without prior written BellSouth approval, no substantial new safety or environmental hazards can be created by Talk America or different hazardous materials used by Talk America at BellSouth

Facility. Talk America must demonstrate adequate emergency response capabilities for its materials used or remaining at the BellSouth Facility.

1.6 Spills and Releases. When contamination is discovered at a BellSouth Remote Site Location, the Party discovering the condition must notify BellSouth. All Spills or Releases of regulated materials will immediately be reported by Talk America to BellSouth.

1.7 Coordinated Environmental Plans and Permits. BellSouth and Talk America will coordinate plans, permits or information required to be submitted to government agencies, such as emergency response plans, spill prevention control and countermeasures (SPCC) plans and community reporting. If fees are associated with filing, BellSouth and Talk America will develop a cost sharing procedure. If BellSouth's permit or EPA identification number must be used, Talk America must comply with all of BellSouth's permit conditions and environmental processes, including environmental "best management practices (BMP)" (see Section 2, below) and/or selection of BST disposition vendors and disposal sites.

1.8 Environmental and Safety Indemnification. BellSouth and Talk America shall indemnify, defend and hold harmless the other Party from and against any claims (including, without limitation, third-party claims for personal injury or death or real or personal property damage), judgments, damages, (including direct and indirect damages, and punitive damages), penalties, fines, forfeitures, costs, liabilities, interest and losses arising in connection with the violation or alleged violation of any Applicable Law or contractual obligation or the presence or alleged presence of contamination arising out of the acts or omissions of the indemnifying Party, its agents, contractors, or employees concerning its operations at the Facility.

2. CATEGORIES FOR CONSIDERATION OF ENVIRONMENTAL ISSUES

When performing functions that fall under the following Environmental categories on BellSouth's Remote Site Location, Talk America agrees to comply with the applicable sections of the current issue of BellSouth's Environmental and Safety Methods and Procedures (M&Ps), incorporated herein by this reference. Talk America further agrees to cooperate with BellSouth to ensure that Talk America's employees, agents, and/or subcontractors are knowledgeable of and satisfy those provisions of BellSouth's Environmental M&Ps which apply to the specific Environmental function being performed by Talk America, its employees, agents and/or subcontractors.

The most current version of reference documentation must be requested from BellSouth.

ENVIRONMENTAL CATEGORIES	ENVIRONMENTAL ISSUES	ADDRESSED BY THE FOLLOWING DOCUMENTATION
Disposal of hazardous material or other regulated material (e.g., batteries, fluorescent tubes, solvents & cleaning materials)	Compliance with all applicable local, state, & federal laws and regulations Pollution liability insurance EVET approval of contractor	• Std T&C 450 • Fact Sheet Series 17000 • Std T&C 660-3 • Approved Environmental Vendor List (Contact E/S Management)
Emergency response	Hazmat/waste release/spill firesafety emergency	• Fact Sheet Series 1700 • Building Emergency Operations Plan (EOP) (specific to and located on Remote Site Location)
Contract labor/outsourcing for services with environmental implications to be performed on BellSouth Remote Site Location (e.g., disposition of hazardous material/waste; maintenance of storage tanks)	Compliance with all applicable local, state, & federal laws and regulations Performance of services in accordance with BST's environmental M&Ps Insurance	• Std T&C 450 • Std T&C 450-B • (Contact E/S for copy of appropriate E/S M&Ps.) • Std T&C 660
Transportation of hazardous material	Compliance with all applicable local, state, & federal laws and regulations Pollution liability insurance EVET approval of contractor	• Std T&C 450 • Fact Sheet Series 17000 • Std T&C 660-3 • Approved Environmental Vendor List (Contact E/S Management)
Maintenance/operations work which may produce a waste Other maintenance work	Compliance with all application local, state, & federal laws and regulations Protection of BST employees and equipment	• Std T&C 450 • 29CFR 1910.147 (OSHA Standard) • 29CFR 1910 Subpart O (OSHA Standard)
Janitorial services	All waste removal and disposal	• P&SM Manager -

	must conform to all applicable federal, state and local regulations All Hazardous Material and Waste Asbestos notification and protection of employees and equipment	Procurement • Fact Sheet Series 17000 • GU-BTEN-001BT, Chapter 3 • BSP 010-170-001BS (Hazcom)
Manhole cleaning	Compliance with all applicable local, state, & federal laws and regulations Pollution liability insurance EVET approval of contractor	• Std T&C 450 • Fact Sheet 14050 • BSP 620-145-011PR Issue A, August 1996 • Std T&C 660-3 • Approved Environmental Vendor List (Contact E/S Management)
Removing or disturbing building materials that may contain asbestos	Asbestos work practices	• GU-BTEN-001BT, Chapter 3 For questions regarding removing or disturbing materials that contain asbestos, call the BellSouth Building Service Center: AL, MS, TN, KY & LA (local area code) 557-6194 FL, GA, NC & SC (local area code) 780-2740

3. DEFINITIONS

Generator. Under RCRA, the person whose act produces a Hazardous Waste, as defined in 40 CFR 261, or whose act first causes a Hazardous Waste to become subject to regulation. The Generator is legally responsible for the proper management and disposal of Hazardous Wastes in accordance with regulations.

Hazardous Chemical. As defined in the U.S. Occupational Safety and Health (OSHA) hazard communication standard (29 CFR 1910.1200), any chemical which is a health hazard or physical hazard.

Hazardous Waste. As defined in section 1004 of RCRA.

Imminent Danger. Any conditions or practices at a facility which are such that a danger exists which could reasonably be expected to cause immediate death or serious harm to people or

immediate significant damage to the environment or natural resources.

Spill or Release. As defined in Section 101 of CERCLA.

4. ACRONYMS

E/S – Environmental/Safety

EVET - Environmental Vendor Evaluation Team

DEC/LDEC - Department Environmental Coordinator/Local Department Environmental Coordinator

GU-BTEN-001BT - BellSouth Environmental Methods and Procedures

NESC - National Electrical Safety Codes

P&SM - Property & Services Management

Std. T&C - Standard Terms & Conditions

THREE-MONTH CLEC FORECAST

CLEC NAME _____ **DATE _____**

STATE	Remote Site/City	CAGED Sq. Ft.	CAGE-LESS # Bays	FRAME TERMINATIONS	CLEC Provided BDFB--Amps Load	BST Provided BDFB---Amps Load	Heat Dissipation BTU/Hour	Entrance Facilities # sheaths & # fibers	Proposed Application Date	NOTES

Notes: Forecast information will be used for no other purpose than collocation planning.

Version 1Q02: 02-20-02

COLLOCATION - Alabama														Attachment: 4		Exhibit: D	
CATEGORY		RATE ELEMENTS	Interim	Zone	BCS	USOC	RATES($)					Svc Order Submitted Elec per LSR	Svc Order Submitted Manually per LSR	Incremental Charge - Manual Svc Order vs. Electronic-1st	Incremental Charge - Manual Svc Order vs. Electronic-Add'l	Incremental Charge - Manual Svc Order vs. Electronic-Disc 1st	Incremental Charge - Manual Svc Order vs. Electronic-Disc Add'l
							Recurring	Nonrecurring		Nonrecurring Disconnect		OSS Rates($)					
								First	Add'l	First	Add'l	SOMEC	SOMAN	SOMAN	SOMAN	SOMAN	SOMAN
PHYSICAL COLLOCATION																	
		Physical Collocation - Application Fee - Initial			CLO	PE1BA		3,760.00	3,760.00								
		Physical Collocation - Application Fee - Subsequent			CLO	PE1CA		3,134.00	3,134.00								
		Physical Collocation Reduced Rate - Application Fee - Subsequent			CLO	PE1BL		742.15									
		Physical Collocation - Space Preparation - Firm Order Processing	I		CLO	PE1SJ		1,211.00	1,211.00								
		Physical Collocation - Space Preparation - C.O. Modification per square ft.	I		CLO	PE1SK	2.24										
		Physical Collocation - Space Preparation - Common Systems Modification per square ft. - Cageless	I		CLO	PE1SL	3.01										
		Physical Collocation - Space Preparation - Common Systems Modification per Cage	I		CLO	PE1SM	102.16										
		Physical Collocation - Cable Installation			CLO	PE1BD		1,751.00	1,751.00								
		Physical Collocation - Floor Space per Sq. Ft.			CLO	PE1PJ	3.68										
		Physical Collocation - Cable Support Structure			CLO	PE1PM	19.67										
		Physical Collocation - Power -48V DC Power, per Fused Amp	I		CLO	PE1PL	7.14										
		Physical Collocation - Power Reduction, Application Fee	I		CLO	PE1PR		399.51									
		Physical Collocation - 120V, Single Phase Standby Power Rate	I		CLO	PE1FB	5.63										
		Physical Collocation - 240V, Single Phase Standby Power Rate	I		CLO	PE1FD	11.26										
		Physical Collocation - 120V, Three Phase Standby Power Rate	I		CLO	PE1FE	16.89										
		Physical Collocation - 277V, Three Phase Standby Power Rate	I		CLO	PE1FG	38.99										
		Physical Collocation - 2-Wire Cross-Connects			UEANL,UEA,UDN,UDC,UAL,UHL,UCL,UEQ, UDL, UNCVX, UNLDX, UNCNX	PE1P2	0.031	33.68	31.79								
		Physical Collocation - 4-Wire Cross-Connects			CLO, UAL, UDL, UDN, UEA, UHL, UNCVX, UNCDX, UCL	PE1P4	0.062	33.63	31.67								
		Physical Collocation - DS1 Cross-Connects			CLO,UEANL,UEQ,WDS1L,WDS1S, USL, U1TD1, UXTD1, UNC1X, ULDD1, USLEL, UNLD1, UDL	PE1P1	1.28	52.93	39.87								
		Physical Collocation - DS3 Cross-Connects			CLO, UE3,U1TD3, UXTD3, UXTS1, UNC3X, UNCSX, ULDD3, U1TS1,ULDS1, UNLD3, UDL	PE1P3	16.27	51.99	38.59								
		Physical Collocation - 2-Fiber Cross-Connect			CLO, ULDO3, ULD12, ULD48, U1TO3, U1T12, U1T48, UDLO3, UDL12, UDF	PE1F2	3.23	52.00	38.60								
		Physical Collocation - 4-Fiber Cross-Connect			CLO, ULDO3, ULD12, ULD48, U1TO3, U1T12, U1T48, UDLO3, UDL12, UDF	PE1F4	5.73	64.54	51.14								
		Physical Collocation - Welded Wire Cage - First 100 Sq. Ft.			CLO	PE1BW	178.65										

COLLOCATION - Alabama														Attachment: 4		Exhibit: D	
CATEGORY		RATE ELEMENTS	Interim	Zone	BCS	USOC	RATES($)					Svc Order Submitted Elec per LSR	Svc Order Submitted Manually per LSR	Incremental Charge - Manual Svc Order vs. Electronic-1st	Incremental Charge - Manual Svc Order vs. Electronic-Add'l	Incremental Charge - Manual Svc Order vs. Electronic-Disc 1st	Incremental Charge - Manual Svc Order vs. Electronic-Disc Add'l
							Recurring	Nonrecurring		Nonrecurring Disconnect		OSS Rates($)					
								First	Add'l	First	Add'l	SOMEC	SOMAN	SOMAN	SOMAN	SOMAN	SOMAN
		Physical Collocation - Welded Wire Cage - Add'l 50 Sq. Ft.			CLO	PE1CW	17.52										
		Physical Collocation - Security Access System - Security System per Central Office			CLO	PE1AX	54.14										
		Physical Collocation - Security Access System - New Access Card Activation, per Card			CLO	PE1A1	0.0607	46.20	46.20	8.72	8.72						
		Physical Collocation-Security Access System-Administrative Change, existing Access Card, per Card			CLO	PE1AA		15.40	15.40								
		Physical Collocation - Security Access System - Replace Lost or Stolen Card, per Card			CLO	PE1AR		45.02	45.02								
		Physical Collocation - Security Access - Initial Key, per Key			CLO	PE1AK		26.19	26.19								
		Physical Collocation - Security Access - Key, Replace Lost or Stolen Key, per Key			CLO	PE1AL		26.19	26.19								
		Physical Collocation - Space Availability Report per premises	I		CLO	PE1SR		2,150.00	2,150.00								
		POT Bay Arrangements prior to 6/1/99 - 2-Wire Cross-Connect, per cross-connect			UEANL,UEA,UDN,UDC,UAL,UHL,UCL,UEQ,CLO,UDL, UNCVX, UNCDX, UNCNX	PE1PE	0.08										
		POT Bay Arrangements prior to 6/1/99 - 4-Wire Cross-Connect, per cross-connect			UEANL,UEA,UDN,UDC,UAL,UHL,UCL,UEQ,CLO, USL, UNCVX, UNCDX	PE1PF	0.17										
		POT Bay Arrangements prior to 6/1/99 - DS1 Cross-Connect, per cross-connect			UEANL,UEA,UDN,UDC,UAL,UHL,UCL,UEQ,CLO,WDS1L,WDS1S, USL, U1TD1, UXTD1, UNC1X, ULDD1, USLEL, UNLD1	PE1PG	0.69										
		POT Bay Arrangements prior to 6/1/99 - DS3 Cross-Connect, per cross-connect			UEANL,UEA,UDN,UDC,UAL,UHL,UCL,UEQ,CLO,UE3, U1TD3, UXTD3, UXTS1, UNC3X, UNCSX, ULDD3, U1TS1, ULDS1, UNLD3, UDL, UDLSX	PE1PH	4.74										
		POT Bay Arrangements prior to 6/1/99 - 2-Fiber Cross-Connect, per cross-connect			UEANL,UEA,UDN,UDC,UAL,UHL,UCL,UEQ,CLO, ULDO3, ULD12, ULD48, U1TO3, U1T12, U1T48, UDLO3, UDL12, UDF	PE1B2	32.02										
		POT Bay Arrangements prior to 6/1/99 - 4-Fiber Cross-Connect, per cross-connect			UEANL,UEA,UDN,UDC,UAL,UHL,UCL,UEQ,CLO, ULDO3, ULD12, ULD48, U1TO3, U1T12, U1T48, UDLO3, UDL12, UDF	PE1B4	40.48										
		Physical Collocation - Request Resend of CFA Information, per CLLI			CLO	PE1C9		77.56									
		Collocation Cable Records - per request			CLO	PE1CR		1,518.57		265.99							
		Collocation Cable Records - VG/DS0 Cable, per cable record			CLO	PE1CD		653.83		378.24							
		Collocation Cable Records - VG/DS0 Cable, per each 100 pair			CLO	PE1CO		9.62	9.62	11.79	11.79						
		Collocation Cable Records - DS1, per T1TIE			CLO	PE1C1		4.50	4.50	5.52	5.52						

COLLOCATION - Alabama														Attachment: 4		Exhibit: D	
CATEGORY		RATE ELEMENTS	Interim	Zone	BCS	USOC	RATES($)					Svc Order Submitted Elec per LSR	Svc Order Submitted Manually per LSR	Incremental Charge - Manual Svc Order vs. Electronic-1st	Incremental Charge - Manual Svc Order vs. Electronic-Add'l	Incremental Charge - Manual Svc Order vs. Electronic-Disc 1st	Incremental Charge - Manual Svc Order vs. Electronic-Disc Add'l
							Recurring	Nonrecurring		Nonrecurring Disconnect		OSS Rates($)					
								First	Add'l	First	Add'l	SOMEC	SOMAN	SOMAN	SOMAN	SOMAN	SOMAN
		Collocation Cable Records - DS3, per T3TIE			CLO	PE1C3		15.75	15.75	19.32	19.32						
		Collocation Cable Records - Fiber Cable, per 99 fiber records			CLO	PE1CB		168.97	168.97	154.25	154.25						
		Physical Collocation - Security Escort - Basic, per Half Hour			CLO,CLORS	PE1BT		33.85	21.45								
		Physical Collocation - Security Escort - Overtime, per Half Hour			CLO,CLORS	PE1OT		44.09	27.71								
		Physical Collocation - Security Escort - Premium, per Half Hour			CLO,CLORS	PE1PT		54.33	33.96								
		V to P Conversion, Per Customer Request-Voice Grade			CLO	PE1BV	33.00										
		V to P Conversion, Per Customer Request-DS0			CLO	PE1BO	33.00										
		V to P Conversion, Per Customer Request-DS1			CLO	PE1B1	52.00										
		V to P Conversion, Per Customer request-DS3			CLO	PE1B3	52.00										
		V to P Conversion, Per Customer Request per VG Circuit Reconfigured			CLO	PE1BR	23.00										
		V to P Conversion, Per Customer Request per DS0 Circuit Reconfigured			CLO	PE1BP	23.00										
		V to P Conversion, Per Customer Request per DS1 Circuit Reconfigured			CLO	PE1BS	33.00										
		V to P Conversion, Per Customer Request per DS3 Circuit Reconfigured			CLO	PE1BE	37.00										
		V to P Conversion, Cable Pairs Assigned to Collo Space per 700 prs or fraction thereof			CLO	PE1B7	592.00										
		Physical Collocation - Co-Carrier Cross Connects - Fiber Cable Support Structure, per cable, per linear ft.			CLO,UDF	PE1ES	0.0011										
		Physical Collocation - Co-Carrier Cross Connects - Copper/Coax Cable Support Structure, per cable, per lin. ft.			CLO, UE3, USL	PE1DS	0.0016										
		Physical Collocation - Co-Carrier Cross Connects - Application Fee, per application			CLO	PE1DT		584.22									
ADJACENT COLLOCATION																	
		Adjacent Collocation - Space Charge per Sq. Ft.			CLOAC	PE1JA	0.2542										
		Adjacent Collocation - Electrical Facility Charge per Linear Ft.			CLOAC	PE1JC	5.44										
		Adjacent Collocation - 2-Wire Cross-Connects			CLOAC	PE1P2	0.0598	24.95	23.97	12.80	11.67						
		Adjacent Collocation - 4-Wire Cross-Connects			UEA,UHL,UDL,UCL, CLOAC	PE1P4	0.1196	25.14	24.11	13.18	11.96						
		Adjacent Collocation - DS1 Cross-Connects			USL,CLOAC	PE1P1	1.04	44.19	32.13	12.94	11.82						
		Adjacent Collocation - DS3 Cross-Connects			CLOAC	PE1P3	14.12	41.93	30.69	14.72	12.05						
		Adjacent Collocation - 2-Fiber Cross-Connect			CLOAC	PE1F2	2.39	41.93	30.69	14.72	12.06						
		Adjacent Collocation - 4-Fiber Cross-Connect			CLOAC	PE1F4	4.57	51.14	39.90	18.97	16.30						
		Adjacent Collocation - Application Fee			CLOAC	PE1JB		1,555.00		0.99							
		Adjacent Collocation - 120V, Single Phase Standby Power Rate per AC Breaker Amp			CLOAC	PE1FB	5.39										
		Adjacent Collocation - 240V, Single Phase Standby Power Rate per AC Breaker Amp			CLOAC	PE1FD	10.79										
		Adjacent Collocation - 120V, Three Phase Standby Power Rate per AC Breaker Amp			CLOAC	PE1FE	16.18										
		Adjacent Collocation - 277V, Three Phase Standby Power Rate per AC Breaker Amp			CLOAC	PE1FG	37.37										
PHYSICAL COLLOCATION IN THE REMOTE SITE																	
		Physical Collocation in the Remote Site - Application Fee			CLORS	PE1RA		608.17	608.17	323.44	323.44						
		Cabinet Space in the Remote Site per Bay/ Rack			CLORS	PE1RB	224.82										
		Physical Collocation in the Remote Site - Security Access - Key			CLORS	PE1RD		25.88	25.88								
		Physical Collocation in the Remote Site - Space Availability Report per Premises Requested			CLORS	PE1SR		229.02	229.02								
		Physical Collocation in the Remote Site - Remote Site CLLI Code Request, per CLLI Code Requested			CLORS	PE1RE		74.22	74.22								
		Remote Site DLEC Data (BRSDD), per Compact Disk, per CO			CLORS	PE1RR		233.38									
PHYSICAL COLLOCATION IN THE REMOTE SITE - ADJACENT																	
		Remote Site-Adjacent Collocation - AC Power, per breaker amp			CLORS	PE1RS	6.27										

COLLOCATION - Alabama														Attachment: 4		Exhibit: D	
CATEGORY		RATE ELEMENTS	Interim	Zone	BCS	USOC	RATES($)					Svc Order Submitted Elec per LSR	Svc Order Submitted Manually per LSR	Incremental Charge - Manual Svc Order vs. Electronic-1st	Incremental Charge - Manual Svc Order vs. Electronic-Add'l	Incremental Charge - Manual Svc Order vs. Electronic-Disc 1st	Incremental Charge - Manual Svc Order vs. Electronic-Disc Add'l
							Recurring	Nonrecurring		Nonrecurring Disconnect		OSS Rates($)					
								First	Add'l	First	Add'l	SOMEC	SOMAN	SOMAN	SOMAN	SOMAN	SOMAN
		Remote Site-Adjacent Collocation - Real Estate, per square foot			CLORS	PE1RT	0.134										
		Remote Site-Adjacent Collocation-Application Fee			CLORS	PE1RU		755.62	755.62								
	NOTE: If Security Escort and/or Add'l Engineering Fees become necessary for remote site collocation, the Parties will negotiate appropriate rates.																

COLLOCATION - Florida														Attachment: 4		Exhibit: D	
CATEGORY		RATE ELEMENTS	Interim	Zone	BCS	USOC	RATES($)					Svc Order Submitted Elec per LSR	Svc Order Submitted Manually per LSR	Incremental Charge - Manual Svc Order vs. Electronic-1st	Incremental Charge - Manual Svc Order vs. Electronic-Add'l	Incremental Charge - Manual Svc Order vs. Electronic-Disc 1st	Incremental Charge - Manual Svc Order vs. Electronic-Disc Add'l
							Recurring	Nonrecurring		Nonrecurring Disconnect		OSS Rates($)					
								First	Add'l	First	Add'l	SOMEC	SOMAN	SOMAN	SOMAN	SOMAN	SOMAN
PHYSICAL COLLOCATION																	
		Physical Collocation - Application Fee - Initial			CLO	PE1BA		2,597.00		1.01							
		Physical Collocation - Application Fee - Subsequent			CLO	PE1CA		2,236.00									
		Physical Collocation Reduced Rate - Application Fee - Subsequent			CLO	PE1BL		742.00									
		Physical Collocation - Space Preparation - Firm Order Processing			CLO	PE1SJ		288.93									
		Physical Collocation - Space Preparation - C.O. Modification per square ft.			CLO	PE1SK	2.38										
		Physical Collocation - Space Preparation - Common Systems Modification per square ft. - Cageless			CLO	PE1SL	2.96										
		Physical Collocation - Space Preparation - Common Systems Modification per Cage			CLO	PE1SM	92.55										
		Physical Collocation - Cable Installation per Cable			CLO	PE1BD		1,750.00		45.16							
		Physical Collocation - Floor Space per Sq. Ft.			CLO	PE1PJ	7.86										
		Physical Collocation - Cable Support Structure			CLO	PE1PM	18.96										
		Physical Collocation - Power, per Fused Amp			CLO	PE1PL	7.80										
		Physical Collocation - Power Reduction, Application Fee	I		CLO	PE1PR		399.43									
		Physical Collocation - 120V, Single Phase Standby Power Rate			CLO	PE1FB	5.56										
		Physical Collocation - 240V, Single Phase Standby Power Rate			CLO	PE1FD	11.14										
		Physical Collocation - 120V, Three Phase Standby Power Rate			CLO	PE1FE	16.70										
		Physical Collocation - 277V, Three Phase Standby Power Rate			CLO	PE1FG	38.57										
		Physical Collocation - 2-Wire Cross-Connects			UEANL,UEA,UDN,UDC,UAL,UHL,UCL,UEQ, UDL, UNCVX, UNLDX, UNCNX	PE1P2	0.0276	8.22	7.22	5.74	4.58						
		Physical Collocation - 4-Wire Cross-Connects			CLO, UAL, UDL, UDN, UEA, UHL, UNCVX, UNCDX, UCL	PE1P4	0.0552	8.42	7.36	5.90	4.66						
		Physical Collocation - DS1 Cross-Connects			CLO,UEANL,UEQ,WDS1L,WDS1S, USL, U1TD1, UXTD1, UNC1X, ULDD1, USLEL, UNLD1, UDL	PE1P1	1.32	27.77	15.52	5.93	4.77						
		Physical Collocation - DS3 Cross-Connects			CLO, UE3,U1TD3, UXTD3, UXTS1, UNC3X, UNCSX, ULDD3, U1TS1,ULDS1, UNLD3, UDL	PE1P3	16.81	25.48	14.05	7.77	5.01						
		Physical Collocation - 2-Fiber Cross-Connect			CLO, ULDO3, ULD12, ULD48, U1TO3, U1T12, U1T48, UDLO3, UDL12, UDF	PE1F2	3.34	41.94	30.52	13.91	11.16						
		Physical Collocation - 4-Fiber Cross-Connect			CLO, ULDO3, ULD12, ULD48, U1TO3, U1T12, U1T48, UDLO3, UDL12, UDF	PE1F4	5.92	51.30	39.87	18.29	15.54						
		Physical Collocation - Welded Wire Cage - First 100 Sq. Ft.			CLO	PE1BW	189.45										

COLLOCATION - Florida														Attachment: 4		Exhibit: D	
CATEGORY		RATE ELEMENTS	Interim	Zone	BCS	USOC	RATES($)					Svc Order Submitted Elec per LSR	Svc Order Submitted Manually per LSR	Incremental Charge - Manual Svc Order vs. Electronic-1st	Incremental Charge - Manual Svc Order vs. Electronic-Add'l	Incremental Charge - Manual Svc Order vs. Electronic-Disc 1st	Incremental Charge - Manual Svc Order vs. Electronic-Disc Add'l
							Recurring	Nonrecurring		Nonrecurring Disconnect		OSS Rates($)					
								First	Add'l	First	Add'l	SOMEC	SOMAN	SOMAN	SOMAN	SOMAN	SOMAN
		Physical Collocation - Welded Wire Cage - Add'l 50 Sq. Ft.			CLO	PE1CW	18.58										
		Physical Collocation - Security System Per Central Office Per Assignable Sq. Ft.			CLO	PE1AY	0.0105										
		Physical Collocation - Security Access System - New Access Card Activation, per Card			CLO	PE1A1	0.0577	55.80									
		Physical Collocation-Security Access System-Administrative Change, existing Access Card, per Card			CLO	PE1AA		15.65									
		Physical Collocation - Security Access System - Replace Lost or Stolen Card, per Card			CLO	PE1AR		45.75									
		Physical Collocation - Security Access - Initial Key, per Key			CLO	PE1AK		26.30									
		Physical Collocation - Security Access - Key, Replace Lost or Stolen Key, per Key			CLO	PE1AL		26.30									
		Physical Collocation - Space Availability Report per premises			CLO	PE1SR		2,159.00									
		Physical Collocation - Request Resend of CFA Information, per CLLI			CLO	PE1C9		77.54									
		Collocation Cable Records - per request			CLO	PE1CR		1,525.00		267.08							
		Collocation Cable Records - VG/DS0 Cable, per cable record			CLO	PE1CD		656.50		379.78							
		Collocation Cable Records - VG/DS0 Cable, per each 100 pair			CLO	PE1CO		9.66	9.66	11.84	11.84						
		Collocation Cable Records - DS1, per T1TIE			CLO	PE1C1		4.52	4.52	5.54	5.54						
		Collocation Cable Records - DS3, per T3TIE			CLO	PE1C3		15.82	15.82	19.40	19.40						
		Collocation Cable Records - Fiber Cable, per 99 fiber records			CLO	PE1CB		169.67	169.67	154.89	154.89						
		Physical Collocation - Security Escort - Basic, Per Quarter Hour			CLO	PE1BQ		10.89									
		Physical Collocation - Security Escort - Overtime, Per Quarter Hour			CLO	PE1OQ		13.64									
		Physical Collocation - Security Escort - Premium, Per Quarter Hour			CLO	PE1PQ		16.40									
		Physical Collocation - Security Escort - Basic, per Half Hour			CLO,CLORS	PE1BT		33.99	21.54								
		Physical Collocation - Security Escort - Overtime, per Half Hour			CLO,CLORS	PE1OT		44.27	27.82								
		Physical Collocation - Security Escort - Premium, per Half Hour			CLO,CLORS	PE1PT		54.55	34.10								
		V to P Conversion, Per Customer Request-Voice Grade			CLO	PE1BV	33.00										
		V to P Conversion, Per Customer Request-DS0			CLO	PE1BO	33.00										
		V to P Conversion, Per Customer Request-DS1			CLO	PE1B1	52.00										
		V to P Conversion, Per Customer request-DS3			CLO	PE1B3	52.00										
		V to P Conversion, Per Customer Request per VG Circuit Reconfigured			CLO	PE1BR	23.00										
		V to P Conversion, Per Customer Request per DS0 Circuit Reconfigured			CLO	PE1BP	23.00										
		V to P Conversion, Per Customer Request per DS1 Circuit Reconfigured			CLO	PE1BS	33.00										
		V to P Conversion, Per Customer Request per DS3 Circuit Reconfigured			CLO	PE1BE	37.00										
		V to P Conversion, Cable Pairs Assigned to Collo Space per 700 prs or fraction thereof			CLO	PE1B7	592.00										
		Physical Collocation - Co-Carrier Cross Connects - Fiber Cable Support Structure, per cable, per linear ft.			CLO,UDF	PE1ES	0.001										
		Physical Collocation - Co-Carrier Cross Connects - Copper/Coax Cable Support Structure, per cable, per lin. ft.			CLO, UE3, USL	PE1DS	0.0014										
		Physical Collocation - Co-Carrier Cross Connects - Application Fee, per application			CLO	PE1DT		584.11									
ADJACENT COLLOCATION																	
		Adjacent Collocation - Space Charge per Sq. Ft.			CLOAC	PE1JA	0.1635										
		Adjacent Collocation - Electrical Facility Charge per Linear Ft.			CLOAC	PE1JC	5.11										
		Adjacent Collocation - 2-Wire Cross-Connects			CLOAC	PE1P2	0.0213	24.68	23.69	11.77	23.79						
		Adjacent Collocation - 4-Wire Cross-Connects			UEA,UHL,UDL,UCL, CLOAC	PE1P4	0.0426	24.88	23.83	12.04	10.80						

COLLOCATION - Florida														Attachment: 4		Exhibit: D	
CATEGORY		RATE ELEMENTS	Interim	Zone	BCS	USOC	RATES($)					Svc Order Submitted Elec per LSR	Svc Order Submitted Manually per LSR	Incremental Charge - Manual Svc Order vs. Electronic-1st	Incremental Charge - Manual Svc Order vs. Electronic-Add'l	Incremental Charge - Manual Svc Order vs. Electronic-Disc 1st	Incremental Charge - Manual Svc Order vs. Electronic-Disc Add'l
							Recurring	Nonrecurring		Nonrecurring Disconnect		OSS Rates($)					
								First	Add'l	First	Add'l	SOMEC	SOMAN	SOMAN	SOMAN	SOMAN	SOMAN
		Adjacent Collocation - DS1 Cross-Connects			USL,CLOAC	PE1P1	1.22	44.24	31.98	12.07	10.91						
		Adjacent Collocation - DS3 Cross-Connects			CLOAC	PE1P3	16.56	41.94	30.52	13.91	11.15						
		Adjacent Collocation - 2-Fiber Cross-Connect			CLOAC	PE1F2	2.81	41.94	30.52	13.91	11.16						
		Adjacent Collocation - 4-Fiber Cross-Connect			CLOAC	PE1F4	5.36	51.30	39.87	18.29	15.54						
		Adjacent Collocation - Application Fee			CLOAC	PE1JB		2,785.00		1.01							
		Adjacent Collocation - 120V, Single Phase Standby Power Rate per AC Breaker Amp			CLOAC	PE1FB	5.38										
		Adjacent Collocation - 240V, Single Phase Standby Power Rate per AC Breaker Amp			CLOAC	PE1FD	10.77										
		Adjacent Collocation - 120V, Three Phase Standby Power Rate per AC Breaker Amp			CLOAC	PE1FE	16.15										
		Adjacent Collocation - 277V, Three Phase Standby Power Rate per AC Breaker Amp			CLOAC	PE1FG	37.30										
		Adjacent Collocation - Cable Support Structure per Entrance Cable			CLOAC	PE1PM	18.96										
PHYSICAL COLLOCATION IN THE REMOTE SITE																	
		Physical Collocation in the Remote Site - Application Fee			CLORS	PE1RA		617.91		328.81							
		Cabinet Space in the Remote Site per Bay/ Rack			CLORS	PE1RB	219.49										
		Physical Collocation in the Remote Site - Security Access - Key			CLORS	PE1RD		26.30									
		Physical Collocation in the Remote Site - Space Availability Report per Premises Requested			CLORS	PE1SR		232.69									
		Physical Collocation in the Remote Site - Remote Site CLLI Code Request, per CLLI Code Requested			CLORS	PE1RE		75.41									
		Remote Site DLEC Data (BRSDD), per Compact Disk, per CO			CLORS	PE1RR		233.51									
PHYSICAL COLLOCATION IN THE REMOTE SITE - ADJACENT																	
		Remote Site-Adjacent Collocation - AC Power, per breaker amp			CLORS	PE1RS	6.27										
		Remote Site-Adjacent Collocation - Real Estate, per square foot			CLORS	PE1RT	0.134										
		Remote Site-Adjacent Collocation-Application Fee			CLORS	PE1RU		755.62	755.62								
	NOTE: If Security Escort and/or Add'l Engineering Fees become necessary for remote site collocation, the Parties will negotiate appropriate rates.																

COLLOCATION - Georgia														Attachment: 4		Exhibit: D	
CATEGORY		RATE ELEMENTS	Interim	Zone	BCS	USOC	RATES($)					Svc Order Submitted Elec per LSR	Svc Order Submitted Manually per LSR	Incremental Charge - Manual Svc Order vs. Electronic-1st	Incremental Charge - Manual Svc Order vs. Electronic-Add'l	Incremental Charge - Manual Svc Order vs. Electronic-Disc 1st	Incremental Charge - Manual Svc Order vs. Electronic-Disc Add'l
							Recurring	Nonrecurring		Nonrecurring Disconnect		OSS Rates($)					
								First	Add'l	First	Add'l	SOMEC	SOMAN	SOMAN	SOMAN	SOMAN	SOMAN
PHYSICAL COLLOCATION																	
		Physical Collocation - Application Fee - Initial			CLO	PE1BA		3,850.00									
		Physical Collocation - Application Fee - Subsequent			CLO	PE1CA		3,130.00	3,130.00								
		Physical Collocation Reduced Rate - Application Fee - Subsequent			CLO	PE1BL		740.83									
		Physical Collocation - Space Preparation Fee Per Square Ft.			CLO	PE1SS		100.00	100.00								
		Physical Collocation - Space Preparation - Firm Order Processing	I		CLO	PE1SJ		1,187.00									
		Physical Collocation - Space Preparation - C.O. Modification per square ft.	I		CLO	PE1SK	2.02										
		Physical Collocation - Space Preparation - Common Systems Modification per square ft. - Cageless	I		CLO	PE1SL	2.80										
		Physical Collocation - Space Preparation - Common Systems Modification per Cage	I		CLO	PE1SM	95.23										
		Physical Collocation - Cable Installation			CLO	PE1BD		2,750.00	2,750.00								
		Physical Collocation - Floor Space per Sq. Ft.			CLO	PE1PJ	7.50										
		Physical Collocation - Floor Space - Zone B per Sq. Ft.			CLO	PE1PK	6.75										
		Physical Collocation - Cable Support Structure			CLO	PE1PM	13.35										
		Physical Collocation - Power -48V DC Power, per Fused Amp	I		CLO	PE1PL	8.06										
		Physical Collocation - Power Reduction, Application Fee	I		CLO	PE1PR		398.80									
		Physical Collocation - 120V, Single Phase Standby Power Rate	I		CLO	PE1FB	5.52										
		Physical Collocation - 240V, Single Phase Standby Power Rate	I		CLO	PE1FD	11.05										
		Physical Collocation - 120V, Three Phase Standby Power Rate	I		CLO	PE1FE	16.58										
		Physical Collocation - 277V, Three Phase Standby Power Rate	I		CLO	PE1FG	38.27										
		Physical Collocation - 2-Wire Cross-Connects			UEANL,UEA,UDN,UDC,UAL,UHL,UCL,UEQ, UDL, UNCVX, UNLDX, UNCNX	PE1P2	0.30	12.60	12.60								
		Physical Collocation - 4-Wire Cross-Connects			CLO, UAL, UDL, UDN, UEA, UHL, UNCVX, UNCDX, UCL	PE1P4	0.50	12.60	12.60								
		Physical Collocation - DS1 Cross-Connects			CLO,UEANL,UEQ,WDS1L,WDS1S, USL, U1TD1, UXTD1, UNC1X, ULDD1, USLEL, UNLD1, UDL	PE1P1	8.00	155.00	27.00								
		Physical Collocation - DS3 Cross-Connects			CLO, UE3,U1TD3, UXTD3, UXTS1, UNC3X, UNCSX, ULDD3, U1TS1,ULDS1, UNLD3, UDL	PE1P3	72.00	155.00	27.00								
		Physical Collocation - 2-Fiber Cross-Connect			CLO, ULDO3, ULD12, ULD48, U1TO3, U1T12, U1T48, UDLO3, UDL12, UDF	PE1F2	2.86	52.14	38.72								

COLLOCATION - Georgia														Attachment: 4		Exhibit: D	
CATEGORY		RATE ELEMENTS	Interim	Zone	BCS	USOC	RATES($)					Svc Order Submitted Elec per LSR	Svc Order Submitted Manually per LSR	Incremental Charge - Manual Svc Order vs. Electronic-1st	Incremental Charge - Manual Svc Order vs. Electronic-Add'l	Incremental Charge - Manual Svc Order vs. Electronic-Disc 1st	Incremental Charge - Manual Svc Order vs. Electronic-Disc Add'l
							Recurring	Nonrecurring		Nonrecurring Disconnect		OSS Rates($)					
								First	Add'l	First	Add'l	SOMEC	SOMAN	SOMAN	SOMAN	SOMAN	SOMAN
		Physical Collocation - 4-Fiber Cross-Connect			CLO, ULDO3, ULD12, ULD48, U1TO3, U1T12, U1T48, UDLO3, UDL12, UDF	PE1F4	5.08	64.74	51.31								
		Physical Collocation - Welded Wire Cage - First 100 Sq. Ft.	I		CLO	PE1BW	161.27										
		Physical Collocation - Welded Wire Cage - Add'l 50 Sq. Ft.	I		CLO	PE1CW	15.82										
		Physical Collocation - Security System Per Central Office Per Assignable Sq. Ft.			CLO	PE1AY	0.0172										
		Physical Collocation - Security Access System - New Access Card Activation, per Card			CLO	PE1A1	0.0607	46.20	46.20								
		Physical Collocation - Security Access System - New Access Card Deactivation, per Card			CLO	PE1A4		8.72	8.72								
		Physical Collocation-Security Access System-Administrative Change, existing Access Card, per Card			CLO	PE1AA		15.40	15.40								
		Physical Collocation - Security Access System - Replace Lost or Stolen Card, per Card			CLO	PE1AR		45.02	45.02								
		Physical Collocation - Security Access - Initial Key, per Key			CLO	PE1AK		26.16	26.16								
		Physical Collocation - Security Access - Key, Replace Lost or Stolen Key, per Key			CLO	PE1AL		26.16	26.16								
		Physical Collocation - Space Availability Report per premises	I		CLO	PE1SR		2,148.00	2,148.00								
		POT Bay Arrangements prior to 6/1/99 - 2-Wire Cross-Connect, per cross-connect			UEANL,UEA,UDN,UDC,UAL,UHL,UCL,UEQ,CLO,UDL, UNCVX, UNCDX, UNCNX	PE1PE	0.40										
		POT Bay Arrangements prior to 6/1/99 - 4-Wire Cross-Connect, per cross-connect			UEANL,UEA,UDN,UDC,UAL,UHL,UCL,UEQ,CLO, USL, UNCVX, UNCDX	PE1PF	1.20										
		POT Bay Arrangements prior to 6/1/99 - DS1 Cross-Connect, per cross-connect			UEANL,UEA,UDN,UDC,UAL,UHL,UCL,UEQ,CLO,WDS1L,WDS1S, USL, U1TD1, UXTD1, UNC1X, ULDD1, USLEL, UNLD1	PE1PG	1.20										
		POT Bay Arrangements prior to 6/1/99 - DS3 Cross-Connect, per cross-connect			UEANL,UEA,UDN,UDC,UAL,UHL,UCL,UEQ,CLO,UE3, U1TD3, UXTD3, UXTS1, UNC3X, UNCSX, ULDD3, U1TS1, ULDS1, UNLD3, UDL, UDLSX	PE1PH	8.00										
		POT Bay Arrangements prior to 6/1/99 - 2-Fiber Cross-Connect, per cross-connect			UEANL,UEA,UDN,UDC,UAL,UHL,UCL,UEQ,CLO, ULDO3, ULD12, ULD48, U1TO3, U1T12, U1T48, UDLO3, UDL12, UDF	PE1B2	38.79										

COLLOCATION - Georgia														Attachment: 4		Exhibit: D	
CATEGORY		RATE ELEMENTS	Interim	Zone	BCS	USOC	RATES($)					Svc Order Submitted Elec per LSR	Svc Order Submitted Manually per LSR	Incremental Charge - Manual Svc Order vs. Electronic-1st	Incremental Charge - Manual Svc Order vs. Electronic-Add'l	Incremental Charge - Manual Svc Order vs. Electronic-Disc 1st	Incremental Charge - Manual Svc Order vs. Electronic-Disc Add'l
							Recurring	Nonrecurring		Nonrecurring Disconnect		OSS Rates($)					
								First	Add'l	First	Add'l	SOMEC	SOMAN	SOMAN	SOMAN	SOMAN	SOMAN
		POT Bay Arrangements prior to 6/1/99 - 4-Fiber Cross-Connect, per cross-connect			UEANL,UEA,UDN,UDC,UAL,UHL,UCL,UEQ,CLO, ULDO3, ULD12, ULD48, U1TO3, U1T12, U1T48, UDLO3, UDL12, UDF	PE1B4	52.31										
		Physical Collocation - Request Resend of CFA Information, per CLLI			CLO	PE1C9		77.42									
		Collocation Cable Records - per request			CLO	PE1CR		1,706.00									
		Collocation Cable Records - VG/DS0 Cable, per cable record			CLO	PE1CD		922.38									
		Collocation Cable Records - VG/DS0 Cable, per each 100 pair			CLO	PE1CO		18.00	18.00								
		Collocation Cable Records - DS1, per T1TIE			CLO	PE1C1		8.43	8.43								
		Collocation Cable Records - DS3, per T3TIE			CLO	PE1C3		29.49	29.49								
		Collocation Cable Records - Fiber Cable, per 99 fiber records			CLO	PE1CB		278.61	278.61								
		Physical Collocation - Security Escort - Basic, per Half Hour			CLO,CLORS	PE1BT		41.00	25.00								
		Physical Collocation - Security Escort - Overtime, per Half Hour			CLO,CLORS	PE1OT		48.00	30.00								
		Physical Collocation - Security Escort - Premium, per Half Hour			CLO,CLORS	PE1PT		55.00	35.00								
		V to P Conversion, Per Customer Request-Voice Grade			CLO	PE1BV	33.00										
		V to P Conversion, Per Customer Request-DS0			CLO	PE1BO	33.00										
		V to P Conversion, Per Customer Request-DS1			CLO	PE1B1	52.00										
		V to P Conversion, Per Customer request-DS3			CLO	PE1B3	52.00										
		V to P Conversion, Per Customer Request per VG Circuit Reconfigured			CLO	PE1BR	23.00										
		V to P Conversion, Per Customer Request per DS0 Circuit Reconfigured			CLO	PE1BP	23.00										
		V to P Conversion, Per Customer Request per DS1 Circuit Reconfigured			CLO	PE1BS	33.00										
		V to P Conversion, Per Customer Request per DS3 Circuit Reconfigured			CLO	PE1BE	37.00										
		V to P Conversion, Cable Pairs Assigned to Collo Space per 700 prs or fraction thereof			CLO	PE1B7	592.00										
		Physical Collocation - Co-Carrier Cross Connects - Fiber Cable Support Structure, per cable, per linear ft.			CLO,UDF	PE1ES	0.001										
		Physical Collocation - Co-Carrier Cross Connects - Copper/Coax Cable Support Structure, per cable, per lin. ft.			CLO, UE3, USL	PE1DS	0.0015										
		Physical Collocation - Co-Carrier Cross Connects - Application Fee, per application			CLO	PE1DT		583.18									
ADJACENT COLLOCATION																	
		Adjacent Collocation - Space Charge per Sq. Ft.			CLOAC	PE1JA	0.2542										
		Adjacent Collocation - Electrical Facility Charge per Linear Ft.			CLOAC	PE1JC	5.44										
		Adjacent Collocation - 2-Wire Cross-Connects			CLOAC	PE1P2	0.598	24.95	23.97	11.80	10.67						
		Adjacent Collocation - 4-Wire Cross-Connects			UEA,UHL,UDL,UCL, CLOAC	PE1P4	0.1196	25.14	24.11	12.15	10.93						
		Adjacent Collocation - DS1 Cross-Connects			USL,CLOAC	PE1P1	1.04	44.19	32.13	11.93	10.81						
		Adjacent Collocation - DS3 Cross-Connects			CLOAC	PE1P3	14.12	41.93	30.69	13.71	11.04						
		Adjacent Collocation - 2-Fiber Cross-Connect			CLOAC	PE1F2	2.39	41.93	30.69	13.71	11.05						
		Adjacent Collocation - 4-Fiber Cross-Connect			CLOAC	PE1F4	4.57	51.14	39.90	17.96	15.29						
		Adjacent Collocation - Application Fee			CLOAC	PE1JB		1,555.00									
		Adjacent Collocation - 120V, Single Phase Standby Power Rate per AC Breaker Amp			CLOAC	PE1FB	5.39										
		Adjacent Collocation - 240V, Single Phase Standby Power Rate per AC Breaker Amp			CLOAC	PE1FD	10.79										
		Adjacent Collocation - 120V, Three Phase Standby Power Rate per AC Breaker Amp			CLOAC	PE1FE	16.18										

COLLOCATION - Georgia														Attachment: 4		Exhibit: D	
CATEGORY		RATE ELEMENTS	Interim	Zone	BCS	USOC	RATES($)					Svc Order Submitted Elec per LSR	Svc Order Submitted Manually per LSR	Incremental Charge - Manual Svc Order vs. Electronic-1st	Incremental Charge - Manual Svc Order vs. Electronic-Add'l	Incremental Charge - Manual Svc Order vs. Electronic-Disc 1st	Incremental Charge - Manual Svc Order vs. Electronic-Disc Add'l
							Recurring	Nonrecurring		Nonrecurring Disconnect		OSS Rates($)					
								First	Add'l	First	Add'l	SOMEC	SOMAN	SOMAN	SOMAN	SOMAN	SOMAN
		Adjacent Collocation - 277V, Three Phase Standby Power Rate per AC Breaker Amp			CLOAC	PE1FG	38.27										
		Adjacent Collocation - 240V, Three Phase Standby Power Rate per AC Breaker Amp			CLOAC	PEIJD	37.37										
PHYSICAL COLLOCATION IN THE REMOTE SITE																	
		Physical Collocation in the Remote Site - Application Fee			CLORS	PE1RA		608.18	608.17	323.63	323.63						
		Cabinet Space in the Remote Site per Bay/ Rack			CLORS	PE1RB	224.82										
		Physical Collocation in the Remote Site - Security Access - Key			CLORS	PE1RD		25.88	25.88								
		Physical Collocation in the Remote Site - Space Availability Report per Premises Requested			CLORS	PE1SR		229.02	229.02								
		Physical Collocation in the Remote Site - Remote Site CLLI Code Request, per CLLI Code Requested			CLORS	PE1RE		74.22	74.22								
		Remote Site DLEC Data (BRSDD), per Compact Disk, per CO			CLORS	PE1RR		232.88									
PHYSICAL COLLOCATION IN THE REMOTE SITE - ADJACENT																	
		Remote Site-Adjacent Collocation - AC Power, per breaker amp			CLORS	PE1RS	6.27										
		Remote Site-Adjacent Collocation - Real Estate, per square foot			CLORS	PE1RT	0.134										
		Remote Site-Adjacent Collocation-Application Fee			CLORS	PE1RU		755.62	755.62								
	NOTE: If Security Escort and/or Add'l Engineering Fees become necessary for remote site collocation, the Parties will negotiate appropriate rates.																

COLLOCATION - Kentucky

Attachment: 4 | Exhibit: D

CATEGORY	RATE ELEMENTS	Interim	Zone	BCS	USOC	RATES($) Recurring	Nonrecurring First	Nonrecurring Add'l	Nonrecurring Disconnect First	Nonrecurring Disconnect Add'l	Svc Order Submitted Elec per LSR	Svc Order Submitted Manually per LSR	Incremental Charge - Manual Svc Order vs. Electronic-1st	Incremental Charge - Manual Svc Order vs. Electronic-Add'l	Incremental Charge - Manual Svc Order vs. Electronic-Disc 1st	Incremental Charge - Manual Svc Order vs. Electronic-Disc Add'l
											OSS Rates($)					
											SOMEC	SOMAN	SOMAN	SOMAN	SOMAN	SOMAN
PHYSICAL COLLOCATION																
	Physical Collocation - Application Fee - Initial			CLO	PE1BA		3,773.54	3,773.54	1.01	1.01						
	Physical Collocation - Application Fee - Subsequent			CLO	PE1CA		3,145.35	3,145.35	1.01	1.01						
	Physical Collocation Reduced Rate - Application Fee - Subsequent			CLO	PE1BL		742.12									
	Physical Collocation - Space Preparation - Firm Order Processing			CLO	PE1SJ		1,206.07	1,206.07								
	Physical Collocation - Space Preparation - C.O. Modification per square ft.			CLO	PE1SK	2.32										
	Physical Collocation - Space Preparation - Common Systems Modification per square ft. - Cageless			CLO	PE1SL	3.26										
	Physical Collocation - Space Preparation - Common Systems Modification per Cage			CLO	PE1SM	110.57										
	Physical Collocation - Cable Installation			CLO	PE1BD		1,729.11		45.16							
	Physical Collocation - Floor Space per Sq. Ft.			CLO	PE1PJ	7.99										
	Physical Collocation - Cable Support Structure			CLO	PE1PM	19.86										
	Physical Collocation - Power -48V DC Power, per Fused Amp			CLO	PE1PL	8.06										
	Physical Collocation - Power Reduction, Application Fee	I		CLO	PE1PR		399.50									
	Physical Collocation - 120V, Single Phase Standby Power Rate			CLO	PE1FB	5.44										
	Physical Collocation - 240V, Single Phase Standby Power Rate			CLO	PE1FD	10.88										
	Physical Collocation - 120V, Three Phase Standby Power Rate			CLO	PE1FE	16.32										
	Physical Collocation - 277V, Three Phase Standby Power Rate			CLO	PE1FG	37.68										
	Physical Collocation - 2-Wire Cross-Connects			UEANL,UEA,UDN,UDC,UAL,UHL,UCL,UEQ, UDL, UNCVX, UNLDX, UNCNX	PE1P2	0.0333	24.68	23.68	12.14	10.95						
	Physical Collocation - 4-Wire Cross-Connects			CLO, UAL, UDL, UDN, UEA, UHL, UNCVX, UNCDX, UCL	PE1P4	0.0665	24.88	23.82	12.77	11.46						
	Physical Collocation - DS1 Cross-Connects			CLO,UEANL,UEQ,WDS1L,WDS1S, USL, U1TD1, UXTD1, UNC1X, ULDD1, USLEL, UNLD1, UDL	PE1P1	1.48	44.23	31.98	12.81	11.57						
	Physical Collocation - DS3 Cross-Connects			CLO, UE3,U1TD3, UXTD3, UXTS1, UNC3X, UNCSX, ULDD3, U1TS1,ULDS1, UNLD3, UDL	PE1P3	18.89	41.93	30.51	14.75	11.83						
	Physical Collocation - 2-Fiber Cross-Connect			CLO, ULDO3, ULD12, ULD48, U1TO3, U1T12, U1T48, UDLO3, UDL12, UDF	PE1F2	3.75	41.93	30.51	14.76	11.84						
	Physical Collocation - 4-Fiber Cross-Connect			CLO, ULDO3, ULD12, ULD48, U1TO3, U1T12, U1T48, UDLO3, UDL12, UDF	PE1F4	6.65	51.29	39.87	19.41	16.49						
	Physical Collocation - Welded Wire Cage - First 100 Sq. Ft.			CLO	PE1BW	184.97										

COLLOCATION - Kentucky														Attachment: 4		Exhibit: D	
CATEGORY		RATE ELEMENTS	Interim	Zone	BCS	USOC	RATES($)					Svc Order Submitted Elec per LSR	Svc Order Submitted Manually per LSR	Incremental Charge - Manual Svc Order vs. Electronic-1st	Incremental Charge - Manual Svc Order vs. Electronic-Add'l	Incremental Charge - Manual Svc Order vs. Electronic-Disc 1st	Incremental Charge - Manual Svc Order vs. Electronic-Disc Add'l
							Recurring	Nonrecurring		Nonrecurring Disconnect		OSS Rates($)					
								First	Add'l	First	Add'l	SOMEC	SOMAN	SOMAN	SOMAN	SOMAN	SOMAN
		Physical Collocation - Welded Wire Cage - Add'l 50 Sq. Ft.			CLO	PE1CW	18.14										
		Physical Collocation - Security Access System - Security System per Central Office			CLO	PE1AX	76.10										
		Physical Collocation - Security Access System - New Access Card Activation, per Card			CLO	PE1A1	0.058	55.79	55.79								
		Physical Collocation-Security Access System-Administrative Change, existing Access Card, per Card			CLO	PE1AA		15.64	15.64								
		Physical Collocation - Security Access System - Replace Lost or Stolen Card, per Card			CLO	PE1AR		45.74	45.74								
		Physical Collocation - Security Access - Initial Key, per Key			CLO	PE1AK		26.29	26.29								
		Physical Collocation - Security Access - Key, Replace Lost or Stolen Key, per Key			CLO	PE1AL		26.29	26.29								
		Physical Collocation - Space Availability Report per premises			CLO	PE1SR		2,158.67	2,158.67								
		POT Bay Arrangements prior to 6/1/99 - 2-Wire Cross-Connect, per cross-connect			UEANL,UEA,UDN,UDC,UAL,UHL,UCL,UEQ,CLO,UDL, UNCVX, UNCDX, UNCNX	PE1PE	0.113										
		POT Bay Arrangements prior to 6/1/99 - 4-Wire Cross-Connect, per cross-connect			UEANL,UEA,UDN,UDC,UAL,UHL,UCL,UEQ,CLO, USL, UNCVX, UNCDX	PE1PF	0.23										
		POT Bay Arrangements prior to 6/1/99 - DS1 Cross-Connect, per cross-connect			UEANL,UEA,UDN,UDC,UAL,UHL,UCL,UEQ,CLO,WDS1L,WDS1S, USL, U1TD1, UXTD1, UNC1X, ULDD1, USLEL, UNLD1	PE1PG	1.60										
		POT Bay Arrangements prior to 6/1/99 - DS3 Cross-Connect, per cross-connect			UEANL,UEA,UDN,UDC,UAL,UHL,UCL,UEQ,CLO,UE3, U1TD3, UXTD3, UXTS1, UNC3X, UNCSX, ULDD3, U1TS1, ULDS1, UNLD3, UDL, UDLSX	PE1PH	14.23										
		POT Bay Arrangements prior to 6/1/99 - 2-Fiber Cross-Connect, per cross-connect			UEANL,UEA,UDN,UDC,UAL,UHL,UCL,UEQ,CLO, ULDO3, ULD12, ULD48, U1TO3, U1T12, U1T48, UDLO3, UDL12, UDF	PE1B2	48.57										
		POT Bay Arrangements prior to 6/1/99 - 4-Fiber Cross-Connect, per cross-connect			UEANL,UEA,UDN,UDC,UAL,UHL,UCL,UEQ,CLO, ULDO3, ULD12, ULD48, U1TO3, U1T12, U1T48, UDLO3, UDL12, UDF	PE1B4	65.50										
		Physical Collocation - Request Resend of CFA Information, per CLLI			CLO	PE1C9		77.55									
		Collocation Cable Records - per request			CLO	PE1CR		1,524.45	980.01	267.02							
		Collocation Cable Records - VG/DS0 Cable, per cable record			CLO	PE1CD		656.37	656.37	379.70							
		Collocation Cable Records - VG/DS0 Cable, per each 100 pair			CLO	PE1CO		9.65	9.65	11.84	11.84						
		Collocation Cable Records - DS1, per T1TIE			CLO	PE1C1		4.52	4.52	5.54	5.54						

COLLOCATION - Kentucky														Attachment: 4		Exhibit: D	
CATEGORY		RATE ELEMENTS	Interim	Zone	BCS	USOC	RATES($)					Svc Order Submitted Elec per LSR	Svc Order Submitted Manually per LSR	Incremental Charge - Manual Svc Order vs. Electronic-1st	Incremental Charge - Manual Svc Order vs. Electronic-Add'l	Incremental Charge - Manual Svc Order vs. Electronic-Disc 1st	Incremental Charge - Manual Svc Order vs. Electronic-Disc Add'l
							Recurring	Nonrecurring		Nonrecurring Disconnect		OSS Rates($)					
								First	Add'l	First	Add'l	SOMEC	SOMAN	SOMAN	SOMAN	SOMAN	SOMAN
		Collocation Cable Records - DS3, per T3TIE			CLO	PE1C3		15.81	15.81	19.39	19.39						
		Collocation Cable Records - Fiber Cable, per 99 fiber records			CLO	PE1CB		169.63	169.63	154.85	154.85						
		Physical Collocation - Security Escort - Basic, per Half Hour			CLO,CLORS	PE1BT		33.98	21.53								
		Physical Collocation - Security Escort - Overtime, per Half Hour			CLO,CLORS	PE1OT		44.26	27.81								
		Physical Collocation - Security Escort - Premium, per Half Hour			CLO,CLORS	PE1PT		54.54	34.09								
		V to P Conversion, Per Customer Request-Voice Grade			CLO	PE1BV	33.00										
		V to P Conversion, Per Customer Request-DS0			CLO	PE1BO	33.00										
		V to P Conversion, Per Customer Request-DS1			CLO	PE1B1	52.00										
		V to P Conversion, Per Customer request-DS3			CLO	PE1B3	52.00										
		V to P Conversion, Per Customer Request per VG Circuit Reconfigured			CLO	PE1BR	23.00										
		V to P Conversion, Per Customer Request per DS0 Circuit Reconfigured			CLO	PE1BP	23.00										
		V to P Conversion, Per Customer Request per DS1 Circuit Reconfigured			CLO	PE1BS	33.00										
		V to P Conversion, Per Customer Request per DS3 Circuit Reconfigured			CLO	PE1BE	37.00										
		V to P Conversion, Cable Pairs Assigned to Collo Space per 700 prs or fraction thereof			CLO	PE1B7	592.00										
		Physical Collocation - Co-Carrier Cross Connects - Fiber Cable Support Structure, per cable, per linear ft.			CLO,UDF	PE1ES	0.0012										
		Physical Collocation - Co-Carrier Cross Connects - Copper/Coax Cable Support Structure, per cable, per lin. ft.			CLO, UE3, USL	PE1DS	0.0018										
		Physical Collocation - Co-Carrier Cross Connects - Application Fee, per application			CLO	PE1DT		584.20									
ADJACENT COLLOCATION																	
		Adjacent Collocation - Space Charge per Sq. Ft.			CLOAC	PE1JA	0.0173										
		Adjacent Collocation - Electrical Facility Charge per Linear Ft.			CLOAC	PE1JC	5.35										
		Adjacent Collocation - 2-Wire Cross-Connects			CLOAC	PE1P2	0.0258	24.68	23.68	12.14	10.95						
		Adjacent Collocation - 4-Wire Cross-Connects			UEA,UHL,UDL,UCL, CLOAC	PE1P4	0.0515	24.88	23.82	12.77	11.46						
		Adjacent Collocation - DS1 Cross-Connects			USL,CLOAC	PE1P1	1.37	44.23	31.98	12.81	11.57						
		Adjacent Collocation - DS3 Cross-Connects			CLOAC	PE1P3	18.61	41.93	30.51	14.75	11.83						
		Adjacent Collocation - 2-Fiber Cross-Connect			CLOAC	PE1F2	3.15	41.93	30.51	14.76	11.84						
		Adjacent Collocation - 4-Fiber Cross-Connect			CLOAC	PE1F4	6.02	51.29	39.87	19.41	16.49						
		Adjacent Collocation - Application Fee			CLOAC	PE1JB		3,165.50		1.01							
		Adjacent Collocation - 120V, Single Phase Standby Power Rate per AC Breaker Amp			CLOAC	PE1FB	5.44										
		Adjacent Collocation - 240V, Single Phase Standby Power Rate per AC Breaker Amp			CLOAC	PE1FD	10.88										
		Adjacent Collocation - 120V, Three Phase Standby Power Rate per AC Breaker Amp			CLOAC	PE1FE	16.32										
		Adjacent Collocation - 277V, Three Phase Standby Power Rate per AC Breaker Amp			CLOAC	PE1FG	37.68										
PHYSICAL COLLOCATION IN THE REMOTE SITE																	
		Physical Collocation in the Remote Site - Application Fee			CLORS	PE1RA		617.78		338.89							
		Cabinet Space in the Remote Site per Bay/ Rack			CLORS	PE1RB	219.67										
		Physical Collocation in the Remote Site - Security Access - Key			CLORS	PE1RD		26.29									
		Physical Collocation in the Remote Site - Space Availability Report per Premises Requested			CLORS	PE1SR		232.64									
		Physical Collocation in the Remote Site - Remote Site CLLI Code Request, per CLLI Code Requested			CLORS	PE1RE		75.40									
		Remote Site DLEC Data (BRSDD), per Compact Disk, per CO			CLORS	PE1RR		233.42									
PHYSICAL COLLOCATION IN THE REMOTE SITE - ADJACENT																	
		Remote Site-Adjacent Collocation - AC Power, per breaker amp			CLORS	PE1RS	6.27										

COLLOCATION - Kentucky														Attachment: 4		Exhibit: D	
CATEGORY		RATE ELEMENTS	Interim	Zone	BCS	USOC	RATES($)					Svc Order Submitted Elec per LSR	Svc Order Submitted Manually per LSR	Incremental Charge - Manual Svc Order vs. Electronic-1st	Incremental Charge - Manual Svc Order vs. Electronic-Add'l	Incremental Charge - Manual Svc Order vs. Electronic-Disc 1st	Incremental Charge - Manual Svc Order vs. Electronic-Disc Add'l
							Recurring	Nonrecurring		Nonrecurring Disconnect		OSS Rates($)					
								First	Add'l	First	Add'l	SOMEC	SOMAN	SOMAN	SOMAN	SOMAN	SOMAN
		Remote Site-Adjacent Collocation - Real Estate, per square foot			CLORS	PE1RT	0.134										
		Remote Site-Adjacent Collocation-Application Fee			CLORS	PE1RU		755.62	755.62								
	NOTE: If Security Escort and/or Add'l Engineering Fees become necessary for remote site collocation, the Parties will negotiate appropriate rates.																

COLLOCATION - Louisiana														Attachment: 4		Exhibit: D	
CATEGORY		RATE ELEMENTS	Interim	Zone	BCS	USOC	RATES($)					Svc Order Submitted Elec per LSR	Svc Order Submitted Manually per LSR	Incremental Charge - Manual Svc Order vs. Electronic-1st	Incremental Charge - Manual Svc Order vs. Electronic-Add'l	Incremental Charge - Manual Svc Order vs. Electronic-Disc 1st	Incremental Charge - Manual Svc Order vs. Electronic-Disc Add'l
							Recurring	Nonrecurring		Nonrecurring Disconnect		OSS Rates($)					
								First	Add'l	First	Add'l	SOMEC	SOMAN	SOMAN	SOMAN	SOMAN	SOMAN
PHYSICAL COLLOCATION																	
		Physical Collocation - Application Fee - Initial			CLO	PE1BA		1,837.24									
		Physical Collocation - Application Fee - Subsequent			CLO	PE1CA		1,533.41									
		Physical Collocation Reduced Rate - Application Fee - Subsequent			CLO	PE1BL		741.97									
		Physical Collocation - Space Preparation - Firm Order Processing			CLO	PE1SJ		583.33									
		Physical Collocation - Space Preparation - C.O. Modification per square ft.			CLO	PE1SK	2.31										
		Physical Collocation - Space Preparation - Common Systems Modification per square ft. - Cageless			CLO	PE1SL	2.70										
		Physical Collocation - Space Preparation - Common Systems Modification per Cage			CLO	PE1SM	91.60										
		Physical Collocation - Cable Installation			CLO	PE1BD		841.54	841.54								
		Physical Collocation - Floor Space per Sq. Ft.			CLO	PE1PJ	5.30										
		Physical Collocation - Cable Support Structure			CLO	PE1PM	18.31										
		Physical Collocation - Power -48V DC Power, per Fused Amp	I		CLO	PE1PL	8.32										
		Physical Collocation - Power Reduction, Application Fee	I		CLO	PE1PR		398.88									
		Physical Collocation - 120V, Single Phase Standby Power Rate			CLO	PE1FB	5.45										
		Physical Collocation - 240V, Single Phase Standby Power Rate			CLO	PE1FD	10.92										
		Physical Collocation - 120V, Three Phase Standby Power Rate			CLO	PE1FE	16.37										
		Physical Collocation - 277V, Three Phase Standby Power Rate			CLO	PE1FG	37.80										
		Physical Collocation - 2-Wire Cross-Connects			UEANL,UEA,UDN,UDC,UAL,UHL,UCL,UEQ, UDL, UNCVX, UNLDX, UNCNX	PE1P2	0.0318	11.94	11.46								
		Physical Collocation - 4-Wire Cross-Connects			CLO, UAL, UDL, UDN, UEA, UHL, UNCVX, UNCDX, UCL	PE1P4	0.0636	12.04	11.53								
		Physical Collocation - DS1 Cross-Connects			CLO,UEANL,UEQ,WDS1L,WDS1S, USL, U1TD1, UXTD1, UNC1X, ULDD1, USLEL, UNLD1, UDL	PE1P1	1.04	21.39	15.47								
		Physical Collocation - DS3 Cross-Connects			CLO, UE3,U1TD3, UXTD3, UXTS1, UNC3X, UNCSX, ULDD3, U1TS1,ULDS1, UNLD3, UDL	PE1P3	13.21	20.28	14.76								
		Physical Collocation - 2-Fiber Cross-Connect			CLO, ULDO3, ULD12, ULD48, U1TO3, U1T12, U1T48, UDLO3, UDL12, UDF	PE1F2	2.62	20.28	14.76								
		Physical Collocation - 4-Fiber Cross-Connect			CLO, ULDO3, ULD12, ULD48, U1TO3, U1T12, U1T48, UDLO3, UDL12, UDF	PE1F4	4.65	24.81	19.29								
		Physical Collocation - Welded Wire Cage - First 100 Sq. Ft.			CLO	PE1BW	184.50										

COLLOCATION - Louisiana														Attachment: 4		Exhibit: D	
CATEGORY		RATE ELEMENTS	Interim	Zone	BCS	USOC	RATES($)					Svc Order Submitted Elec per LSR	Svc Order Submitted Manually per LSR	Incremental Charge - Manual Svc Order vs. Electronic-1st	Incremental Charge - Manual Svc Order vs. Electronic-Add'l	Incremental Charge - Manual Svc Order vs. Electronic-Disc 1st	Incremental Charge - Manual Svc Order vs. Electronic-Disc Add'l
							Recurring	Nonrecurring		Nonrecurring Disconnect		OSS Rates($)					
								First	Add'l	First	Add'l	SOMEC	SOMAN	SOMAN	SOMAN	SOMAN	SOMAN
		Physical Collocation - Welded Wire Cage - Add'l 50 Sq. Ft.			CLO	PE1CW	18.10										
		Physical Collocation - Security System Per Central Office Per Assignable Sq. Ft.			CLO	PE1AY	0.0224										
		Physical Collocation - Security Access System - New Access Card Activation, per Card			CLO	PE1A1	0.0579	27.50									
		Physical Collocation-Security Access System-Administrative Change, existing Access Card, per Card			CLO	PE1AA		7.74	7.74								
		Physical Collocation - Security Access System - Replace Lost or Stolen Card, per Card			CLO	PE1AR		22.64	22.64								
		Physical Collocation - Security Access - Initial Key, per Key			CLO	PE1AK		13.01	13.01								
		Physical Collocation - Security Access - Key, Replace Lost or Stolen Key, per Key			CLO	PE1AL		13.01	13.01								
		Physical Collocation - Space Availability Report per premises			CLO	PE1SR		1,044.07	1,044.07								
		POT Bay Arrangements prior to 6/1/99 - 2-Wire Cross-Connect, per cross-connect			UEANL,UEA,UDN,UDC,UAL,UHL,UCL,UEQ,CLO,UDL, UNCVX, UNCDX, UNCNX	PE1PE	0.079										
		POT Bay Arrangements prior to 6/1/99 - 4-Wire Cross-Connect, per cross-connect			UEANL,UEA,UDN,UDC,UAL,UHL,UCL,UEQ,CLO, USL, UNCVX, UNCDX	PE1PF	0.158										
		POT Bay Arrangements prior to 6/1/99 - DS1 Cross-Connect, per cross-connect			UEANL,UEA,UDN,UDC,UAL,UHL,UCL,UEQ,CLO,WDS1L,WDS1S, USL, U1TD1, UXTD1, UNC1X, ULDD1, USLEL, UNLD1	PE1PG	1.12										
		POT Bay Arrangements prior to 6/1/99 - DS3 Cross-Connect, per cross-connect			UEANL,UEA,UDN,UDC,UAL,UHL,UCL,UEQ,CLO,UE3, U1TD3, UXTD3, UXTS1, UNC3X, UNCSX, ULDD3, U1TS1, ULDS1, UNLD3, UDL, UDLSX	PE1PH	9.95										
		POT Bay Arrangements prior to 6/1/99 - 2-Fiber Cross-Connect, per cross-connect			UEANL,UEA,UDN,UDC,UAL,UHL,UCL,UEQ,CLO, ULDO3, ULD12, ULD48, U1TO3, U1T12, U1T48, UDLO3, UDL12, UDF	PE1B2	33.96										
		POT Bay Arrangements prior to 6/1/99 - 4-Fiber Cross-Connect, per cross-connect			UEANL,UEA,UDN,UDC,UAL,UHL,UCL,UEQ,CLO, ULDO3, ULD12, ULD48, U1TO3, U1T12, U1T48, UDLO3, UDL12, UDF	PE1B4	45.80										
		Physical Collocation - Request Resend of CFA Information, per CLLI			CLO	PE1C9		77.43									
		Collocation Cable Records - per request			CLO	PE1CR	10.97										
		Collocation Cable Records - VG/DS0 Cable, per cable record			CLO	PE1CD	5.29										
		Collocation Cable Records - VG/DS0 Cable, per each 100 pair			CLO	PE1CO	0.08										
		Collocation Cable Records - DS1, per T1TIE			CLO	PE1C1	0.04										

COLLOCATION - Louisiana														Attachment: 4		Exhibit: D	
CATEGORY		RATE ELEMENTS	Interim	Zone	BCS	USOC	RATES($)					Svc Order Submitted Elec per LSR	Svc Order Submitted Manually per LSR	Incremental Charge - Manual Svc Order vs. Electronic-1st	Incremental Charge - Manual Svc Order vs. Electronic-Add'l	Incremental Charge - Manual Svc Order vs. Electronic-Disc 1st	Incremental Charge - Manual Svc Order vs. Electronic-Disc Add'l
							Recurring	Nonrecurring		Nonrecurring Disconnect		OSS Rates($)					
								First	Add'l	First	Add'l	SOMEC	SOMAN	SOMAN	SOMAN	SOMAN	SOMAN
		Collocation Cable Records - DS3, per T3TIE			CLO	PE1C3	0.13										
		Collocation Cable Records - Fiber Cable, per 99 fiber records			CLO	PE1CB	1.37										
		Physical Collocation - Security Escort - Basic, per Half Hour			CLO,CLORS	PE1BT		16.44	10.42								
		Physical Collocation - Security Escort - Overtime, per Half Hour			CLO,CLORS	PE1OT		21.41	13.45								
		Physical Collocation - Security Escort - Premium, per Half Hour			CLO,CLORS	PE1PT		26.38	16.49								
		V to P Conversion, Per Customer Request-Voice Grade			CLO	PE1BV	33.00										
		V to P Conversion, Per Customer Request-DS0			CLO	PE1BO	33.00										
		V to P Conversion, Per Customer Request-DS1			CLO	PE1B1	52.00										
		V to P Conversion, Per Customer request-DS3			CLO	PE1B3	52.00										
		V to P Conversion, Per Customer Request per VG Circuit Reconfigured			CLO	PE1BR	23.00										
		V to P Conversion, Per Customer Request per DS0 Circuit Reconfigured			CLO	PE1BP	23.00										
		V to P Conversion, Per Customer Request per DS1 Circuit Reconfigured			CLO	PE1BS	33.00										
		V to P Conversion, Per Customer Request per DS3 Circuit Reconfigured			CLO	PE1BE	37.00										
		V to P Conversion, Cable Pairs Assigned to Collo Space per 700 prs or fraction thereof			CLO	PE1B7	592.00										
		Physical Collocation - Co-Carrier Cross Connects - Fiber Cable Support Structure, per cable, per linear ft.			CLO,UDF	PE1ES	0.001										
		Physical Collocation - Co-Carrier Cross Connects - Copper/Coax Cable Support Structure, per cable, per lin. ft.			CLO, UE3, USL	PE1DS	0.0015										
		Physical Collocation - Co-Carrier Cross Connects - Application Fee, per application			CLO	PE1DT		583.30									
ADJACENT COLLOCATION																	
		Adjacent Collocation - Space Charge per Sq. Ft.			CLOAC	PE1JA	0.0552										
		Adjacent Collocation - Electrical Facility Charge per Linear Ft.			CLOAC	PE1JC	5.61										
		Adjacent Collocation - 2-Wire Cross-Connects			CLOAC	PE1P2	0.0245	11.94	11.46								
		Adjacent Collocation - 4-Wire Cross-Connects			UEA,UHL,UDL,UCL, CLOAC	PE1P4	0.0491	12.04	11.53								
		Adjacent Collocation - DS1 Cross-Connects			USL,CLOAC	PE1P1	0.9605	21.39	15.47								
		Adjacent Collocation - DS3 Cross-Connects			CLOAC	PE1P3	13.01	20.28	14.76								
		Adjacent Collocation - 2-Fiber Cross-Connect			CLOAC	PE1F2	2.20	20.28	14.76								
		Adjacent Collocation - 4-Fiber Cross-Connect			CLOAC	PE1F4	4.21	24.81	19.29								
		Adjacent Collocation - Application Fee			CLOAC	PE1JB		1,543.20									
		Adjacent Collocation - 120V, Single Phase Standby Power Rate per AC Breaker Amp			CLOAC	PE1FB	5.45										
		Adjacent Collocation - 240V, Single Phase Standby Power Rate per AC Breaker Amp			CLOAC	PE1FD	10.92										
		Adjacent Collocation - 120V, Three Phase Standby Power Rate per AC Breaker Amp			CLOAC	PE1FE	16.37										
		Adjacent Collocation - 277V, Three Phase Standby Power Rate per AC Breaker Amp			CLOAC	PE1FG	37.80										
PHYSICAL COLLOCATION IN THE REMOTE SITE																	
		Physical Collocation in the Remote Site - Application Fee			CLORS	PE1RA		298.80	298.80								
		Cabinet Space in the Remote Site per Bay/ Rack			CLORS	PE1RB	225.39										
		Physical Collocation in the Remote Site - Security Access - Key			CLORS	PE1RD		13.01	13.01								
		Physical Collocation in the Remote Site - Space Availability Report per Premises Requested			CLORS	PE1SR		112.52	112.52								
		Physical Collocation in the Remote Site - Remote Site CLLI Code Request, per CLLI Code Requested			CLORS	PE1RE		36.47	36.47								
		Remote Site DLEC Data (BRSDD), per Compact Disk, per CO			CLORS	PE1RR		233.21									
PHYSICAL COLLOCATION IN THE REMOTE SITE - ADJACENT																	
		Remote Site-Adjacent Collocation - AC Power, per breaker amp			CLORS	PE1RS	6.27										

COLLOCATION - Louisiana														Attachment: 4		Exhibit: D	
CATEGORY		RATE ELEMENTS	Interim	Zone	BCS	USOC	RATES($)					Svc Order Submitted Elec per LSR	Svc Order Submitted Manually per LSR	Incremental Charge - Manual Svc Order vs. Electronic-1st	Incremental Charge - Manual Svc Order vs. Electronic-Add'l	Incremental Charge - Manual Svc Order vs. Electronic-Disc 1st	Incremental Charge - Manual Svc Order vs. Electronic-Disc Add'l
							Recurring	Nonrecurring		Nonrecurring Disconnect		OSS Rates($)					
								First	Add'l	First	Add'l	SOMEC	SOMAN	SOMAN	SOMAN	SOMAN	SOMAN
		Remote Site-Adjacent Collocation - Real Estate, per square foot			CLORS	PE1RT	0.134										
		Remote Site-Adjacent Collocation-Application Fee			CLORS	PE1RU		755.62	755.62								
	NOTE: If Security Escort and/or Add'l Engineering Fees become necessary for remote site collocation, the Parties will negotiate appropriate rates.																

COLLOCATION - Mississippi

Attachment: 4 | Exhibit: D

CATEGORY	RATE ELEMENTS	Interim	Zone	BCS	USOC	RATES($) Recurring	Nonrecurring First	Nonrecurring Add'l	Nonrecurring Disconnect First	Nonrecurring Disconnect Add'l	Svc Order Submitted Elec per LSR	Svc Order Submitted Manually per LSR	Incremental Charge - Manual Svc Order vs. Electronic-1st	Incremental Charge - Manual Svc Order vs. Electronic-Add'l	Incremental Charge - Manual Svc Order vs. Electronic-Disc 1st	Incremental Charge - Manual Svc Order vs. Electronic-Disc Add'l
											OSS Rates($)					
											SOMEC	SOMAN	SOMAN	SOMAN	SOMAN	SOMAN
PHYSICAL COLLOCATION																
	Physical Collocation - Application Fee - Initial			CLO	PE1BA		1,890.38		0.051							
	Physical Collocation - Application Fee - Subsequent			CLO	PE1CA		1,575.69		0.51							
	Physical Collocation Reduced Rate - Application Fee - Subsequent			CLO	PE1BL		740.76									
	Physical Collocation - Space Preparation - Firm Order Processing	I		CLO	PE1SJ		604.19									
	Physical Collocation - Space Preparation - C.O. Modification per square ft.	I		CLO	PE1SK	2.30										
	Physical Collocation - Space Preparation - Common Systems Modification per square ft. - Cageless	I		CLO	PE1SL	2.52										
	Physical Collocation - Space Preparation - Common Systems Modification per Cage	I		CLO	PE1SM	85.67										
	Physical Collocation - Cable Installation			CLO	PE1BD		926.27	926.27	22.62							
	Physical Collocation - Floor Space per Sq. Ft.			CLO	PE1PJ	5.74										
	Physical Collocation - Cable Support Structure			CLO	PE1PM	17.42										
	Physical Collocation - Power -48V DC Power, per Fused Amp	I		CLO	PE1PL	7.33										
	Physical Collocation - Power Reduction, Application Fee	I		CLO	PE1PR		398.76									
	Physical Collocation - 120V, Single Phase Standby Power Rate	I		CLO	PE1FB	5.29										
	Physical Collocation - 240V, Single Phase Standby Power Rate	I		CLO	PE1FD	10.58										
	Physical Collocation - 120V, Three Phase Standby Power Rate	I		CLO	PE1FE	15.87										
	Physical Collocation - 277V, Three Phase Standby Power Rate	I		CLO	PE1FG	36.65										
	Physical Collocation - 2-Wire Cross-Connects			UEANL,UEA,UDN,UDC,UAL,UHL,UCL,UEQ, UDL, UNCVX, UNLDX, UNCNX	PE1P2	0.0288	12.37	11.87	6.04	5.45						
	Physical Collocation - 4-Wire Cross-Connects			CLO, UAL, UDL, UDN, UEA, UHL, UNCVX, UNCDX, UCL	PE1P4	0.0576	12.47	11.94	6.59	5.91						
	Physical Collocation - DS1 Cross-Connects			CLO,UEANL,UEQ,WDS1L,WDS1S, USL, U1TD1, UXTD1, UNC1X, ULDD1, USLEL, UNLD1, UDL	PE1P1	1.14	22.16	16.02	6.60	5.97						
	Physical Collocation - DS3 Cross-Connects			CLO, UE3,U1TD3, UXTD3, UXTS1, UNC3X, UNCSX, ULDD3, U1TS1,ULDS1, UNLD3, UDL	PE1P3	14.49	21.01	15.29	7.61	6.10						
	Physical Collocation - 2-Fiber Cross-Connect			CLO, ULDO3, ULD12, ULD48, U1TO3, U1T12, U1T48, UDLO3, UDL12, UDF	PE1F2	2.87	21.01	15.29	7.61	6.10						
	Physical Collocation - 4-Fiber Cross-Connect			CLO, ULDO3, ULD12, ULD48, U1TO3, U1T12, U1T48, UDLO3, UDL12, UDF	PE1F4	5.10	25.70	19.97	10.01	8.50						
	Physical Collocation - Welded Wire Cage - First 100 Sq. Ft.			CLO	PE1BW	183.20										

COLLOCATION - Mississippi														Attachment: 4		Exhibit: D	
CATEGORY		RATE ELEMENTS	Interim	Zone	BCS	USOC	RATES($)					Svc Order Submitted Elec per LSR	Svc Order Submitted Manually per LSR	Incremental Charge - Manual Svc Order vs. Electronic-1st	Incremental Charge - Manual Svc Order vs. Electronic-Add'l	Incremental Charge - Manual Svc Order vs. Electronic-Disc 1st	Incremental Charge - Manual Svc Order vs. Electronic-Disc Add'l
							Recurring	Nonrecurring		Nonrecurring Disconnect		OSS Rates($)					
								First	Add'l	First	Add'l	SOMEC	SOMAN	SOMAN	SOMAN	SOMAN	SOMAN
		Physical Collocation - Welded Wire Cage - Add'l 50 Sq. Ft.			CLO	PE1CW	17.97										
		Physical Collocation - Security Access System - Security System per Central Office	I		CLO	PE1AX	75.23										
		Physical Collocation - Security Access System - New Access Card Activation, per Card	I		CLO	PE1A1	0.0576	27.95	27.95								
		Physical Collocation-Security Access System-Administrative Change, existing Access Card, per Card	I		CLO	PE1AA		7.84	7.84								
		Physical Collocation - Security Access System - Replace Lost or Stolen Card, per Card			CLO	PE1AR		22.91	22.91								
		Physical Collocation - Security Access - Initial Key, per Key			CLO	PE1AK		13.17	13.17								
		Physical Collocation - Security Access - Key, Replace Lost or Stolen Key, per Key			CLO	PE1AL		13.17	13.17								
		Physical Collocation - Space Availability Report per premises	I		CLO	PE1SR		1,081.40	1,081.40								
		POT Bay Arrangements prior to 6/1/99 - 2-Wire Cross-Connect, per cross-connect			UEANL,UEA,UDN,UDC,UAL,UHL,UCL,UEQ,CLO,UDL, UNCVX, UNCDX, UNCNX	PE1PE	0.0867										
		POT Bay Arrangements prior to 6/1/99 - 4-Wire Cross-Connect, per cross-connect			UEANL,UEA,UDN,UDC,UAL,UHL,UCL,UEQ,CLO, USL, UNCVX, UNCDX	PE1PF	0.1734										
		POT Bay Arrangements prior to 6/1/99 - DS1 Cross-Connect, per cross-connect			UEANL,UEA,UDN,UDC,UAL,UHL,UCL,UEQ,CLO,WDS1L,WDS1S, USL, U1TD1, UXTD1, UNC1X, ULDD1, USLEL, UNLD1	PE1PG	1.22										
		POT Bay Arrangements prior to 6/1/99 - DS3 Cross-Connect, per cross-connect			UEANL,UEA,UDN,UDC,UAL,UHL,UCL,UEQ,CLO,UE3, U1TD3, UXTD3, UXTS1, UNC3X, UNCSX, ULDD3, U1TS1, ULDS1, UNLD3, UDL, UDLSX	PE1PH	10.91										
		POT Bay Arrangements prior to 6/1/99 - 2-Fiber Cross-Connect, per cross-connect			UEANL,UEA,UDN,UDC,UAL,UHL,UCL,UEQ,CLO, ULDO3, ULD12, ULD48, U1TO3, U1T12, U1T48, UDLO3, UDL12, UDF	PE1B2	37.26										
		POT Bay Arrangements prior to 6/1/99 - 4-Fiber Cross-Connect, per cross-connect			UEANL,UEA,UDN,UDC,UAL,UHL,UCL,UEQ,CLO, ULDO3, ULD12, ULD48, U1TO3, U1T12, U1T48, UDLO3, UDL12, UDF	PE1B4	50.24										
		Physical Collocation - Request Resend of CFA Information, per CLLI			CLO	PE1C9		77.41									
		Collocation Cable Records - per request			CLO	PE1CR		763.69		133.77							
		Collocation Cable Records - VG/DS0 Cable, per cable record			CLO	PE1CD		328.81		190.22							
		Collocation Cable Records - VG/DS0 Cable, per each 100 pair			CLO	PE1CO		4.84	4.84	5.93	5.93						
		Collocation Cable Records - DS1, per T1TIE			CLO	PE1C1		2.27	2.27	2.78	2.78						

COLLOCATION - Mississippi														Attachment: 4		Exhibit: D	
CATEGORY		RATE ELEMENTS	Interim	Zone	BCS	USOC	RATES($)					Svc Order Submitted Elec per LSR	Svc Order Submitted Manually per LSR	Incremental Charge - Manual Svc Order vs. Electronic-1st	Incremental Charge - Manual Svc Order vs. Electronic-Add'l	Incremental Charge - Manual Svc Order vs. Electronic-Disc 1st	Incremental Charge - Manual Svc Order vs. Electronic-Disc Add'l
							Recurring	Nonrecurring		Nonrecurring Disconnect		OSS Rates($)					
								First	Add'l	First	Add'l	SOMEC	SOMAN	SOMAN	SOMAN	SOMAN	SOMAN
		Collocation Cable Records - DS3, per T3TIE			CLO	PE1C3		7.92	7.92	9.72	9.72						
		Collocation Cable Records - Fiber Cable, per 99 fiber records			CLO	PE1CB		84.98	84.98	77.58	77.58						
		Physical Collocation - Security Escort - Basic, per Half Hour			CLO,CLORS	PE1BT		17.02	10.79								
		Physical Collocation - Security Escort - Overtime, per Half Hour			CLO,CLORS	PE1OT		22.17	13.94								
		Physical Collocation - Security Escort - Premium, per Half Hour			CLO,CLORS	PE1PT		27.32	17.08								
		V to P Conversion, Per Customer Request-Voice Grade			CLO	PE1BV	33.00										
		V to P Conversion, Per Customer Request-DS0			CLO	PE1BO	33.00										
		V to P Conversion, Per Customer Request-DS1			CLO	PE1B1	52.00										
		V to P Conversion, Per Customer request-DS3			CLO	PE1B3	52.00										
		V to P Conversion, Per Customer Request per VG Circuit Reconfigured			CLO	PE1BR	23.00										
		V to P Conversion, Per Customer Request per DS0 Circuit Reconfigured			CLO	PE1BP	23.00										
		V to P Conversion, Per Customer Request per DS1 Circuit Reconfigured			CLO	PE1BS	33.00										
		V to P Conversion, Per Customer Request per DS3 Circuit Reconfigured			CLO	PE1BE	37.00										
		V to P Conversion, Cable Pairs Assigned to Collo Space per 700 prs or fraction thereof			CLO	PE1B7	592.00										
		Physical Collocation - Co-Carrier Cross Connects - Fiber Cable Support Structure, per cable, per linear ft.			CLO,UDF	PE1ES	0.001										
		Physical Collocation - Co-Carrier Cross Connects - Copper/Coax Cable Support Structure, per cable, per lin. ft.			CLO, UE3, USL	PE1DS	0.0015										
		Physical Collocation - Co-Carrier Cross Connects - Application Fee, per application			CLO	PE1DT		583.13									
ADJACENT COLLOCATION																	
		Adjacent Collocation - Space Charge per Sq. Ft.			CLOAC	PE1JA	0.0678										
		Adjacent Collocation - Electrical Facility Charge per Linear Ft.			CLOAC	PE1JC	4.68										
		Adjacent Collocation - 2-Wire Cross-Connects			CLOAC	PE1P2	0.0223	12.37	11.87	6.04	5.45						
		Adjacent Collocation - 4-Wire Cross-Connects			UEA,UHL,UDL,UCL, CLOAC	PE1P4	0.0446	12.47	11.94	6.59	5.91						
		Adjacent Collocation - DS1 Cross-Connects			USL,CLOAC	PE1P1	1.05	22.16	16.02	6.60	5.97						
		Adjacent Collocation - DS3 Cross-Connects			CLOAC	PE1P3	14.27	21.01	15.29	7.61	6.10						
		Adjacent Collocation - 2-Fiber Cross-Connect			CLOAC	PE1F2	2.42	21.01	15.29	7.61	6.10						
		Adjacent Collocation - 4-Fiber Cross-Connect			CLOAC	PE1F4	4.62	25.70	19.97	10.01	8.50						
		Adjacent Collocation - Application Fee			CLOAC	PE1JB		1,585.83		0.51							
		Adjacent Collocation - 120V, Single Phase Standby Power Rate per AC Breaker Amp			CLOAC	PE1FB	5.29										
		Adjacent Collocation - 240V, Single Phase Standby Power Rate per AC Breaker Amp			CLOAC	PE1FD	10.58										
		Adjacent Collocation - 120V, Three Phase Standby Power Rate per AC Breaker Amp			CLOAC	PE1FE	15.87										
		Adjacent Collocation - 277V, Three Phase Standby Power Rate per AC Breaker Amp			CLOAC	PE1FG	36.65										
PHYSICAL COLLOCATION IN THE REMOTE SITE																	
		Physical Collocation in the Remote Site - Application Fee			CLORS	PE1RA		309.48		168.63							
		Cabinet Space in the Remote Site per Bay/ Rack			CLORS	PE1RB	210.05										
		Physical Collocation in the Remote Site - Security Access - Key			CLORS	PE1RD		13.17	13.17								
		Physical Collocation in the Remote Site - Space Availability Report per Premises Requested			CLORS	PE1SR		116.54	116.54								
		Physical Collocation in the Remote Site - Remote Site CLLI Code Request, per CLLI Code Requested			CLORS	PE1RE		37.77	37.77								
		Remote Site DLEC Data (BRSDD), per Compact Disk, per CO			CLORS	PE1RR		233.14									
PHYSICAL COLLOCATION IN THE REMOTE SITE - ADJACENT																	
		Remote Site-Adjacent Collocation - AC Power, per breaker amp			CLORS	PE1RS	6.27										

COLLOCATION - Mississippi														Attachment: 4		Exhibit: D	
CATEGORY		RATE ELEMENTS	Interim	Zone	BCS	USOC	RATES($)					Svc Order Submitted Elec per LSR	Svc Order Submitted Manually per LSR	Incremental Charge - Manual Svc Order vs. Electronic-1st	Incremental Charge - Manual Svc Order vs. Electronic-Add'l	Incremental Charge - Manual Svc Order vs. Electronic-Disc 1st	Incremental Charge - Manual Svc Order vs. Electronic-Disc Add'l
							Recurring	Nonrecurring		Nonrecurring Disconnect		OSS Rates($)					
								First	Add'l	First	Add'l	SOMEC	SOMAN	SOMAN	SOMAN	SOMAN	SOMAN
		Remote Site-Adjacent Collocation - Real Estate, per square foot			CLORS	PE1RT	0.134										
		Remote Site-Adjacent Collocation-Application Fee			CLORS	PE1RU		755.62	755.62								
	NOTE: If Security Escort and/or Add'l Engineering Fees become necessary for remote site collocation, the Parties will negotiate appropriate rates.																

COLLOCATION - North Carolina														Attachment: 4		Exhibit: D	
CATEGORY		RATE ELEMENTS	Interim	Zone	BCS	USOC	RATES($)					Svc Order Submitted Elec per LSR	Svc Order Submitted Manually per LSR	Incremental Charge - Manual Svc Order vs. Electronic-1st	Incremental Charge - Manual Svc Order vs. Electronic-Add'l	Incremental Charge - Manual Svc Order vs. Electronic-Disc 1st	Incremental Charge - Manual Svc Order vs. Electronic-Disc Add'l
							Recurring	Nonrecurring		Nonrecurring Disconnect		OSS Rates($)					
								First	Add'l	First	Add'l	SOMEC	SOMAN	SOMAN	SOMAN	SOMAN	SOMAN
PHYSICAL COLLOCATION																	
		Physical Collocation - Application Fee - Initial	I		CLO	PE1BA		3,850.00	3,850.00								
		Physical Collocation - Application Fee - Subsequent			CLO	PE1CA		3,119.00	3,119.00								
		Physical Collocation Reduced Rate - Application Fee - Subsequent			CLO	PE1BL		741.44									
		Physical Collocation - Space Preparation - C.O. Modification per square ft.	I		CLO	PE1SK	1.57										
		Physical Collocation - Space Preparation - Common Systems Modification per square ft. - Cageless	I		CLO	PE1SL	3.26										
		Physical Collocation - Space Preparation - Common Systems Modification per Cage	I		CLO	PE1SM	110.79										
		Space Preparation Fees - Power Per Nominal -48V Dc Amp	I		CLO	PEIFH	5.76										
		Physical Collocation - Cable Installation	I		CLO	PE1BD		2,305.00	2,305.00								
		Physical Collocation - Floor Space per Sq. Ft.	I		CLO	PE1PJ	3.45										
		Physical Collocation - Cable Support Structure	I		CLO	PE1PM	21.33										
		Physical Collocation - Power -48V DC Power, per Fused Amp	I		CLO	PE1PL	8.50										
		Physical Collocation - Power Reduction, Application Fee	I		CLO	PE1PR		399.13									
		Physical Collocation - 120V, Single Phase Standby Power Rate	I		CLO	PE1FB	5.50										
		Physical Collocation - 240V, Single Phase Standby Power Rate	I		CLO	PE1FD	11.01										
		Physical Collocation - 120V, Three Phase Standby Power Rate	I		CLO	PE1FE	16.51										
		Physical Collocation - 277V, Three Phase Standby Power Rate	I		CLO	PE1FG	38.12										
		Physical Collocation - 2-Wire Cross-Connects	I		UEANL,UEA,UDN,UDC,UAL,UHL,UCL,UEQ, UDL, UNCVX, UNLDX, UNCNX	PE1P2	0.32	41.78	39.23								
		Physical Collocation - 4-Wire Cross-Connects	I		CLO, UAL, UDL, UDN, UEA, UHL, UNCVX, UNCDX, UCL	PE1P4	0.64	41.91	39.25								
		Physical Collocation - DS1 Cross-Connects	I		CLO,UEANL,UEQ,WDS1L,WDS1S, USL, U1TD1, UXTD1, UNC1X, ULDD1, USLEL, UNLD1, UDL	PE1P1	2.34	71.02	51.08								
		Physical Collocation - DS3 Cross-Connects	I		CLO, UE3,U1TD3, UXTD3, UXTS1, UNC3X, UNCSX, ULDD3, U1TS1,ULDS1, UNLD3, UDL	PE1P3	42.84	69.84	49.43								
		Physical Collocation - 2-Fiber Cross-Connect	I		CLO, ULDO3, ULD12, ULD48, U1TO3, U1T12, U1T48, UDLO3, UDL12, UDF	PE1F2	2.94	51.97	38.59								
		Physical Collocation - 4-Fiber Cross-Connect	I		CLO, ULDO3, ULD12, ULD48, U1TO3, U1T12, U1T48, UDLO3, UDL12, UDF	PE1F4	5.62	64.53	51.15								
		Physical Collocation - Welded Wire Cage - First 100 Sq. Ft.	I		CLO	PE1BW	102.76										
		Physical Collocation - Welded Wire Cage - Add'l 50 Sq. Ft.	I		CLO	PE1CW	10.44										

CATEGORY		RATE ELEMENTS	Interim	Zone	BCS	USOC	RATES($)					Svc Order Submitted Elec per LSR	Svc Order Submitted Manually per LSR	Incremental Charge - Manual Svc Order vs. Electronic-1st	Incremental Charge - Manual Svc Order vs. Electronic-Add'l	Incremental Charge - Manual Svc Order vs. Electronic-Disc 1st	Incremental Charge - Manual Svc Order vs. Electronic-Disc Add'l
							Recurring	Nonrecurring		Nonrecurring Disconnect		OSS Rates($)					
								First	Add'l	First	Add'l	SOMEC	SOMAN	SOMAN	SOMAN	SOMAN	SOMAN
		Physical Collocation - Security Access System - Security System per Central Office	I		CLO	PE1AX	41.03										
		Physical Collocation - Security Access System - New Access Card Activation, per Card	I		CLO	PE1A1	0.062	55.30	55.30								
		Physical Collocation-Security Access System-Administrative Change, existing Access Card, per Card	I		CLO	PE1AA		15.51	15.51								
		Physical Collocation - Security Access System - Replace Lost or Stolen Card, per Card			CLO	PE1AR		45.34	45.34								
		Physical Collocation - Security Access - Initial Key, per Key			CLO	PE1AK		26.18	26.18								
		Physical Collocation - Security Access - Key, Replace Lost or Stolen Key, per Key			CLO	PE1AL		26.18	26.18								
		Physical Collocation - Space Availability Report per premises	I		CLO	PE1SR		2,140.00	2,140.00								
		POT Bay Arrangements prior to 6/1/99 - 2-Wire Cross-Connect, per cross-connect			UEANL,UEA,UDN,UDC,UAL,UHL,UCL,UEQ,CLO,UDL, UNCVX, UNCDX, UNCNX	PE1PE	0.10										
		POT Bay Arrangements prior to 6/1/99 - 4-Wire Cross-Connect, per cross-connect			UEANL,UEA,UDN,UDC,UAL,UHL,UCL,UEQ,CLO, USL, UNCVX, UNCDX	PE1PF	0.19										
		POT Bay Arrangements prior to 6/1/99 - DS1 Cross-Connect, per cross-connect			UEANL,UEA,UDN,UDC,UAL,UHL,UCL,UEQ,CLO,WDS1L,WDS1S, USL, U1TD1, UXTD1, UNC1X, ULDD1, USLEL, UNLD1	PE1PG	0.79										
		POT Bay Arrangements prior to 6/1/99 - DS3 Cross-Connect, per cross-connect			UEANL,UEA,UDN,UDC,UAL,UHL,UCL,UEQ,CLO,UE3, U1TD3, UXTD3, UXTS1, UNC3X, UNCSX, ULDD3, U1TS1, ULDS1, UNLD3, UDL, UDLSX	PE1PH	4.85										
		POT Bay Arrangements prior to 6/1/99 - 2-Fiber Cross-Connect, per cross-connect			UEANL,UEA,UDN,UDC,UAL,UHL,UCL,UEQ,CLO, ULDO3, ULD12, ULD48, U1TO3, U1T12, U1T48, UDLO3, UDL12, UDF	PE1B2	45.30										
		POT Bay Arrangements prior to 6/1/99 - 4-Fiber Cross-Connect, per cross-connect			UEANL,UEA,UDN,UDC,UAL,UHL,UCL,UEQ,CLO, ULDO3, ULD12, ULD48, U1TO3, U1T12, U1T48, UDLO3, UDL12, UDF	PE1B4	61.09										
		Physical Collocation - Request Resend of CFA Information, per CLLI			CLO	PE1C9		77.48									
		Collocation Cable Records - per request			CLO	PE1CR		1,707.00									
		Collocation Cable Records - VG/DS0 Cable, per cable record			CLO	PE1CD		923.08									
		Collocation Cable Records - VG/DS0 Cable, per each 100 pair			CLO	PE1CO		18.02	18.02								
		Collocation Cable Records - DS1, per T1TIE			CLO	PE1C1		8.43	8.43								
		Collocation Cable Records - DS3, per T3TIE			CLO	PE1C3		29.51	29.51								

COLLOCATION - North Carolina														Attachment: 4		Exhibit: D	
CATEGORY		RATE ELEMENTS	Interim	Zone	BCS	USOC	RATES($)					Svc Order Submitted Elec per LSR	Svc Order Submitted Manually per LSR	Incremental Charge - Manual Svc Order vs. Electronic-1st	Incremental Charge - Manual Svc Order vs. Electronic-Add'l	Incremental Charge - Manual Svc Order vs. Electronic-Disc 1st	Incremental Charge - Manual Svc Order vs. Electronic-Disc Add'l
							Recurring	Nonrecurring		Nonrecurring Disconnect		OSS Rates($)					
								First	Add'l	First	Add'l	SOMEC	SOMAN	SOMAN	SOMAN	SOMAN	SOMAN
		Collocation Cable Records - Fiber Cable, per 99 fiber records			CLO	PE1CB		278.82	278.82								
		Physical Collocation - Security Escort - Basic, per Half Hour			CLO,CLORS	PE1BT		42.92	25.56								
		Physical Collocation - Security Escort - Overtime, per Half Hour			CLO,CLORS	PE1OT		54.51	32.44								
		Physical Collocation - Security Escort - Premium, per Half Hour			CLO,CLORS	PE1PT		66.10	39.32								
		V to P Conversion, Per Customer Request-Voice Grade			CLO	PE1BV	33.00										
		V to P Conversion, Per Customer Request-DS0			CLO	PE1BO	33.00										
		V to P Conversion, Per Customer Request-DS1			CLO	PE1B1	52.00										
		V to P Conversion, Per Customer request-DS3			CLO	PE1B3	52.00										
		V to P Conversion, Per Customer Request per VG Circuit Reconfigured			CLO	PE1BR	23.00										
		V to P Conversion, Per Customer Request per DS0 Circuit Reconfigured			CLO	PE1BP	23.00										
		V to P Conversion, Per Customer Request per DS1 Circuit Reconfigured			CLO	PE1BS	33.00										
		V to P Conversion, Per Customer Request per DS3 Circuit Reconfigured			CLO	PE1BE	37.00										
		V to P Conversion, Cable Pairs Assigned to Collo Space per 700 prs or fraction thereof			CLO	PE1B7	592.00										
		Physical Collocation - Co-Carrier Cross Connects - Fiber Cable Support Structure, per cable, per linear ft.			CLO,UDF	PE1ES	0.0018										
		Physical Collocation - Co-Carrier Cross Connects - Copper/Coax Cable Support Structure, per cable, per lin. ft.			CLO, UE3, USL	PE1DS	0.0027										
		Physical Collocation - Co-Carrier Cross Connects - Application Fee, per application			CLO	PE1DT		583.66									
ADJACENT COLLOCATION																	
		Adjacent Collocation - Space Charge per Sq. Ft.			CLOAC	PE1JA	0.179										
		Adjacent Collocation - Electrical Facility Charge per Linear Ft.			CLOAC	PE1JC	5.96										
		Adjacent Collocation - 2-Wire Cross-Connects			CLOAC	PE1P2	0.32	41.78	39.23								
		Adjacent Collocation - 4-Wire Cross-Connects			UEA,UHL,UDL,UCL, CLOAC	PE1P4	0.64	41.91	39.25								
		Adjacent Collocation - DS1 Cross-Connects			USL,CLOAC	PE1P1	2.34	71.02	51.08								
		Adjacent Collocation - DS3 Cross-Connects			CLOAC	PE1P3	42.84	69.84	49.43								
		Adjacent Collocation - 2-Fiber Cross-Connect			CLOAC	PE1F2	2.94	51.97	38.59								
		Adjacent Collocation - 4-Fiber Cross-Connect			CLOAC	PE1F4	5.62	64.53	51.15								
		Adjacent Collocation - Application Fee			CLOAC	PE1JB		3,153.00									
		Adjacent Collocation - 120V, Single Phase Standby Power Rate per AC Breaker Amp			CLOAC	PE1FB	5.50										
		Adjacent Collocation - 240V, Single Phase Standby Power Rate per AC Breaker Amp			CLOAC	PE1FD	11.01										
		Adjacent Collocation - 120V, Three Phase Standby Power Rate per AC Breaker Amp			CLOAC	PE1FE	16.51										
		Adjacent Collocation - 277V, Three Phase Standby Power Rate per AC Breaker Amp			CLOAC	PE1FG	38.12										
PHYSICAL COLLOCATION IN THE REMOTE SITE																	
		Physical Collocation in the Remote Site - Application Fee			CLORS	PE1RA		865.34	865.34								
		Cabinet Space in the Remote Site per Bay/ Rack			CLORS	PE1RB	254.02										
		Physical Collocation in the Remote Site - Security Access - Key			CLORS	PE1RD		26.06	26.06								
		Physical Collocation in the Remote Site - Space Availability Report per Premises Requested			CLORS	PE1SR		230.60	230.60								
		Physical Collocation in the Remote Site - Remote Site CLLI Code Request, per CLLI Code Requested			CLORS	PE1RE		74.74	74.74								
		Remote Site DLEC Data (BRSDD), per Compact Disk, per CO			CLORS	PE1RR		232.94									
PHYSICAL COLLOCATION IN THE REMOTE SITE - ADJACENT																	
		Remote Site-Adjacent Collocation - AC Power, per breaker amp			CLORS	PE1RS	6.27										

COLLOCATION - North Carolina														Attachment: 4		Exhibit: D	
CATEGORY		RATE ELEMENTS	Interim	Zone	BCS	USOC	RATES($)					Svc Order Submitted Elec per LSR	Svc Order Submitted Manually per LSR	Incremental Charge - Manual Svc Order vs. Electronic-1st	Incremental Charge - Manual Svc Order vs. Electronic-Add'l	Incremental Charge - Manual Svc Order vs. Electronic-Disc 1st	Incremental Charge - Manual Svc Order vs. Electronic-Disc Add'l
							Recurring	Nonrecurring		Nonrecurring Disconnect		OSS Rates($)					
								First	Add'l	First	Add'l	SOMEC	SOMAN	SOMAN	SOMAN	SOMAN	SOMAN
		Remote Site-Adjacent Collocation - Real Estate, per square foot			CLORS	PE1RT	0.134										
		Remote Site-Adjacent Collocation-Application Fee			CLORS	PE1RU		755.62	755.62								
	NOTE: If Security Escort and/or Add'l Engineering Fees become necessary for remote site collocation, the Parties will negotiate appropriate rates.																

COLLOCATION - South Carolina

Attachment: 4 | Exhibit: D

CATEGORY	RATE ELEMENTS	Interim	Zone	BCS	USOC	RATES($) Recurring	Nonrecurring First	Nonrecurring Add'l	Nonrecurring Disconnect First	Nonrecurring Disconnect Add'l	Svc Order Submitted Elec per LSR	Svc Order Submitted Manually per LSR	Incremental Charge - Manual Svc Order vs. Electronic-1st	Incremental Charge - Manual Svc Order vs. Electronic-Add'l	Incremental Charge - Manual Svc Order vs. Electronic-Disc 1st	Incremental Charge - Manual Svc Order vs. Electronic-Disc Add'l
											OSS Rates($)					
											SOMEC	SOMAN	SOMAN	SOMAN	SOMAN	SOMAN
PHYSICAL COLLOCATION																
	Physical Collocation - Application Fee - Initial			CLO	PE1BA		1,883.67	1,883.67	0.51	0.51						
	Physical Collocation - Application Fee - Subsequent			CLO	PE1CA		1,570.10	1,570.10	0.51	0.51						
	Physical Collocation Reduced Rate - Application Fee - Subsequent			CLO	PE1BL		743.66									
	Physical Collocation - Space Preparation - Firm Order Processing			CLO	PE1SJ		602.05	602.05								
	Physical Collocation - Space Preparation - C.O. Modification per square ft.			CLO	PE1SK	2.75										
	Physical Collocation - Space Preparation - Common Systems Modification per square ft. - Cageless			CLO	PE1SL	3.24										
	Physical Collocation - Space Preparation - Common Systems Modification per Cage			CLO	PE1SM	110.16										
	Physical Collocation - Cable Installation			CLO	PE1BD		794.22	794.22	22.54	22.54						
	Physical Collocation - Floor Space per Sq. Ft.			CLO	PE1PJ	3.95										
	Physical Collocation - Cable Support Structure			CLO	PE1PM	21.33										
	Physical Collocation - Power -48V DC Power, per Fused Amp			CLO	PE1PL	9.19										
	Physical Collocation - Power Reduction, Application Fee	I		CLO	PE1PR		400.33									
	Physical Collocation - 120V, Single Phase Standby Power Rate			CLO	PE1FB	5.67										
	Physical Collocation - 240V, Single Phase Standby Power Rate			CLO	PE1FD	11.36										
	Physical Collocation - 120V, Three Phase Standby Power Rate			CLO	PE1FE	17.03										
	Physical Collocation - 277V, Three Phase Standby Power Rate			CLO	PE1FG	39.33										
	Physical Collocation - 2-Wire Cross-Connects			UEANL,UEA,UDN,UDC,UAL,UHL,UCL,UEQ, UDL, UNCVX, UNLDX, UNCNX	PE1P2	0.0341	12.32	11.83	6.04	5.45						
	Physical Collocation - 4-Wire Cross-Connects			CLO, UAL, UDL, UDN, UEA, UHL, UNCVX, UNCDX, UCL	PE1P4	0.0682	12.42	11.90	6.40	5.74						
	Physical Collocation - DS1 Cross-Connects			CLO,UEANL,UEQ,WDS1L,WDS1S, USL, U1TD1, UXTD1, UNC1X, ULDD1, USLEL, UNLD1, UDL	PE1P1	1.12	22.08	15.96	6.42	5.80						
	Physical Collocation - DS3 Cross-Connects			CLO, UE3,U1TD3, UXTD3, UXTS1, UNC3X, UNCSX, ULDD3, U1TS1,ULDS1, UNLD3, UDL	PE1P3	14.21	20.94	15.23	7.39	5.93						
	Physical Collocation - 2-Fiber Cross-Connect			CLO, ULDO3, ULD12, ULD48, U1TO3, U1T12, U1T48, UDLO3, UDL12, UDF	PE1F2	2.82	20.94	15.23	7.40	5.93						
	Physical Collocation - 4-Fiber Cross-Connect			CLO, ULDO3, ULD12, ULD48, U1TO3, U1T12, U1T48, UDLO3, UDL12, UDF	PE1F4	5.01	25.61	19.90	9.73	8.26						
	Physical Collocation - Welded Wire Cage - First 100 Sq. Ft.			CLO	PE1BW	219.19										

COLLOCATION - South Carolina														Attachment: 4		Exhibit: D	
CATEGORY		RATE ELEMENTS	Interim	Zone	BCS	USOC	RATES($)					Svc Order Submitted Elec per LSR	Svc Order Submitted Manually per LSR	Incremental Charge - Manual Svc Order vs. Electronic-1st	Incremental Charge - Manual Svc Order vs. Electronic-Add'l	Incremental Charge - Manual Svc Order vs. Electronic-Disc 1st	Incremental Charge - Manual Svc Order vs. Electronic-Disc Add'l
							Recurring	Nonrecurring		Nonrecurring Disconnect		OSS Rates($)					
								First	Add'l	First	Add'l	SOMEC	SOMAN	SOMAN	SOMAN	SOMAN	SOMAN
		Physical Collocation - Welded Wire Cage - Add'l 50 Sq. Ft.			CLO	PE1CW	21.50										
		Physical Collocation - Security Access System - Security System per Central Office			CLO	PE1AX	74.72										
		Physical Collocation - Security Access System - New Access Card Activation, per Card			CLO	PE1A1	0.0601	27.85	27.85								
		Physical Collocation-Security Access System-Administrative Change, existing Access Card, per Card			CLO	PE1AA		7.81	7.81								
		Physical Collocation - Security Access System - Replace Lost or Stolen Card, per Card			CLO	PE1AR		22.83	22.83								
		Physical Collocation - Security Access - Initial Key, per Key			CLO	PE1AK		13.13	13.13								
		Physical Collocation - Security Access - Key, Replace Lost or Stolen Key, per Key			CLO	PE1AL		13.13	13.13								
		Physical Collocation - Space Availability Report per premises			CLO	PE1SR		1,077.57	1,077.57								
		POT Bay Arrangements prior to 6/1/99 - 2-Wire Cross-Connect, per cross-connect			UEANL,UEA,UDN,UDC,UAL,UHL,UCL,UEQ,CLO,UDL, UNCVX, UNCDX, UNCNX	PE1PE	0.085										
		POT Bay Arrangements prior to 6/1/99 - 4-Wire Cross-Connect, per cross-connect			UEANL,UEA,UDN,UDC,UAL,UHL,UCL,UEQ,CLO, USL, UNCVX, UNCDX	PE1PF	0.1701										
		POT Bay Arrangements prior to 6/1/99 - DS1 Cross-Connect, per cross-connect			UEANL,UEA,UDN,UDC,UAL,UHL,UCL,UEQ,CLO,WDS1L,WDS1S, USL, U1TD1, UXTD1, UNC1X, ULDD1, USLEL, UNLD1	PE1PG	1.20										
		POT Bay Arrangements prior to 6/1/99 - DS3 Cross-Connect, per cross-connect			UEANL,UEA,UDN,UDC,UAL,UHL,UCL,UEQ,CLO,UE3, U1TD3, UXTD3, UXTS1, UNC3X, UNCSX, ULDD3, U1TS1, ULDS1, UNLD3, UDL, UDLSX	PE1PH	10.71										
		POT Bay Arrangements prior to 6/1/99 - 2-Fiber Cross-Connect, per cross-connect			UEANL,UEA,UDN,UDC,UAL,UHL,UCL,UEQ,CLO, ULDO3, ULD12, ULD48, U1TO3, U1T12, U1T48, UDLO3, UDL12, UDF	PE1B2	36.55										
		POT Bay Arrangements prior to 6/1/99 - 4-Fiber Cross-Connect, per cross-connect			UEANL,UEA,UDN,UDC,UAL,UHL,UCL,UEQ,CLO, ULDO3, ULD12, ULD48, U1TO3, U1T12, U1T48, UDLO3, UDL12, UDF	PE1B4	49.29										
		Physical Collocation - Request Resend of CFA Information, per CLLI			CLO	PE1C9		77.71									
		Collocation Cable Records - per request			CLO	PE1CR		760.98		133.29							
		Collocation Cable Records - VG/DS0 Cable, per cable record			CLO	PE1CD		327.65		189.54							
		Collocation Cable Records - VG/DS0 Cable, per each 100 pair			CLO	PE1CO		4.82	4.82	5.91	5.91						
		Collocation Cable Records - DS1, per T1TIE			CLO	PE1C1		2.26	2.26	2.77	2.77						

COLLOCATION - South Carolina														Attachment: 4		Exhibit: D	
CATEGORY		RATE ELEMENTS	Interim	Zone	BCS	USOC	RATES($)					Svc Order Submitted Elec per LSR	Svc Order Submitted Manually per LSR	Incremental Charge - Manual Svc Order vs. Electronic-1st	Incremental Charge - Manual Svc Order vs. Electronic-Add'l	Incremental Charge - Manual Svc Order vs. Electronic-Disc 1st	Incremental Charge - Manual Svc Order vs. Electronic-Disc Add'l
							Recurring	Nonrecurring		Nonrecurring Disconnect		OSS Rates($)					
								First	Add'l	First	Add'l	SOMEC	SOMAN	SOMAN	SOMAN	SOMAN	SOMAN
		Collocation Cable Records - DS3, per T3TIE			CLO	PE1C3		7.90	7.90	9.68	9.68						
		Collocation Cable Records - Fiber Cable, per 99 fiber records			CLO	PE1CB		84.68	84.68	77.30	77.30						
		Physical Collocation - Security Escort - Basic, per Half Hour			CLO,CLORS	PE1BT		16.96	10.75								
		Physical Collocation - Security Escort - Overtime, per Half Hour			CLO,CLORS	PE1OT		22.10	13.89								
		Physical Collocation - Security Escort - Premium, per Half Hour			CLO,CLORS	PE1PT		27.23	17.02								
		V to P Conversion, Per Customer Request-Voice Grade			CLO	PE1BV	33.00										
		V to P Conversion, Per Customer Request-DS0			CLO	PE1BO	33.00										
		V to P Conversion, Per Customer Request-DS1			CLO	PE1B1	52.00										
		V to P Conversion, Per Customer request-DS3			CLO	PE1B3	52.00										
		V to P Conversion, Per Customer Request per VG Circuit Reconfigured			CLO	PE1BR	23.00										
		V to P Conversion, Per Customer Request per DS0 Circuit Reconfigured			CLO	PE1BP	23.00										
		V to P Conversion, Per Customer Request per DS1 Circuit Reconfigured			CLO	PE1BS	33.00										
		V to P Conversion, Per Customer Request per DS3 Circuit Reconfigured			CLO	PE1BE	37.00										
		V to P Conversion, Cable Pairs Assigned to Collo Space per 700 prs or fraction thereof			CLO	PE1B7	592.00										
		Physical Collocation - Co-Carrier Cross Connects - Fiber Cable Support Structure, per cable, per linear ft.			CLO,UDF	PE1ES	0.001										
		Physical Collocation - Co-Carrier Cross Connects - Copper/Coax Cable Support Structure, per cable, per lin. ft.			CLO, UE3, USL	PE1DS	0.0015										
		Physical Collocation - Co-Carrier Cross Connects - Application Fee, per application			CLO	PE1DT		584.42									
ADJACENT COLLOCATION																	
		Adjacent Collocation - Space Charge per Sq. Ft.			CLOAC	PE1JA	0.0939										
		Adjacent Collocation - Electrical Facility Charge per Linear Ft.			CLOAC	PE1JC	6.40										
		Adjacent Collocation - 2-Wire Cross-Connects			CLOAC	PE1P2	0.0264	12.32	11.83	6.04	5.45						
		Adjacent Collocation - 4-Wire Cross-Connects			UEA,UHL,UDL,UCL, CLOAC	PE1P4	0.0527	12.42	11.90	6.40	5.74						
		Adjacent Collocation - DS1 Cross-Connects			USL,CLOAC	PE1P1	1.03	22.08	15.96	6.42	5.80						
		Adjacent Collocation - DS3 Cross-Connects			CLOAC	PE1P3	14.00	20.94	15.23	7.39	5.93						
		Adjacent Collocation - 2-Fiber Cross-Connect			CLOAC	PE1F2	2.37	20.94	15.23	7.40	5.93						
		Adjacent Collocation - 4-Fiber Cross-Connect			CLOAC	PE1F4	4.53	25.61	19.90	9.73	8.26						
		Adjacent Collocation - Application Fee			CLOAC	PE1JB		1,580.20		0.51							
		Adjacent Collocation - 120V, Single Phase Standby Power Rate per AC Breaker Amp			CLOAC	PE1FB	5.67										
		Adjacent Collocation - 240V, Single Phase Standby Power Rate per AC Breaker Amp			CLOAC	PE1FD	11.36										
		Adjacent Collocation - 120V, Three Phase Standby Power Rate per AC Breaker Amp			CLOAC	PE1FE	17.03										
		Adjacent Collocation - 277V, Three Phase Standby Power Rate per AC Breaker Amp			CLOAC	PE1FG	39.33										
PHYSICAL COLLOCATION IN THE REMOTE SITE																	
		Physical Collocation in the Remote Site - Application Fee			CLORS	PE1RA		308.38	308.38	168.60	168.60						
		Cabinet Space in the Remote Site per Bay/ Rack			CLORS	PE1RB	246.44										
		Physical Collocation in the Remote Site - Security Access - Key			CLORS	PE1RD		13.13	13.13								
		Physical Collocation in the Remote Site - Space Availability Report per Premises Requested			CLORS	PE1SR		116.13	116.13								
		Physical Collocation in the Remote Site - Remote Site CLLI Code Request, per CLLI Code Requested			CLORS	PE1RE		37.64	37.64								
		Remote Site DLEC Data (BRSDD), per Compact Disk, per CO			CLORS	PE1RR		234.50									
PHYSICAL COLLOCATION IN THE REMOTE SITE - ADJACENT																	
		Remote Site-Adjacent Collocation - AC Power, per breaker amp			CLORS	PE1RS	6.27										

COLLOCATION - South Carolina														Attachment: 4		Exhibit: D	
CATEGORY		RATE ELEMENTS	Interim	Zone	BCS	USOC	RATES($)					Svc Order Submitted Elec per LSR	Svc Order Submitted Manually per LSR	Incremental Charge - Manual Svc Order vs. Electronic-1st	Incremental Charge - Manual Svc Order vs. Electronic-Add'l	Incremental Charge - Manual Svc Order vs. Electronic-Disc 1st	Incremental Charge - Manual Svc Order vs. Electronic-Disc Add'l
							Recurring	Nonrecurring		Nonrecurring Disconnect		OSS Rates($)					
								First	Add'l	First	Add'l	SOMEC	SOMAN	SOMAN	SOMAN	SOMAN	SOMAN
		Remote Site-Adjacent Collocation - Real Estate, per square foot			CLORS	PE1RT	0.134										
		Remote Site-Adjacent Collocation-Application Fee			CLORS	PE1RU		755.62	755.62								
	NOTE: If Security Escort and/or Add'l Engineering Fees become necessary for remote site collocation, the Parties will negotiate appropriate rates.																

COLLOCATION - Tennessee

Attachment: 4 | Exhibit: D

CATEGORY	RATE ELEMENTS	Interim	Zone	BCS	USOC	RATES($) Recurring	Nonrecurring First	Nonrecurring Add'l	Nonrecurring Disconnect First	Nonrecurring Disconnect Add'l	Svc Order Submitted Elec per LSR	Svc Order Submitted Manually per LSR	Incremental Charge - Manual Svc Order vs. Electronic-1st	Incremental Charge - Manual Svc Order vs. Electronic-Add'l	Incremental Charge - Manual Svc Order vs. Electronic-Disc 1st	Incremental Charge - Manual Svc Order vs. Electronic-Disc Add'l
											OSS Rates($)					
											SOMEC	SOMAN	SOMAN	SOMAN	SOMAN	SOMAN
PHYSICAL COLLOCATION																
	Physical Collocation - Application Fee - Initial			CLO	PE1BA		3,767.00	3,767.00								
	Physical Collocation - Application Fee - Subsequent			CLO	PE1CA		3,140.00	3,140.00								
	Physical Collocation Reduced Rate - Application Fee - Subsequent			CLO	PE1BL		743.25									
	Physical Collocation - Space Preparation - Firm Order Processing	I		CLO	PE1SJ		1,204.00	1,204.00								
	Physical Collocation - Space Preparation - C.O. Modification per square ft.	I		CLO	PE1SK	2.74										
	Physical Collocation - Space Preparation - Common Systems Modification per square ft. - Cageless	I		CLO	PE1SL	2.95										
	Physical Collocation - Space Preparation - Common Systems Modification per Cage	I		CLO	PE1SM	100.14										
	Physical Collocation - Cable Installation			CLO	PE1BD		1,757.00	1,757.00								
	Physical Collocation - Floor Space per Sq. Ft.			CLO	PE1PJ	6.75										
	Physical Collocation - Cable Support Structure			CLO	PE1PM	19.80										
	Physical Collocation - Power -48V DC Power, per Fused Amp	I		CLO	PE1PL	8.87										
	Physical Collocation - Power Reduction, Application Fee	I		CLO	PE1PR		400.10									
	Physical Collocation - 120V, Single Phase Standby Power Rate	I		CLO	PE1FB	5.60										
	Physical Collocation - 240V, Single Phase Standby Power Rate	I		CLO	PE1FD	11.22										
	Physical Collocation - 120V, Three Phase Standby Power Rate	I		CLO	PE1FE	16.82										
	Physical Collocation - 277V, Three Phase Standby Power Rate	I		CLO	PE1FG	38.84										
	Physical Collocation - 2-Wire Cross-Connects			UEANL,UEA,UDN,UDC,UAL,UHL,UCL,UEQ, UDL, UNCVX, UNLDX, UNCNX	PE1P2	0.033	33.82	31.92								
	Physical Collocation - 4-Wire Cross-Connects			CLO, UAL, UDL, UDN, UEA, UHL, UNCVX, UNCDX, UCL	PE1P4	0.066	33.94	31.95								
	Physical Collocation - DS1 Cross-Connects			CLO,UEANL,UEQ,WDS1L,WDS1S, USL, U1TD1, UXTD1, UNC1X, ULDD1, USLEL, UNLD1, UDL	PE1P1	1.51	53.27	40.16								
	Physical Collocation - DS3 Cross-Connects			CLO, UE3,U1TD3, UXTD3, UXTS1, UNC3X, UNCSX, ULDD3, U1TS1,ULDS1, UNLD3, UDL	PE1P3	19.26	52.37	38.89								
	Physical Collocation - 2-Fiber Cross-Connect			CLO, ULDO3, ULD12, ULD48, U1TO3, U1T12, U1T48, UDLO3, UDL12, UDF	PE1F2	15.64	41.56	29.82	12.96	10.34			2.69	2.69	1.56	1.56
	Physical Collocation - 4-Fiber Cross-Connect			CLO, ULDO3, ULD12, ULD48, U1TO3, U1T12, U1T48, UDLO3, UDL12, UDF	PE1F4	28.11	50.53	38.78	16.97	14.35			2.69	2.69	1.56	1.56
	Physical Collocation - Welded Wire Cage - First 100 Sq. Ft.			CLO	PE1BW	218.53										

COLLOCATION - Tennessee														Attachment: 4		Exhibit: D	
CATEGORY		RATE ELEMENTS	Interim	Zone	BCS	USOC	RATES($)					Svc Order Submitted Elec per LSR	Svc Order Submitted Manually per LSR	Incremental Charge - Manual Svc Order vs. Electronic-1st	Incremental Charge - Manual Svc Order vs. Electronic-Add'l	Incremental Charge - Manual Svc Order vs. Electronic-Disc 1st	Incremental Charge - Manual Svc Order vs. Electronic-Disc Add'l
							Recurring	Nonrecurring		Nonrecurring Disconnect		OSS Rates($)					
								First	Add'l	First	Add'l	SOMEC	SOMAN	SOMAN	SOMAN	SOMAN	SOMAN
		Physical Collocation - Welded Wire Cage - Add'l 50 Sq. Ft.			CLO	PE1CW	21.44										
		Physical Collocation - Security Access System - Security System per Central Office			CLO	PE1AX	55.99										
		Physical Collocation - Security Access System - New Access Card Activation, per Card			CLO	PE1A1	0.059	55.67	55.67								
		Physical Collocation-Security Access System-Administrative Change, existing Access Card, per Card			CLO	PE1AA		15.61	15.61								
		Physical Collocation - Security Access System - Replace Lost or Stolen Card, per Card			CLO	PE1AR		45.64	45.64								
		Physical Collocation - Security Access - Initial Key, per Key			CLO	PE1AK		26.24	26.24								
		Physical Collocation - Security Access - Key, Replace Lost or Stolen Key, per Key			CLO	PE1AL		26.24	26.24								
		Physical Collocation - Space Availability Report per premises	I		CLO	PE1SR		2,027.00	2,154.00								
		POT Bay Arrangements prior to 6/1/99 - 2-Wire Cross-Connect, per cross-connect			UEANL,UEA,UDN,UDC,UAL,UHL,UCL,UEQ,CLO,UDL, UNCVX, UNCDX, UNCNX	PE1PE	0.40										
		POT Bay Arrangements prior to 6/1/99 - 4-Wire Cross-Connect, per cross-connect			UEANL,UEA,UDN,UDC,UAL,UHL,UCL,UEQ,CLO, USL, UNCVX, UNCDX	PE1PF	1.20										
		POT Bay Arrangements prior to 6/1/99 - DS1 Cross-Connect, per cross-connect			UEANL,UEA,UDN,UDC,UAL,UHL,UCL,UEQ,CLO,WDS1L,WDS1S, USL, U1TD1, UXTD1, UNC1X, ULDD1, USLEL, UNLD1	PE1PG	1.20										
		POT Bay Arrangements prior to 6/1/99 - DS3 Cross-Connect, per cross-connect			UEANL,UEA,UDN,UDC,UAL,UHL,UCL,UEQ,CLO,UE3, U1TD3, UXTD3, UXTS1, UNC3X, UNCSX, ULDD3, U1TS1, ULDS1, UNLD3, UDL, UDLSX	PE1PH	8.00										
		POT Bay Arrangements prior to 6/1/99 - 2-Fiber Cross-Connect, Per Cross-Connect			UEANL,UEA,UDN,UDC,UAL,UHL,UCL,UEQ,CLO, ULDO3, ULD12, ULD48, U1TO3, U1T12, U1T48, UDLO3, UDL12, UDF	PE1B2	38.79										
		POT Bay Arrangements prior to 6/1/99 - 4-Fiber Cross-Connect, per cross-connect			UEANL,UEA,UDN,UDC,UAL,UHL,UCL,UEQ,CLO, ULDO3, ULD12, ULD48, U1TO3, U1T12, U1T48, UDLO3, UDL12, UDF	PE1B4	52.31										
		Physical Collocation - Request Resend of CFA Information, per CLLI			CLO	PE1C9		77.67									
		Collocation Cable Records - per request			CLO	PE1CR		1,711.00									
		Collocation Cable Records - VG/DS0 Cable, per cable record			CLO	PE1CD		925.06									
		Collocation Cable Records - VG/DS0 Cable, per each 100 pair			CLO	PE1CO		18.05	18.05								
		Collocation Cable Records - DS1, per T1TIE			CLO	PE1C1		8.45	8.45								

COLLOCATION - Tennessee														Attachment: 4		Exhibit: D	
CATEGORY		RATE ELEMENTS	Interim	Zone	BCS	USOC	RATES($)					Svc Order Submitted Elec per LSR	Svc Order Submitted Manually per LSR	Incremental Charge - Manual Svc Order vs. Electronic-1st	Incremental Charge - Manual Svc Order vs. Electronic-Add'l	Incremental Charge - Manual Svc Order vs. Electronic-Disc 1st	Incremental Charge - Manual Svc Order vs. Electronic-Disc Add'l
							Recurring	Nonrecurring		Nonrecurring Disconnect		OSS Rates($)					
								First	Add'l	First	Add'l	SOMEC	SOMAN	SOMAN	SOMAN	SOMAN	SOMAN
		Collocation Cable Records - DS3, per T3TIE			CLO	PE1C3		29.57	29.57								
		Collocation Cable Records - Fiber Cable, per 99 fiber records			CLO	PE1CB		279.42	279.42								
		Physical Collocation - Security Escort - Basic, per Half Hour			CLO,CLORS	PE1BT		33.91	21.49								
		Physical Collocation - Security Escort - Overtime, per Half Hour			CLO,CLORS	PE1OT		44.17	27.76								
		Physical Collocation - Security Escort - Premium, per Half Hour			CLO,CLORS	PE1PT		54.42	34.02								
		V to P Conversion, Per Customer Request-Voice Grade			CLO	PE1BV	33.00										
		V to P Conversion, Per Customer Request-DS0			CLO	PE1BO	33.00										
		V to P Conversion, Per Customer Request-DS1			CLO	PE1B1	52.00										
		V to P Conversion, Per Customer request-DS3			CLO	PE1B3	52.00										
		V to P Conversion, Per Customer Request per VG Circuit Reconfigured			CLO	PE1BR	23.00										
		V to P Conversion, Per Customer Request per DS0 Circuit Reconfigured			CLO	PE1BP	23.00										
		V to P Conversion, Per Customer Request per DS1 Circuit Reconfigured			CLO	PE1BS	33.00										
		V to P Conversion, Per Customer Request per DS3 Circuit Reconfigured			CLO	PE1BE	37.00										
		V to P Conversion, Cable Pairs Assigned to Collo Space per 700 prs or fraction thereof			CLO	PE1B7	592.00										
		Physical Caged Collocation-App Cost(initial & sub)-Planning, per request			CLO	PEIAC	16.16	2,903.66	2,903.66								
		Physical Caged Collocation-Space Prep-Grounding, per location			CLO	PE1BB	4.32										
		Physical Caged Collocation-Space Prep-Power Delivery, per 40 amp Feed			CLO	PE1SN		142.40									
		Physical Caged Collocation-Space Prep-Power Delivery, per 100 amp Feed			CLO	PE1SO		185.72									
		Physical Caged Collocation-Space Prep-Power Delivery, per 200 amp Feed			CLO	PEISP		242.05									
		Physical Caged Collocation-Space Enclosure-Cage Preparation, per first 100 sq. ft.			CLO	PE1S1	110.97										
		Phycical Caged Collocation-Space Enclosure-Cage Preparation2, per add'l 50 sq. ft.			CLO	PE1S5	55.49										
		Physical Caged collocation-Cable Installation-Entrance Fiber Structure, interduct per ft.			CLO	PE1CP	0.0156										
		Phycical Caged Collocation-Cable Installation-Entrance Fiber, per cable			CLO	PE1CQ	2.56	944.27									
		Physical Caged Collocation-Floor Space-Land & Buildings, per sq. ft.			CLO	PE1FS	5.94										
		Physical Caged Collocation-Cable Support Structure-Cable Racking, per entrance cable			CLO	PE1CS	21.47										
		Plhysical Caged Collocation-Power-Power Consumption, per amp DC plant			CLO	PE1PN	3.55										
		Physical Caged Collocation-Power-Power Consumption,per amp AC usage			CLO	PE1PO	2.03										
		Physical Caged Collocation-2-wire Cross Connects-Voice Grade ckts, per ckt.			CLO	PE12C	0.0475	7.68									
		Physical Caged Collocation-4-wire Cross Connects-Voice Grade Ckts, per ckt.			CLO	PE14C	0.0475	7.68									
		Physical Caged Collocation-DS1 Cross Connects-connection to DCS, per ckt.			CLO	PE11S	7.68	41.65									
		Physical Caged Collocation-DS1 Cross Connects-Connection to DSX, per ckt.			CLO	PE11X	0.38	41.65									
		Physical Caged Collocation-DS3 Cross Connects-Connection to DCS, per ckt.			CLO	PE13S	53.96	298.03									
		Physical Caged Collocation-DS3 Cross Connects-Connection to DSX, per ckt.			CLO	PE13X	9.32	298.03									

COLLOCATION - Tennessee														Attachment: 4		Exhibit: D	
CATEGORY		RATE ELEMENTS	Interim	Zone	BCS	USOC	RATES($)					Svc Order Submitted Elec per LSR	Svc Order Submitted Manually per LSR	Incremental Charge - Manual Svc Order vs. Electronic-1st	Incremental Charge - Manual Svc Order vs. Electronic-Add'l	Incremental Charge - Manual Svc Order vs. Electronic-Disc 1st	Incremental Charge - Manual Svc Order vs. Electronic-Disc Add'l
							Recurring	Nonrecurring		Nonrecurring Disconnect		OSS Rates($)					
								First	Add'l	First	Add'l	SOMEC	SOMAN	SOMAN	SOMAN	SOMAN	SOMAN
		Physical Caged Collocation-Security Access-Access Cards, per 5 Cards			CLO	PE1A2		76.10									
		Physical Collocation - Co-Carrier Cross Connects - Fiber Cable Support Structure, per cable, per linear ft.			CLO,UDF	PE1ES	0.0013										
		Physical Collocation - Co-Carrier Cross Connects - Copper/Coax Cable Support Structure, per cable, per lin. ft.			CLO, UE3, USL	PE1DS	0.0019										
		Physical Collocation - Co-Carrier Cross Connects - Application Fee, per application			CLO	PE1DT		585.09									
ADJACENT COLLOCATION																	
		Adjacent Collocation - Space Charge per Sq. Ft.			CLOAC	PE1JA	0.0656										
		Adjacent Collocation - Electrical Facility Charge per Linear Ft.			CLOAC	PE1JC	5.53										
		Adjacent Collocation - 2-Wire Cross-Connects			CLOAC	PE1P2	0.034	11.12	10.18	11.33	10.23			1.77	1.77	1.12	1.12
		Adjacent Collocation - 4-Wire Cross-Connects			UEA,UHL,UDL,UCL, CLOAC	PE1P4	0.33	11.30	10.31	11.62	10.44			1.77	1.77	1.12	1.12
		Adjacent Collocation - DS1 Cross-Connects			USL,CLOAC	PE1P1	1.70	28.39	16.88	11.65	10.54			1.77	1.77	1.12	1.12
		Adjacent Collocation - DS3 Cross-Connects			CLOAC	PE1P3	19.03	26.23	15.51	13.40	10.77			1.77	1.77	1.12	1.12
		Adjacent Collocation - 2-Fiber Cross-Connect			CLOAC	PE1F2	3.49	26.23	15.51	13.41	10.78			1.77	1.77	1.12	1.12
		Adjacent Collocation - 4-Fiber Cross-Connect			CLOAC	PE1F4	6.50	29.75	19.02	17.60	14.97			1.77	1.77	1.12	1.12
		Adjacent Collocation - Application Fee			CLOAC	PE1JB		2,973.00		0.9475							
		Adjacent Collocation - 120V, Single Phase Standby Power Rate per AC Breaker Amp			CLOAC	PE1FB	5.81										
		Adjacent Collocation - 240V, Single Phase Standby Power Rate per AC Breaker Amp			CLOAC	PE1FD	11.64										
		Adjacent Collocation - 120V, Three Phase Standby Power Rate per AC Breaker Amp			CLOAC	PE1FE	17.45										
		Adjacent Collocation - 277V, Three Phase Standby Power Rate per AC Breaker Amp			CLOAC	PE1FG	40.30										
PHYSICAL COLLOCATION IN THE REMOTE SITE																	
		Physical Collocation in the Remote Site - Application Fee			CLORS	PE1RA		580.20		312.76							
		Cabinet Space in the Remote Site per Bay/ Rack			CLORS	PE1RB	220.41										
		Physical Collocation in the Remote Site - Security Access - Key			CLORS	PE1RD		24.69									
		Physical Collocation in the Remote Site - Space Availability Report per Premises Requested			CLORS	PE1SR		218.49									
		Physical Collocation in the Remote Site - Remote Site CLLI Code Request, per CLLI Code Requested			CLORS	PE1RE		70.81									
		Remote Site DLEC Data (BRSDD), per Compact Disk, per CO			CLORS	PE1RR		234.15									
PHYSICAL COLLOCATION IN THE REMOTE SITE - ADJACENT																	
		Remote Site-Adjacent Collocation - AC Power, per breaker amp			CLORS	PE1RS	6.27										
		Remote Site-Adjacent Collocation - Real Estate, per square foot			CLORS	PE1RT	0.134										
		Remote Site-Adjacent Collocation-Application Fee			CLORS	PE1RU		755.62	755.62								
	NOTE: If Security Escort and/or Add'l Engineering Fees become necessary for remote site collocation, the Parties will negotiate appropriate rates.																

ATTACHMENT 5

ACCESS TO NUMBERS AND NUMBER PORTABILITY

TABLE OF CONTENTS

1. NON-DISCRIMINATORY ACCESS TO TELEPHONE NUMBERS.....3

2. NUMBER PORTABILITY PERMANENT SOLUTION.....3

3. SERVICE PROVIDER NUMBER PORTABILITY 4

4. SPNP IMPLEMENTATION 5

5. OPERATIONAL SUPPORT SYSTEM (OSS) RATES ……12
Rates…….Exhibit A

ACCESS TO NUMBERS AND NUMBER PORTABILITY

1. NON-DISCRIMINATORY ACCESS TO TELEPHONE NUMBERS

1.1 During the term of this Agreement, where Talk America is utilizing its own switch, Talk America shall contact the North American Numbering Plan Administrator, Neustar, for the assignment of numbering resources. In order to be assigned a Central Office Code, Talk America will be required to complete the Central Office Code (NXX) Assignment Request and Confirmation Form (Code Request Form) in accordance with Industry Numbering Committee's Central Office Code (NXX) Assignment Guidelines (INC 95-0407-008).

1.2 Where BellSouth is providing local switching, Talk America may utilize BellSouth's telephone numbers. BellSouth will provide Talk America with on line access to telephone numbers on a first come first served basis. Assignment, reservation and use of telephone numbers shall be governed by applicable FCC rules and regulations.

1.3 Talk America acknowledges that there may be instances where there is a shortage of telephone numbers in a particular Common Language Location Identifier Code (CLLIC); and in such instances, Talk America shall return numbers to BellSouth upon BellSouth's request. BellSouth shall make all such requests on a nondiscriminatory basis.

2. NUMBER PORTABILITY PERMANENT SOLUTION

2.1 The Parties will offer local number portability in accordance with rules, regulations and guidelines adopted by the Commission, the FCC and industry fora. Interim Service Provider Number Portability (SPNP) will be available only in those end offices where no carrier has requested implementation of permanent local number portability (PNP). Once PNP is implemented in an end office pursuant to the request of a carrier, both Parties must withdraw their SPNP offerings. The transition from existing SPNP arrangements to PNP shall occur within ninety (90) days from the date PNP is implemented in the end office. Neither Party shall charge the other Party for conversion from SPNP to PNP.

2.2 <u>End User Line Charge</u>. Where Talk America subscribes to BellSouth's local switching, BellSouth shall bill and Talk America shall pay the end user line charge associated with implementing PNP as set forth in BellSouth's FCC Tariff No. 1. This charge is not subject to the resale discount set forth in Attachment 1 of this Agreement.

2.3 To limit service outage, BellSouth and Talk America will adhere to the process flows and cutover guidelines for porting numbers as outlined in the LNP Reference

Guide, as amended from time to time. The LNP Reference Guide, incorporated herein by reference, is accessible via the Internet at the following site: http://www.interconnection.bellsouth.com. All intervals referenced in the LNP Reference Guide shall apply to both BellSouth and Talk America.

2.4 The Parties will set Local Routing Number (LRN) unconditional or 10-digit triggers where applicable. Where triggers are set, the porting Party will remove the ported number at the same time the trigger is removed.

2.5 A trigger order is a service order issued in advance of the porting of a number. A trigger order 1) initiates call queries to the AIN SS7 network in advance of the number being ported; and 2) provides for the new service provider to be in control of when a number ports.

2.6 Where triggers are not set, the Parties shall coordinate the porting of the number between service providers so as to minimize service interruptions to the end user.

2.7 BellSouth and Talk America will work cooperatively to implement changes to PNP process flows ordered by the FCC or as recommended by standard industry forums addressing PNP.

3. SERVICE PROVIDER NUMBER PORTABILITY

3.1 Where PNP has not been implemented in an end office, the Parties shall provide SPNP. SPNP is a service arrangement whereby an end user who switches subscription of his local exchange service from BellSouth to a CLEC, or vice versa, is permitted to retain the use of his existing assigned telephone number, provided that the end user remains at the same location for his local exchange service or changes locations and service providers but stays within the same BellSouth local calling area of his existing number. Except as otherwise expressly provided herein, SPNP is available only where the local exchange carrier is currently providing basic local exchange service to the end user. SPNP for a particular assigned telephone number will be disconnected when any end user, Commission, BellSouth, or CLEC initiated activity (e.g., a change in exchange boundaries) would normally result in a telephone number change had the end user retained his initial local exchange service.

3.2 Methods of Providing SPNP. SPNP is available through either remote call forwarding or direct inward dialing trunks. Remote call forwarding (SPNP-RCF) is an existing switch-based service that redirects calls within the telephone network. Direct inward dialing trunks (SPNP-DID) allow calls to be routed over a dedicated facility to the switch that serves the subscriber.

3.3 Signaling Requirements. SS7 Signaling is required for the provision of SPNP services.

3.4 Rates

3.4.1 Rates for SPNP are set out in Exhibit A to this Attachment. If no rate is identified in the Attachment, the rate for the specific service or function will be as set forth in applicable BellSouth tariff or as negotiated by the Parties upon request by either Party.

4. SPNP IMPLEMENTATION

4.1 SPNP-RCF is a telecommunications service whereby a call dialed to an SPNP-RCF equipped telephone number is automatically forwarded to an assigned seven- or ten- digit telephone number within the local calling area as defined in BellSouth's General Subscriber Services Tariff. The forwarded-to number shall be specified by Talk America or BellSouth, as appropriate. The forwarding Party will provide identification of the originating telephone number, via SS7 signaling, to the receiving Party. Identification of the originating telephone number to the SPNP-RCF end user cannot be guaranteed, however. SPNP-RCF provides a single call path for the forwarding of no more than one call to the receiving Party's specified forwarded-to number. Additional call paths for the forwarding of multiple simultaneous calls are available on a per path basis at rates as outlined in this Attachment.

4.2 SPNP-DID service provides trunk side access to end office switches for direct inward dialing to the other Party's premises equipment from the telecommunications network to lines associated with the other Party's switching equipment and must be provided on all trunks in a group arranged for inward service. SPNP-DID is available from BellSouth on a per DS0, DS1 or DS3 basis. A SPNP-DID trunk termination charge, provided with SS7 Signaling only, applies for each trunk voice grade equivalent. In addition, direct facilities are required from the end office where a ported number resides to the end office serving the ported end user customer. The rates for a switched local channel and switched dedicated transport apply as contained in BellSouth's Intrastate Access Services tariff, as amended from time to time. Transport mileage will be calculated as the airline distance between the end office where the number is ported and the Point of Interface ("POI") using the V&H coordinate method. SPNP-DID must be established with a minimum configuration of two channels and one unassigned telephone number per switch, per arrangement for control purposes. Transport facilities arranged for SPNP-DID may not be mixed with any other type of trunk group, with no outgoing calls placed over said facilities. SPNP-DID will be provided only where such facilities are available and where the switching equipment of the ordering Party is properly equipped. Where SPNP-DID service is required from more than one wire center or from separate trunk groups within the same wire center, such service provided from each wire center or each trunk group within the same wire center shall be considered a separate service. Only customer-dialed sent-paid calls will be completed to the first number of a SPNP-DID number group; however, there are no restrictions on calls completed to other

numbers of a SPNP-DID number group. Sent-paid calls refer to those calls placed by an end user who physically deposits currency in a public telephone. Interface group arrangements provided for terminating the switched transport at the Party's terminal location are as set forth in of BellSouth's Intrastate Access Services Tariff, § E6.1.3.A as amended from time to time.

4.3 SPNP-DID Service requires ordering consecutive telephone numbers in blocks of twenty. Talk America may order non-consecutive telephone numbers or telephone numbers in less than blocks of twenty pursuant to BellSouth's tariffs.

4.4 The calling Party shall be responsible for payment of the applicable charges for sent-paid calls to the SPNP number. For collect, third-party, or other operator-assisted non-sent paid calls to the ported telephone number, BellSouth or Talk America shall be responsible for the payment of charges under the same terms and conditions for which the end user would have been liable for those charges. Either Party may request that the other block collect and third party non-sent paid calls to the SPNP-assigned telephone number. If a Party does not request blocking, the other Party will provide itemized local usage detail for the billing of non-sent paid calls on the monthly bill of usage charges provided at the individual end user account level. The detail will include itemization of all billable usage. Each Party shall have the option of receiving this usage data on a daily basis via a data file transfer arrangement. This arrangement will utilize the existing industry uniform standard, known as EMI standards, for exchange of billing data. Files of usage data will be created daily for the optional service. Usage originated and recorded in the sending BellSouth RAO will be provided in unrated or rated format, depending on processing system. Talk America usage originated elsewhere and delivered via CMDS to the sending BellSouth RAO shall be provided in rated format.

4.5 The new service provider shall be responsible for obtaining authorization from the end user for the handling of the disconnection of the end user's service, the provision of new local service and the provision of SPNP services. Each Party shall be responsible for coordinating the provision of service with the other to assure that its switch is capable of accepting SPNP ported traffic. Each Party shall be solely responsible to ensure that its facilities, equipment and services do not interfere with or impair any facility, equipment, or service of the other Party or any of its end users. In the event that either Party determines in its reasonable judgment that the other Party will likely impair or is impairing, or interfering with any equipment, facility or service or any of its end users, that Party may either refuse to provide SPNP service or may terminate SPNP service to the other Party after providing appropriate notice.

4.6 Each Party shall be responsible for providing an appropriate intercept announcement service for any telephone numbers subscribed to SPNP-DID services for which it is not presently providing local exchange service or terminating to an end user. Where either Party chooses to disconnect or terminate any SPNP service, that Party shall be responsible for designating the preferred standard type of announcement to be provided.

4.7 End-to-end transmission characteristics may vary depending on the distance and routing necessary to complete calls over SPNP facilities and the fact that another carrier is involved in the provisioning of service. Neither Party shall specify end-to-end transmission characteristics for SPNP calls.

4.8 Where SPNP-RCF is utilized for SPNP, for terminating IXC traffic ported to either Party which requires use of either Party's tandem switching, the tandem provider will bill the IXC tandem switching, the interconnection charge, and a portion of the transport, and the other Party will bill the IXC local switching, the carrier common line and a portion of the transport. If the tandem provider is unable to provide the necessary access records to permit the other Party to bill the IXC directly for terminating access to ported numbers, then the tandem provider will bill the IXC full terminating switched access charges at the tandem provider's rate and will compensate the other Party at the tandem Party's tariff rates via a process used by BellSouth to estimate the amount of ported switched access revenues due the other Party. If an intraLATA toll call is delivered, the delivering Party will pay terminating access rates to the other Party.

5. OPERATIONAL SUPPORT SYSTEM (OSS) RATES

5.1 The terms, conditions and rates for OSS are as set forth in Attachment 2.

INTERIM SERVICE PROVIDER NUMBER PORTABILITY - Alabama														Attachment: 5		Exhibit: A	
CATEGORY		RATE ELEMENTS	Interim	Zone	BCS	USOC	RATES($)					Svc Order Submitted Elec per LSR	Svc Order Submitted Manually per LSR	Incremental Charge - Manual Svc Order vs. Electronic-1st	Incremental Charge - Manual Svc Order vs. Electronic-Add'l	Incremental Charge - Manual Svc Order vs. Electronic-Disc 1st	Incremental Charge - Manual Svc Order vs. Electronic-Disc Add'l
							Recurring	Nonrecurring		Nonrecurring Disconnect		OSS Rates($)					
								First	Add'l	First	Add'l	SOMEC	SOMAN	SOMAN	SOMAN	SOMAN	SOMAN
INTERIM SERVICE PROVIDER NUMBER PORTABILITY																	
		RCF, per number ported (Business Line)				TNPBL	2.13	0.65		0.07		3.50		19.99	19.99	19.99	19.99
		RCF, per number ported (Residence Line)				TNPRL	2.13	0.65		0.07		3.50		19.99	19.99	19.99	19.99
		RCF, add'l capacity for simultaneous call forwarding, per additional path					0.32										
		RCF, per service order, per location (Business)				TNPBD		1.44	1.44	1.44	1.44	3.50		19.99	19.99	19.99	19.99
		RCF, per service order, per location (Residence)				TNPRD		1.44	1.44	1.44	1.44	3.50		19.99	19.99	19.99	19.99
INTERIM SERVICE PROVIDER NUMBER PORTABILITY - DID																	
		DID per number ported (Residence)				TNPDR		1.18		1.18		3.50		19.99	19.99	19.99	19.99
		DID per number ported (Business)				TNPDB		1.18		1.18		3.50		19.99	19.99	19.99	19.99
		DID per service order, per location (Residence)				TNPRD		1.44	1.44	1.44	1.44	3.50		19.99	19.99	19.99	19.99
		DID per service order, per location (Business)				TNPBD		1.44	1.44	1.44	1.44	3.50		19.99	19.99	19.99	19.99
		DID, per trunk termination, Initial				TNPT2	11.84	173.73	51.00	50.43	25.00	3.50		19.99	19.99	19.99	19.99
	Note: If no rate is identified in the contract, the rate for the specific service or function will be as set forth in applicable BellSouth tariff or as negotiated by the Parties upon request by either Party.																
	NOTE: Any element that can be ordered electronically will be billed according to the SOMEC rate listed. Please refer to BellSouth's Business Rules for Local Ordering (BBR-LO) to determine if a product can be ordered electronically. For those elements that cannot be ordered electronically at present per the BBR-LO, the listed SOMEC rate reflects the charge that would be billed to a CLEC once electronic ordering capabilities come on-line for that element. Otherwise, the manual ordering charge, SOMAN, will be																

INTERIM SERVICE PROVIDER NUMBER PORTABILITY - Florida														Attachment: 5		Exhibit: A	
CATEGORY		RATE ELEMENTS	Interim	Zone	BCS	USOC	RATES($)					Svc Order Submitted Elec per LSR	Svc Order Submitted Manually per LSR	Incremental Charge - Manual Svc Order vs. Electronic-1st	Incremental Charge - Manual Svc Order vs. Electronic-Add'l	Incremental Charge - Manual Svc Order vs. Electronic-Disc 1st	Incremental Charge - Manual Svc Order vs. Electronic-Disc Add'l
							Recurring	Nonrecurring		Nonrecurring Disconnect		OSS Rates($)					
								First	Add'l	First	Add'l	SOMEC	SOMAN	SOMAN	SOMAN	SOMAN	SOMAN
INTERIM SERVICE PROVIDER NUMBER PORTABILITY - RCF																	
		RCF, per number ported (Business Line)				TNPBL	2.05	0.4145	0.4145	0.0415	0.0415	3.50	11.90			1.83	
		RCF, per number ported (Residence Line)				TNPRL	2.05	0.4145	0.4145	0.0415	0.0415	3.50	11.90			1.83	
		RCF, Per Additional Path					0.7179										
INTERIM SERVICE PROVIDER NUMBER PORTABILITY - DID																	
		DID per number ported (Residence)				TNPDR		0.6923	0.6923	0.6923	0.6923	3.50	11.90			1.83	
		DID per number ported (Business)				TNPDB		0.6923	0.6923	0.6923	0.6923	3.50	11.90			1.83	
		DID, per trunk termination, Initial				TNPT2	54.95	161.29	80.58	32.73	32.73	3.50	11.90			1.83	
SERVICE PROVIDER NUMBER PORTABILITY (RIPH)																	
		RIPH, Functionality, Per Rearrangement						20.08	20.08			3.50	11.90			1.83	
		RIPH, Per Number Ported					1.83	0.2165	0.2165	0.0216	0.0216	3.50	11.90			1.83	
		RIPH, Functionality, Per Central Ofc						90.47	90.47	2.54	2.54	3.50	11.90			1.83	
	NOTE: Any element that can be ordered electronically will be billed according to the SOMEC rate listed. Please refer to BellSouth's Business Rules for Local Ordering (BBR-LO) to determine if a product can be ordered electronically. For those elements that cannot be ordered electronically at present per the BBR-LO, the listed SOMEC rate reflects the charge that would be billed to a CLEC once electronic ordering capabilities come on-line for that element. Otherwise, the manual ordering charge, SOMAN, will be																

INTERIM SERVICE PROVIDER NUMBER PORTABILITY - Georgia														Attachment: 5		Exhibit: A	
CATEGORY		RATE ELEMENTS	Interim	Zone	BCS	USOC	RATES($)					Svc Order Submitted Elec per LSR	Svc Order Submitted Manually per LSR	Incremental Charge - Manual Svc Order vs. Electronic-1st	Incremental Charge - Manual Svc Order vs. Electronic-Add'l	Incremental Charge - Manual Svc Order vs. Electronic-Disc 1st	Incremental Charge - Manual Svc Order vs. Electronic-Disc Add'l
							Recurring	Nonrecurring		Nonrecurring Disconnect		OSS Rates($)					
								First	Add'l	First	Add'l	SOMEC	SOMAN	SOMAN	SOMAN	SOMAN	SOMAN
INTERIM SERVICE PROVIDER NUMBER PORTABILITY - RCF																	
		RCF, per number ported (Business Line)				TNPBL	2.03	0.51				3.50		18.94	18.94		
		RCF, per number ported (Residence Line)				TNPRL	2.03	0.51				3.50		18.94	18.94		
		RCF, add'l capacity for simultaneous call forwarding, per additional path					0.2836										
		RCF, per service order, per location (Business)				TNPBD		2.10	2.10			3.50		18.94	18.94		
		RCF, per service order, per location (Residence)				TNPRD		2.10	2.10			3.50		18.94	18.94		
INTERIM SERVICE PROVIDER NUMBER PORTABILITY - DID																	
		DID per number ported (Residence)				TNPDR		0.93				3.50		18.94	18.94		
		DID per number ported (Business)				TNPDB		0.93				3.50		18.94	18.94		
		DID per service order, per location (Residence)				TNPRD		2.10	2.10			3.50		18.94	18.94		
		DID per service order, per location (Business)				TNPBD		2.10	2.10			3.50		18.94	18.94		
		DID, per trunk termination, Initial				TNPT2	10.73	135.47	40.00			3.50		18.94	18.94		
	Note: If no rate is identified in the contract, the rate for the specific service or function will be as set forth in applicable BellSouth tariff or as negotiated by the Parties upon request by either Party.																
	NOTE: Any element that can be ordered electronically will be billed according to the SOMEC rate listed. Please refer to BellSouth's Business Rules for Local Ordering (BBR-LO) to determine if a product can be ordered electronically. For those elements that cannot be ordered electronically at present per the BBR-LO, the listed SOMEC rate reflects the charge that would be billed to a CLEC once electronic ordering capabilities come on-line for that element. Otherwise, the manual ordering charge, SOMAN, will be																

INTERIM SERVICE PROVIDER NUMBER PORTABILITY - Kentucky														Attachment: 5		Exhibit: A	
CATEGORY		RATE ELEMENTS	Interim	Zone	BCS	USOC	RATES($)					Svc Order Submitted Elec per LSR	Svc Order Submitted Manually per LSR	Incremental Charge - Manual Svc Order vs. Electronic-1st	Incremental Charge - Manual Svc Order vs. Electronic-Add'l	Incremental Charge - Manual Svc Order vs. Electronic-Disc 1st	Incremental Charge - Manual Svc Order vs. Electronic-Disc Add'l
							Recurring	Nonrecurring		Nonrecurring Disconnect		OSS Rates($)					
								First	Add'l	First	Add'l	SOMEC	SOMAN	SOMAN	SOMAN	SOMAN	SOMAN
	NOTE: BellSouth and CLEC will each bear their own costs of providing remote call forwarding as an interim number portability option.																

INTERIM SERVICE PROVIDER NUMBER PORTABILITY - Louisiana														Attachment: 5		Exhibit: A	
CATEGORY		RATE ELEMENTS	Interim	Zone	BCS	USOC	RATES($)					Svc Order Submitted Elec per LSR	Svc Order Submitted Manually per LSR	Incremental Charge - Manual Svc Order vs. Electronic-1st	Incremental Charge - Manual Svc Order vs. Electronic-Add'l	Incremental Charge - Manual Svc Order vs. Electronic-Disc 1st	Incremental Charge - Manual Svc Order vs. Electronic-Disc Add'l
							Recurring	Nonrecurring		Nonrecurring Disconnect		OSS Rates($)					
								First	Add'l	First	Add'l	SOMEC	SOMAN	SOMAN	SOMAN	SOMAN	SOMAN
INTERIM SERVICE PROVIDER NUMBER PORTABILITY - RCF																	
		RCF, per number ported (Business Line)				TNPBL	2.91	0.25	0.25			3.50	15.20				
		RCF, per number ported (Residence Line)				TNPRL	2.91	0.25	0.25			3.50	15.20				
		RCF, Per Additional Path					1.24										
INTERIM SERVICE PROVIDER NUMBER PORTABILITY - DID																	
		DID per number ported (Residence)				TNPDR		0.42	0.42			3.50	15.20				
		DID per number ported (Business)				TNPDB		0.42	0.42			3.50	15.20				
		DID, per trunk termination, Initial				TNPT2	68.47	185.13	68.79			3.50	15.20				
SERVICE PROVIDER NUMBER PORTABILITY (RIPH)																	
		RIPH, Functionality, Per Rearrangement						19.24	19.24			3.50	15.20				
		RIPH, Per Number Ported					1.62	0.19	0.19			3.50	15.20				
		RIPH, Functionality, Per Central Ofc						79.67	79.67			3.50	15.20				
	Note: If no rate is identified in the contract, the rate for the specific service or function will be as set forth in applicable BellSouth tariff or as negotiated by the Parties upon request by either Party.																
	NOTE: Any element that can be ordered electronically will be billed according to the SOMEC rate listed. Please refer to BellSouth's Business Rules for Local Ordering (BBR-LO) to determine if a product can be ordered electronically. For those elements that cannot be ordered electronically at present per the BBR-LO, the listed SOMEC rate reflects the charge that would be billed to a CLEC once electronic ordering capabilities come on-line for that element. Otherwise, the manual ordering charge, SOMAN, will be																

INTERIM SERVICE PROVIDER NUMBER PORTABILITY - Mississippi														Attachment: 5		Exhibit: A	
CATEGORY		RATE ELEMENTS	Interim	Zone	BCS	USOC	RATES($)					Svc Order Submitted Elec per LSR	Svc Order Submitted Manually per LSR	Incremental Charge - Manual Svc Order vs. Electronic-1st	Incremental Charge - Manual Svc Order vs. Electronic-Add'l	Incremental Charge - Manual Svc Order vs. Electronic-Disc 1st	Incremental Charge - Manual Svc Order vs. Electronic-Disc Add'l
							Recurring	Nonrecurring		Nonrecurring Disconnect		OSS Rates($)					
								First	Add'l	First	Add'l	SOMEC	SOMAN	SOMAN	SOMAN	SOMAN	SOMAN
INTERIM SERVICE PROVIDER NUMBER PORTABILITY - RCF																	
		RCF, per number ported (Business Line)				TNPBL	3.08	0.2596	0.2596	0.0282	0.0282	3.50	15.75				
		RCF, per number ported (Residence Line)				TNPRL	3.08	0.2596	0.2596	0.0282	0.0282	3.50	15.75				
		RCF, Per Additional Path					1.17										
INTERIM SERVICE PROVIDER NUMBER PORTABILITY - DID																	
		DID per number ported (Residence)				TNPDR		0.4335	0.4335	0.4701	0.4701	3.50	15.75				
		DID per number ported (Business)				TNPDB		0.4335	0.4335	0.4701	0.4701	3.50	15.75				
		DID, per trunk termination, Initial				TNPT2	58.41	191.75	71.25	28.94	28.94	3.50	15.75				
SERVICE PROVIDER NUMBER PORTABILITY (RIPH)																	
		RIPH, Functionality, Per Rearrangement						19.93	19.93			3.50	15.75				
		RIPH, Per Number Ported					1.96	0.1972	0.1972	0.0214	0.0214	3.50	15.75				
		RIPH, Functionality, Per Central Ofc						85.52	85.52	2.51	2.51	3.50	15.75				
	NOTE: Any element that can be ordered electronically will be billed according to the SOMEC rate listed. Please refer to BellSouth's Business Rules for Local Ordering (BBR-LO) to determine if a product can be ordered electronically. For those elements that cannot be ordered electronically at present per the BBR-LO, the listed SOMEC rate reflects the charge that would be billed to a CLEC once electronic ordering capabilities come on-line for that element. Otherwise, the manual ordering charge, SOMAN, will be																

INTERIM SERVICE PROVIDER NUMBER PORTABILITY - North Carolina														Attachment: 5		Exhibit: A	
CATEGORY		RATE ELEMENTS	Interim	Zone	BCS	USOC	RATES($)					Svc Order Submitted Elec per LSR	Svc Order Submitted Manually per LSR	Incremental Charge - Manual Svc Order vs. Electronic-1st	Incremental Charge - Manual Svc Order vs. Electronic-Add'l	Incremental Charge - Manual Svc Order vs. Electronic-Disc 1st	Incremental Charge - Manual Svc Order vs. Electronic-Disc Add'l
							Recurring	Nonrecurring		Nonrecurring Disconnect		OSS Rates($)					
								First	Add'l	First	Add'l	SOMEC	SOMAN	SOMAN	SOMAN	SOMAN	SOMAN
INTERIM SERVICE PROVIDER NUMBER PORTABILITY - RCF																	
		RCF, per number ported (Business Line)				TNPBL	1.66	0.71		0.50		3.50		19.99	19.99	19.99	19.99
		RCF, per number ported (Residence Line)				TNPRL	1.66	0.71		0.50		3.50		19.99	19.99	19.99	19.99
		RCF, add'l capacity for simultaneous call forwarding, per additional path					0.32										
		RCF, per service order, per location (Business)				TNPBD		2.73	2.73			3.50		19.99	19.99	19.99	19.99
		RCF, per service order, per location (Residence)				TNPRD		2.73	2.73			3.50		19.99	19.99	19.99	19.99
INTERIM SERVICE PROVIDER NUMBER PORTABILITY - DID																	
		DID per number ported (Residence)				TNPDR		2.25				3.50		19.99	19.99	19.99	19.99
		DID per number ported (Business)				TNPDB		2.25				3.50		19.99	19.99	19.99	19.99
		DID per service order, per location (Residence)				TNPRD		2.73	2.73			3.50		19.99	19.99	19.99	19.99
		DID per service order, per location (Business)				TNPBD		2.73	2.73			3.50		19.99	19.99	19.99	19.99
		DID, per trunk termination, Initial				TNPT2	11.43	217.88	74.00			3.50		19.99	19.99	19.99	19.99
	Note: If no rate is identified in the contract, the rate for the specific service or function will be as set forth in applicable BellSouth tariff or as negotiated by the Parties upon request by either Party.																
	NOTE: Any element that can be ordered electronically will be billed according to the SOMEC rate listed. Please refer to BellSouth's Business Rules for Local Ordering (BBR-LO) to determine if a product can be ordered electronically. For those elements that cannot be ordered electronically at present per the BBR-LO, the listed SOMEC rate reflects the charge that would be billed to a CLEC once electronic ordering capabilities come on-line for that element. Otherwise, the manual ordering charge, SOMAN, will be																

INTERIM SERVICE PROVIDER NUMBER PORTABILITY - South Carolina														Attachment: 5		Exhibit: A	
CATEGORY		RATE ELEMENTS	Interim	Zone	BCS	USOC	RATES($)					Svc Order Submitted Elec per LSR	Svc Order Submitted Manually per LSR	Incremental Charge - Manual Svc Order vs. Electronic-1st	Incremental Charge - Manual Svc Order vs. Electronic-Add'l	Incremental Charge - Manual Svc Order vs. Electronic-Disc 1st	Incremental Charge - Manual Svc Order vs. Electronic-Disc Add'l
							Recurring	Nonrecurring		Nonrecurring Disconnect		OSS Rates($)					
								First	Add'l	First	Add'l	SOMEC	SOMAN	SOMAN	SOMAN	SOMAN	SOMAN
INTERIM SERVICE PROVIDER NUMBER PORTABILITY - RCF																	
		RCF, per number ported (Business Line)				TNPBL	2.68	0.26	0.26	0.03	0.03	3.50	15.69				
		RCF, per number ported (Residence Line)				TNPRL	2.68	0.26	0.26	0.03	0.03	3.50	15.69				
		RCF, Per Additional Path					1.04										
		RCF, add'l capacity for simultaneous call forwarding, per additional path					0.3854										
		RCF, per service order, per location (Business)				TNPBD		1.37	1.37	44.70	44.70	3.50	15.69				
		RCF, per service order, per location (Residence)				TNPRD		1.37	1.37	44.70	44.70	3.50	15.69				
INTERIM SERVICE PROVIDER NUMBER PORTABILITY - DID																	
		DID per number ported (Residence)				TNPDR		0.43	0.43	0.47	0.47	3.50	15.69				
		DID per number ported (Business)				TNPDB		0.43	0.43	0.47	0.47	3.50	15.69				
		DID per service order, per location (Residence)				TNPRD		1.37	1.37	44.70	44.70	3.50	15.69				
		DID per service order, per location (Business)				TNPBD		1.37	1.37	44.70	44.70	3.50	15.69				
		DID, per trunk termination, Initial				TNPT2	73.62	191.07	191.07	28.84	28.84	3.50	15.69				
		DID, per trunk termination, Subsequent					73.62	71.00	71.00	28.84	28.84	3.50	15.69				
SERVICE PROVIDER NUMBER PORTABILITY (RIPH)																	
		RIPH, Functionality, Per Central Ofc						82.23	82.23	2.50	2.50	3.50	15.69				
		RIPH, Functionality, Per Rearrangement						19.86	19.86			3.50	15.69				
		RIPH, Per Number Ported					2.02	0.20	0.20	0.02	0.02	3.50	15.69				

Note: If no rate is identified in the contract, the rate for the specific service or function will be as set forth in applicable BellSouth tariff or as negotiated by the Parties upon request by either Party.

NOTE: Any element that can be ordered electronically will be billed according to the SOMEC rate listed. Please refer to BellSouth's Business Rules for Local Ordering (BBR-LO) to determine if a product can be ordered electronically. For those elements that cannot be ordered electronically at present per the BBR-LO, the listed SOMEC rate reflects the charge that would be billed to a CLEC once electronic ordering capabilities come on-line for that element. Otherwise, the manual ordering charge, SOMAN, will be

INTERIM SERVICE PROVIDER NUMBER PORTABILITY - Tennessee														Attachment: 5		Exhibit: A	
CATEGORY		RATE ELEMENTS	Interim	Zone	BCS	USOC	RATES($)					Svc Order Submitted Elec per LSR	Svc Order Submitted Manually per LSR	Incremental Charge - Manual Svc Order vs. Electronic-1st	Incremental Charge - Manual Svc Order vs. Electronic-Add'l	Incremental Charge - Manual Svc Order vs. Electronic-Disc 1st	Incremental Charge - Manual Svc Order vs. Electronic-Disc Add'l
							Recurring	Nonrecurring		Nonrecurring Disconnect		OSS Rates($)					
								First	Add'l	First	Add'l	SOMEC	SOMAN	SOMAN	SOMAN	SOMAN	SOMAN
INTERIM SERVICE PROVIDER NUMBER PORTABILITY - RCF																	
		RCF, per number ported (Business Line)				TNPBL	1.50										
		RCF, per number ported (Residence Line)				TNPRL	1.25										
		RCF, add'l capacity for simultaneous call forwarding, per additional path					0.50										
		RCF, per service order, per location (Business)				TNPBD		25.00	25.00			3.50		19.99	19.99	19.99	19.99
		RCF, per service order, per location (Residence)				TNPRD		25.00	25.00			3.50		19.99	19.99	19.99	19.99
	Note: If no rate is identified in the contract, the rate for the specific service or function will be as set forth in applicable BellSouth tariff or as negotiated by the Parties upon request by either Party.																
	NOTE: Any element that can be ordered electronically will be billed according to the SOMEC rate listed. Please refer to BellSouth's Business Rules for Local Ordering (BBR-LO) to determine if a product can be ordered electronically. For those elements that cannot be ordered electronically at present per the BBR-LO, the listed SOMEC rate reflects the charge that would be billed to a CLEC once electronic ordering capabilities come on-line for that element. Otherwise, the manual ordering charge, SOMAN, will be															

Attachment 6

Pre-Ordering, Ordering and Provisioning, Maintenance and Repair

TABLE OF CONTENTS

1. QUALITY OF PRE-ORDERING, ORDERING AND PROVISIONING, MAINTENANCE AND REPAIR **3**

2. ACCESS TO OPERATIONS SUPPORT SYSTEMS **3**

3. MISCELLANEOUS ORDERING AND PROVISIONING GUIDELINES **6**

PRE-ORDERING, ORDERING AND PROVISIONING, MAINTENANCE AND REPAIR

1. QUALITY OF PRE-ORDERING, ORDERING AND PROVISIONING, MAINTENANCE AND REPAIR

1.1 BellSouth shall provide pre-ordering, ordering and provisioning and maintenance and repair services to Talk America that are equivalent to the pre-ordering, ordering and provisioning and maintenance and repair services BellSouth provides to itself or any other CLEC. The guidelines for pre-ordering, ordering and provisioning and maintenance and repair are set forth in the various guides and business rules, as appropriate, and as they are amended from time to time during this Agreement. The guides and business rules are found at http://www.interconnection.bellsouth.com and are incorporated herein by reference. BellSouth will notify Talk America of any such amendments via the web and BellSouth will use best efforts to notify Talk America within thirty (30) days, but in no event will BellSouth make any changes without prior notification to Talk America.

1.2 BellSouth will provide provisioning services to Talk America during the same normal hours of operation that BellSouth provides itself, its end-users, and other CLECs. For purposes of this Agreement, BellSouth's regular working hours for provisioning are defined as follows:

Monday – Friday – 8:00 a.m. – 6:00 p.m. (Excluding Holidays)
(Resale/UNE non-coordinated, coordinated orders and order coordinated-time specific)

Saturday - 8:00 a.m. – 6:00 p.m. (Excluding Holidays)
(Resale/UNE non-coordinated orders)

1.2.1 The above hours represent the hours, either Eastern or Central Time, of where the physical work is being performed.

1.2.2 To the extent Talk America requests provisioning of service to be performed outside BellSouth's regular working hours, or the work so requested requires BellSouth's technicians to work outside regular working hours, overtime billing charges shall apply. Notwithstanding the foregoing, if such work is performed outside of regular working hours by a BellSouth technician during his or her scheduled shift and BellSouth does not incur any overtime charges in performing the work on behalf of Talk America, BellSouth will not assess Talk America additional charges beyond the rates and charges specified in this Agreement.

2. ACCESS TO OPERATIONS SUPPORT SYSTEMS

2.1 BellSouth shall provide Talk America access to operations support systems ("OSS") functions for pre-ordering, ordering and provisioning, maintenance and repair, and billing. BellSouth shall provide access to the OSS through manual and/or electronic interfaces as described in this Attachment. It is the sole responsibility of Talk America to obtain the technical capability to access and utilize BellSouth's OSS interfaces. Specifications for Talk America's access and use of BellSouth's electronic interfaces are set forth at www.interconnection.bellsouth.com and are incorporated herein by reference.

2.1.1 Pre-Ordering. In accordance with FCC and Commission rules and orders, BellSouth will provide electronic access to the following pre-ordering functions: service address validation, telephone number selection, service and feature availability, due date information, customer record information and loop makeup information. Access is provided through the Local Exchange Navigation System (LENS) interface and the Telecommunications Access Gateway (TAG) interface. Customer record information includes customer specific information in CRIS and RSAG. In addition, Talk America shall provide to BellSouth access to customer record information including electronic access where available. If electronic access is not available, Talk America shall provide paper copies of customer record information within the same intervals that BellSouth provides paper copies to Talk America. The Parties agree not to view, copy, or otherwise obtain access to the customer record information of any customer without that customer's permission. Talk America will obtain access to customer record information only in strict compliance with applicable laws, rules, or regulations of the State in which the service is provided.

2.1.1.1 The Parties acknowledge that ordering requirements necessitate the use of current, real time pre-order information to accurately build service orders. Each pre-order interface shall be available except for downtime attributable to maintenance and upload, twenty-four (24) hours a day, seven (7) days a week.

2.1.1.2 All CSR data exchanged must be in English text, and not only USOC or FID format, provided that such information is maintained in textual format by BellSouth. All other data shall be in a mutually agreed upon nomenclature.

2.1.1.3 Upon request, BellSouth shall provide Talk America with pre-order information in batch transmission to the extent available or provided to any other Telecommunications Carrier on the same terms and conditions and at the same rates.

2.1.1.4 Pre-ordering functions shall be provided at parity as measured by the Performance Measurement metrics included in Attachment 9 hereto.

2.1.2 Service Ordering. BellSouth will make available the Electronic Data Interchange (EDI) interface and the TAG ordering interface for the purpose of exchanging order information, including order status and completion notification, for non-complex and certain complex resale requests and certain network elements. Talk

America may integrate the EDI interface or the TAG ordering interface with the TAG pre-ordering interface. In addition, BellSouth will provide integrated pre-ordering and ordering capability through the LENS interface for non-complex and certain complex resale service requests and certain network element requests.

2.1.2.1 BellSouth shall provide to Talk America electronic and manual interfaces for transmitting orders and receiving Firm Order Confirmation ("FOC"), completion notices, Due-Date Jeopardies, and, as available, other provisioning data and information. BellSouth shall provide Talk America with a FOC for each Resale and UNE order. The FOC includes: purchase order number, telephone number, Local Service Request number, due date, and Service Order number.

2.1.2.2 The Parties agree that systems utilized for access to OSS shall be compliant with the most current policies and/or guidelines of the Ordering and Billing Forum (OBF) for electronic mapping.

2.1.3 Maintenance and Repair. BellSouth will offer Talk America with the same ability to report and monitor service troubles and repair services as it provides itself. Talk America may report and monitor service troubles and obtain repair services from BellSouth via electronic interfaces. BellSouth provides several options for electronic trouble reporting. For exchange services, BellSouth will offer Talk America non-discriminatory access to the Trouble Analysis Facilitation Interface (TAFI). In addition, BellSouth will offer an industry standard, machine-to-machine Electronic Communications Trouble Administration (ECTA) Gateway interface. For designed services, BellSouth will provide non-discriminatory trouble reporting via the ECTA Gateway. BellSouth will provide Talk America an estimated time to repair, an appointment time or a commitment time, as appropriate, on trouble reports. Requests for trouble repair will be billed in accordance with the provisions of this Attachment. BellSouth and Talk America agree to adhere to BellSouth's Operational Understanding, as amended from time to time during this Agreement and as incorporated herein by reference. The Operational Understanding may be accessed via the Internet at http://www.interconnection.bellsouth.com.

2.2 Change Management. BellSouth provides a collaborative process for change management of the electronic interfaces through the Change Control Process (CCP). Guidelines for this process are set forth in the CCP document as amended from time to time during this Agreement. The CCP document may be accessed via the Internet at http://www.interconnection.bellsouth.com.

2.3 BellSouth's Versioning Policy for Electronic Interfaces. BellSouth's Versioning Policy is part of the Change Control Process (CCP). Pursuant to the CCP, BellSouth will issue new software releases for new industry standards for its EDI and TAG electronic interfaces. The Versioning Policy, including the appropriate notification to Talk America, is set forth in the CCP document as amended from time to time during this Agreement. The CCP document may be accessed via the Internet at http://www.interconnection.bellsouth.com.

2.3.1 Migration of Talk America to New BellSouth Software Releases. BellSouth will issue new software releases for its electronic interfaces as needed to improve operations and meet standards and regulatory requirements. When a new release is implemented, BellSouth will continue to support both the new release (N) and the prior release (N-1). When BellSouth makes the next release (N+1), BellSouth will eliminate support for the (N-1) release and support the two newest releases (N and N+1). Thus, BellSouth will always support the two most current releases. BellSouth will issue documents to Talk America with sufficient notice to allow Talk America to make the necessary changes to its systems and operations to migrate to the newest release in a timely fashion. BellSouth will use its best efforts to issue such documents thirty (30) days in advance of changes.

2.4 Rates. Charges for use of OSS shall be as set forth in Attachments 1 and 2 of this Agreement and are incorporated herein by reference.

3. MISCELLANEOUS

3.1 Pending Orders. Orders placed in the hold or pending status by Talk America will be held for a maximum of thirty (30) days from the date the order is placed on hold. After such time, Talk America shall be required to submit a new service order. Incorrect or invalid orders returned to Talk America for correction or clarification will be held for thirty (30) days. If Talk America does not return a corrected order within thirty (30) days, BellSouth will cancel the order.

3.2 Single Point of Contact. Talk America will be the single point of contact with BellSouth for ordering activity for network elements and other services used by Talk America to provide services to its end users, except that BellSouth may accept an order directly from another CLEC, or BellSouth, acting with authorization of the affected end user. Talk America and BellSouth shall each execute a blanket letter of authorization with respect to customer orders. The Parties shall each be entitled to adopt their own internal processes for verification of customer authorization for orders, provided, however, that such processes shall comply with applicable state and federal law including, until superseded, the FCC guidelines and orders applicable to Presubscribed Interexchange Carrier (PIC) changes, including Un-PIC. Pursuant to an order from another carrier, BellSouth may disconnect any network element being used by Talk America to provide service to that end user and may reuse such network elements or facilities to enable such other carrier to provide service to the end user. BellSouth will notify Talk America within five (5) business days of service order completion that such a disconnect order has been processed, but will not be required to notify Talk America in advance of such processing.

3.3 Use of Facilities. When a customer of Talk America elects to discontinue service and transfer service to another local exchange carrier, including BellSouth, BellSouth shall have the right to reuse the facilities provided to Talk America by BellSouth. In addition, where BellSouth provides local switching, BellSouth may disconnect and reuse facilities when the facility is in a denied state and BellSouth

has received an order to establish new service or transfer of service from a customer or a customer's CLEC at the same address served by the denied facility. BellSouth will notify Talk America that such an order has been processed after the disconnect order has been completed. The processing flow of these orders will be done in a manner which does not intentionally cause any service disruption to Talk America's customer's services, unless otherwise applicable according to the ordering activity types. In the event that numerous unintentional errors occur, the Parities will meet to resolve such errors.

3.4 Contact Numbers. The Parties agree to provide one another with toll-free nation-wide (50 states) contact numbers for the purpose of ordering, provisioning and maintenance of services. The maintenance contact shall be available twenty-four (24) hours a day, seven (7) days a week.

3.5 Subscription Functions. In cases where BellSouth performs subscription functions for an interexchange carrier ("IXC") (i.e. PIC and LPIC changes via Customer Account Record Exchange (CARE)), BellSouth will provide the affected IXCs with the Operating Company Number (OCN) of the local provider for the purpose of obtaining end user billing account and other end user information required under subscription requirements.

3.6 Cancellation Charges. If Talk America cancels an order for Network Elements or other services, any costs incurred by BellSouth in conjunction with the provisioning of that order will be recovered in accordance with BellSouth's Private Line Tariff or BellSouth's FCC No. 1 Tariff, Section 5, as applicable.

3.7 Expedite Service Date Advancement Charges (a.k.a.Expedites). For expedited Service Date Advancement requests by Talk America, Service Date Advancement charges will apply for intervals less than the standard interval as outlined in the BellSouth Product and Services Interval Guide. The charges as outlined in the BellSouth's Private Line Tariff or BellSouth's FCC No. 1 Tariff, Section 5, will apply as applicable.

3.8 Ordering and Provisioning Information. BellSouth shall provide the following to Talk America upon request:

3.8.1 Design Layout Records ("DLRs") for designed unbundled Network Elements; and

3.8.2 Advance information on the details and requirements for planning and implementation of NPA splits.

3.9 Access to the Regional Street Address Guide ("RSAG") information via LENS or TAG pre-ordering. Non Proprietary RSAG subsets shall be made available pursuant to the Bona Fide Request ("BFR") process.

3.10 BellSouth and Talk America shall establish mutually acceptable methods and procedures for handling all misdirected calls from Talk America End Users. All misdirected calls to BellSouth from Talk America End Users shall be given a

recording (or a live statement) directing them to call a Talk America-designated toll free number. Talk America, on a reciprocal basis, shall refer all misdirected calls that Talk America receives from BellSouth End Users to a BellSouth-designated number. Talk America and BellSouth each shall be responsible for providing the other party with its current toll free number. The foregoing shall apply only when the Party receiving such call knows or has reason to know that the call is misdirected from an End User of the other Party hereto.

3.11 BellSouth shall provide order format specifications to Talk America for all available services, features, and functions and for ancillary data required by BellSouth to provision these services.

3.12 BellSouth shall provide Talk America with standard expected provisioning intervals for all unbundled Network Elements.

3.13 BellSouth shall not reconfigure any Talk America service arrangements of any Talk America End User for Resale services, UNEs or Combinations, unless so directed by Talk America. Any Talk America End User that contacts BellSouth regarding a change to its Talk America service (excluding changes in its local service provider) shall be advised to contact Talk America. Any BellSouth End User that contacts Talk America regarding a change in BellSouth service (excluding changes in its local service provider) shall be advised to contact BellSouth.

3.14 The Parties shall provide a generic intercept referral message that includes any new telephone number of an End User for the same period of time that BellSouth currently provides such a message for its own End Users. The intercept message shall be similar in format to the intercept referral message currently provided by BellSouth for its own End Users.

3.15 BellSouth shall perform all pre-testing necessary to ensure the services ordered meet the specifications outlined in the technical service description provided by BellSouth for the service being ordered.

3.16 Any written “leave behind” materials that BellSouth technicians provide to Talk America End Users shall be non-branded materials that do not identify the work being performed as being by BellSouth. These materials shall include, without limitation, non-branded forms for the Customer and non-branded “not at home” cards.

3.17 If a Talk America End User requests a change of service at the time of installation, BellSouth technicians shall direct them to contact Talk America directly and provide a toll-free number supplied by Talk America. When a BellSouth employee visits the premise of an Talk America End User, the BellSouth employee shall inform the Customer that he or she is there acting on behalf of Talk America.

3.18 BellSouth shall provide telephone and/or facsimile notification to Talk America of any Talk America end user service requests and charges therefor not authorized on

the Talk America service request, and obtain Talk America's approval prior to commencing work.

3.19 Each Party shall train and direct its employees who have contact with End Users of the other Party in the process of provisioning, maintenance or repair not to disparage the other Party or its services in any way to the other Party's End Users.

3.20 When Talk America places an LSR, Talk America shall specify a requested Due Date, and BellSouth shall specify a Due Date based on the applicable intervals. In the event Talk America's requested date is less than the standard interval, Talk America shall indicate on the LSR that an expedite is being requested and every attempt will be made for an earlier due date. This situation shall be considered an expedited order for which expedite charges will apply in accordance with BellSouth FCC No. 1 Tariff. BellSouth shall not complete the order prior to the Due Date unless authorized by Talk America. If BellSouth misses the Due Date, BellSouth shall promptly notify Talk America of the revised installation Due Date. If Talk America requests that an order be expedited, BellSouth shall notify Talk America of the due date on the FOC

3.21 Talk America and BellSouth shall agree to escalation procedures and contacts for resolving questions and disputes related to ordering and provisioning procedures or to the processing of individual orders, subject ultimately to the dispute resolution provisions of this Agreement. The Parties shall use best efforts to notify each other of any modifications to these contacts within ten (10) days of any such modifications.

3.21.1 Notwithstanding the foregoing, when the Local Carrier Service Center (LCSC) receives a call from Talk America regarding a Talk America order and the LCSC representative becomes aware that it will take longer than 15 minutes to resolve the matter, the LCSC representative will take the information and return Talk America's call with a resolution within the hour.

3.21.2 If a Talk America representative is on a call with a LCSC representative that takes longer than 15 minutes, Talk America will have the option to request the LCSC representative to call back within the hour with a resolution.

3.21.3 Talk America will also have the option of providing an LCSC representative with the information needed to research issues associated with up to five LSRs and request a return call from the LCSC representative within the hour with a resolution to each issue.

3.21.4 In any of the preceding instances, if Talk America does not receive a call from the LCSC within the hour, Talk America will escalate to the next level using the escalation procedures set forth in BellSouth's Interconnection website at http://www.interconnection.bellsouth.com/centers/html/atllcsc_esca.html

3.21.5 Furthermore, a Talk America requested due date will not be held in jeopardy as the result of delays caused by the LCSC in resolving an issue associated with a Talk

America LSR. Once the jeopardy reason is researched and explained as a valid jeopardy due to a CLEC reason, a SUP must be provided to BellSouth from Talk America with a new due date.

3.22 BellSouth shall transmit to Talk America a FOC or, in the alternative, notification of the lack of available facilities within time periods specified hereafter after BellSouth's receipt of a complete and correct order from Talk America, provided, however, that an order for complex services requiring a service inquiry shall be deemed received for these purposes only after completion of the service inquiry. The FOC shall contain a commitment date, which shall be established on a nondiscriminatory basis with respect to installation dates for comparable orders at such time. If Talk America uses LENS, EDI, or any other electronic interface for the submission of the order, the FOC or notification shall be posted by BellSouth in such interface within twenty-four (24) hours of receipt of the order. If Talk America does not use these interfaces, or these interfaces are not available for the service or UNE being ordered, BellSouth shall transmit the FOC or notification by telecopier to a toll-free number provided by Talk America within forty-eight (48) hours of BellSouth's receipt of the order. When Talk America submits a complete and correct LSR for SPNP and an associated unbundled Loop simultaneously, BellSouth shall likewise issue a FOC for both the Loop and the SPNP simultaneously.

3.23 For Local Service Requests submitted via an electronic interface, BellSouth shall notify Talk America via the same electronic interface, of Rejections/Errors contained in any of the data element(s) field(s) contained on any Talk America Local Service Request. For Local Service Requests submitted manually, BellSouth shall notify Talk America by facsimile of such Rejections and Errors. BellSouth will notify Talk America of Rejections or Errors in [Talk to remove this language "95% of"] mechanized orders within one (1) hour from BellSouth's receipt of the order. BellSouth will notify Talk America of Rejections or Errors in [Talk to remove this language "85% of"] non-mechanized and partially mechanized orders within forty-eight (48) hours from BellSouth's receipt of the order.

3.24 No manual ordering charges shall apply to local service request submitted by Talk America when BellSouth's existing electronic interfaces normally utilized by Talk America are unavailable for reasons other than scheduled maintenance or other scheduled activities for which advance notification is required and provided by BellSouth.

3.25 BellSouth shall accept any requests from Talk America to disconnect the service of an existing Talk America end user. BellSouth will not require end user confirmation prior to disconnection of the end user's service. If Talk America rescinds such disconnect order or issues a reconnect order within 24 hours of submission of the disconnect order, BellSouth shall use its best efforts to reconnect service within 24 hours.

3.26 Talk America may order from BellSouth multiple individual UNEs on a single order without the need for Talk America to send an order for each such UNE, if such UNEs are (i) for the same type of service, (ii) for the same location and (iii) for the same account.

3.27 BellSouth is working toward a single C order conversion process when converting a retail service to a UNE-P service; however, at present conversions require the processing of a new connect order and a separate disconnect order.

Attachment 7

Billing

TABLE OF CONTENTS

1. Payment and Billing Arrangements 3

2. Billing Disputes 7

3. RAO Hosting 8

4. Optional Daily Usage File 12

5. Access Daily Usage File 15

Rates……Exhibit A

BILLING

1. PAYMENT AND BILLING ARRANGEMENTS

All negotiated rates, terms and conditions set forth in this Attachment pertain to billing and billing accuracy certifications.

1.1 Billing. BellSouth agrees to provide billing through the Carrier Access Billing System (CABS) and through the Customer Records Information System (CRIS) depending on the particular service(s) that Talk America requests. BellSouth will bill and record in accordance with this Agreement those charges Talk America incurs as a result of Talk America purchasing from BellSouth Network Elements and Other Services as set forth in this Agreement. BellSouth will format all bills in CBOS Standard or CLUB/EDI format, depending on the type of service ordered. BellSouth's bills to Talk America for unbundled network elements and resold services purchased by Talk America shall include the item, quantity and price of such purchased services. For those services where standards have not yet been developed, BellSouth's billing format will change as necessary when standards are finalized by the Ordering and Billing Forum (OBF). Except as otherwise specified in the Agreement, the Parties agree that systems utilized for billing unbundled network elements and resold services shall be compliant with the most current policies and/or guidelines of the OBF. The Parties will work cooperatively to resolve adjustments or reconciliation arising from bill format issues.

1.1.1 For any service(s) BellSouth orders from Talk America, Talk America shall bill BellSouth in CABS format.

1.1.2 If either Party requests multiple billing media or additional copies of bills, the Billing Party will provide these at a reasonable cost.

1.1.3 BellSouth will bill Talk America in advance for all services to be provided during the ensuing billing period except charges associated with service usage, which will be billed in arrears. Charges will be calculated on an individual End User account level, including, if applicable, any charge for usage or usage allowances.

1.1.4 Any switched access charges associated with interexchange carrier access to the resold local exchange lines will be billed by, and due to, BellSouth.

1.1.5 BellSouth will not perform billing and collection services for Talk America as a result of the execution of this Agreement. All requests for billing services should be referred to the appropriate entity or operational group within BellSouth.

The Parties will be reasonable in working together to allow additional payment time for bills that are corrupt or distributed late (13 days past bill date). Bills are typically expected to be received by the billed Party within 6 days of the bill date. The billed Party will not contact the billing Party until 7 days after that time to

initiate consideration for additional payment time. Additional payment time will not be considered reasonable if the delay is caused by the delivery carrier, such as the U. S. Postal Service.

1.2 Master Account. After receiving certification as a local exchange company from the appropriate regulatory agency, Talk America will provide the appropriate BellSouth account manager the necessary documentation to enable BellSouth to establish a master account for Local Interconnection, Network Elements and Other Services, and/or resold services. Such documentation shall include the Application for Master Account, proof of authority to provide telecommunications services, an Operating Company Number (OCN) assigned by the National Exchange Carriers Association (NECA), Carrier Identification Code (CIC), Group Access Code (GAC), Access Customer Name and Abbreviation (ACNA) and a tax exemption certificate, if applicable.

1.2.1 Payment Responsibility. Payment of all charges less disputed amounts as described in section 2 of this Attachment billed by one Party will be the responsibility of other Party. Each Party shall make payment to the other Party. Neither Party is responsible for payments not received by the other Party from the other Party's customer. Neither Party will become involved in billing disputes that may arise between the other Party and the other Party's customer. Payments made to each Party as payment on account will be credited to an accounts receivable master account as directed by the other Party at the time of payment and not to an end user's account.

1.3 Payment Due. The payment will be due on or before the next bill date (i.e., same date in the following month as the bill date) and is payable in immediately available funds. Payment is considered to have been made when received by the billing Party. Payment shall be applied to billed Party's account on the date payment is received by the billing Party and not on the date that the payment is posted to billed Party's account. In the event payment is not applied to the billed Party's account on the date payment is received by the billing Party, any late fees assessed against such payment after the payment receipt date shall be credited.

1.3.1 If the payment due date falls on a Sunday or on a Holiday which is observed on a Monday, the payment due date shall be the first non-Holiday day following such Sunday or Holiday. If the payment due date falls on a Saturday or on a Holiday which is observed on Tuesday, Wednesday, Thursday, or Friday, the payment due date shall be the last non-Holiday day preceding such Saturday or Holiday. If payment is not received by the payment due date, a late payment charge, as set forth in Section 1.5, below, shall apply.

1.4 Tax Exemption. Upon proof of tax exempt certification from Talk America, the total amount billed to Talk America will not include those taxes or fees for which the CLEC is exempt. Applicable taxes charged to Talk America will be credited,

from the date the tax exemption certificate is received, where Talk America provides proof of tax exempt certification. Talk America will be solely responsible for the computation, tracking, reporting and payment of all taxes and like fees associated with the services provided to the end user of Talk America.

1.5 Late Payment. If any portion of the payment is received by either Party after the payment due date as set forth preceding, or if any portion of the payment is received by either Party in funds that are not immediately available to the receiving Party, then a late payment charge shall be due to the receiving Party. The late payment charge shall be the portion of the payment not received by the payment due date times a late factor or late payment interest rate plus any flat rate late payment fee as prescribed in the billing Party's tariffs and will be applied on a per bill basis. The late payment factor, late payment charge or late payment interest shall be as set forth in the following tariffs: for services purchased from the General Subscribers Services Tariff for purposes of resale and for ports and non-designed loops, Section A2 of the BellSouth General Subscriber Services Tariff; for services purchased from the Private Line Tariff for purposes of resale, Section B2 of the BellSouth Private Line Service Tariff; for network elements and other services and local interconnection charges billed to Talk America, Section E2 of the BellSouth Intrastate Access Tariff, or for local interconnection charges billed to BellSouth, the Payment Arrangement Section of the applicable Talk America state tariff or 1.5% in North Carolina. The Parties shall assess interest and/or late payment charges on previously assessed late payment charges only in a state where it has the authority pursuant to its tariffs. The Parties will be charged a fee for all returned checks as set forth in Section A2 of the BellSouth General Subscriber Services Tariff for Talk America returned checks or the Payment Arrangement Section of the applicable Talk America state tariff or $25.00 in North Carolina for BellSouth returned checks or pursuant to the applicable state law.

1.6 Discontinuing Service to Talk America. The procedures for discontinuing service to Talk America are as follows:

1.6.1 BellSouth reserves the right to suspend or terminate service for nonpayment of services pursuant to the terms hereof, or in the event of prohibited, unlawful or improper use of BellSouth facilities or service or any other violation or noncompliance by Talk America of the rules and regulations contained in BellSouth's tariffs.

1.6.2 If payment of amounts not subject to a billing dispute, as described in Section 2, is not received by the bill date in the month after the original bill date, BellSouth may provide written notice to Talk America that additional applications for service will be refused and that any pending orders for service will not be completed if payment is not received by the fifteenth day following the date of the notice. In addition, BellSouth may, at the same time, give thirty (30) days notice to Talk America at the billing address to discontinue the provision of existing services to Talk America at any time thereafter.

1.6.3 In the case of such discontinuance, all billed charges, as well as applicable termination charges, shall become due.

1.6.4 If BellSouth does not discontinue the provision of the services involved on the date specified in the thirty days notice and Talk America's noncompliance continues, nothing contained herein shall preclude BellSouth's right to discontinue the provision of the services to Talk America without further notice.

1.6.5 If payment is not received or reasonably satisfactory arrangements made for payment by the date given in the written notification, Talk America's services will be discontinued. Upon discontinuance of service on Talk America's account, service to Talk America's end users will be denied. BellSouth will reestablish service at the request of the end user or Talk America for BellSouth to reestablish service upon payment of the appropriate connection fee and subject to BellSouth's normal application procedures. Talk America is solely responsible for notifying the end user of the proposed service disconnection. If within fifteen (15) days after an end user's service has been denied and no arrangements to reestablish service have been made consistent with this subsection, the end user's service will be disconnected.

1.7 Deposit Policy. When purchasing services from BellSouth, Talk America will be required to complete the BellSouth Credit Profile and provide information regarding credit worthiness. Based on the results of the credit analysis, BellSouth reserves the right to secure the account with a suitable form of security deposit. Such security deposit shall take the form of cash, an Irrevocable Letter of Credit (BellSouth form), Surety Bond (BellSouth form) or, in its sole discretion, some other form of security. Any such security deposit shall in no way release Talk America from its obligation to make complete and timely payments of its bill. Such security shall be required prior to the inauguration of service. If, in the sole opinion of BellSouth, circumstances so warrant and/or gross monthly billing has increased beyond the level initially used to determine the level of security, BellSouth reserves the right to request additional security in a non discriminatory manner. Upon request of Talk America, BellSouth will review the circumstances upon which BellSouth has based the level of security and, if the circumstances so warrant, BellSouth will reduce the security provided by Talk America and, if the security is in the form of cash then a refund of the difference will be credited to Talk America's next bill. Interest on a security deposit, if provided in cash, shall accrue and be paid in accordance with the terms in the appropriate BellSouth tariff. Security deposits collected under this Section shall not exceed two months' estimated billing. In the event that a cash security deposit exceeds two months' estimated billing, BellSouth will lower the cash security deposit such that it no longer exceeds two months' estimated billing and refund the difference to Talk America by way of a credit to Talk America's next bill. In the event Talk America fails to remit to BellSouth any deposit requested pursuant to this Section, service to Talk America may be terminated in accordance with the terms of Section 1.6 of

this Attachment, and any security deposits will be applied to Talk America's account(s).

1.8 Notices. Notwithstanding anything to the contrary in this Agreement, all bills and notices regarding billing matters, including notices relating to security deposits, to rejection of additional orders from Talk America and to disconnection of services for nonpayment of charges, shall be forwarded to Finance Department, Talk America, 6805 Route 202, New Hope, PA 18938, (215) 862-1960 (facsimile) or to the individual and/or address subsequently provided by Talk America as the contact for billing information. All monthly bills and notices described in this Section shall be forwarded to the same individual and/or address; provided, however, a final notice of disconnection of services purchased by Talk America under this Agreement shall be sent via certified mail to the individual(s) listed in the Notices provision of the General Terms and Conditions of this Agreement at least 30 days before BellSouth takes any action to terminate such services.

1.9 Rates. Rates for Optional Daily Usage File (ODUF), Enhanced Optional Daily Usage File (EODUF), Access Daily Usage File (ADUF), and Centralized Message Distribution Service (CMDS) are set out in Exhibit A to this Attachment.

2. BILLING DISPUTES

2.1 Billing disputes shall be handled pursuant to the terms of this section.

Each Party agrees to notify the other Party in writing within a reasonable time upon the discovery of a billing dispute. In the event of a billing dispute, the Parties will endeavor to resolve the dispute within sixty (60) calendar days of the notification date.

2.1.1 If the dispute is not resolved within sixty (60) days of the dispute date, the dispute will be escalated to the second level of management for each of the respective Parties for resolution.

2.1.2 If the dispute is not resolved within ninety (90) days of the dispute date, the dispute will be escalated to the third level of management for each of the respective Parties for resolution.

2.1.3 If the dispute is not resolved within one hundred and twenty (120) days of the dispute date, the dispute will be escalated to the fourth level of management for each of the respective Parties for resolution.

2.1.4 If the dispute is not resolved within one hundred and fifty (150) days of the dispute date, then the aggrieved Party may pursue dispute resolution in accordance with the General Terms and Conditions of this Agreement.

2.1.5 For purposes of this Section 2, a billing dispute means a dispute of a specific

amount of money actually billed by either Party. The dispute must be clearly explained by the disputing Party and supported by written documentation, which clearly shows the basis for disputing charges. Notice of a dispute may be given by a Party at any time, either before or after an amount is paid, and a Party's payment of an amount shall not constitute a waiver of such Party's right to subsequently dispute its obligations to pay such amount or to seek a refund of any amount paid, in accordance with this Attachment. By way of example and not by limitation, a billing dispute will not include the refusal to pay all or part of a bill or bills when no written documentation is provided to support the dispute, nor shall a billing dispute include the refusal to pay other amounts owed by the billed Party until the dispute is resolved. Claims by the billed Party for damages of any kind will not be considered a billing dispute for purposes of this Section. Once the billing dispute is resolved, the disputing Party will make payment of any of the disputed amount owed to the billing Party by the next bill date or the billing Party shall have the right to pursue normal treatment procedures. Any credits due to the disputing Party, pursuant to the billing dispute, will be applied to the disputing Party's account by the billing Party by the next bill date upon resolution of the dispute.

2.2 In the event disputed charges are resolved in favor of the billed Party, the billed Party will receive credit for any late payment charge and/or late payment interest amounts assessed in connection with such disputed charges.

3. RAO HOSTING

3.1 RAO Hosting, Calling Card and Third Number Settlement System (CATS) and Non-Intercompany Settlement System (NICS) services provided to Talk America by BellSouth will be in accordance with the methods and practices regularly adopted and applied by BellSouth to its own operations during the term of this Agreement, including such revisions as may be made from time to time by BellSouth.

3.2 Talk America shall furnish all relevant information required by BellSouth for the provision of RAO Hosting, CATS and NICS.

3.3 Compensation amounts, if applicable, will be billed by BellSouth to Talk America on a monthly basis in arrears. Amounts due from one Party to the other (excluding adjustments) are payable within thirty (30) days of receipt of the billing statement.

3.4 Talk America must have its own unique hosted RAO code. Requests for establishment of RAO status where BellSouth is the selected CMDS interfacing host, require written notification from Talk America to the BellSouth RAO Hosting coordinator at least eight (8) weeks prior to the proposed effective date. The proposed effective date will be mutually agreed upon between the Parties with consideration given to time necessary for the completion of required Telcordia (formerly BellCore) functions. BellSouth will request the assignment of an RAO

code from its connecting contractor, currently Telcordia (formerly BellCore), on behalf of Talk America and will coordinate all associated conversion activities.

3.5 BellSouth will receive messages from Talk America that are to be processed by BellSouth, another LEC or CLEC in the BellSouth region or a LEC outside the BellSouth region.

3.6 BellSouth will perform invoice sequence checking, standard EMI format editing, and balancing of message data with the EMI trailer record counts on all data received from Talk America.

3.7 All data received from Talk America that is to be processed or billed by another LEC or CLEC within the BellSouth region will be distributed to that LEC or CLEC in accordance with the Agreement(s) which may be in effect between BellSouth and the involved LEC or CLEC.

3.8 All data received from Talk America that is to be placed on the CMDS network for distribution outside the BellSouth region will be handled in accordance with the agreement(s) which may be in effect between BellSouth and its connecting contractor (currently Telcordia (formerly BellCore)).

3.9 BellSouth will receive messages from the CMDS network that are destined to be processed by Talk America and will forward them to Talk America on a daily basis.

3.10 Transmission of message data between BellSouth and Talk America will be via CONNECT:Direct.

3.11 All messages and related data exchanged between BellSouth and Talk America will be formatted in accordance with accepted industry standards for EMI formatted records and packed between appropriate EMI header and trailer records, also in accordance with accepted industry standards.

3.12 Talk America will ensure that the recorded message detail necessary to recreate files provided to BellSouth will be maintained for back-up purposes for a period of three (3) calendar months beyond the related message dates.

3.13 Should it become necessary for Talk America to send data to BellSouth more than sixty (60) days past the message date(s), Talk America will notify BellSouth in advance of the transmission of the data. If there will be impacts outside the BellSouth region, BellSouth will work with its connecting contractor and Talk America to notify all affected Parties.

3.14 In the event that data to be exchanged between the two Parties should become lost or destroyed, both Parties will work together to determine the source of the problem. Once the cause of the problem has been jointly determined and the responsible Party (BellSouth or Talk America) identified and agreed to, the

company responsible for creating the data (BellSouth or Talk America) will make every effort to have the affected data restored and retransmitted. If the data cannot be retrieved, the responsible Party will be liable to the other Party for any resulting lost revenue. Lost revenue may be a combination of revenues that could not be billed to the end users and associated access revenues. Both Parties will work together to estimate the revenue amount based upon historical data through a method mutually agreed upon. The resulting estimated revenue loss will be paid by the responsible Party to the other Party within three (3) calendar months of the date of problem resolution, or as mutually agreed upon by the Parties.

3.15 Should an error be detected by the EMI format edits performed by BellSouth on data received from Talk America, the entire pack containing the affected data will not be processed by BellSouth. BellSouth will notify Talk America of the error condition. Talk America will correct the error(s) and will resend the entire pack to BellSouth for processing. In the event that an out-of-sequence condition occurs on subsequent packs, Talk America will resend these packs to BellSouth after the pack containing the error has been successfully reprocessed by BellSouth.

3.16 In association with message distribution service, BellSouth will provide Talk America with associated intercompany settlements reports (CATS and NICS) as appropriate.

3.17 In no case shall either Party be liable to the other for any direct or consequential damages incurred as a result of the obligations set out in this Agreement.

3.18 RAO Compensation

3.18.1 Rates for message distribution service provided by BellSouth for Talk America are as set forth in Exhibit A to this Attachment.

3.18.2 Rates for data transmission associated with message distribution service are as set forth in Exhibit A to this Attachment.

3.18.3 Data circuits (private line or dial-up) will be required between BellSouth and Talk America for the purpose of data transmission. Where a dedicated line is required, Talk America will be responsible for ordering the circuit, overseeing its installation and coordinating the installation with BellSouth. Talk America will also be responsible for any charges associated with this line. Equipment required on the BellSouth end to attach the line to the mainframe computer and to transmit successfully ongoing will be negotiated on a case by case basis. Where a dial-up facility is required, dial circuits will be installed in the BellSouth data center by BellSouth and the associated charges assessed to Talk America. Additionally, all message toll charges associated with the use of the dial circuit by Talk America will be the responsibility of Talk America. Associated equipment on the BellSouth end, including a modem, will be negotiated on a case by case basis between the Parties.

3.18.4 All equipment, including modems and software, that is required on the Talk America end for the purpose of data transmission will be the responsibility of Talk America.

3.19 Intercompany Settlements Messages

3.19.1 This Section addresses the settlement of revenues associated with traffic originated from or billed by Talk America as a facilities based provider of local exchange telecommunications services outside the BellSouth region. Only traffic that originates in one Bell operating territory and bills in another Bell operating territory is included. Traffic that originates and bills within the same Bell operating territory will be settled on a local basis between Talk America and the involved company(ies), unless that company is participating in NICS.

3.19.2 Both traffic that originates outside the BellSouth region by Talk America and is billed within the BellSouth region, and traffic that originates within the BellSouth region and is billed outside the BellSouth region by Talk America, is covered by this Agreement (CATS). Also covered is traffic that either is originated by or billed by Talk America, involves a company other than Talk America, qualifies for inclusion in the CATS settlement, and is not originated or billed within the BellSouth region (NICS).

3.19.3 Once Talk America is operating within the BellSouth territory, revenues associated with calls originated and billed within the BellSouth region will be settled via Telcordia (formerly BellCore)'s, its successor or assign, NICS system.

3.19.4 BellSouth will receive the monthly NICS reports from Telcordia (formerly BellCore), its successor or assign, on behalf of Talk America. BellSouth will distribute copies of these reports to Talk America on a monthly basis.

3.19.5 BellSouth will receive the monthly Calling Card and Third Number Settlement System (CATS) reports from Telcordia (formerly BellCore), its successor or assign, on behalf of Talk America. BellSouth will distribute copies of these reports to Talk America on a monthly basis.

3.19.6 BellSouth will collect the revenue earned by Talk America from the Bell operating company in whose territory the messages are billed (CATS), less a per message billing and collection fee of five cents ($0.05), on behalf of Talk America. BellSouth will remit the revenue billed by Talk America to the Bell operating company in whose territory the messages originated, less a per message billing and collection fee of five cents ($0.05), on behalf on Talk America. These two amounts will be netted together by BellSouth and the resulting charge or credit issued to Talk America via a monthly Carrier Access Billing System (CABS) miscellaneous bill.

3.19.7 BellSouth will collect the revenue earned by Talk America within the BellSouth territory from another CLEC also within the BellSouth territory (NICS) where the messages are billed, less a per message billing and collection fee of five cents ($0.05), on behalf of Talk America. BellSouth will remit the revenue billed by Talk America within the BellSouth region to the CLEC also within the BellSouth region, where the messages originated, less a per message billing and collection fee of five cents ($0.05). These two amounts will be netted together by BellSouth and the resulting charge or credit issued to Talk America via a monthly CABS miscellaneous bill.

3.19.8 BellSouth and Talk America agree that monthly netted amounts of less than fifty dollars ($50.00) will not be settled.

4. OPTIONAL DAILY USAGE FILE

4.1 Upon written request from Talk America, BellSouth will provide the Optional Daily Usage File (ODUF) service to Talk America pursuant to the terms and conditions set forth in this section.

4.2 Talk America shall furnish all relevant information required by BellSouth for the provision of the ODUF.

4.3 The Optional Daily Usage Feed will contain billable messages that were carried over the BellSouth Network and processed in the BellSouth Billing System, but billed to a Talk America customer.

4.4 Charges for delivery of the ODUF will appear on Talk Americas' monthly bills. The charges are as set forth in Exhibit A to this Attachment. The following charges would apply:

4.4.1 ODUF: Message Processing, per Magnetic Tape provisioned or ODUF: Data Transmission (CONNECT:DIRECT), per message depending on the distribution method chosen by Talk America;

4.4.2 ODUF: Message Processing, per message element will be charged for billable messages in the ODUF file; and/or,

4.4.3 ODUF: Recording, per message and ODUF: Message Processing, per message for Operator Services/Directory Assistance messages should Talk America record its own call detail for billing but contract with BellSouth to provide Operator Services/Directory Assistance service.

4.5 The Optional Daily Usage Feed will contain both rated and unrated messages. All messages will be in the standard Alliance for Telecommunications Industry Solutions (ATIS) EMI record format.

4.6 Messages that error in the billing system of Talk America will be the responsibility of Talk America. If, however, Talk America should encounter significant volumes of errored messages that prevent processing by Talk America within its systems, BellSouth will work with Talk America to determine the source of the errors and the appropriate resolution.

4.7 The following specifications shall apply to the Optional Daily Usage Feed.

4.7.1 **USAGE TO BE TRANSMITTED**

4.7.1.1 The following messages recorded by BellSouth will be transmitted to Talk America:

- Message recording for per use/per activation type services (examples: Three -Way Calling, Verify, Interrupt, Call Return, etc.)
- Measured billable Local
- Directory Assistance messages
- IntraLATA Toll
- WATS and 800 Service
- N11
- Information Service Provider Messages
- Operator Services Messages
- Operator Services Message Attempted Calls (Network Element only)
- Credit/Cancel Records
- Usage for Voice Mail Message Service

4.7.1.2 Rated Incollects (originated in BellSouth and from other companies) can also be on ODUF. Rated Incollects will be intermingled with BellSouth recorded rated and unrated usage. Rated Incollects will not be packed separately.

4.7.1.3 BellSouth will perform duplicate record checks on records processed to ODUF. Any duplicate messages detected will be deleted and not sent to Talk America.

4.7.1.4 In the event that Talk America detects a duplicate on ODUF they receive from BellSouth, Talk America will drop the duplicate message (Talk America will not return the duplicate to BellSouth).

4.7.2 **PHYSICAL FILE CHARACTERISTICS**

4.7.2.1 ODUF will be distributed to Talk America via an agreed medium with CONNECT:Direct being the preferred transport method. The Daily Usage Feed will be a variable block format (2476) with an LRECL of 2472. The data on the Daily Usage Feed will be in a non-compacted EMI format (175 byte format plus modules). It will be created on a daily basis (Monday through Friday except holidays). Details such as dataset name and delivery schedule will be addressed during negotiations of the distribution medium. There will be a maximum of one dataset per workday per OCN.

4.7.2.2 Data circuits (private line or dial-up) will be required between BellSouth and Talk America for the purpose of data transmission. Where a dedicated line is required, Talk America will be responsible for ordering the circuit, overseeing its installation and coordinating the installation with BellSouth. Talk America will also be responsible for any charges associated with this line. Equipment required on the BellSouth end to attach the line to the mainframe computer and to transmit successfully ongoing will be negotiated on a case by case basis. Where a dial-up facility is required, dial circuits will be installed in the BellSouth data center by BellSouth and the associated charges assessed to Talk America. Additionally, all message toll charges associated with the use of the dial circuit by Talk America will be the responsibility of Talk America. Associated equipment on the BellSouth end, including a modem, will be negotiated on a case by case basis between the Parties. All equipment, including modems and software, that is required on Talk America's end for the purpose of data transmission will be the responsibility of Talk America.

4.7.3 **PACKING SPECIFICATIONS**

4.7.3.1 A pack will contain a minimum of one message record or a maximum of 99,999 message records plus a pack header record and a pack trailer record. One transmission can contain a maximum of 99 packs and a minimum of one pack.

4.7.3.2 The OCN, From RAO, and Invoice Number will control the invoice sequencing. The From RAO will be used to identify to Talk America which BellSouth RAO that is sending the message. BellSouth and Talk America will use the invoice sequencing to control data exchange. BellSouth will be notified of sequence failures identified by Talk America and resend the data as appropriate.

The data will be packed using ATIS EMI records.

4.7.4 **PACK REJECTION**

4.7.4.1 Talk America will notify BellSouth within one business day of rejected packs (via the mutually agreed medium). Packs could be rejected because of pack sequencing discrepancies or a critical edit failure on the Pack Header or Pack Trailer records (i.e. out-of-balance condition on grand totals, invalid data populated). Standard ATIS EMI Error Codes will be used. Talk America will not be required to return

the actual rejected data to BellSouth. Rejected packs will be corrected and retransmitted to Talk America by BellSouth.

4.7.5 **CONTROL DATA**

4.7.5.1 Talk America will send one confirmation record per pack that is received from BellSouth. This confirmation record will indicate Talk America received the pack and the acceptance or rejection of the pack. Pack Status Code(s) will be populated using standard ATIS EMI error codes for packs that were rejected by Talk America for reasons stated in the above section.

4.7.6 **TESTING**

4.7.6.1 Upon request from Talk America, BellSouth shall send test files to Talk America for ODUF. The Parties agree to review and discuss the file's content and/or format. For testing of usage results, BellSouth shall request that Talk America set up a production (LIVE) file. The live test may consist of Talk America's employees making test calls for the types of services Talk America requests on ODUF. These test calls are logged by Talk America, and the logs are provided to BellSouth. These logs will be used to verify the files. Testing will be completed within 30 calendar days from the date on which the initial test file was sent.

5. ACCESS DAILY USAGE FILE

5.1 Upon written request from Talk America, BellSouth will provide the Access Daily Usage File (ADUF) service to Talk America pursuant to the terms and conditions set forth in this section.

5.2 Talk America shall furnish all relevant information required by BellSouth for the provision of ADUF.

5.3 ADUF will contain access messages associated with a port that Talk America has purchased from BellSouth

5.4 Charges for delivery of ADUF will appear on Talk America's monthly bills. The charges are as set forth in Exhibit A to this Attachment. All messages will be in the standard ATIS EMI record format.

5.5 Messages that error in the billing system of Talk America will be the responsibility of Talk America. If, however, Talk America should encounter significant volumes of errored messages that prevent processing by Talk America within its systems, BellSouth will work with Talk America to determine the source of the errors and the appropriate resolution.

5.6 **USAGE TO BE TRANSMITTED**

5.6.1 The following messages recorded by BellSouth will be transmitted to Talk America:

5.6.1.1 Recorded originating and terminating interstate and intrastate access records associated with a port.

5.6.1.2 Recorded terminating access records for undetermined jurisdiction access records associated with a port.

5.6.2 When Talk America purchases Network Element ports from BellSouth and calls are made using these ports, BellSouth will handle the calls as follows:

5.6.2.1 Originating from Network Element and carried by Interexchange Carrier:

5.6.2.1.1 BellSouth will bill network element to CLEC and send access record to the CLEC via ADUF.

5.6.2.2 Originating from network element and carried by BellSouth (Talk America is BellSouth's toll customer).

5.6.2.3 Terminating on network element and carried by Interexchange Carrier:

5.6.2.3.1 BellSouth will bill network element to Talk America and send access record to Talk America.

5.6.2.4 Terminating on network element and carried by BellSouth:

5.6.2.4.1 BellSouth will bill network element to Talk America and send access record to Talk America.

5.6.3 BellSouth will perform duplicate record checks on records processed to ADUF. Any duplicate messages detected will be dropped and not sent to Talk America.

5.6.4 In the event that Talk America detects a duplicate on ADUF they receive from BellSouth, Talk America will drop the duplicate message (Talk America will not return the duplicate to BellSouth.)

5.6.5 **PHYSICAL FILE CHARACTERISTICS**

5.6.5.1 ADUF will be distributed to Talk America via CONNECT:Direct. The Access Daily Usage Feed will be a fixed block format (2476) with an LRECL of 2472. The data on the Daily Usage Feed will be in a non-compacted EMI format (210 byte). It will be created on a daily basis (Monday through Friday except holidays). Details such as dataset name and delivery schedule will be addressed during negotiations of the distribution medium. There will be a maximum of one dataset per workday per OCN.

5.6.5.2 Data circuits (private line or dial-up) will be required between BellSouth and Talk America for the purpose of data transmission. Where a dedicated line is required, Talk America will be responsible for ordering the circuit, overseeing its installation and coordinating the installation with BellSouth. Talk America will also be responsible for any charges associated with this line. Equipment required on the BellSouth end to attach the line to the mainframe computer and to transmit successfully ongoing will be negotiated on a case by case basis. Where a dial-up facility is required, dial circuits will be installed in the BellSouth data center by BellSouth and the associated charges assessed to Talk America. Additionally, all message toll charges associated with the use of the dial circuit by Talk America will be the responsibility of Talk America. Associated equipment on the BellSouth end, including a modem, will be negotiated on a case by case basis between the Parties. All equipment, including modems and software, that is required on Talk America's end for the purpose of data transmission will be the responsibility of Talk America.

5.6.6 **PACKING SPECIFICATIONS**

5.6.6.1 A pack will contain a minimum of one message record or a maximum of 99,999 message records plus a pack header record and a pack trailer record. One transmission can contain a maximum of 99 packs and a minimum of one pack.

5.6.6.2 The OCN, From RAO, and Invoice Number will control the invoice sequencing. The From RAO will be used to identify to Talk America which BellSouth RAO is sending the message. BellSouth and Talk America will use the invoice sequencing to control data exchange. BellSouth will be notified of sequence failures identified by Talk America and resend the data as appropriate.

The data will be packed using ATIS EMI records.

5.6.7 **PACK REJECTION**

5.6.7.1 Talk America will notify BellSouth within one business day of rejected packs (via the mutually agreed medium). Packs could be rejected because of pack sequencing discrepancies or a critical edit failure on the Pack Header or Pack Trailer records (i.e. out-of-balance condition on grand totals, invalid data populated). Standard ATIS EMI Error Codes will be used. Talk America will not be required to return the actual rejected data to BellSouth. Rejected packs will be corrected and retransmitted to Talk America by BellSouth.

5.6.8 **CONTROL DATA**

5.6.8.1 Talk America will send one confirmation record per pack that is received from BellSouth. This confirmation record will indicate Talk America received the pack and the acceptance or rejection of the pack. Pack Status Code(s) will be populated using standard ATIS EMI error codes for packs that were rejected by Talk America for reasons stated in the above section.

5.6.9 Testing

5.6.9.1 Upon request from Talk America, BellSouth shall send a test file of generic data to Talk America via Connect:Direct or Text File via E-Mail. The Parties agree to review and discuss the test file's content and/or format.

7. ENHANCED OPTIONAL DAILY USAGE FILE

7.1 Upon written request from Talk America, BellSouth will provide the Enhanced Optional Daily Usage File (EODUF) service to Talk America pursuant to the terms and conditions set forth in this section. EODUF will only be sent to existing ODUF subscribers who request the EODUF option.

7.2 Talk America shall furnish all relevant information required by BellSouth for the provision of the Enhanced Optional Daily Usage File.

7.3 The Enhanced Optional Daily Usage File (EODUF) will provide usage data for local calls originating from resold Flat Rate Business and Residential Lines.

Charges for delivery of the Enhanced Optional Daily Usage File will appear on the Talk America's monthly bills. The charges are as set forth in Exhibit A to this Attachment.

7.4 All messages will be in the standard Alliance for Telecommunications Industry Solutions (ATIS) EMI record format.

7.5 Messages that error in the billing system of Talk America will be the responsibility of Talk America. If, however, Talk America should encounter significant volumes of errored messages that prevent processing by Talk America within its systems, BellSouth will work with Talk America to determine the source of the errors and the appropriate resolution.

7.7 The following specifications shall apply to the Optional Daily Usage File feed.

7.6.1 USAGE TO BE TRANSMITTED

7.6.1.1 The following messages recorded by BellSouth will be transmitted to Talk America:
Customer usage data for flat rated local call originating from CLEC end user lines (1FB or 1FR). The EODUF record for flat rate messages will include:

Date of Call
From Number
To Number
Connect Time

Conversation Time
Method of Recording
From RAO
Rate Class
Message Type
Billing Indicators
Bill to Number

7.6.1.2 BellSouth will perform duplicate record checks on EODUF records processed to Optional Daily Usage File. Any duplicate messages detected will be deleted and not sent to Talk America.

7.6.1.3 In the event that Talk America detects a duplicate on Enhanced Optional Daily Usage File they receive from BellSouth, Talk America will drop the duplicate message (Talk America will not return the duplicate to BellSouth).

7.6.2 PHYSICAL FILE CHARACTERISTICS

7.6.2.1 The Enhanced Optional Daily Usage Feed will be distributed to Talk America over their existing Optional Daily Usage File (ODUF) feed. The EODUF messages will be intermingled among Talk America's Optional Daily Usage File (ODUF) messages. The EODUF will be a variable block format (2476) with an LRECL of 2472. The data on the EODUF will be in a non-compacted EMI format (175 byte format plus modules). It will be created on a daily basis (Monday through Friday except holidays).

7.6.2.2 Data circuits (private line or dial-up) may be required between BellSouth and Talk America for the purpose of data transmission. Where a dedicated line is required, Talk America will be responsible for ordering the circuit, overseeing its installation and coordinating the installation with BellSouth. Talk America will also be responsible for any charges associated with this line. Equipment required on the BellSouth end to attach the line to the mainframe computer and to transmit successfully ongoing will be negotiated on a case by case basis. Where a dial-up facility is required, dial circuits will be installed in the BellSouth data center by BellSouth and the associated charges assessed to Talk America. Additionally, all message toll charges associated with the use of the dial circuit by Talk America will be the responsibility of Talk America. Associated equipment on the BellSouth end, including a modem, will be negotiated on a case by case basis between the Parties. All equipment, including modems and software, that is required on Talk America's end for the purpose of data transmission will be the responsibility of Talk America.

7.6.3 PACKING SPECIFICATIONS

7.6.3.1 A pack will contain a minimum of one message record or a maximum of 99,999 message records plus a pack header record and a pack trailer record. One transmission can contain a maximum of 99 packs and a minimum of one pack.

7.6.3.2 The Operating Company Number (OCN), From Revenue Accounting Office (RAO), and Invoice Number will control the invoice sequencing. The From RAO will be used to identify to Talk America which BellSouth RAO that is sending the message. BellSouth and Talk America will use the invoice sequencing to control data exchange. BellSouth will be notified of sequence failures identified by Talk America and resend the data as appropriate.

The data will be packed using ATIS EMI records.

ODUF/ADUF/CMDS - Alabama														Attachment: 7		Exhibit: A	
CATEGORY		RATE ELEMENTS	Interim	Zone	BCS	USOC	RATES($)					Svc Order Submitted Elec per LSR	Svc Order Submitted Manually per LSR	Incremental Charge - Manual Svc Order vs. Electronic-1st	Incremental Charge - Manual Svc Order vs. Electronic-Add'l	Incremental Charge - Manual Svc Order vs. Electronic-Disc 1st	Incremental Charge - Manual Svc Order vs. Electronic-Disc Add'l
							Rec	Nonrecurring		Nonrecurring Disconnect		OSS Rates($)					
								First	Add'l	First	Add'l	SOMEC	SOMAN	SOMAN	SOMAN	SOMAN	SOMAN
ODUF/ADUF/CMDS																	
	ACCESS DAILY USAGE FILE (ADUF)																
		ADUF: Message Processing, per message				N/A	0.004										
		ADUF: Data Transmission (CONNECT:DIRECT), per message				N/A	0.001										
	OPTIONAL DAILY USAGE FILE (ODUF)																
		ODUF: Recording, per message				N/A	0.0002										
		ODUF: Message Processing, per message				N/A	0.0033										
		ODUF: Message Processing, per Magnetic Tape provisioned				N/A	55.19										
		ODUF: Data Transmission (CONNECT:DIRECT), per message				N/A	0.00004										
	CENTRALIZED MESSAGE DISTRIBUTION SERVICE (CMDS)																
		CMDS: Message Processing, per message				N/A	0.004										
		CMDS: Data Transmission (CONNECT:DIRECT), per message				N/A	0.001										
	Notes: If no rate is identified in the contract, the rate for the specific service or function will be as set forth in applicable BellSouth tariff or as negotiated by the Parties upon request by either Party.																

ODUF/ADUF/CMDS - Florida														Attachment: 7		Exhibit: A	
CATEGORY		RATE ELEMENTS	Interim	Zone	BCS	USOC	RATES($)					Svc Order Submitted Elec per LSR	Svc Order Submitted Manually per LSR	Incremental Charge - Manual Svc Order vs. Electronic-1st	Incremental Charge - Manual Svc Order vs. Electronic-Add'l	Incremental Charge - Manual Svc Order vs. Electronic-Disc 1st	Incremental Charge - Manual Svc Order vs. Electronic-Disc Add'l
							Rec	Nonrecurring		Nonrecurring Disconnect		OSS Rates($)					
								First	Add'l	First	Add'l	SOMEC	SOMAN	SOMAN	SOMAN	SOMAN	SOMAN
ODUF/ADUF/CMDS																	
	ACCESS DAILY USAGE FILE (ADUF)																
		ADUF: Message Processing, per message				N/A	0.014391										
		ADUF: Data Transmission (CONNECT:DIRECT), per message				N/A	0.00012973										
	OPTIONAL DAILY USAGE FILE (ODUF)																
		ODUF: Recording, per message				N/A	0.0000071										
		ODUF: Message Processing, per message				N/A	0.006835										
		ODUF: Message Processing, per Magnetic Tape provisioned				N/A	48.96										
		ODUF: Data Transmission (CONNECT:DIRECT), per message				N/A	0.00010811										
	CENTRALIZED MESSAGE DISTRIBUTION SERVICE (CMDS)																
		CMDS: Message Processing, per message				N/A	0.004										
		CMDS: Data Transmission (CONNECT:DIRECT), per message				N/A	0.001										
	Notes: If no rate is identified in the contract, the rate for the specific service or function will be as set forth in applicable BellSouth tariff or as negotiated by the Parties upon request by either Party.																

ODUF/ADUF/CMDS - Georgia														Attachment: 7		Exhibit: A	
CATEGORY		RATE ELEMENTS	Interim	Zone	BCS	USOC	RATES($)					Svc Order Submitted Elec per LSR	Svc Order Submitted Manually per LSR	Incremental Charge - Manual Svc Order vs. Electronic-1st	Incremental Charge - Manual Svc Order vs. Electronic-Add'l	Incremental Charge - Manual Svc Order vs. Electronic-Disc 1st	Incremental Charge - Manual Svc Order vs. Electronic-Disc Add'l
							Rec	Nonrecurring		Nonrecurring Disconnect		OSS Rates($)					
								First	Add'l	First	Add'l	SOMEC	SOMAN	SOMAN	SOMAN	SOMAN	SOMAN
ODUF/ADUF/CMDS																	
	ACCESS DAILY USAGE FILE (ADUF)																
		ADUF: Message Processing, per message				N/A	0.0136327										
		ADUF: Data Transmission (CONNECT:DIRECT), per message				N/A	0.0000434										
	OPTIONAL DAILY USAGE FILE (ODUF)																
		ODUF: Recording, per message				N/A	0.0001275										
		ODUF: Message Processing, per message				N/A	0.0082548										
		ODUF: Message Processing, per Magnetic Tape provisioned				N/A	28.85										
		ODUF: Data Transmission (CONNECT:DIRECT), per message				N/A	0.0000434										
	CENTRALIZED MESSAGE DISTRIBUTION SERVICE (CMDS)																
		CMDS: Message Processing, per message				N/A	0.004										
		CMDS: Data Transmission (CONNECT:DIRECT), per message				N/A	0.001										
	Notes: If no rate is identified in the contract, the rate for the specific service or function will be as set forth in applicable BellSouth tariff or as negotiated by the Parties upon request by either Party.																

ODUF/ADUF/CMDS - Kentucky														Attachment: 7		Exhibit: A	
CATEGORY		RATE ELEMENTS	Interim	Zone	BCS	USOC	RATES($)					Svc Order Submitted Elec per LSR	Svc Order Submitted Manually per LSR	Incremental Charge - Manual Svc Order vs. Electronic-1st	Incremental Charge - Manual Svc Order vs. Electronic-Add'l	Incremental Charge - Manual Svc Order vs. Electronic-Disc 1st	Incremental Charge - Manual Svc Order vs. Electronic-Disc Add'l
							Rec	Nonrecurring		Nonrecurring Disconnect		OSS Rates($)					
								First	Add'l	First	Add'l	SOMEC	SOMAN	SOMAN	SOMAN	SOMAN	SOMAN
ODUF/ADUF/CMDS																	
	ACCESS DAILY USAGE FILE (ADUF)																
		ADUF: Message Processing, per message				N/A	0.001857										
		ADUF: Data Transmission (CONNECT:DIRECT), per message				N/A	0.0001245										
	OPTIONAL DAILY USAGE FILE (ODUF)																
		ODUF: Recording, per message				N/A	0.0000136										
		ODUF: Message Processing, per message				N/A	0.002506										
		ODUF: Message Processing, per Magnetic Tape provisioned				N/A	35.90										
		ODUF: Data Transmission (CONNECT:DIRECT), per message				N/A	0.00010372										
	CENTRALIZED MESSAGE DISTRIBUTION SERVICE (CMDS)																
		CMDS: Message Processing, per message				N/A	0.004										
		CMDS: Data Transmission (CONNECT:DIRECT), per message				N/A	0.001										
	Notes: If no rate is identified in the contract, the rate for the specific service or function will be as set forth in applicable BellSouth tariff or as negotiated by the Parties upon request by either Party.																

ODUF/ADUF/CMDS - Louisiana														Attachment: 7		Exhibit: A	
CATEGORY		RATE ELEMENTS	Interim	Zone	BCS	USOC	RATES($)					Svc Order Submitted Elec per LSR	Svc Order Submitted Manually per LSR	Incremental Charge - Manual Svc Order vs. Electronic-1st	Incremental Charge - Manual Svc Order vs. Electronic-Add'l	Incremental Charge - Manual Svc Order vs. Electronic-Disc 1st	Incremental Charge - Manual Svc Order vs. Electronic-Disc Add'l
							Rec	Nonrecurring		Nonrecurring Disconnect		OSS Rates($)					
								First	Add'l	First	Add'l	SOMEC	SOMAN	SOMAN	SOMAN	SOMAN	SOMAN
ODUF/ADUF/CMDS																	
	ACCESS DAILY USAGE FILE (ADUF)																
		ADUF: Message Processing, per message				N/A	0.007983										
		ADUF: Data Transmission (CONNECT:DIRECT), per message				N/A	0.00012681										
	OPTIONAL DAILY USAGE FILE (ODUF)																
		ODUF: Recording, per message				N/A	0.0000117										
		ODUF: Message Processing, per message				N/A	0.004641										
		ODUF: Message Processing, per Magnetic Tape provisioned				N/A	48.45										
		ODUF: Data Transmission (CONNECT:DIRECT), per message				N/A	0.00010568										
	CENTRALIZED MESSAGE DISTRIBUTION SERVICE (CMDS)																
		CMDS: Message Processing, per message				N/A	0.004										
		CMDS: Data Transmission (CONNECT:DIRECT), per message				N/A	0.001										
	Notes: If no rate is identified in the contract, the rate for the specific service or function will be as set forth in applicable BellSouth tariff or as negotiated by the Parties upon request by either Party.																

ODUF/ADUF/CMDS - Mississippi														Attachment: 7		Exhibit: A	
CATEGORY		RATE ELEMENTS	Interim	Zone	BCS	USOC	RATES($)					Svc Order Submitted Elec per LSR	Svc Order Submitted Manually per LSR	Incremental Charge - Manual Svc Order vs. Electronic-1st	Incremental Charge - Manual Svc Order vs. Electronic-Add'l	Incremental Charge - Manual Svc Order vs. Electronic-Disc 1st	Incremental Charge - Manual Svc Order vs. Electronic-Disc Add'l
							Rec	Nonrecurring		Nonrecurring Disconnect		OSS Rates($)					
								First	Add'l	First	Add'l	SOMEC	SOMAN	SOMAN	SOMAN	SOMAN	SOMAN
ODUF/ADUF/CMDS																	
	ACCESS DAILY USAGE FILE (ADUF)																
		ADUF: Message Processing, per message				N/A	0.008087										
		ADUF: Data Transmission (CONNECT:DIRECT), per message				N/A	0.00012803										
	OPTIONAL DAILY USAGE FILE (ODUF)																
		ODUF: Recording, per message				N/A	0.0000063										
		ODUF: Message Processing, per message				N/A	0.004707										
		ODUF: Message Processing, per Magnetic Tape provisioned				N/A	49.04										
		ODUF: Data Transmission (CONNECT:DIRECT), per message				N/A	0.00010669										
	CENTRALIZED MESSAGE DISTRIBUTION SERVICE (CMDS)																
		CMDS: Message Processing, per message				N/A	0.004										
		CMDS: Data Transmission (CONNECT:DIRECT), per message				N/A	0.001										
	Notes: If no rate is identified in the contract, the rate for the specific service or function will be as set forth in applicable BellSouth tariff or as negotiated by the Parties upon request by either Party.																

ODUF/ADUF/CMDS - North Carolina														Attachment: 7		Exhibit: A	
CATEGORY		RATE ELEMENTS	Interim	Zone	BCS	USOC	RATES($)					Svc Order Submitted Elec per LSR	Svc Order Submitted Manually per LSR	Incremental Charge - Manual Svc Order vs. Electronic-1st	Incremental Charge - Manual Svc Order vs. Electronic-Add'l	Incremental Charge - Manual Svc Order vs. Electronic-Disc 1st	Incremental Charge - Manual Svc Order vs. Electronic-Disc Add'l
							Rec	Nonrecurring		Nonrecurring Disconnect		OSS Rates($)					
								First	Add'l	First	Add'l	SOMEC	SOMAN	SOMAN	SOMAN	SOMAN	SOMAN
ODUF/ADUF/CMDS																	
	ACCESS DAILY USAGE FILE (ADUF)																
		ADUF: Message Processing, per message				N/A	0.004										
		ADUF: Data Transmission (CONNECT:DIRECT), per message				N/A	0.001										
	OPTIONAL DAILY USAGE FILE (ODUF)																
		ODUF: Recording, per message				N/A	0.0003										
		ODUF: Message Processing, per message				N/A	0.0032										
		ODUF: Message Processing, per Magnetic Tape provisioned				N/A	54.61										
		ODUF: Data Transmission (CONNECT:DIRECT), per message				N/A	0.0004										
	CENTRALIZED MESSAGE DISTRIBUTION SERVICE (CMDS)																
		CMDS: Message Processing, per message				N/A	0.004										
		CMDS: Data Transmission (CONNECT:DIRECT), per message				N/A	0.001										
	Notes: If no rate is identified in the contract, the rate for the specific service or function will be as set forth in applicable BellSouth tariff or as negotiated by the Parties upon request by either Party.																

ODUF/ADUF/CMDS - South Carolina														Attachment: 7		Exhibit: A	
CATEGORY		RATE ELEMENTS	Interim	Zone	BCS	USOC	RATES($)					Svc Order Submitted Elec per LSR	Svc Order Submitted Manually per LSR	Incremental Charge - Manual Svc Order vs. Electronic-1st	Incremental Charge - Manual Svc Order vs. Electronic-Add'l	Incremental Charge - Manual Svc Order vs. Electronic-Disc 1st	Incremental Charge - Manual Svc Order vs. Electronic-Disc Add'l
							Rec	Nonrecurring		Nonrecurring Disconnect		OSS Rates($)					
								First	Add'l	First	Add'l	SOMEC	SOMAN	SOMAN	SOMAN	SOMAN	SOMAN
ODUF/ADUF/CMDS																	
	ACCESS DAILY USAGE FILE (ADUF)																
		ADUF: Message Processing, per message				N/A	0.008061										
		ADUF: Data Transmission (CONNECT:DIRECT), per message				N/A	0.00013036										
	OPTIONAL DAILY USAGE FILE (ODUF)																
		ODUF: Recording, per message				N/A	0.0000216										
		ODUF: Message Processing, per message				N/A	0.004704										
		ODUF: Message Processing, per Magnetic Tape provisioned				N/A	48.87										
		ODUF: Data Transmission (CONNECT:DIRECT), per message				N/A	0.00010863										
	CENTRALIZED MESSAGE DISTRIBUTION SERVICE (CMDS)																
		CMDS: Message Processing, per message				N/A	0.004										
		CMDS: Data Transmission (CONNECT:DIRECT), per message				N/A	0.001										
	Notes: If no rate is identified in the contract, the rate for the specific service or function will be as set forth in applicable BellSouth tariff or as negotiated by the Parties upon request by either Party.																

ODUF/ADUF/CMDS - Tennessee														Attachment: 7		Exhibit: A	
CATEGORY		RATE ELEMENTS	Interim	Zone	BCS	USOC	RATES($)					Svc Order Submitted Elec per LSR	Svc Order Submitted Manually per LSR	Incremental Charge - Manual Svc Order vs. Electronic-1st	Incremental Charge - Manual Svc Order vs. Electronic-Add'l	Incremental Charge - Manual Svc Order vs. Electronic-Disc 1st	Incremental Charge - Manual Svc Order vs. Electronic-Disc Add'l
							Rec	Nonrecurring		Nonrecurring Disconnect		OSS Rates($)					
								First	Add'l	First	Add'l	SOMEC	SOMAN	SOMAN	SOMAN	SOMAN	SOMAN
ODUF/ADUF/CMDS																	
	ACCESS DAILY USAGE FILE (ADUF)																
		ADUF: Message Processing, per message				N/A	0.004										
		ADUF: Data Transmission (CONNECT:DIRECT), per message				N/A	0.001										
	OPTIONAL DAILY USAGE FILE (ODUF)																
		ODUF: Recording, per message				N/A	0.0000044										
		ODUF: Message Processing, per message				N/A	0.0027366										
		ODUF: Message Processing, per Magnetic Tape provisioned				N/A	52.75										
		ODUF: Data Transmission (CONNECT:DIRECT), per message				N/A	0.0000339										
	CENTRALIZED MESSAGE DISTRIBUTION SERVICE (CMDS)																
		CMDS: Message Processing, per message				N/A	0.004										
		CMDS: Data Transmission (CONNECT:DIRECT), per message				N/A	0.001										
	Notes: If no rate is identified in the contract, the rate for the specific service or function will be as set forth in applicable BellSouth tariff or as negotiated by the Parties upon request by either Party.																

Attachment 8

Rights-of-Way, Conduits and Pole Attachments

Rights-of-Way, Conduits and Pole Attachments

BellSouth will provide nondiscriminatory access to any pole, duct, conduit, or right-of-way owned or controlled by BellSouth pursuant to 47 U.S.C. § 224, as amended by the Act, pursuant to terms and conditions of a license agreement subsequently negotiated with BellSouth's Competitive Structure Provisioning Center.

ATTACHMENT 9

PERFORMANCE MEASUREMENTS

PERFORMANCE MEASUREMENTS

Upon a particular Commission's issuance of an Order pertaining to Performance Measurements in a proceeding expressly applicable to all CLECs generally, BellSouth shall implement in that state such Performance Measurements as of the date specified by the Commission. Performance Measurements that have been Ordered in a particular state can currently be accessed via the internet at https://pmap.bellsouth.com. At the request of the Tennessee Regulatory Authority (TRA), the following Regional Service Quality Measurements (SQM) plan is being included as the performance measurements currently in place for the state of Tennessee. At such time that the TRA issues an Order pertaining to Performance Measurements, such Performance Measurements shall supersede the Regional SQM contained in the Agreement.

BellSouth Service Quality Measurement Plan (SQM)

Region Performance Metrics

Measurement Descriptions
Version 0.05

Issue Date: December 21, 2001

Introduction

The BellSouth Service Quality Measurement Plan (SQM) describes in detail the measurements produced to evaluate the quality of service delivered to BellSouth's customers both wholesale and retail. The SQM was developed to respond to the requirements of the Communications Act of 1996 Section 251 (96 Act) which required BellSouth to provide non-discriminatory access to Competitive Local Exchange Carriers (CLEC)[1] and its Retail Customers. The reports produced by the SQM provide regulators, CLECs and BellSouth the information necessary to monitor the delivery of non-discriminatory access.

This plan results from the many divergent forces evolving from the 96 Act. The 96 Act, the Georgia Public Service Commission (GPSC) Order (Docket 7892-U 12/30/97), LCUG 1-7.0, the FCC's NPRM (CC Docket 98-56 RM9101 04/17/98), the Louisiana Public Service Commission (LPSC) Order (Docket U-22252 Subdocket C 04/19/98), numerous arbitration cases, LPSC sponsored collaborative workshops (10/98-02/00), and proceedings in Alabama, Mississippi, and North Carolina have and continue to influence the SQM.

The SQM and the reports flowing from it must change to reflect the dynamic requirements of the industry. New measurements are added as new products, systems, and processes are developed and fielded. New products and services are added as the markets for them develop and the processes stabilize. The measurements are also changed to reflect changes in systems, correct errors, and respond to both 3rd Party audit requirements and Commission requirements.

This document is intended for use by someone with knowledge of telecommunications industry, information technologies and a functional knowledge of the subject areas covered by the BellSouth Performance Measurements and the reports that flow from them.

Once it is approved, the most current copy of this document can be found on the web at URL: https://pmap.bellsouth.com in the Documentation Downloads folder.

Report Publication Dates

Each month, preliminary SQM reports will be posted to BellSouth's SQM web site (https://www.pmap.bellsouth.com) by 8:00 A.M. EST on the 21st day of each month or the first business day after the 21st. Final validated SQM reports will be posted by 8:00 A.M. on the last day of the month. Reports not posted by this time will be considered late for SEEM payment purposes. SEEM reports will posted on the 15th of the following month. Payments due will also be paid on the 15th of the following month. For instance: May data will be posted in preliminary SQM reports on June 21. Final validated SQM reports will be posted on the last day of June. Final validated SEEM reports will be posted and payments mailed on July 15th. In the event the 15th falls on a weekend or holiday, reports and payments will be posted/made the next business day.

---

[1] *Alternative Local Exchange Companies (ALEC) and Competing Local Providers (CLP) are referred to as Competitive Local Exchange Carriers (CLEC) in this document.*

Report Delivery Methods

CLEC SQM and SEEM reports will be considered delivered when posted to the web site. Commissions will be given access to the web site. In addition, a copy of the Monthly State Summary reports will be filed with the appropriate Commissions as soon as possible after the last day of each month.

Document Number: RGN-V005-122101

Contents

Section 1: Operations Support Systems (OSS) 1-1
OSS-1: Average Response Time and Response Interval (Pre-Ordering/ Ordering) 1-1
OSS-2: Interface Availability (Pre-Ordering/Ordering) 1-5
OSS-3: Interface Availability (Maintenance & Repair) 1-7
OSS-4: Response Interval (Maintenance & Repair) 1-9
PO-1: Loop Makeup - Response Time – Manual 1-11
PO-2: Loop Make Up - Response Time - Electronic 1-13

Section 2: Ordering 2-1
O-1: Acknowledgement Message Timeliness 2-1
O-2: Acknowledgement Message Completeness 2-3
O-3: Percent Flow-Through Service Requests (Summary) 2-4
O-4: Percent Flow-Through Service Requests (Detail) 2-6
O-5: Flow-Through Error Analysis 2-9
O-6: CLEC LSR Information 2-10
LSR Flow Through Matrix 2-11
O-7: Percent Rejected Service Requests 2-14
O-8: Reject Interval 2-16
O-9: Firm Order Confirmation Timeliness 2-19
O-10: Service Inquiry with LSR Firm Order Confirmation (FOC) Response Time Manual 2-22
O-11: Firm Order Confirmation and Reject Response Completeness 2-24
O-12: Speed of Answer in Ordering Center 2-26
O-13: LNP-Percent Rejected Service Requests 2-27
O-14: LNP-Reject Interval Distribution & Average Reject Interval 2-29
O-15: LNP-Firm Order Confirmation Timeliness Interval Distribution & Firm Order Confirmation Average Interval 2-32

Section 3: Provisioning 3-1
P-1: Mean Held Order Interval & Distribution Intervals 3-1
P-2: Average Jeopardy Notice Interval & Percentage of Orders Given Jeopardy Notices 3-3
P-3: Percent Missed Installation Appointments 3-5
P-4: Average Completion Interval (OCI) & Order Completion Interval Distribution 3-8
P-5: Average Completion Notice Interval 3-11
P-6: % Completions/Attempts without Notice or < 24 hours Notice 3-13
P-7: Coordinated Customer Conversions Interval 3-15
P-7A: Coordinated Customer Conversions – Hot Cut Timeliness% Within Interval and Average Interval 3-17
P-7B: Coordinated Customer Conversions – Average Recovery Time 3-19
P-7C: Hot Cut Conversions - % Provisioning Troubles Received Within 7 days of a completed Service Order 3-21
P-8: Cooperative Acceptance Testing - % of xDSL Loops Tested 3-23
P-9: % Provisioning Troubles within 30 days of Service Order Completion 3-25
P-10: Total Service Order Cycle Time (TSOCT) 3-28
P-11: Service Order Accuracy 3-30
P-12: LNP-Percent Missed Installation Appointments 3-32
P-13: LNP-Average Disconnect Timeliness Interval & Disconnect Timeliness Interval Distribution

.....3-34
P-14: LNP-Total Service Order Cycle Time (TSOCT).....3-36

Section 4: Section 4: Maintenance & Repair.....4-1
M&R-1: Missed Repair Appointments.....4-1
M&R-2: Customer Trouble Report Rate.....4-3
M&R-3: Maintenance Average Duration.....4-5
M&R-4: Percent Repeat Troubles within 30 Days.....4-7
M&R-5: Out of Service (OOS) > 24 Hours.....4-9
M&R-6: Average Answer Time – Repair Centers.....4-11
M&R-7: Mean Time To Notify CLEC of Network Outages.....4-12

Section 5: Billing.....5-1
B-1: Invoice Accuracy.....5-1
B2: Mean Time to Deliver Invoices.....5-3
B3: Usage Data Delivery Accuracy.....5-5
B4: Usage Data Delivery Completeness.....5-6
B5: Usage Data Delivery Timeliness.....5-7
B6: Mean Time to Deliver Usage.....5-8
B7: Recurring Charge Completeness.....5-9
B8: Non-Recurring Charge Completeness.....5-10

Section 6: Operator Services And Directory Assistance.....6-1
OS-1: Speed to Answer Performance/Average Speed to Answer - Toll.....6-1
OS-2: Speed to Answer Performance/Percent Answered with “X” Seconds - Toll.....6-2
DA-1: Speed to Answer Performance/Average Speed to Answer - Directory Assistance (DA).....6-3
DA-2: Speed to Answer Performance/Percent Answered within “X” Seconds - Directory Assistance (DA).....6-4

Section 7: Database Update Information.....7-1
D-1: Average Database Update Interval.....7-1
D-2: Percent Database Update Accuracy.....7-3
D-3: Percent NXXs and LRNs Loaded by the LERG Effective Date.....7-5

Section 8: E911.....8-1
E-1: Timeliness.....8-1
E-2: Accuracy.....8-2
E-3: Mean Interval.....8-3

Section 9: Trunk Group Performance.....9-1
TGP-1: Trunk Group Performance-Aggregate.....9-1
TGP-2: Trunk Group Performance-CLEC Specific.....9-3

Section 10: Collocation.....10-1
C-1: Collocation Average Response Time.....10-1
C-2: Collocation Average Arrangement Time.....10-2
C-3: Collocation Percent of Due Dates Missed.....10-3

Section 11: Change Management.....11-4
CM-1: Timeliness of Change Management Notices.....11-4
CM-2: Change Management Notice Average Delay Days.....11-5

CM-3: Timeliness of Documents Associated with Change 11-6
CM-4: Change Management Documentation Average Delay Days 11-7
CM-5: Notification of CLEC Interface Outages 11-8

Section 12: Bona Fide / New Business Request Process 12-1
BFR-1: Percentage of BFR/NBR Requests Processed Within 30 Business Days 12-1
BFR-2: Percentage of Quotes Provided for Authorized BFR/NBR Requests Processed Within X (10/30/60) Business Days 12-2

Appendix A: Reporting Scope 1
A-1: Standard Service Groupings 1
A-2: Standard Service Order Activities 1

Appendix B: Glossary of Acronyms and Terms 1

Appendix C: BellSouth Audit Policy 1

Section 1: Operations Support Systems (OSS)

OSS-1: Average Response Time and Response Interval (Pre-Ordering/ Ordering)

Definition

Average response time and response intervals are the average times and number of requests responded to within certain intervals for accessing legacy data associated with appointment scheduling, service & feature availability, address verification, request for Telephone numbers (TNs), and Customer Service Records (CSRs).

Exclusions

None

Business Rules

The average response time for retrieving pre-order/order information from a given legacy system is determined by summing the response times for all requests submitted to the legacy systems during the reporting period and dividing by the total number of legacy system requests for that month.

The response interval starts when the client application (LENS or TAG for CLECs and RNS or ROS for BellSouth) submits a request to the legacy system and ends when the appropriate response is returned to the client application. The number of accesses to the legacy systems during the reporting period which take less than 2.3 seconds, the number of accesses which take more than 6 seconds, and the number which are less than or equal to 6.3 seconds are also captured.

Calculation

Response Time = (a - b)

- a = Date & Time of Legacy Response
- b = Date & Time of Legacy Request

Average Response Time = c / d

- c = Sum of Response Times
- d = Number of Legacy Requests During the Reporting Period

Report Structure

- Not CLEC Specific
- Not Product/Service Specific
- Regional Level

Data Retained

Relating to CLEC Experience	Relating to BellSouth Performance
• Report Month • Legacy Contract (per reporting dimension) • Response Interval • Regional Scope	• Report Month • Legacy Contract (per reporting dimension) • Response Interval • Regional Scope

SQM Disaggregation - Analog/Benchmark

SQM Level of Disaggregation	SQM Analog/Benchmark
• **RSAG – Address** (Regional Street Address Guide-Address) – stores street address information used to validate customer addresses. CLECs and BellSouth query this legacy system. • **RSAG – TN** (Regional Street Address Guide-Telephone number) – contains information about facilities available and telephone numbers working at a given address.	

CLECs and BellSouth query this legacy system. • **ATLAS** (Application for Telephone Number Load Administration and Selection) – acts as a warehouse for storing telephone numbers that are available for assignment by the system. It enables CLECs and BellSouth service reps to select and reserve telephone numbers. CLECs and BellSouth query this legacy system. • **COFFI** (Central Office Feature File Interface) – stores information about product and service offerings and availability. CLECs query this legacy system. • **DSAP** (DOE Support Application) – provides due date information. CLECs and BellSouth query this legacy system. • **HAL/CRIS** (Hands-Off Assignment Logic/Customer Record Information System) – a system used to access the Business Office Customer Record Information System (BOCRIS). It allows BellSouth servers, including LENS, access to legacy systems. CLECs query this legacy system. • **P/SIMS** (Product/Services Inventory Management system) – provides information on capacity, tariffs, inventory and service availability. CLECs query this legacy system. • **OASIS** (Obtain Available Services Information Systems) – Information on feature and rate availability. BellSouth queries this legacy system.	

Table 1: Legacy System Access Times For RNS

System	Contract	Data	< 2.3 sec.	> 6 sec.	<= 6.3 sec.	Avg. Sec.	# of Calls
RSAG	RSAG-TN	Address	x	x	x	x	x
RSAG	RSAG-ADDR	Address	x	x	x	x	x
ATLAS	ATLAS-TN	TN	x	x	x	x	x
DSAP	DSAP	Schedule	x	x	x	x	x
CRIS	CRSACCTS	CSR	x	x	x	x	x
OASIS	OASISCAR	Feature/Service	x	x	x	x	x
OASIS	OASISLPC	Feature/Service	x	x	x	x	x
OASIS	OASISMTN	Feature/Service	x	x	x	x	x
OASIS	OASISBIG	Feature/Service	x	x	x	x	x

Table 2: Legacy System Access Times For R0S

System	Contract	Data	< 2.3 sec.	> 6 sec.	<= 6.3 sec.	Avg. sec.	# of Calls
RSAG	RSAG-TN	Address	x	x	x	x	x
RSAG	RSAG-ADDR	Address	x	x	x	x	x
ATLAS	ATLAS-TN	TN	x	x	x	x	x
DSAP	DSAP	Schedule	x	x	x	x	x
CRIS	CRSOCSR	CSR	x	x	x	x	x
OASIS	OASISBIG	Feature/Service	x	x	x	x	x

Table 3: Legacy System Access Times For LENS

System	Contract	Data	< 2.3 sec.	> 6 sec.	<6.3 sec.	Avg. sec.	# of Calls
RSAG	RSAG-TN	Address	x	x	x	x	x
RSAG	RSAG-ADDR	Address	x	x	x	x	x
ATLAS	ATLAS-TN	TN	x	x	x	x	x
DSAP	DSAP	Schedule	x	x	x	x	x
HAL	HAL/CRIS	CSR	x	x	x	x	x
COFFI	COFFI/USOC	Feature/Service	x	x	x	x	x
P/SIMS	PSIMS/ORB	Feature/Service	x	x	x	x	x

Table 4: Legacy System Access Times For TAG

System	Contract	Data	< 2.3 sec.	> 6 sec.	<6.3 sec.	Avg. sec.	# of Calls
RSAG	RSAG-TN	Address	x	x	x	x	x
RSAG	RSAG-ADDR	Address	x	x	x	x	x
ATLAS	ATLAS-TN	TN	x	x	x	x	x
ATLAS	ATLAS-MLH	TN	x	x	x	x	x
ATLAS	ATLAS-DID	TN	x	x	x	x	x
DSAP	DSAP	Schedule	x	x	x	x	x
CRIS	CRSECSRL	CSR	x	x	x	x	x
CRIS	CRSECSR	CSR	x	x	x	x	x

SEEM Measure

SEEM Measure		
Yes	Tier I	
	Tier II	X

Note: CLEC specific data is not available in this measure. Queries of this sort do not have company specific signatures.

SEEM Disaggregation - Analog/Benchmark

SEEM Disaggregation	SEEM Analog/Benchmark
• **RSAG – Address** (Regional Street Address Guide-Address) – stores street address information used to validate customer addresses. CLECs and BellSouth query this legacy system. • **RSAG – TN** (Regional Street Address Guide-Telephone number) – contains information about facilities available and telephone numbers working at a given address. CLECs and BellSouth query this legacy system. • **ATLAS** (Application for Telephone Number Load Administration and Selection) – acts as a warehouse for storing telephone numbers that are available for assignment by the system. It enables CLECs and BellSouth service reps to select and reserve telephone numbers. CLECs and BellSouth query this legacy system. • **COFFI** (Central Office Feature File Interface) – stores information about product and service offerings and availability. CLECs query this legacy system. • **DSAP** (DOE Support Application) – provides due date information. CLECs and BellSouth query this legacy system. • **HAL/CRIS** (Hands-Off Assignment Logic/Customer Record Information System) – a system used to access the	• Percent Response Received within 6.3 seconds: > 95% • Parity + 2 seconds

Business Office Customer Record Information System (BOCRIS). It allows BellSouth servers, including LENS, access to legacy systems. CLECs query this legacy system. • **P/SIMS** (Product/Services Inventory Management system) – provides information on capacity, tariffs, inventory and service availability. CLECs query this legacy system. • **OASIS** (Obtain Available Services Information Systems) – Information on feature and rate availability. BellSouth queries this legacy system.	

SEEM OSS Legacy Systems

System	BellSouth	CLEC
Telephone Number/Address		
RSAG-ADDR	RNS, ROS	TAG, LENS
RSAG-TN	RNS, ROS	TAG, LENS
ATLAS	RNS,ROS	TAG. LENS
Appointment Scheduling		
DSAP	RNS, ROS	TAG, LENS
CSR Data		
CRSACCTS	RNS	
CRSOCSR	ROS	
HAL/CRIS		LENS
CRSECSRL		TAG
CRSECSR		TAG
Service/Feature Availability		
OASISBIG	RNS, ROS	
PSIMS/ORB		LENS

OSS-2: Interface Availability (Pre-Ordering/Ordering)

Definition

Percent of time applications are functionally available as compared to scheduled availability. Calculations are based upon availability of applications and interfacing applications utilized by CLECs for pre-ordering and ordering. “Functional Availability” is defined as the number of hours in the reporting period that the applications/interfaces are available to users. “Scheduled Availability” is defined as the number of hours in the reporting period that the applications/interfaces are scheduled to be available.

Scheduled availability is posted on the Interconnection web site: (www.interconnection.bellsouth.com/oss/oss_hour.html)

Exclusions

- CLEC-impacting troubles caused by factors outside of BellSouth's purview, e.g., troubles in customer equipment, troubles in networks owned by telecommunications companies other than BellSouth, etc.
- Degraded service, e.g., slow response time, loss of non-critical functionality, etc.

Business Rules

This measurement captures the functional availability of applications/interfaces as a percentage of scheduled availability for the same systems. Only full outages are included in the calculations for this measure. Full outages are defined as occurrences of either of the following:

- Application/interfacing application is down or totally inoperative.
- Application is totally inoperative for customers attempting to access or use the application. This includes transport outages when they may be directly associated with a specific application.

Comparison to an internal benchmark provides a vehicle for determining whether or not CLECs and retail BST entities are given comparable opportunities for use of pre-ordering and ordering systems.

Calculation

Interface Availability (Pre-Ordering/Ordering) = (a / b) X 100

- a = Functional Availability
- b = Scheduled Availability

Report Structure

- Not CLEC Specific
- Not Product/Service Specific
- Regional Level

Data Retained

Relating to CLEC Experience	Relating to BellSouth Performance
• Report Month • Legacy Contract Type (per reporting dimension) • Regional Scope • Hours of Downtime	• Report Month • Legacy Contract Type (per reporting dimension) • Regional Scope • Hours of Downtime

SQM Disaggregation - Analog/Benchmark

SQM Level of Disaggregation	SQM Analog/Benchmark
• Regional Level	• >= 99.5%

OSS Interface Availability

Application	Applicable to	% Availability
EDI	CLEC	x
TAG	CLEC	x
LENS	CLEC	x
LEO	CLEC	x
LESOG	CLEC	x
LNP Gateway	CLEC	x
COG	CLEC	Under Development
SOG	CLEC	Under Development
DOM	CLEC	Under Development
DOE	CLEC/BellSouth	x
SONGS	CLEC/BellSouth	x
ATLAS/COFFI	CLEC/BellSouth	x
BOCRIS	CLEC/BellSouth	x
DSAP	CLEC/BellSouth	x
RSAG	CLEC/BellSouth	x
SOCS	CLEC/BellSouth	x
CRIS	CLEC/BellSouth	x

SEEM Measure

SEEM Measure		
Yes	Tier I	
	Tier II	X

SEEM Disaggregation - Analog/Benchmark

SEEM Disaggregation	SEEM Analog/Benchmark
• Regional Level	• >= 99.5%

SEEM OSS Interface Availability

Application	Applicable to	% Availability
EDI	CLEC	x
HAL	CLEC	x
LENS	CLEC	x
LEO Mainframe	CLEC	x
LESOG	CLEC	x
PSIMS	CLEC	x
TAG	CLEC	x

OSS-3: Interface Availability (Maintenance & Repair)

Definition

Percent of time applications are functionally available as compared to scheduled availability. Calculations are based upon availability of applications and interfacing applications utilized by CLECs for maintenance and repair. “Functional Availability” is defined as the number of hours in the reporting period that the applications/interfaces are available to users. “Scheduled Availability” is defined as the number of hours in the reporting period that the applications/interfaces are scheduled to be available.

Scheduled availability is posted on the Interconnection web site: (www.interconnection.bellsouth.com/oss/oss_hour.html)

Exclusions

- CLEC-impacting troubles caused by factors outside of BellSouth's purview, e.g., troubles in customer equipment, troubles in networks owned by telecommunications companies other than BellSouth, etc.
- Degraded service, e.g., slow response time, loss of non-critical functionality, etc.

Business Rules

This measurement captures the functional availability of applications/interfaces as a percentage of scheduled availability for the same systems. Only full outages are included in the calculations for this measure. Full outages are defined as occurrences of either of the following:

- Application/interfacing application is down or totally inoperative.
- Application is totally inoperative for customers attempting to access or use the application. This includes transport outages when they may be directly associated with a specific application.

Comparison to an internal benchmark provides a vehicle for determining whether or not CLECs and retail BST entities are given comparable opportunities for use of maintenance and repair systems.

Calculation

OSS Interface Availability (a / b) X 100

- a = Functional Availability
- b = Scheduled Availability

Report Structure

- Not CLEC Specific
- Not Product/Service Specific
- Regional Level

Data Retained

Relating to CLEC Experience	Relating to BellSouth Performance
• Availability of CLEC TAFI • Availability of LMOS HOST, MARCH, SOCS, CRIS, PREDICTOR, LNP and OSPCM • ECTA	• Availability of BellSouth TAFI • Availability of LMOS HOST, MARCH, SOCS, CRIS, PREDICTOR, LNP and OSPCM

SQM Disaggregation - Analog/Benchmark

SQM Level of Disaggregation	SQM Analog/Benchmark
• Regional Level	• >= 99.5%

OSS Interface Availability (M&R)

OSS Interface	% Availability
BST TAFI	x
CLEC TAFI	x
CLEC ECTA	x
BellSouth & CLEC	x
CRIS	x
LMOS HOST	x
LNP	x
MARCH	x
OSPCM	x
PREDICTOR	x
SOCS	x

SEEM Measure

SEEM Measure		
Yes	Tier I	
	Tier II	X

SEEM Disaggregation - Analog/Benchmark

SEEM Disaggregation	SEEM Analog/Benchmark
• Regional Level	• >= 99.5%

OSS Interface Availability (M&R)

OSS Interface	% Availability
CLEC TAFI	x
CLEC ECTA	x

OSS-4: Response Interval (Maintenance & Repair)

Definition

The response intervals are determined by subtracting the time a request is received on the BellSouth side of the interface from the time the response is received from the legacy system. Percentages of requests falling into each interval category are reported, along with the actual number of requests falling into those categories.

Exclusions

None

Business Rules

This measure is designed to monitor the time required for the CLEC and BellSouth interface system to obtain from BellSouth's legacy systems the information required to handle maintenance and repair functions. The clock starts on the date and time when the request is received on the BellSouth side of the interface and the clock stops when the response has been transmitted through that same point to the requester.

Note: The OSS Response Interval BellSouth Total Report is a combination of BellSouth Residence and Business Total.

Calculation

OSS Response Interval = (a - b)

- a = Query Response Date and Time
- b = Query Request Date and Time

Percent Response Interval (per category) = (c / d) X 100

- c = Number of Response Intervals in category "X"
- d = Number of Queries Submitted in the Reporting Period

where, "X" is <= 4, > 4 <= 10, <= 10, > 10, or > 30 seconds.

Report Structure

- Not CLEC Specific
- Not product/service specific
- Regional Level

Data Retained

Relating to CLEC Experience	Relating to BellSouth Performance
• CLEC Transaction Intervals	• BellSouth Business and Residential Transactions Intervals

SQM Disaggregation - Analog/Benchmark

SQM Level of Disaggregation	SQM Analog/Benchmark
• Regional Level	• Parity

Legacy System Access Times for M&R

System	BellSouth & CLEC	Count				
		<= 4	> 4 <= 10	<= 10	> 10	> 30
CRIS	x	x	x	x	x	x
DLETH	x	x	x	x	x	x
DLR	x	x	x	x	x	x
LMOS	x	x	x	x	x	x
LMOSupd	x	x	x	x	x	x
LNP	x	x	x	x	x	x
MARCH	x	x	x	x	x	x
OSPCM	x	x	x	x	x	x
Predictor	x	x	x	x	x	x
SOCS	x	x	x	x	x	x
NIW	x	x	x	x	x	x

SEEM Measure

SEEM Measure		
No	Tier I	
	Tier II	

SEEM Disaggregation - Analog/Benchmark

SEEM Disaggregation	SEEM Analog/Benchmark
• Not Applicable	• Not Applicable

PO-1: Loop Makeup - Response Time – Manual

Definition

This report measures the average interval and percent within the interval from the submission of a Manual Loop Makeup Service Inquiry (LMUSI) to the distribution of Loop Makeup information back to the CLEC.

Exclusions

- Inquiries, which are submitted electronically.
- Designated Holidays are excluded from the interval calculation.
- Weekend hours from 5:00PM Friday until 8:00AM Monday are excluded from the interval calculation.
- Canceled Inquiries.

Business Rules

The CLEC Manual Loop Makeup Service Inquiry (LMUSI) process includes inquiries submitted via mail or FAX to BellSouth's Complex Resale Support Group (CRSG).

This measurement combines three intervals:

1. From receipt of the Service Inquiry for Loop Makeup to hand off to the Service Advocacy Center (SAC) for "Look-up."
2. From SAC start date to SAC complete date.
3. From SAC complete date to date the Complex Resale Support Group (CRSG) distributes loop makeup information back to the CLEC.

The "Receive Date" is defined as the date the Manual LMUSI is received by the CRSG. It is counted as day Zero. LMU "Return Date" is defined as the date the LMU information is sent back to the CLEC from BellSouth. The interval calculation is reset to Zero when a CLEC initiated change occurs on the Manual LMU request.

Note: The Loop Make Up Service Inquiry Form does not require the CLEC to furnish the type of Loop. The CLEC determines whether the loop makeup will support the type of service they wish to order or not and qualifies the loop. If the loop makeup will support the service, a firm order LSR is submitted by the CLEC.

Calculation

Response Interval = (a - b)

- a = Date and Time LMUSI returned to CLEC
- b = Date and Time the LMUSI is received

Average Interval = (c / d)

- c = Sum of all Response Intervals
- d = Total Number of LMUSIs received within the reporting period

Percent within interval = (e / f) X 100

- e = Total LMUSIs received within the interval
- f = Total Number of LMUSIs processed within the reporting period

Report Structure

- CLEC Aggregate
- CLEC Specific
- Geographic Scope
  - State
  - Region
- Interval for manual LMUs:
  0 – <= 1 day
  >1 – <= 2 days
  >2 – <= 3 days
  0 - <= 3 days
  >3 – <= 6 days
  >6 – <= 10 days
  > 10 days
- Average Interval in days

Data Retained

Relating to CLEC Experience	Relating to BellSouth Performance
• Report Month • Total Number of Inquiries • SI Intervals • State and Region	• Not Applicable

SQM Disaggregation - Analog/Benchmark

SQM Level of Disaggregation	SQM Analog/Benchmark
• Loops	Benchmark • 95% <= 3 Business Days

SEEM Measure

SEEM Measure		
Yes	Tier I	X
	Tier II	X

SEEM Disaggregation - Analog/Benchmark

SEEM Disaggregation	SEEM Analog/Benchmark
• Loops	Benchmark • 95% <= 3 Business Days

PO-2: Loop Make Up - Response Time - Electronic

Definition

This report measures the average interval and the percent within the interval from the electronic submission of a Loop Makeup Service Inquiry (LMUSI) to the distribution of Loop Makeup information back to the CLEC.

Exclusions

- Manually submitted inquiries.
- Designated Holidays are excluded from the interval calculation.
- Canceled Requests.
- Scheduled OSS Maintenance.

Business Rules

The response interval starts when the CLEC's Mechanized Loop Makeup Service Inquiry (LMUSI) is submitted electronically through the Operational Support Systems interface, LENS, TAG or RoboTAG. It ends when BellSouth's Loop Facility Assignment and Control System (LFACS) responds electronically to the CLEC with the requested Loop Makeup data via LENS, TAG or RoboTAG Interfaces.

Note: The Loop Make Up Service Inquiry Form does not require the CLEC to furnish the type of Loop. The CLEC determines whether the loop makeup will support the type of service they wish to order or not and qualifies the loop. If the loop makeup will support the service, a firm order LSR is submitted by the CLEC. EDI is not a pre-ordering system, and, therefore, is not applicable in this measure.

Calculation

Response Interval = (a - b)

- a = Date and Time LMUSI returned to CLEC
- b = Date and Time the LMUSI is received

Average Interval = (c / d)

- c = Sum of all response intervals
- d = Total Number of LMUSIs received within the reporting period

Percent within interval = (e / f) X 100

- e = Total LMUSIs received within the interval
- f = Total Number of LMUSIs processed within the reporting period

Report Structure

- CLEC Aggregate
- CLEC Specific
- Geographic Scope
  - State
  - Region
- Interval for electronic LMUs:
  0 – <= 1 minute
  >1 – <= 5 minutes
  0 - <= 5 minutes
  > 5 – <= 8 minutes
  > 8 – <= 15 minutes
  > 15 minutes
- Average Interval in minutes

Data Retained

Relating to CLEC Experience	Relating to BellSouth Performance
• Report Month	• Not Applicable

• Legacy Contract • Response Interval • Regional Scope	

SQM Disaggregation - Analog/Benchmark

SQM Level of Disaggregation	SQM Analog/Benchmark
• Loops	Benchmark • 90% <= 5 Minutes (05/01/01) • 95% <= 1 Minute (08/01/01)

SEEM Measure

SEEM Measure		
Yes	Tier I	X
	Tier II	X

SEEM Disaggregation - Analog/Benchmark

SEEM Disaggregation	SEEM Analog/Benchmark
• Loop	• 90% <= 5 Minutes (05/01/01) • 95% <= 1 Minute (08/01/01)

Section 2: Ordering

O-1: Acknowledgement Message Timeliness

Definition

This measurement provides the response interval from the time an LSR or transmission (may contain multiple LSRs from one or more CLECs in multiple states) is electronically submitted via EDI or TAG respectively until an acknowledgement notice is sent by the system.

Exclusions

- Scheduled OSS Maintenance

Business Rules

The process includes EDI & TAG system functional acknowledgements for all messages/Local Service Requests (LSRs) which are electronically submitted by the CLEC. Users of EDI may package many LSRs into one transmission which will receive the acknowledgement message. EDI users may place multiple LSRs in one "envelope" requesting service in one or more states which will mask the identity of the state and CLEC. The start time is the receipt time of the message at BellSouth's side of the interface (gateway). The end time is when the acknowledgement is transmitted by BellSouth at BellSouth's side of the interface (gateway). If more than one CLEC uses the same ordering center (aggregator), an Acknowledgement Message will be returned to the "Aggregator". However, BellSouth will not be able to determine which specific CLEC or state this message represented.

Calculation

Response Interval = (a - b)

- a = Date and Time Acknowledgement Notices returned to CLEC
- b = Date and Time messages/LSRs electronically submitted by the CLEC via EDI or TAG respectively

Average Response Interval = (c / d)

- c = Sum of all Response Intervals
- d = Total number of electronically submitted messages/LSRs received, from CLECs via EDI or TAG respectively, in the Reporting Period.

Reporting Structure

- CLEC Aggregate
- CLEC Specific/Aggregator
- Geographic Scope
  - Region
- Electronically Submitted LSRs
  0 – <= 10 minutes
  >10 – <= 20 minutes
  >20 – <= 30 minutes
  0 – <= 30 minutes
  >30 – <= 45 minutes
  >45 – <= 60 minutes
  >60 – <= 120 minutes
  >120 minutes
- Average interval for electronically submitted messages/LSRs in minutes

Data Retained

Relating to CLEC Experience	Relating to BellSouth Performance
• Report Month • Record of Functional Acknowledgements	• Not Applicable

SQM Disaggregation - Analog/Benchmark

SQM Level of Disaggregation	SQM Analog/Benchmark
• EDI • TAG	• EDI - 90% <= 30 minutes (05/01/01) - 95% <= 30 minutes (08/01/01) • TAG – 95% <= 30 minutes

SEEM Measure

SEEM Measure		
Yes	Tier I	X
	Tier II	X

SEEM Disaggregation - Analog/Benchmark

SEEM Disaggregation	SEEM Analog/Benchmark
• EDI • TAG	• EDI - 90% <= 30 minutes (05/01/01) - 95% <= 30 minutes (08/01/01) • TAG – 95% <= 30 minutes

O-2: Acknowledgement Message Completeness

Definition

This measurement provides the percent of transmissions/LSRs received via EDI or TAG respectively, which are acknowledged electronically.

Exclusions

- Manually submitted LSRs
- Scheduled OSS Maintenance

Business Rules

EDI and TAG send Functional Acknowledgements for all transmissions/LSRs, which are electronically submitted by a CLEC. Users of EDI may package many LSRs from multiple states in one transmission. If more than one CLEC uses the same ordering center, an Acknowledgement Message will be returned to the "Aggregator", however, BellSouth will not be able to determine which specific CLEC this message represented. The Acknowledgement Message is returned prior to the determination of whether the transmission/ LSR will be partially mechanized or fully mechanized.

Calculation

Acknowledgement Completeness = (a / b) X 100

- a = Total number of Functional Acknowledgements returned in the reporting period for transmissions/LSRs electronically submitted by EDI or TAG respectively
- b = Total number of electronically submitted transmissions/LSRs received in the reporting period by EDI or TAG respectively

Report Structure

- CLEC Aggregate
- CLEC Specific/Aggregator
- Geographic Scope
  - Region

Note: The Order calls for Mechanized, Partially Mechanized, and Totally Mechanized, however, the Acknowledgement message is generated before the system recognizes whether this electronic transmission will be partially or fully mechanized.

Data Retained

Relating to CLEC Experience	Relating to BellSouth Performance
• Report Month • Record of Functional Acknowledgements	• Not Applicable

SQM Disaggregation - Analog/Benchmark

SQM Level of Disaggregation	SQM Analog/Benchmark
• EDI • TAG	• Benchmark: 100%

SEEM Measure

SEEM Measure		
Yes	Tier I	X
	Tier II	X

SEEM Disaggregation - Analog/Benchmark

SEEM Disaggregation	SEEM Analog/Benchmark
• EDI • TAG	• Benchmark: 100%

O-3: Percent Flow-Through Service Requests (Summary)

Definition

The percentage of Local Service Requests (LSR) and LNP Local Service Requests (LNP LSRs) submitted electronically via the CLEC mechanized ordering process that flow through and reach a status for a FOC to be issued, without manual intervention.

Exclusions

- Fatal Rejects
- Auto Clarification
- Manual Fallout
- CLEC System Fallout
- Scheduled OSS Maintenance

Business Rules

The CLEC mechanized ordering process includes all LSRs, including supplements (subsequent versions) which are submitted through one of the three gateway interfaces (TAG, EDI and LENS), that flow through and reach a status for a FOC to be issued, without manual intervention. These LSRs can be divided into two classes of service: Business and Residence, and two types of service: Resale, and Unbundled Network Elements (UNE). The CLEC mechanized ordering process does not include LSRs which are submitted manually (for example, fax and courier) or are not designed to flow through (for example, Manual Fallout.)

Definitions:

Fatal Rejects: Errors that prevent an LSR, submitted electronically by the CLEC, from being processed further. When an LSR is submitted by a CLEC, LEO/LNP Gateway will perform edit checks to ensure the data received is correctly formatted and complete. For example, if the PON field contains an invalid character, LEO/LNP Gateway will reject the LSR and the CLEC will receive a Fatal Reject.

Auto-Clarification: Clarifications that occur due to invalid data within the LSR. LESOG/LAUTO will perform data validity checks to ensure the data within the LSR is correct and valid. For example, if the address on the LSR is not valid according to RSAG, or if the LNP is not available for the NPA NXXX requested, the CLEC will receive an Auto-Clarification.

Manual Fallout: Planned Fallout that occur by design. Certain LSRs are designed to fallout of the Mechanized Order Process due to their complexity. These LSRs are manually processed by the LCSC. When a CLEC submits an LSR, LESOG/LAUTO will determine if the LSR should be forwarded to LCSC for manual handling. Following are the categories for Manual Fallout:

1. Complex*
2. Special pricing plans
3. Some Partial migrations
4. New telephone number not yet posted to BOCRIS
5. Pending order review required
6. CSR inaccuracies such as invalid or missing CSR data in CRIS
7. Expedites (requested by the CLEC)
8. Denials-restore and conversion, or disconnect and conver sion orders
9. Class of service invalid in certain states with some types of service
10. Low volume such as activity type “T” (move)
11. More than 25 business lines, or more than 15 loops
12. Transfer of calls option for the CLEC end users
13. Directory Listings (Indentions and Captions)

*See LSR Flow-Through Matrix following O-6 for a list of services, including complex services, and whether LSRs issued for the services are eligible to flow through.

Total System Fallout: Errors that require manual review by the LSCS to determine if the error is caused by the CLEC, or is due to BellSouth system functionality. If it is determined the error is caused by the CLEC, the LSR will be sent back to the CLEC for clarification. If it is determined the error is BellSouth caused, the LCSC representative will correct the error, and the LSR will continue to be processed.

Z Status: LSRs that receive a supplemental LSR submission prior to final disposition of the original LSR.

Calculation

Percent Flow Through = a / [b - (c + d + e + f)] X 100

- a = The total number of LSRs that flow through LESOG/LAUTO and reach a status for a FOC to be issued
- b = the number of LSRs passed from LEO/LNP Gateway to LESOG/LAUTO
- c = the number of LSRs that fall out for manual processing
- d = the number of LSRs that are returned to the CLEC for clarification
- e = the number of LSRs that contain errors made by CLECs
- f = the number of LSRs that receive a Z status

Percent Achieved Flow Through = a / [b-(c+d+e)] X 100

- a = the number of LSRs that flow through LESOG/LAUTO and reach a status for a FOC to be issued
- b = the number of LSRs passed from LEO/LNP Gateway to LESOG/LAUTO
- c = the number of LSRs that are returned to the CLEC for clarification
- d = the number of LSRs that contain errors made by CLECs
- e = the number of LSRs that receive Z status

Report Structure

- CLEC Aggregate
  - Region

Data Retained

Relating to CLEC Experience	Relating to BellSouth Performance
• Report Month • Total Number of LSRs Received, by Interface, by CLEC - TAG - EDI - LENS • Total Number of Errors by Type, by CLEC - Fatal Rejects - Auto Clarification - CLEC Caused System Fallout • Total Number of Errors by Error Code • Total Fallout for Manual Processing	• Report Month • Total Number of Errors By Type - Bellsouth System Error

SQM Disaggregation - Analog/Benchmark

SQM Level of Disaggregation	SQM Analog/Benchmark[2]
• Residence	• Benchmark: 95%
• Business	• Benchmark: 90%
• UNE	• Benchmark: 85%
• LNP	• Benchmark: 85%

SEEM Measure

SEEM Measure		
Yes	Tier I	
	Tier II	X

SEEM Disaggregation - Analog/Benchmark

SEEM Disaggregation	SEEM Analog/Benchmark[3]
• Residence	• Benchmark: 95%
• Business	• Benchmark: 90%
• UNE	• Benchmark: 85%
• LNP	• Benchmark: 85%

[2] *Benchmarks do not apply to the "Percent Achieved Flow Through."*

[3] *Benchmarks do not apply to the "Percent Achieved Flow Through."*

O-4: Percent Flow-Through Service Requests (Detail)

Definition

A detailed list, by CLEC, of the percentage of Local Service Requests (LSR) and LNP Local Service Requests (LNP LSRs) submitted electronically via the CLEC mechanized ordering process that flow through and reach a status for a FOC to be issued, without manual or human intervention.

Exclusions

- Fatal Rejects
- Auto Clarification
- Manual Fallout
- CLEC System Fallout
- Scheduled OSS Maintenance

Business Rules

The CLEC mechanized ordering process includes all LSRs, including supplements (subsequent versions) which are submitted through one of the three gateway interfaces (TAG, EDI, and LENS), that flow through and reach a status for a FOC to be issued, without manual intervention. These LSRs can be divided into two classes of service: Business and Residence, and three types of service: Resale, and Unbundled Network Elements (UNE). The CLEC mechanized ordering process does not include LSRs, which are submitted manually (for example, fax and courier) or are not designed to flow through (for example, Manual Fallout.)

Definitions:

Fatal Rejects: Errors that prevent an LSR, submitted electronically by the CLEC, from being processed further. When an LSR is submitted by a CLEC, LEO/LNP Gateway will perform edit checks to ensure the data received is correctly formatted and complete. For example, if the PON field contains an invalid character, LEO/LNP Gateway will reject the LSR and the CLEC will receive a Fatal Reject.

Auto-Clarification: Clarifications that occur due to invalid data within the LSR. LESOG/LAUTO will perform data validity checks to ensure the data within the LSR is correct and valid. For example, if the address on the LSR is not valid according to RSAG, or if the LNP is not available for the NPA NXXX requested, the CLEC will receive an Auto-Clarification.

Manual Fallout: Planned Fallout that occur by design. Certain LSRs are designed to fallout of the Mechanized Order Process due to their complexity. These LSRs are manually processed by the LCSC. When a CLEC submits an LSR, LESOG/LAUTO will determine if the LSR should be forwarded to LCSC for manual handling. Following are the categories for Manual Fallout:

1. Complex*
2. Special pricing plans
3. Some Partial migrations
4. New telephone number not yet posted to BOCRIS
5. Pending order review required
6. CSR inaccuracies such as invalid or missing CSR data in CRIS
7. Expedites (requested by the CLEC)
8. Denials-restore and conversion, or disconnect and conver sion orders
9. Class of service invalid in certain states with some types of service
10. Low volume such as activity type “T” (move)
11. More than 25 business lines, or more than 15 loops
12. Transfer of calls option for the CLEC end users
13. Directory Listings (Indentions and Captions)

*See LSR Flow-Through Matrix following O-6 for a list of services, including complex services, and whether LSRs issued for the services are eligible to flow through.

Total System Fallout: Errors that require manual review by the LSCS to determine if the error is caused by the CLEC, or is due to BellSouth system functionality. If it is determined the error is caused by the CLEC, the LSR will be sent back to the CLEC for clarification. If it is determined the error is BellSouth caused, the LCSC representative will correct the error, and the LSR will continue to be processed.

Z Status: LSRs that receive a supplemental LSR submission prior to final disposition of the original LSR.

Calculation

Percent Flow Through = a / [b - (c + d + e + f)] X 100

- a = The total number of LSRs that flow through LESOG/LAUTO and reach a status for a FOC to be issued
- b = the number of LSRs passed from LEO/LNP Gateway to LESOG/LAUTO
- c = the number of LSRs that fall out for manual processing
- d = the number of LSRs that are returned to the CLEC for clarification
- e = the number of LSRs that contain errors made by CLECs
- f = the number of LSRs that receive a Z status

Percent Achieved Flow Through = a / [b-(c+d+e)] X 100

- a = the number of LSRs that flow through LESOG/LAUTO and reach a status for a FOC to be issued
- b = the number of LSRs passed from LEO/LNP Gateway to LESOG/LAUTO
- c = the number of LSRs that are returned to the CLEC for clarification
- d = the number of LSRs that contain errors made by CLECs
- e = the number of LSRs that receive Z status

Report Structure

Provides the flow through percentage for each CLEC (by alias designation) submitting LSRs through the CLEC mechanized ordering process. The report provides the following:

- CLEC (by alias designation)
- Number of fatal rejects
- Mechanized interface used
- Total mechanized LSRs
- Total manual fallout
- Number of auto clarifications returned to CLEC
- Number of validated LSRs
- Number of BellSouth caused fallout
- Number of CLEC caused fallout
- Number of Service Orders Issued
- Base calculation
- CLEC error excluded calculation

Data Retained

Relating to CLEC Experience	Relating to BellSouth Performance
• Report Month • Total Number of LSRs Received, by Interface, by CLEC - TAG - EDI - LENS • Total Number of Errors by Type, by CLEC - Fatal Rejects - Auto Clarification - CLEC Errors • Total Number of Errors by Error Code • Total Fallout for Manual Processing	• Report Month • Total Number of Errors by Type - Bellsouth System Error

SQM Disaggregation - Analog/Benchmark

SQM Level of Disaggregation	SQM Analog/Benchmark[4]
• Residence	• Benchmark: 95%
• Business	• Benchmark: 90%
• UNE	• Benchmark: 85%
• LNP	• Benchmark: 85%

[4] *Benchmarks do not apply to the "Percent Achieved Flow Through."*

SEEM Measure

SEEM Measure		
Yes	Tier I	X
	Tier II	

SEEM Disaggregation - Analog/Benchmark

SEEM Disaggregation	SEEM Analog/Benchmark[5]
• Residence	• Benchmark: 95%
• Business	• Benchmark: 90%
• UNE	• Benchmark: 85%
• LNP	• Benchmark: 85%

[5] *Benchmarks do not apply to the "Percent Achieved Flow Through."*

O-5: Flow-Through Error Analysis

Definition

An analysis of each error type (by error code) that was experienced by the LSRs that did not flow through or reached a status for a FOC to be issued.

Exclusions

Each Error Analysis is error code specific, therefore exclusions are not applicable.

Business Rules

The CLEC mechanized ordering process includes all LSRs, including supplements (subsequent versions) which are submitted through one of the three gateway interfaces (TAG, EDI, and LENS), that flow through and reach a status for a FOC to be issued. The CLEC mechanized ordering process does not include LSRs which are submitted manually (for example, fax and courier).

Calculation

Total for each error type.

Report Structure

Provides an analysis of each error type (by error code). The report is in descending order by count of each error code and provides the following:

- Error Type (by error code)
- Count of each error type
- Percent of each error type
- Cumulative percent
- Error Description
- CLEC Caused Count of each error code
- Percent of aggregate by CLEC caused count
- Percent of CLEC caused count
- BellSouth Caused Count of each error code
- Percent of aggregate by BellSouth caused count
- Percent of BellSouth by BellSouth caused count

Data Retained

Relating to CLEC Experience	Relating to BellSouth Performance
• Report Month • Total Number of LSRs Received • Total Number of Errors by Type (by error code) - CLEC Caused Error	• Report Month • Total Number of Errors by Type (by error code) - BellSouth System Error

SQM Disaggregation - Analog/Benchmark

SQM Level of Disaggregation	SQM Analog/Benchmark
• Not Applicable	• Not Applicable

SEEM Measure

SEEM Measure		
No	Tier I	
	Tier II	

SEEM Disaggregation - Analog/Benchmark

SEEM Disaggregation	SEEM Analog/Benchmark
• Not Applicable	• Not Applicable

O-6: CLEC LSR Information

Definition

A list with the flow through activity of LSRs by CC, PON and Ver, issued by each CLEC during the report period.

Exclusions

- Fatal Rejects
- LSRs submitted manually

Business Rules

The CLEC mechanized ordering process includes all LSRs, including supplements (subsequent versions) which are submitted through one of the three gateway interfaces (TAG, EDI, and LENS), that flow through and reach a status for a FOC to be issued. The CLEC mechanized ordering process does not include LSRs which are submitted manually (for example, fax and courier).

Calculation

Not Applicable

Report Structure

Provides a list with the flow through activity of LSRs by CC, PON and Ver, issued by each CLEC during the report period with an explanation of the of the columns and content. This report is available on a CLEC specific basis. The report provides the following for each LSR.

- CC
- PON
- Ver
- Timestamp
- Type
- Err #
- Note or Error Description

Data Retained

Relating to CLEC Experience	Relating to BellSouth Performance
• Report Month • Record of LSRs Received by CC, PON and Ver • Record of Timestamp, Type, Err # and Note or Error Description for each LSR by CC, PON and Ver	• Not Applicable

SQM Disaggregation - Analog/Benchmark

SQM Level of Disaggregation	SQM Analog/Benchmark
• Not Applicable	• Not Applicable

SEEM Measure

SEEM Measure		
No	Tier I	
	Tier II	

SEEM Disaggregation - Analog/Benchmark

SEEM Disaggregation	SEEM Analog/Benchmark
• Not Applicable	• Not Applicable

LSR Flow Through Matrix

Product	Product Type	Reqtype	ACT Type	F/T[3]	Complex Service	Complex Order	Planned Fallout For Manual Handling[1]	EDI	TAG[2]	LENS[4]
2 wire analog DID trunk port	U,C	A	N,T	No	UNE	Yes	NA	N	N	N
2 wire analog port	U	A	N,T	No	UNE	No	Yes	Y	Y	N
2 wire ISDN digital line	U,C	A	N,T	No	UNE	Yes	NA	N	N	N
2 wire ISDN digital loop	U,C	A	N,T	Yes	UNE	Yes	No	Y	Y	N
3 Way Calling	R,B	E,M	N,C,T,V,W	Yes	No	No	No	Y	Y	Y
4 wire analog voice grade loop	U,C	A	N,T	Yes	UNE	Yes	No	Y	Y	N
4 wire DSO & PRI digital loop	U,C	A	N,T	No	UNE	Yes	NA	N	N	N
4 wire DS1 & PRI digital loop	U,C	A	N,T	No	UNE	Yes	NA	N	N	N
4 wire ISDN DSI digital trunk ports	U,C	A	N,T	No	UNE	Yes	NA	N	N	N
Accupulse	C	E	N,C,T,V,W	No	Yes	Yes	NA	N	N	N
ADSL	R,B,C	E	V,W	No	UNE	No	No	Y	Y	N
Area Plus	R,B	E,M	N,C,T,V,W	Yes	No	No	No	Y	Y	Y
Basic Rate ISDN	U,C	A	N,T	No	Yes	Yes	Yes	Y	Y	N
Basic Rate ISDN 2 Wire	C	E	C, D,T,V,W	No	Yes	Yes	Yes	Y	Y	N
Basic Rate ISDN 2 Wire	C	E	N,T	No	Yes	Yes	N/A	N	N	N
Basic Rate ISDN 2 Wire UNE P	C	M	N,C,D,V	No	YES	Yes	N/A	N	N	N
Analog Data/Private Line	C	E	N, C, T, V, W, D, P, Q	No	Yes	Yes	N/A	N	N	N
Call Block	R,B	E,B,M	N,C,T,V,W	Yes	No	No	No	Y	Y	Y
Call Forwarding	R,B	E,B,M	N,C,T,V,W	Yes	No	No	No	Y	Y	Y
Call Return	R,B	E,B,M	N,C,T,V,W	Yes	No	No	No	Y	Y	Y
Call Selector	R,B	E,B,M	N,C,T,V,W	Yes	No	No	No	Y	Y	Y
Call Tracing	R,B	E,B,M	N,C,T,V,W	Yes	No	No	No	Y	Y	Y
Call Waiting	R,B	E,B,M	N,C,T,V,W	Yes	No	No	No	Y	Y	Y
Call Waiting Deluxe	R,B	E,B,M	N,C,T,V,W	Yes	No	No	No	Y	Y	Y
Caller ID	R,B	E,B,M	N,C,T,V,W	Yes	No	No	No	Y	Y	Y
CENTREX	C	P	V,P	No	Yes	Yes	NA	N	N	N
DID ACT W	C	N	W	No	Yes	Yes	Yes	Y	Y	Y
Digital Data Transport	U	E	N,C,T,V,W	No	UNE	Yes	NA	N	N	N
Directory Listing Indentions	B,U	B,C,E,F, J,M,N	N,C,T,R,V,W,P,Q	No	No	No	Yes	Y	Y	Y
Directory Listings Captions	R,B,U	B,C,E,F, J,M,N	N,C,T,R,V,W,P,Q	No	No	Yes	Yes	Y	Y	Y
Directory Listings (simple)	R,B,U	B,C,E,F, J,M,N	N,C,T,R,V,W,P,Q	Yes	No	No	No	Y	Y	Y
DS3	U	A,M	N,C,V	No	UNE	Yes	NA	N	N	N
DS1Loop	U	A,M	N,C,V	Yes	UNE	Yes	No	Y	Y	N
DSO Loop	U	A, B	N,C,D,T,V	Yes	UNE	Yes	No	Y	Y	N
Enhanced Caller ID	R,B	E,M	C,D,N,T,V,W	Yes	No	No	No	Y	Y	Y
ESSX	C	P	C,D,T,V,S,B,W,L ,P,Q	No	Yes	Yes	NA	N	N	N
Flat Rate/Business	B	E, M	C,D,N,T,V,W	Yes	No	No	No	Y	Y	Y
Flat Rate/Residence	R	E, M	C,D,N,T,V,W	Yes	No	No	No	Y	Y	Y
FLEXSERV	C	E	N,C,D,T,V,W,P,Q	No	Yes	Yes	NA	N	N	N
Frame Relay	C	E	N,C,D,V,W	No	Yes	Yes	NA	N	N	N
FX	C	E	N,C,D,T,V,W,P,Q	No	Yes	Yes	NA	N	N	N
Ga. Community Calling	R,B	E, M	C,D,N,T,V,W	Yes	No	No	No	Y	Y	Y
HDSL	U	A	N,C,D	Yes	UNE	No	No	Y	Y	N
Hunting MLH	R,B	E, M	C,D,N,T,V,W	No	C/S4	C/S	Yes	Y	Y	N
Hunting Series Completion	R,B	E, M	C,D,N,T,V,W	Yes	C/S	C/S	No	Y	Y	Y
INP to LNP Conversion	U	C	C	No	UNE	Yes	Yes	Y	Y	N

Product	Product Type	Reqtype	ACT Type	F/T[3]	Complex Service	Complex Order	Planned Fallout For Manual Handling[1]	EDI	TAG[2]	LENS[4]
LightGate	C	E	N,C,D,T,V,W,P,Q	No	Yes	Yes	NA	N	N	N
Line Sharing	U	A	C,D	Yes	UNE	No	No	Y	Y	Y
Local Number Portability	U	C	C,D,P,V,Q	Yes	UNE	Yes	No	Y	Y	N
LNP With Complex Listing	C	C	P,V,Q,W	No	UNE	Yes	Yes	Y	Y	N
LNP with Partial Migration	U	C	D,P,V,Q	No	UNE	Yes	Yes	Y	Y	N
LNP with Complex Services	C	C	P,V,Q,W	No	UNE	Yes	Yes	Y	Y	N
Loop+INP	U	B	D,P,V,Q	Yes	UNE	No	No	Y	Y	N
Loop+LNP	U	B	C,D,N,V	Yes	UNE	No	No	Y	Y	N
Measured Rate/Bus	R,B	E,M	C,D,T,N,V,W	Yes	No	No	No	Y	Y	Y
Measured Rate/Res	R,B	E,M	C,D,T,N,V,W	Yes	No	No	No	Y	Y	Y
Megalink	C	E	N,V,W,T,D,C,P,Q	No	Yes	Yes	NA	N	N	N
Megalink-T1	C	E,M	N,V,W,T,D,C,P,Q	No	Yes	Yes	NA	N	N	N
Memory Call	R,B	E, M	C,D,N,T,V,W	Yes	No	No	No	Y	Y	Y
Memory Call Ans. Svc.	R,B	E, M	C,D,N,T,V,W	Yes	No	No	No	Y	Y	Y
Multiserv	C	P	N,C,D,T,V,S,B, W,L,P,Q	No	Yes	Yes	NA	N	N	N
Native Mode LAN Interconnection (NMLI)	C	E	N,C,D,V,W	No	Yes	Yes	NA	N	N	N
Off-Prem Stations	C	E	N,C,D,V,W,T,P,Q	No	Yes	Yes	NA	N	N	N
Optional Calling Plan	R,B	E, M	N	Yes	No	No	No	Y	Y	Y
Package/Complete Choice and Area Plus	R,B	E, M	N,T,C,V,W	Yes	No	No	No	Y	Y	Y
Pathlink Primary Rate ISDN	C	E	N,C,D,T,V,W,P,Q	No	Yes	Yes	NA	N	N	N
Pay Phone Provider	B	E	C,D,T,N,V,W	No	No	No	NA	N	N	N
PBX Standalone Port	C	F	N,C,D	No	Yes	Yes	Yes	Y	Y	N
PBX Trunks	R,B	E	N,C,D,V,W,T,P,Q	No	Yes	Yes	Yes	Y	Y	N
Port/Loop PBX	U	M	A,C,D,V	No	No	No	Yes	Y	Y	N
Port/Loop Simple	U	M	A,C,D,V	Yes	No	No	Yes	Y	Y	Y
Preferred Call Forward	R,B,U	E	C,D,T,N,V,W	Yes	No	No	No	Y	Y	Y
RCF Basic	R,B	E	N,D,W,T,F	Yes	No	No	No	Y	Y	Y
Remote Access to CF	R,B	E,M	C,D,T,N,V,W	Yes	No	No	No	Y	Y	Y
Repeat Dialing	R,B	E,M	C,D,T,N,V,W	Yes	No	No	No	Y	Y	Y
Ringmaster	R,B	E,M	C,D,T,N,V,W	Yes	No	No	No	Y	Y	Y
Smartpath	R,B	E	C,D,T,N,V,W	No	Yes	Yes	NA	N	N	N
SmartRING	C	E	N,D,C,V,W	No	Yes	Yes	NA	N	N	N
Speed Calling	R,B	E	C,D,T,N,V,W	Yes	No	No	No	Y	Y	Y
Synchronet	C	E	N	Yes	Yes	Yes	Yes	Y	Y	N
Tie Lines	C	E	N,C,D,V,W,T,P,Q	No	Yes	Yes	NA	N	N	N
Touchtone	R,B	E	C,D,T,N,V,W	Yes	No	No	No	Y	Y	Y
Unbundled Loop-Analog 2W, SL1, SL2	U	A,B	C,D,T,N,V,W	Yes	UNE	No	No	Y	Y	Y
WATS	R,B	E	W,D	No	Yes	Yes	NA	N	N	N
XDSL	C,U	A,B	N,T,C,V,D	Yes	UNE	No	No	Y	Y	N
XDSL Extended LOOP	C,U	A,B	N,T,C,V,D	No	UNE	Yes	NA	N	N	N
Collect Call Block	R,B	E	N,T,C,V,W,D	Yes	No	No	No	Y	Y	Y
900 Call Block	R,B	E	N,T,C,V,W,D	Yes	No	No	No	Y	Y	Y
3rd Party Call Block	R,B	E	N,T,C,V,W,D	Yes	No	No	No	Y	Y	Y
Three Way Call Block	R,B	E	N,T,C,V,W,D	Yes	No	No	No	Y	Y	Y
PIC/LPIC Change	R,B	E	T,C,V,	Yes	No	No	No	Y	Y	Y
PIC/LPIC Freeze	R,B	E	N,T,C,V	Yes	No	No	No	Y	Y	Y

Note[1]: Planned Fallout for Manual Handling denotes those services that are electronically submitted and are not intended to flow through due to the complexity of the service.

Note[2]: The TAG column includes those LSRs submitted via Robo TAG.

Note[3]: For all services that indicate 'No' for flow-through, the following reasons, in addition to errors or complex services, also prompt manual handling: Expedites from CLECs, special pricing plans, denials restore and conversion or disconnect and conversion both required, partial migrations (although conversions-as-is flow through for issue 9), class of service invalid in certain states with some TOS e.g. government, or cannot be changed when changing main TN on C activity, low volume e.g. activity type T=move, pending order review required, more than 25 business lines, CSR inaccuracies such as invalid or missing CSR data in CRIS, Directory listings – Indentions, Directory listings – Captions, transfer of calls option for CLEC end user – new TN not yet posted to BOCRIS. Many are unique to the CLEC environment.

Note[4]: Services with C/S in the Complex Service and/or the Complex Order columns can be either complex or simple.

Note[5]: EELs are manually ordered.

Note[6]: LSRs submitted for Resale Products and Services for which there is a temporary promotion or discount plan will be processed identically to those LSRs ordering the same Products or Services without a promotion or discount plan.

O-7: Percent Rejected Service Requests

Definition

Percent Rejected Service Request is the percent of total Local Service Requests (LSRs) received which are rejected due to error or omission. An LSR is considered valid when it is submitted by the CLEC and passes edit checks to insure the data received is correctly formatted and complete.

Exclusions

- Service Requests canceled by the CLEC prior to being rejected/clarified.
- Scheduled OSS Maintenance

Business Rules

Fully Mechanized: An LSR is considered "rejected" when it is submitted electronically but does not pass LEO edit checks in the ordering systems (EDI, LENS, TAG, LEO, LESOG) and is returned to the CLEC without manual intervention. There are two types of "Rejects" in the Mechanized category:

A **Fatal Reject** occurs when a CLEC attempts to electronically submit an LSR but required fields are either not populated or incorrectly populated and the request is returned to the CLEC before it is considered a valid LSR.

Fatal rejects are reported in a separate column, and for informational purposes ONLY. Fatal rejects are excluded from the calculation of the percent of total LSRs rejected or the total number of rejected LSRs.

An **Auto Clarification** occurs when a valid LSR is electronically submitted but rejected from LESOG because it does not pass further edit checks for order accuracy.

Partially Mechanized: A valid LSR, which is electronically submitted (via EDI, LENS, TAG) but cannot be processed electronically and "falls out" for manual handling. It is then put into "clarification" and sent back (rejected) to the CLEC.

Total Mechanized: Combination of Fully Mechanized and Partially Mechanized LSRs electronically submitted by the CLEC.

Non-Mechanized: LSRs which are faxed or mailed to the LCSC for processing and "clarified" (rejected) back to the CLEC by the BellSouth service representative.

Interconnection Trunks: Interconnection Trunks are ordered on Access Service Requests (ASRs). ASRs are submitted to and processed by the Interconnection Purchasing Center (IPC). Trunk data is reported separately.

Calculation

Percent Rejected Service Requests = (a / b) X 100

- a = Total Number of Rejected Service Requests in the Reporting Period
- b = Total Number of Service Requests Received in the Reporting Period

Report Structure

- Fully Mechanized, Partially Mechanized, Total Mechanized, Non-Mechanized
- CLEC Specific
- CLEC Aggregate
- Geographic Scope
  - State
  - Region
- Product Specific Percent Rejected
- Total Percent Rejected

Data Retained

Relating to CLEC Experience	Relating to BellSouth Performance
• Report Month • Total Number of LSRs • Total Number of Rejects • State and Region • Total Number of ASRs (Trunks)	• Not Applicable

SQM Disaggregation - Analog/Benchmark

SQM Level of Disaggregation	SQM Analog/Benchmark
Mechanized, Partially Mechanized and Non-Mechanized • Resale - Residence • Resale - Business • Resale – Design (Special) • Resale PBX • Resale Centrex • Resale ISDN • LNP (Standalone) • INP (Standalone) • 2W Analog Loop Design • 2W Analog Loop Non-Design • 2W Analog Loop With INP Design • 2W Analog Loop With INP Non-Design • 2W Analog Loop With LNP Design • 2W Analog Loop With LNP Non-Design • UNE Loop + Port Combinations • Switch Ports • UNE Combination Other • UNE xDSL (ADSL, HDSL, UCL) • Line Sharing • UNE ISDN Loop • UNE Other Design • UNE Other Non-Design • Local Interoffice Transport • Local Interconnection Trunks	• Diagnostic

SEEM Measure

SEEM Measure		
No	Tier I	
	Tier II	

SEEM Disaggregation - Analog/Benchmark

SEEM Disaggregation	SEEM Analog/Benchmark
• Not Applicable	• Not Applicable

O-8: Reject Interval

Definition

Reject Interval is the average reject time from receipt of an LSR to the distribution of a Reject. An LSR is considered valid when it is submitted by the CLEC and passes edit checks to insure the data received is correctly formatted and complete.

Exclusions

- Service Requests canceled by CLEC prior to being rejected/clarified
- Designated Holidays are excluded from the interval calculation
- LSRs which are identified and classified as "Projects"
- The following hours for Partially mechanized and Non-mechanized LSRs are excluded from the interval calculation:

  Residence Resale Group – Monday through Saturday 7:00PM until 7:00AM
  From 7:00 PM Saturday until 7:00 AM Monday

  Business Resale, Complex, UNE Groups – Monday through Friday 6:00PM until 8:00AM
  From 6:00 PM Friday until 8:00 AM Monday.

  The hours excluded will be altered to reflect changes in the Center operating hours. The LCSC will accept faxed LSRs only during posted hours of operation.

  The interval will be the amount of time accrued from receipt of the LSR until normal closing of the center if an LSR is worked using overtime hours.

  In the case of a Partially Mechanized LSR received and worked after normal business hours, the interval will be set at one (1) minute.

- Scheduled OSS Maintenance

Business Rules

Fully Mechanized: The elapsed time from receipt of a valid electronically submitted LSR (date and time stamp in EDI, LENS or TAG) until the LSR is rejected (date and time stamp or reject in EDI, TAG or LENS). Auto Clarifications are considered in the Fully Mechanized category.

Partially Mechanized: The elapsed time from receipt of a valid electronically submitted LSR (date and time stamp in EDI, LENS or TAG) until it falls out for manual handling. The stop time on partially mechanized LSRs is when the LCSC Service Representative clarifies the LSR back to the CLEC via LENS, EDI, or TAG.

Total Mechanized: Combination of Fully Mechanized and Partially Mechanized LSRs which are electronically submitted by the CLEC.

Non-Mechanized: The elapsed time from receipt of a valid LSR (date and time stamp of FAX or date and time mailed LSR is received in the LCSC) until notice of the reject (clarification) is returned to the CLEC via LON.

Interconnection Trunks: Interconnection Trunks are ordered on Access Service Requests (ASRs). ASRs are submitted to and processed by the Local Interconnection Service Center (LISC). Trunk data is reported separately. All interconnection trunks are counted in the non-mechanized category.

Calculation

Reject Interval = (a - b)

- a = Date and Time of Service Request Rejection
- b = Date and Time of Service Request Receipt

Average Reject Interval = (c / d)

- c = Sum of all Reject Intervals
- d = Number of Service Requests Rejected in Reporting Period

Report Structure

- CLEC Specific
- CLEC Aggregate
- Fully Mechanized, Partially Mechanized, Total Mechanized, Non-Mechanized
- Geographic Scope

- State
- Region

• Mechanized:
0 - <= 4 minutes
>4 - <= 8 minutes
>8 - <= 12 minutes
>12 - <= 60 minutes
0 - <= 1 hour
>1 - <= 4 hours
>4 - <= 8 hours
>8 - <= 12 hours
>12 - <= 16 hours
>16 - <= 20 hours
>20 - <= 24 hours
>24 hours

• Partially Mechanized:
0 - <= 1 hour
>1 - <= 4 hours
>4 - <= 8 hours
>8 - <= 10 hours
0 - <= 10 hours
>10 - <= 18 hours
0 - <= 18 hours
>18 - <= 24 hours
>24 hours

• Non-mechanized:
0 - <= 1 hour
>1 - <= 4 hours
>4 - <= 8 hours
>8 - <= 12 hours
>12 - <= 16 hours
>16 - <= 20 hours
>20 - <= 24 hours
0 - <= 24 hours
> 24 hours

• Trunks:
<= 4 days
>4 - <= 8 days
>8 - <= 12 days
>12 - <= 14 days
>14 - <= 20 days
>20 days

Data Retained

Relating to CLEC Experience	Relating to BellSouth Performance
Report Month • Reject Interval • Total Number of LSRs • Total Number of Rejects • State and Region • Total Number of ASRs (Trunks)	• Not Applicable

SQM Disaggregation - Analog/Benchmark

SQM Level of Disaggregation	SQM Analog/Benchmark
• Resale - Residence • Resale - Business • Resale - Design (Special) • Resale PBX • Resale Centrex	• Mechanized: - 97% <= I Hour • Partially Mechanized: - 85% <= 24 hours - 85% <= 18 Hours (05/01/01)

• Resale ISDN • LNP (Standalone) • INP (Standalone) • 2W Analog Loop Design • 2W Analog Loop Non-Design • 2W Analog Loop With INP Design • 2W Analog Loop With INP Non-Design • 2W Analog Loop With LNP Design • 2W Analog Loop With LNP Non-Design • UNE Loop + Port Combinations • Switch Ports • UNE Combination Other • UNE xDSL (ADSL, HDSL, UCL) • Line Sharing • UNE ISDN Loops • UNE Other Non-Design • Local Interoffice Transport • UNE Other Design	- 85% <= 10 Hours (08/01/01) • Non-Mechanized: - 85% <= 24 hours
• Local Interconnection Trunks	• Trunks: - 85% <= 4 Days

SEEM Measure

SEEM Measure		
Yes	Tier I	X
	Tier II	X

SEEM Disaggregation - Analog/Benchmark

SEEM Disaggregation	SEEM Analog/Benchmark
• Fully Mechanized	• 97% <= 1 Hour
• Partially Mechanized	• 85% <= 24 Hours • 85% <= 18 Hours (05/01/01) • 85% <= 10 Hours (08/01/01)
• Non-Mechanized	• 85% <= 24 Hours

O-9: Firm Order Confirmation Timeliness

Definition

Interval for Return of a Firm Order Confirmation (FOC Interval) is the average response time from receipt of valid LSR to distribution of a Firm Order Confirmation.

Exclusions

- Rejected LSRs
- Designated Holidays are excluded from the interval calculation
- LSRs which are identified and classified as "Projects"
- The following hours for Partially Mechanized and Non-mechanized LSRs are excluded from the interval calculation:

  Residence Resale Group – Monday through Saturday 7:00PM until 7:00AM
  From 7:00 PM Saturday until 7:00 AM Monday.

  Business Resale, Complex, UNE Groups – Monday through Friday 6:00PM until 8:00AM
  From 6:00 PM Friday until 8:00 AM Monday.

  The hours excluded will be altered to reflect changes in the Center operating hours. The LCSC will accept faxed LSRs only during posted hours of operation.

  The interval will be the amount of time accrued from receipt of the LSR until normal closing of the center if an LSR is worked using overtime hours.

  In the case of a Partially Mechanized LSR received and worked after normal business hours, the interval will be set at one (1) minute.

- Scheduled OSS Maintenance

Business Rules

- **Fully Mechanized:** The elapsed time from receipt of a valid electronically submitted LSR (date and time stamp in EDI, LENS or TAG) until the LSR is processed, appropriate service orders are generated and a Firm Order Confirmation is returned to the CLEC via EDI, LENS or TAG.
- **Partially Mechanized:** The elapsed time from receipt of a valid electronically submitted LSR (date and time stamp in EDI, LENS, or TAG) which falls out for manual handling until appropriate service orders are issued by a BellSouth service representative via Direct Order Entry (DOE) or Service Order Negotiation Generation System (SONGS) to SOCS and a Firm Order Confirmation is returned to the CLEC via EDI, LENS, or TAG.
- **Total Mechanized:** Combination of Fully Mechanized and Partially Mechanized LSRs which are electronically submitted by the CLEC.
- **Non-Mechanized:** The elapsed time from receipt of a valid paper LSR (date and time stamp of FAX or date and time paper LSRs received in LCSC) until appropriate service orders are issued by a BellSouth service representative via Direct Order Entry (DOE) or Service Order Negotiation Generation System (SONGS) to SOCS and a Firm Order Confirmation is sent to the CLEC via LON.
- **Interconnection Trunks:** Interconnection Trunks are ordered on Access Service Requests (ASRs). ASRs are submitted to and processed by the Local Interconnection Service Center (LISC). Trunk data is reported separately.

Calculation

Firm Order Confirmation Interval = (a - b)

- a = Date & Time of Firm Order Confirmation
- b = Date & Time of Service Request Receipt)

Average FOC Interval = (c / d)

- c = Sum of all FOC Intervals
- d = Total Number of Service Requests Confirmed in Reporting Period

FOC Interval Distribution (for each interval) = (e / f) X 100

- e = Service Requests Confirmed in interval
- f = Total Service Requests Confirmed in the Reporting Period

Report Structure

- Fully Mechanized, Partially Mechanized, Total Mechanized, Non-Mechanized
  - CLEC Specific
  - CLEC Aggregate
- Geographic Scope
  - State
  - Region
- Fully Mechanized:
  0 - <= 15 minutes
  >15 - <= 30 minutes
  >30 - <= 45 minutes
  >45 - <= 60 minutes
  >60 - <= 90 minutes
  >90 - <= 120 minutes
  >120 - <= 180 minutes
  0 - <= 3 hours
  >3 - <= 6 hours
  >6 - <= 12 hours
  >12 - <= 24 hours
  >24 - <= 48 hours
  >48 hours
- Partially Mechanized:
  0 - <= 4 hours
  >4 - <= 8 hours
  >8 - <= 10 hours
  0 - <= 10 hours
  >10 - <= 18 hours
  0 - <= 18 hours
  >18 - <= 24 hours
  0 - <= 24 hours
  >24 - <= 48 hours
  >48 hours
- Non-Mechanized:
  0 - <= 4 hours
  >4 - <= 8 hours
  >8 - <= 12 hours
  >12 - <= 16 hours
  >16 - <= 20 hours
  >20 - <= 24 hours
  >24 - <= 36 hours
  0 - <= 36 hours
  >36 - <= 48 hours
  >48 hours
- Trunks:
  0 - <= 5 days
  >5 - <= 10 days
  0 - <= 10 days
  >10 - <= 15 days
  >15 - <= 20 days
  >20 days

Data Retained

Relating to CLEC Experience	Relating to BellSouth Performance
• Report Month • Interval for FOC • Total Number of LSRs • State and Region • Total Number of ASRs (Trunks)	• Not Applicable

SQM Disaggregation - Analog/Benchmark

SQM Level of Disaggregation	SQM Analog/Benchmark
• Resale – Residence • Resale – Business • Resale – Design (Special) • Resale PBX • Resale Centrex • Resale ISDN • LNP (Standalone) • INP(Standalone) • 2W Analog Loop Design • 2W Analog Loop Non-Design • 2W Analog Loop With INP Design • 2W Analog Loop With INP Non-Design • 2W Analog Loop With LNP Design • 2W Analog Loop With LNP Non-Design • UNE Loop + Port Combinations • Switch Ports • UNE Combination Other • UNE xDSL (ADSL, HDSL, UCL) • Line Sharing • UNE ISDN Loops • UNE Other Design • UNE Other Non-Design • Local Interoffice Transport	• Mechanized: - 95% <= 3 Hours • Partially Mechanized: - 85% <= 24 Hours - 85% <= 18 Hours (05/01/01) - 85% <= 10 Hours (08/01/01) • Non-mechanized: - 85% <= 36 Hours
• Local Interconnection Trunks	• Trunks: - 95% <= 10 Days

SEEM Measure

SEEM Measure		
Yes	Tier I	X
	Tier II	X

SEEM Disaggregation - Analog/Benchmark

SEEM Disaggregation	SEEM Analog/Benchmark
• Fully Mechanized	• 95% <= 3 Hours
• Partially Mechanized	• 85% <= 24 Hours • 85% <= 18 Hours (05/01/01) • 85% <= 10 Hours (08/01/01)
• Non-Mechanized	• 85% <= 36 Hours
• IC Trunks	• 95% <= 10 Days

O-10: Service Inquiry with LSR Firm Order Confirmation (FOC) Response Time Manual[6]

Definition

This report measures the interval and the percent within the interval from the submission of a Service Inquiry (SI) with Firm Order LSR to the distribution of a Firm Order Confirmation (FOC).

Exclusions

- Designated Holidays are excluded from the interval calculation
- Weekend hours from 5:00PM Friday until 8:00AM Monday are excluded from the interval calculation of the Service Inquiry
- Canceled Requests
- Electronically Submitted Requests
- Scheduled OSS Maintenance

Business Rules

This measurement combines four intervals:

1. From receipt of Service Inquiry with LSR to hand off to the Service Advocacy Center (SAC) for Loop 'Look-up'.
2. From SAC start date to SAC complete date.
3. From SAC complete date to the Complex Resale Support Group (CRSG) complete date with hand off to LCSC.
4. From receipt of SI/LSR in the LCSC to Firm Order Confirmation.

Calculation

FOC Timeliness Interval = (a - b)

- a = Date and Time Firm Order Confirmation (FOC) for SI with LSR returned to CLEC
- b = Date and Time SI with LSR received

Average Interval = (c / d)

- c = Sum of all FOC Timeliness Intervals
- d = Total number of SIs with LSRs received in the reporting period

Percent Within Interval = (e / f) X 100

- e = Total number of Service Inquiries with LSRs received by the CRSG to distribution of FOC by the Local Carrier Service Center (LCSC)
- f = Total number of Service Inquiries with LSRs received in the reporting period

Report Structure

- CLEC Aggregate
- CLEC Specific
- Geographic Scope
  - State
  - Region
- Intervals
  0 – <= 3 days
  >3 – <= 5 days
  0 – <= 5 days
  >5 – <= 7 days
  >7 – <= 10 days
  >10 – <= 15 days
  >15 days

[6] *See O-9 for FOC Timeliness*

- Average Interval measured in days

Data Retained

Relating to CLEC Experience	Relating to BellSouth Performance
• Report Month • Total Number of Requests • SI Intervals • State and Region	• Not Applicable

SQM Disaggregation - Analog/Benchmark

SQM Level of Disaggregation	SQM Analog/Benchmark
• xDSL (includes UNE unbundled ADSL, HDSL and UNE Unbundled Copper Loops) • Unbundled Interoffice Transport	• 95% Returned <= 5 Business days

SEEM Measure

SEEM Measure		
No	Tier I	
	Tier II	

SEEM Disaggregation - Analog/Benchmark

SEEM Disaggregation	SEEM Analog/Benchmark
• Not Applicable	• Not Applicable

O-11: Firm Order Confirmation and Reject Response Completeness

Definition

A response is expected from BellSouth for every Local Service Request transaction (version). More than one response or differing responses per transaction is not expected. Firm Order Confirmation and Reject Response Completeness is the corresponding number of Local Service Requests received to the combination of Firm Order Confirmation and Reject Responses.

Exclusions

- Service Requests canceled by the CLEC prior to FOC or Rejected/Clarified
- Non-Mechanized LSRs
- Scheduled OSS Maintenance

Business Rules

Mechanized – The number of FOCs or Auto Clarifications sent to the CLEC from LENS, EDI, TAG in response to electronically submitted LSRs (date and time stamp in LENS, EDI, TAG).

Partially Mechanized – The number of FOCs or Rejects sent to the CLEC from LENS, EDI, TAG in response to electronically submitted LSRs (date and time stamp in LENS, EDI, TAG), which fall out for manual handling by the LCSC personnel.

Total Mechanized – The number of the combination of Fully Mechanized and Partially Mechanized LSRs

Non-Mechanized – The number of FOCs or Rejects sent to the CLEC via FAX Server in response to manually submitted LSRs (date and time stamp in FAX Server).

Note: Manual (Non-Mechanized) LSRs have no version control by the very nature of the manual process, therefore, non-mechanized LSRs are not captured by this report.

For CLEC Results:

Firm Order Confirmation and Reject Response Completeness is determined in two dimensions:

Percent responses is determined by computing the number of Firm Order Confirmations and Rejects transmitted by BellSouth and dividing by the number of Local Service Requests (all versions) received in the reporting period.

Percent of multiple responses is determined by computing the number of Local Service Request unique versions receiving more than one Firm Order Confirmation, Reject or the combination of the two and dividing by the number of Local Service Requests (all versions) received in the reporting period.

Calculation

Single FOC/Reject Response Expected

Firm Order Confirmation / Reject Response Completeness = (a / b) X 100

- a = Total Number of Service Requests for which a Firm Order Confirmation or Reject is Sent
- b = Total Number of Service Requests Received in the Report Period

Multiple or Differing FOC / Reject Responses Not Expected

Response Completeness = [(a + b) / c] X 100

- a = Total Number of Firm Order Confirmations Per LSR Version
- b = Total Number of Reject Responses Per LSR Version
- c = Total Number of Service Requests (All Versions) Received in the Reporting Period

Report Structure

Fully Mechanized, Partially Mechanized, Total Mechanized, Non-Mechanized

- State and Region
- CLEC Specific
- CLEC Aggregate
- BellSouth Specific

Data Retained

Relating to CLEC Experience	Relating to BellSouth Performance
Report Month • Reject Interval • Total Number of LSRs • Total Number of Rejects	• Not Applicable

SQM Disaggregation - Analog/Benchmark

SQM Level of Disaggregation	SQM Analog/Benchmark
• Resale Residence • Resale Business • Resale Design • Resale PBX • Resale Centrex • Resale ISDN • LNP (Standalone) • INP (Standalone) • 2W Analog Loop Design • 2W Analog Loop Non - Design • 2W Analog Loop With INP Design • 2W Analog Loop With INP Non - Design • 2W Analog Loop With LNP Design • 2W Analog Loop With LNP Non - Design • UNE Loop and Port Combinations • Switch Ports • UNE Combination Other • UNE xDSL (ADSL, HDSL, UCL) • Line Sharing • UNE ISDN Loops • UNE Other Design • UNE Other Non - Design • Local Interoffice Transport • Local Interconnection Trunks	• 95% Returned

SEEM Measure

SEEM Measure		
Yes	Tier I	X
	Tier II	X

SEEM Disaggregation - Analog/Benchmark

SEEM Disaggregation	SEEM Analog/Benchmark
• Fully Mechanized	• 95% Returned

O-12: Speed of Answer in Ordering Center

Definition

Measures the average time a customer is in queue.

Exclusions

None

Business Rules

The clock starts when the appropriate option is selected (i.e., 1 for Resale Consumer, 2 for Resale Multiline, and 3 for UNE-LNP, etc.) and the call enters the queue for that particular group in the LCSC. The clock stops when a BellSouth service representative in the LCSC answers the call. The speed of answer is determined by measuring and accumulating the elapsed time from the entry of a CLEC call into the BellSouth automatic call distributor (ACD) until a service representative in BellSouth's Local Carrier Service Center (LCSC) answers the CLEC call.

Calculation

Speed of Answer in Ordering Center = (a / b)

- a = Total seconds in queue
- b = Total number of calls answered in the Reporting Period

Report Structure

Aggregate

- CLEC – Local Carrier Service Center
- BellSouth
  - Business Service Center
  - Residence Service Center

Note: Combination of Residence Service Center and Business Service Center data.

Data Retained

Relating to CLEC Experience	Relating to BellSouth Performance
• Mechanized tracking through LCSC Automatic Call Distributor	• Mechanized tracking through BellSouth Retail center support system.

SQM Disaggregation - Analog/Benchmark

SQM Level of Disaggregation	SQM Analog/Benchmark
Aggregate • CLEC – Local Carrier Service Center • BellSouth - Business Service Center - Residence Service Center	• Parity with Retail

SEEM Measure

SEEM Measure		
No	Tier I	
	Tier II	

SEEM Disaggregation - Analog/Benchmark

SEEM Disaggregation	SEEM Analog/Benchmark
• Not Applicable	• Not Applicable

O-13: LNP-Percent Rejected Service Requests

Definition

Percent Rejected Service Request is the percent of total Local Service Requests (LSRs) which are rejected due to error or omission. An LSR is considered valid when it is electronically submitted by the CLEC and passes LNP Gateway edit checks to insure the data received is correctly formatted and complete, i.e., fatal rejects are never accepted and, therefore, are not included.

Exclusions

- Service Requests canceled by the CLEC
- Scheduled OSS Maintenance

Business Rules

An LSR is considered "rejected" when it is submitted electronically but does not pass edit checks in the ordering systems (EDI, TAG, LNP Gateway, LAUTO) and is returned to the CLEC without manual intervention.

Fully Mechanized: There are two types of "Rejects" in the Fully Mechanized category:

A **Fatal Reject** occurs when a CLEC attempts to electronically submit an LSR (via EDI or TAG) but required fields are not populated correctly and the request is returned to the CLEC.

Fatal rejects are reported in a separate column, and for informational purposes ONLY. They are not considered in the calculation of the percent of total LSRs rejected or the total number of rejected LSRs.

An **Auto Clarification** is a valid LSR which is electronically submitted (via EDI or TAG), but is rejected from LAUTO because it does not pass further edit checks for order accuracy. Auto Clarifications are returned without manual intervention.

Partially Mechanized: A valid LSR which is electronically submitted (via EDI or TAG), but cannot be processed electronically due to a CLEC error and "falls out" for manual handling. It is then put into "clarification", and sent back (rejected) to the CLEC.

Total Mechanized: Combination of Fully Mechanized and Partially Mechanized rejects.

Non-Mechanized: A valid LSR which is faxed or mailed to the BellSouth LCSC.

Calculation

LNP-Percent Rejected Service Requests = (a / b) X 100

- a = Number of Service Requests Rejected in the Reporting Period
- b = Number of Service Requests Received in the Reporting Period

Report Structure

- Fully Mechanized, Partially Mechanized, Total Mechanized, Non-Mechanized
- CLEC Specific
- CLEC Aggregate

Data Retained

Relating to CLEC Experience	Relating to BellSouth Performance
• Not Applicable	• Not Applicable

SQM Disaggregation - Analog/Benchmark

SQM Level of Disaggregation	SQM Analog/Benchmark
• LNP • UNE Loop With LNP	• Diagnostic

SEEM Measure

SEEM Measure		
No	Tier I	
	Tier II	

SEEM Disaggregation - Analog/Benchmark

SEEM Disaggregation	SEEM Analog/Benchmark
• Not Applicable	• Not Applicable

O-14: LNP-Reject Interval Distribution & Average Reject Interval

Definition

Reject Interval is the average reject time from receipt of an LSR to the distribution of a Reject. An LSR is considered valid when it is electronically submitted by the CLEC and passes LNP Gateway edit checks to insure the data received is correctly formatted and complete.

Exclusions

- Service Requests canceled by the CLEC
- Designated Holidays are excluded from the interval calculation
- LSRs which are identified and classified as "Projects"
- The following hours for Partially mechanized and Non-mechanized LSRs are excluded from the interval calculation:

  Residence Resale Group – Monday through Saturday 7:00PM until 7:00AM
  From 7:00 PM Saturday until 7:00 AM Monday

  Business Resale, Complex, UNE Groups – Monday through Friday 6:00PM until 8:00AM
  From 6:00 PM Friday until 8:00 AM Monday.

  The hours excluded will be altered to reflect changes in the Center operating hours. The LCSC will accept faxed LSRs only during posted hours of operation.

  The interval will be the amount of time accrued from receipt of the LSR until normal closing of the center if an LSR is worked using overtime hours.

  In the case of a Partially Mechanized LSR received and worked after normal business hours, the interval will be set at one (1) minute.

- Scheduled OSS Maintenance

Business Rules

The Reject interval is determined for each rejected LSR processed during the reporting period. The Reject interval is the elapsed time from when BellSouth receives LSR until that LSR is rejected back to the CLEC. Elapsed time for each LSR is accumulated for each reporting dimension. The accumulated time for each reporting dimension is then divided by the associated total number of rejected LSRs to produce the reject interval distribution.

An LSR is considered "rejected" when it is submitted electronically but does not pass edit checks in the ordering systems (EDI, TAG, LNP Gateway, LAUTO) and is returned to the CLEC without manual intervention.

Fully Mechanized: There are two types of "Rejects" in the Fully Mechanized category:

A **Fatal Reject** occurs when a CLEC attempts to electronically submit an LSR but required fields are not populated correctly and the request is returned to the CLEC.

An **Auto Clarification** is a valid LSR which is electronically submitted (via EDI or TAG), but is rejected from LAUTO because it does not pass further edit checks for order accuracy. Auto Clarifications are returned without manual intervention.

Partially Mechanized: A valid LSR which electronically submitted (via EDI or TAG), but cannot be processed electronically due to a CLEC error and "falls out" for manual handling. It is then put into "clarification", and sent back to the CLEC.

Total Mechanized: Combination of Fully Mechanized and Partially Mechanized rejects.

Non-Mechanized: A valid LSR which is faxed or mailed to the BellSouth LCSC.

Calculation

Reject Interval = (a - b)

- a = Date & Time of Service Request Rejection
- b = Date & Time of Service Request Receipt

Average Reject Interval = (c / d)

- c = Sum of all Reject Intervals
- d = Total Number of Service Requests Rejected in Reporting Period

Reject Interval Distribution = (e / f) X 100

- e = Service Requests Rejected in reported interval
- f = Total Number of Service Requests Rejected in Reporting Period

Report Structure

Fully Mechanized, Partially Mechanized, Total Mechanized, Non-Mechanized

- CLEC Specific
- CLEC Aggregate
- State, Region
- Fully Mechanized:
  0 - <= 4 minutes
  >4 - <= 8 minutes
  >8 - <= 12 minutes
  >12 - <= 60 minutes
  0 - <= 1 hour
  >1 - <= 4 hours
  >4 - <= 8 hours
  >8 - <= 12 hours
  >12 - <= 16 hours
  >16 - <= 20 hours
  >20 - <= 24 hours
  > 24 hours
- Partially Mechanized:
  0 - <= 1 hour
  >1 - <= 4 hours
  >4 - <= 8 hours
  >8 - <= 10 hours
  0 - <= 10 hours
  >10 - <= 18 hours
  0 - <= 18 hours
  >18 - <= 24 hours
  > 24 hours
- Non-Mechanized:
  0 - <= 1 hour
  >1 - <= 4 hours
  >4 - <= 8 hours
  >8 - <= 12 hours
  >12 - <= 16 hours
  >16 - <= 20 hours
  >20 - <= 24 hours
  0 - <= 24 hours
  >24 hours
- Average Interval in Days or Hours

Data Retained

Relating to CLEC Experience	Relating to BellSouth Performance
• Report Month • Reject Interval • Total Number of LSRs • Total number of Rejects • State and Region	• Not Applicable

SQM Disaggregation - Analog/Benchmark

SQM Level of Disaggregation	SQM Analog/Benchmark
• LNP • UNE Loop with LNP	• Mechanized: 97% <= I Hour • Partially Mechanized: 85% <= 24 Hours • Partially Mechanized: 85% <= 18 Hours (05/01/01) • Partially Mechanized: 85% <= 10 Hours (08/01/01) • Non-Mechanized: 85% <= 24 Hours

SEEM Measure

SEEM Measure		
No	Tier I	
	Tier II	

SEEM Disaggregation - Analog/Benchmark

SEEM Disaggregation	SEEM Analog/Benchmark
• Not Applicable	• Not Applicable

O-15: LNP-Firm Order Confirmation Timeliness Interval Distribution & Firm Order Confirmation Average Interval

Definition

Interval for Return of a Firm Order Confirmation (FOC Interval) is the average response time from receipt of a valid LSR to distribution of a firm order confirmation.

Exclusions

- Rejected LSRs
- Designated Holidays are excluded from the interval calculation
- LSRs which are identified and classified as “Projects”
- The following hours for Partially Mechanized and Non-mechanized LSRs are excluded from the interval calculation:

  Residence Resale Group – Monday through Saturday 7:00PM until 7:00AM

  From 7:00 PM Saturday until 7:00 AM Monday.

  Business Resale, Complex, UNE Groups – Monday through Friday 6:00PM until 8:00AM

  From 6:00 PM Friday until 8:00 AM Monday.

  The hours excluded will be altered to reflect changes in the Center operating hours. The LCSC will accept faxed LSRs only during posted hours of operation.

  The interval will be the amount of time accrued from receipt of the LSR until normal closing of the center if an LSR is worked using overtime hours.

  In the case of a Partially Mechanized LSR received and worked after normal business hours, the interval will be set at one (1) minute.

- Scheduled OSS Maintenance

Business Rules

- **Fully Mechanized:** The elapsed time from receipt of a valid electronically submitted LSR (date and time stamp in EDI, LENS or TAG) until the LSR is processed, appropriate service orders are generated and a Firm Order Confirmation is returned to the CLEC via EDI, LENS or TAG.
- **Partially Mechanized:** The elapsed time from receipt of a valid electronically submitted LSR (date and time stamp in EDI, LENS, or TAG) which falls out for manual handling until appropriate service orders are issued by a BellSouth service representative via Direct Order Entry (DOE) or Service Order Negotiation Generation System (SONGS) to SOCS and a Firm Order Confirmation is returned to the CLEC via EDI, LENS, or TAG.
- **Total Mechanized:** Combination of Fully Mechanized and Partially Mechanized LSRs which are electronically submitted by the CLEC.
- **Non-Mechanized:** The elapsed time from receipt of a valid paper LSR (date and time stamp of FAX or date and time paper LSRs received in LCSC) until appropriate service orders are issued by a BellSouth service representative via Direct Order Entry (DOE) or Service Order Negotiation Generation System (SONGS) to SOCS and a Firm Order Confirmation is sent to the CLEC via LON.

Calculation

Firm Order Confirmation Interval = (a - b)

- a = Date & Time of Firm Order Confirmation
- b = Date & Time of Service Request Receipt)

Average FOC Interval = (c / d)

- c = Sum of all FOC Intervals
- d = Total Number of Service Requests Confirmed in Reporting Period

FOC Interval Distribution (for each interval) = (e / f) X 100

- e = Service Requests Confirmed in interval
- f = Total Service Requests Confirmed in the Reporting Period

Report Structure

Fully Mechanized, Partially Mechanized, Total Mechanized, Non-Mechanized

- CLEC Specific
- CLEC Aggregate
- State and Region
- Fully Mechanized:
  0 - <= 15 minutes
  >15 - <= 30 minutes
  >30 - <= 45 minutes
  >45 - <= 60 minutes
  >60 - <= 90 minutes
  >90 - <= 120 minutes
  >120 - <= 180 minutes
  0 - <= 3 hours
  >3 - <= 6 hours
  >6 - <= 12 hours
  >12 - <= 24 hours
  >24 - <= 48 hours
  >48 hours
- Partially Mechanized:
  0 - <= 4 hours
  >4 - <= 8 hours
  >8 - <= 10 hours
  0 - <= 10 hours
  >10 - <= 18 hours
  0 - <= 18 hours
  >18 - <= 24 hours
  0 - <= 24 hours
  >24 - <= 48 hours
  > 48 hours
- Non-Mechanized:
  0 - <= 4 hours
  >4 - <= 8 hours
  >8 - <= 12 hours
  >12 - <= 16 hours
  >16 - <= 20 hours
  >20 - <= 24 hours
  >24 - <= 36 hours
  0 - <= 36 hours
  >36 - <= 48 hours
  >48 hours

Data Retained

Relating to CLEC Experience	Relating to BellSouth Performance
Report Month • Total Number of LSRs • Total Number of FOCs • State and Region	• Not Applicable

SQM Disaggregation - Analog/Benchmark

SQM Level of Disaggregation	SQM Analog/Benchmark
• LNP • UNE Loop with LNP	• Mechanized: 95% <= 3 Hours • Partially Mechanized: 85% <= 24 Hours • Partially Mechanized: 85% <= 18 Hours (05/01/01) • Partially Mechanized: 85% <= 10 Hours (08/01/01) • Non-Mechanized: 85% <= 36 hours

SEEM Measure

SEEM Measure		
No	Tier I	
	Tier II	

SEEM Disaggregation - Analog/Benchmark

SEEM Disaggregation	SEEM Analog/Benchmark
• Not Applicable	• Not Applicable

Section 3: Provisioning

P-1: Mean Held Order Interval & Distribution Intervals

Definition

When delays occur in completing CLEC orders, the average period that CLEC orders are held for BellSouth reasons, pending a delayed completion, should be no worse for the CLEC when compared to BellSouth delayed orders. Calculation of the interval is the total days orders are held and pending but not completed that have passed the currently committed due date; divided by the total number of held orders. This report is based on orders still pending, held and past their committed due date at the close of the reporting period. The distribution interval is based on the number of orders held and pending but not completed over 15 and 90 days. (Orders reported in the >90 day interval are also included in the >15 day interval.)

Exclusions

- Order Activities of BellSouth or the CLEC associated with internal or administrative use of local services (Record Orders, Listing Orders, Test Orders, etc.)
- Disconnect (D) & From (F) orders
- Orders with appointment code of 'A' for Rural orders

Business Rules

Mean Held Order Interval: This metric is computed at the close of each report period. The held order interval is established by first identifying all orders, at the close of the reporting interval, that both have not been reported as completed in SOCS and have passed the currently committed due date for the order. For each such order, the number of calendar days between the earliest committed due date on which BellSouth had a company missed appointment and the close of the reporting period is established and represents the held order interval for that particular order. The held order interval is accumulated by the standard groupings, unless otherwise noted, and the reason for the order being held. The total number of days accumulated in a category is then divided by the number of held orders within the same category to produce the mean held order interval. The interval is by calendar days with no exclusions for Holidays or Sundays.

CLEC Specific reporting is by type of held order (facilities, equipment, other), total number of orders held, and the total and average days.

Held Order Distribution Interval: This measure provides data to report total days held and identifies these in categories of >15 days and > 90 days. (Orders counted in >90 days are also included in > 15 days).

Calculation

Mean Held Order Interval = a / b

- a = Sum of held-over-days for all Past Due Orders Held for the reporting period
- b = Number of Past Due Orders Held and Pending But Not Completed and past the committed due date

Held Order Distribution Interval (for each interval) = (c / d) X 100

- c = # of Orders Held for >= 15 days or # of Orders Held for >= 90 days
- d = Total # of Past Due Orders Held and Pending But Not Completed)

Report Structure

- CLEC Specific
- CLEC Aggregate
- BellSouth Aggregate
- Circuit Breakout < 10, >= 10 (except trunks)

Data Retained

Relating to CLEC Experience	Relating to BellSouth Performance
• Report Month • CLEC Order Number and PON (PON) • Order Submission Date (TICKET_ID) • Committed Due Date (DD) • Service Type (CLASS_SVC_DESC) • Hold Reason • Total Line/circuit Count • Geographic Scope **Note**: Code in parentheses is the corresponding header found in the raw data file.	• Report Month • BellSouth Order Number • Order Submission Date • Committed Due Date • Service Type • Hold Reason • Total Line/circuit Count • Geographic Scope

SQM Disaggregation - Analog/Benchmark

SQM Level of Disaggregation	SQM Analog/Benchmark
• Resale Residence	• Retail Residence
• Resale Business	• Retail Business
• Resale Design	• Retail Design
• Resale PBX	• Retail PBX
• Resale Centrex	• Retail Centrex
• Resale ISDN	• Retail ISDN
• LNP (Standalone)	• Retail Residence and Business (POTS)
• INP (Standalone)	• Retail Residence and Business (POTS)
• 2W Analog Loop Design	• Retail Residence and Business Dispatch
• 2W Analog Loop Non-Design	• Retail Residence and Business - POTS Excluding Switch-Based Orders
• 2W Analog Loop With LNP Design	• Retail Residence and Business Dispatch
• 2W Analog Loop With LNP Non-Design	• Retail Residence and Business - POTS Excluding Switch-Based Orders
• 2W Analog Loop With INP-Design	• Retail Residence and Business Dispatch
• 2W Analog Loop With INP Non-Design	• Retail Residence and Business - POTS Excluding Switch-Based Orders
• UNE Digital Loop < DS1	• Retail Digital Loop < DS1
• UNE Digital Loop >= DS1	• Retail Digital Loop >= DS1
• UNE Loop + Port Combinations	• Retail Residence and Business
• UNE Switch Ports	• Retail Residence and Business (POTS)
• UNE Combo Other	• Retail Residence, Business and Design Dispatch
• UNE xDSL (HDSL, ADSL and UCL)	• ADSL Provided to Retail
• UNE ISDN	• Retail ISDN - BRI
• UNE Line Sharing	• ADSL Provided to Retail
• UNE Other Design	• Retail Design
• UNE Other Non-Design	• Retail Residence and Business
• Local Transport (Unbundled Interoffice Transport)	• Retail DS1/DS3 Interoffice
• Local Interconnection Trunks	• Parity with Retail

SEEM Measure

SEEM Measure		
No	Tier I	
	Tier II	

SEEM Disaggregation - Analog/Benchmark

SEEM Disaggregation	SEEM Analog/Benchmark
• Not Applicable	• Not Applicable

P-2: Average Jeopardy Notice Interval & Percentage of Orders Given Jeopardy Notices

Definition

When BellSouth can determine in advance that a committed due date is in jeopardy for facility delay, it will provide advance notice to the CLEC.

The interval is from the date/time the notice is released to the CLEC/BellSouth systems until 5pm on the commitment date of the order. The Percent of Orders is the percentage of orders given jeopardy notices for facility delay in the count of orders confirmed in the report period.

Exclusions

- Orders held for CLEC end user reasons
- Disconnect (D) & From (F) orders
- Non-Dispatch Orders

Business Rules

When BellSouth can determine in advance that a committed due date is in jeopardy for facility delay, it will provide advance notice to the CLEC. The number of committed orders in a report period is the number of orders that have a due date in the reporting period. Jeopardy notices for interconnection trunks results are usually zero as these trunks seldom experience facility delays. The Committed due date is considered the Confirmed due date. This report measures dispatched orders only. If an order is originally sent as non-dispatch and it is determined there is a facility delay, the order is converted to a dispatch code so the facility problem can be corrected. It will remain coded dispatched until completion.

Calculation

Jeopardy Interval = a - b

- a = Date and Time of Jeopardy Notice
- b = Date and Time of Scheduled Due Date on Service Order

Average Jeopardy Interval = c / d

- c = Sum of all jeopardy intervals
- d = Number of Orders Notified of Jeopardy in Reporting Period

Percent of Orders Given Jeopardy Notice = (e / f) X 100

- e = Number of Orders Given Jeopardy Notices in Reporting Period
- f = Number of Orders Confirmed (due) in Reporting Period)

Report Structure

- CLEC Specific
- CLEC Aggregate
- BellSouth Aggregate
- Dispatch Orders
- Mechanized Orders
- Non-Mechanized Orders

Data Retained

Relating to CLEC Experience	Relating to BellSouth Performance
• Report Month • CLEC Order Number and PON • Date and Time Jeopardy Notice Sent • Committed Due Date • Service Type **Note:** Code in parentheses is the corresponding header found in the raw data file.	• Report Month • BellSouth Order Number • Date and Time Jeopardy Notice Sent • Committed Due Date • Service Type

SQM Disaggregation - Analog/Benchmark

SQM Level of Disaggregation	SQM Analog/Benchmark
% Orders Given Jeopardy Notice	
• Resale Residence	• Retail Residence
• Resale Business	• Retail Business
• Resale Design	• Retail Design
• Resale PBX	• Retail PBX
• Resale Centrex	• Retail Centrex
• Resale ISDN	• Retail ISDN
• LNP (Standalone)	• Retail Residence and Business (POTS)
• INP (Standalone)	• Retail Residence and Business (POTS)
• 2W Analog Loop Design	• Retail Residence and Business Dispatch
• 2W Analog Loop Non-Design	• Retail Residence and Business - (POTS Excluding Switch- Based Orders)
• 2W Analog Loop With LNP Design	• Retail Residence and Business Dispatch
• 2W Analog Loop With LNP Non-Design	• Retail Residence and Business - (POTS Excluding Switch- Based Orders)
• 2W Analog Loop With INP Design	• Retail Residence and Business Dispatch
• 2W Analog Loop With INP Non-Design	• Retail Residence and Business (POTS Excluding Switch-Based Orders)
•UNE Digital Loop < DS1	• Retail Digital Loop < DS1
•UNE Digital Loop >= DS1	• Retail Digital Loop >= DS1
•UNE Loop + Port Combinations	• Retail Business and Residence
•UNE Switch Ports	• Retail Residence and Business (POTS)
•UNE Combo Other	• Retail Residence, Business and Design Dispatch
•UNE xDSL (HDSL, ADSL and UCL)	• ADSL Provided to Retail
•UNE ISDN	• Retail ISDN BRI
•UNE Line Sharing	• ADSL Provided to Retail
•UNE Other Design	• Retail Design
•UNE Other Non -Design	• Retail Residence and Business
•Local Transport (Unbundled Interoffice Transport)	• Retail DS1/DS3 Interoffice
•Local Interconnection Trunks	• Parity with Retail
•Average Jeopardy Notice Interval	• 95% >= 48 Hours

SEEM Measure

SEEM Measure		
No	Tier I	
	Tier II	

SEEM Disaggregation - Analog/Benchmark

SEEM Disaggregation	SEEM Analog/Benchmark
• Not Applicable	• Not Applicable

P-3: Percent Missed Installation Appointments

Definition

"Percent missed installation appointments" monitors the reliability of BellSouth commitments with respect to committed due dates to assure that the CLEC can reliably quote expected due dates to their retail customer as compared to BellSouth. This measure is the percentage of total orders processed for which BellSouth is unable to complete the service orders on the committed due dates and reported for Total misses and End User Misses.

Exclusions

- Canceled Service Orders
- Order Activities of BellSouth or the CLEC associated with internal or administrative use of local services (Record Orders, Listing Orders Test Orders, etc.)
- Disconnect (D) & From (F) orders
- End User Misses on Local Interconnection Trunks

Business Rules

Percent Missed Installation Appointments (PMI) is the percentage of orders with completion dates in the reporting period that are past the original committed due date. Missed Appointments caused by end-user reasons will be included and reported separately. The first commitment date on the service order that is a missed appointment is the missed appointment code used for calculation whether it is a BellSouth missed appointment or an End User missed appointment. The "due date" is any time on the confirmed due date. Which means there cannot be a cutoff time for commitments, as certain types of orders are requested to be worked after standard business hours. Also, during Daylight Savings Time, field technicians are scheduled until 9PM in some areas and the customer is offered a greater range of intervals from which to select.

Calculation

Percent Missed Installation Appointments = (a / b) X 100

- a = Number of Orders with Completion date in Reporting Period past the Original Committed Due Date
- b = Number of Orders Completed in Reporting Period

Report Structure

- CLEC Specific
- CLEC Aggregate
- BellSouth Aggregate
- Report in Categories of <10 lines/circuits >= 10 lines/circuits (except trunks)
- Dispatch/No Dispatch

Report Explanation: The difference between End User MA and Total MA is the result of BellSouth caused misses. Here, Total MA is the total percent of orders missed either by BellSouth or CLEC end user. The End User MA represents the percentage of orders missed by the CLEC or their end user.

Data Retained

Relating to CLEC Experience	Relating to BellSouth Performance
• Report Month • CLEC Order Number and PON (PON) • Committed Due Date (DD) • Completion Date (CMPLTN DD) • Status Type • Status Notice Date • Standard Order Activity • Geographic Scope **Note:** Code in parentheses is the corresponding header found in the raw data file.	• Report Month • BellSouth Order Number • Committed Due Date (DD) • Completion Date (CMPLTN DD) • Status Type • Status Notice Date • Standard Order Activity • Geographic Scope

SQM Disaggregation - Analog/Benchmark

SQM LEVEL of Disaggregation	SQM Analog/Benchmark
• Resale Residence	• Retail Residence
• Resale Business	• Retail Business
• Resale Design	• Retail Design
• Resale PBX	• Retail PBX
• Resale Centrex	• Retail Centrex
• Resale ISDN	• Retail ISDN
• LNP (Standalone)	• Retail Residence and Business (POTS)
• INP (Standalone)	• Retail Residence and Business (POTS)
• 2W Analog Loop Design	• Retail Residence and Business Dispatch
• 2W Analog Loop Non-Design - Dispatch - Non-Dispatch (Dispatch In)	• Retail Residence and Business - (POTS Excluding Switch-Based Orders) - Dispatch - Non-Dispatch (Dispatch In)
• 2W Analog Loop With LNP Design	• Retail Residence and Business Dispatch
• 2W Analog Loop With LNP Non-Design - Dispatch - Non-Dispatch (Dispatch In)	• Retail Residence and Business - (POTS Excluding Switch-Based Orders) - Dispatch - Non-Dispatch (Dispatch In)
• 2W Analog Loop With INP Design	• Retail Residence and Business Dispatch
• 2W Analog Loop With INP Non-Design - Dispatch - Non-Dispatch (Dispatch In)	• Retail Residence and Business (POTS Excluding Switch-Based Orders) - Dispatch - Non-Dispatch (Dispatch In)
• UNE Digital Loop < DS1	• Retail Digital Loop < DS1
• UNE Digital Loop >= DS1	• Retail Digital Loop >= DS1
• UNE Loop + Port Combinations - Dispatch Out - Non-Dispatch - Dispatch In - Switch-Based	• Retail Residence and Business - Dispatch Out - Non-Dispatch - Dispatch In - Switch-Based
• UNE Switch Ports	• Retail Residence and Business (POTS)
• UNE Combo Other - Dispatch - Non-Dispatch (Dispatch In)	• Retail Residence, Business and Design Dispatch (Including Dispatch Out and Dispatch In) - Dispatch - Non-Dispatch (Dispatch In)
• UNE xDSL (HDSL, ADSL and UCL)	• ADSL Provided to Retail
• UNE ISDN	• Retail ISDN - BRI
• UNE Line Sharing	• ADSL Provided to Retail
• UNE Other Design	• Retail Design
• UNE Other Non - Design	• Retail Residence and Business
• Local Transport (Unbundled Interoffice Transport)	• Retail DS1/DS3 Interoffice
• Local Interconnection Trunks	• Parity with Retail

SEEM Measure

SEEM Measure		
Yes	Tier I	X
	Tier II	X

SEEM Disaggregation - Analog/Benchmark

SEEM Disaggregation	SEEM Analog/Benchmark
• Resale POTS	• Retail Residence and Business (POTS)
• Resale Design	• Retail Design
• UNE Loop + Port Combinations	• Retail Residence and Business
• UNE Loops	• Retail Residence and Business Dispatch
• UNE xDSL	• ADSL Provided to Retail
• UNE Line Sharing	• ADSL Provided to Retail
• Local Interconnection Trunks	• Parity with Retail

P-4: Average Completion Interval (OCI) & Order Completion Interval Distribution

Definition

The "average completion interval" measure monitors the interval of time it takes BellSouth to provide service for the CLEC or its own customers. The "Order Completion Interval Distribution" provides the percentages of orders completed within certain time periods. This report measures how well BellSouth meets the interval offered to customers on service orders.

Exclusions

- Canceled Service Orders
- Order Activities of BellSouth or the CLEC associated with internal or administrative use of local services (Record Orders, Listing Orders, Test Orders, etc.)
- Disconnect (D&F) orders (Except "D" orders associated with LNP Standalone)
- "L" Appointment coded orders (where the customer has requested a later than offered interval)

Business Rules

The actual completion interval is determined for each order processed during the reporting period. The completion interval is the elapsed time from when BellSouth issues a FOC or SOCS date time stamp receipt of an order from the CLEC to BellSouth's actual order completion date. This includes all delays for BellSouth's CLEC/End Users. The clock starts when a valid order number is assigned by SOCS and stops when the technician or system completes the order in SOCS. Elapsed time for each order is accumulated for each reporting dimension. The accumulated time for each reporting dimension is then divided by the associated total number of orders completed. Orders that are worked on zero due dates are calculated with a .33-day interval (8 hours) in order to report a portion of a day interval. These orders are issued and worked/completed on the same day. They can be either flow through orders (no field work-non-dispatched) or field orders (dispatched).

The interval breakout for UNE and Design is: 0-5 = 0-4.99, 5-10 = 5-9.99, 10-15 = 10-14.99, 15-20 = 15- 19.99, 20-25 = 20-24.99, 25-30 = 25-29.99, >= 30 = 30 and greater.

Calculation

Completion Interval = (a - b)

- a = Completion Date
- b = Order Issue Date

Average Completion Interval = (c / d)

- c = Sum of all Completion Intervals
- d = Count of Orders Completed in Reporting Period

Order Completion Interval Distribution (for each interval) = (e / f) X 100

- e = Service Orders Completed in "X" days
- f = Total Service Orders Completed in Reporting Period

Report Structure

- CLEC Specific
- CLEC Aggregate
- BellSouth Aggregate
- Dispatch / No Dispatch categories applicable to all levels except trunks
- Residence & Business reported in day intervals = 0, 1, 2, 3, 4, 5, 5+
- UNE and Design reported in day intervals = 0-5, 5-10, 10-15, 15-20, 20-25, 25-30,>= 30
- All Levels are reported <10 line/circuits; >= 10 line/circuits (except trunks)
- ISDN Orders included in Non-Design

Data Retained

Relating to CLEC Experience	Relating to BellSouth Performance
• Report Month • CLEC Company Name • Order Number (PON)	• Report Month • BellSouth Order Number

• Application Date & Time (TICKET_ID) • Completion Date (CMPLTN_DT) • Service Type (CLASS_SVC_DESC) • Geographic Scope **Note:** Code in parentheses is the corresponding header found in the raw data file.	• Application Date & Time • Order Completion Date & Time • Service Type • Geographic Scope

SQM Disaggregation - Analog/Benchmark

SQM Level of Disaggregation	SQM Analog/Benchmark
• Resale Residence	• Retail Residence
• Resale Business	• Retail Business
• Resale Design	• Retail Design
• Resale PBX	• Retail PBX
• Resale Centrex	• Retail Centrex
• Resale ISDN	• Retail ISDN
• LNP (Standalone)	• Retail Residence and Business (POTS)
• INP (Standalone)	• Retail Residence and Business (POTS)
• 2W Analog Loop Design	• Retail Residence and Business Dispatch
• 2W Analog Loop Non-Design - Dispatch - Non-Dispatch (Dispatch In)	• Retail Residence and Business - (POTS Excluding Switch-Based Orders) - Dispatch - Non-Dispatch (Dispatch In)
• 2W Analog Loop With LNP Design	• Retail Residence and Business Dispatch
• 2W Analog Loop With LNP Non-Design - Dispatch - Non-Dispatch (Dispatch In)	• Retail Residence and Business - (POTS Excluding Switch-Based Orders) - Dispatch - Non-Dispatch (Dispatch In)
• 2W Analog Loop With INP Design	• Retail Residence and Business Dispatch
• 2W Analog Loop With INP Non-Design - Dispatch - Non-Dispatch (Dispatch In)	• Retail Residence and Business - (POTS Excluding Switch-Based Orders) - Dispatch - Non-Dispatch (Dispatch In)
• UNE Digital Loop < DS1	• Retail Digital Loop < DS1
• UNE Digital Loop >= DS1	• Retail Digital Loop >= DS1
• UNE Loop + Port Combinations - Dispatch Out - Non-Dispatch - Dispatch In - Switch-Based	• Retail Residence and Business - Dispatch Out - Non-Dispatch - Dispatch In - Switch-Based
• UNE Switch Ports	• Retail Residence and Business (POTS)
• UNE Combo Other - Dispatch - Non-Dispatch (Dispatch In)	• Retail Residence, Business and Design Dispatch (Including Dispatch Out and Dispatch In) - Dispatch - Non-Dispatch (Dispatch In)
• UNE xDSL (HDSL, ADSL and UCL) without conditioning	• 7 Days
• UNE xDSL (HDSL, ADSL and UCL) with conditioning	• 14 Days
• UNE ISDN	• Retail ISDN BRI
• UNE Line Sharing	• ADSL Provided to Retail
• UNE Other Design	• Retail Design
• UNE Other Non-Design	• Retail Residence and Business
• Local Transport (Unbundled Interoffice Transport)	• Retail DS1/DS3 Interoffice
• Local Interconnection Trunks	• Parity with Retail

SEEM Measure

SEEM Measure		
Yes	Tier I	X
	Tier II	X

SEEM Disaggregation - Analog/Benchmark

SEEM Disaggregation	SEEM Analog/Benchmark
• Resale POTS	• Retail Residence and Business (POTS)
• Resale Design	• Retail Design
• UNE Loop + Port Combinations	• Retail Residence and Business
• UNE Loops	• Retail Residence and Business Dispatch
• UNE xDSL without conditioning	• 7 Days
• UNE xDSL with conditioning	• 14 Days
• UNE Line Sharing	• ADSL Provided to Retail
• Local Interconnection Trunks	• Parity with Retail

P-5: Average Completion Notice Interval

Definitions

The Completion Notice Interval is the elapsed time between the BellSouth reported completion of work and the issuance of a valid completion notice to the CLEC.

Exclusions

- Cancelled Service Orders
- Order Activities of BellSouth or the CLEC associated with internal or administrative use of local services (Record Orders, Listing Orders, Test Orders, etc.)
- D&F orders (Exception: “D” orders associated with LNP Standalone)

Business Rules

Measurement on interval of completion date and time entered by a field technician on dispatched orders, and 5PM start time on the due date for non-dispatched orders; to the release of a notice to the CLEC/BellSouth of the completion status. The field technician notifies the CLEC the work was complete and then he/she enters the completion time stamp information in his/her computer. This information switches through to the SOCS systems either completing the order or rejecting the order to the Work Management Center (WMC). If the completion is rejected, it is manually corrected and then completed by the WMC. The notice is returned on each individual order.

The start time for all orders is the completion stamp either by the field technician or the 5PM due date stamp; the end time for mechanized orders is the time stamp the notice was transmitted to the CLEC interface (LENS, EDI, OR TAG). For non-mechanized orders the end timestamp will be timestamp of order update to C-SOTS system.

Calculation

Completion Notice Interval = (a - b)

- a = Date and Time of Notice of Completion
- b = Date and Time of Work Completion

Average Completion Notice Interval = c / d

- c = Sum of all Completion Notice Intervals
- d = Number of Orders with Notice of Completion in Reporting Period

Report Structure

- CLEC Specific
- CLEC Aggregate
- BellSouth Aggregate
- Mechanized Orders
- Non-Mechanized Orders
- Reporting intervals in Hours; 0, 1-2, 2-4, 4-8, 8-12, 12-24, >= 24 plus Overall Average Hour Interval (The categories are inclusive of these time intervals: 0-1 = 0.99; 1-2 =1-1.99; 2-4 = 2-3.99, etc.)
- Reported in categories of <10 line/circuits; >= 10 line/circuits (except trunks)

Data Retained

Relating to CLEC Experience	Relating to BellSouth Performance
• Report Month • CLEC Order Number (so_nbr) • Work Completion Date (cmpltn_dt) • Work Completion Time • Completion Notice Availability Date • Completion Notice Availability Time • Service Type • Geographic Scope **Note:** Code in parentheses is the corresponding header found	• Report Month • BellSouth Order Number (so_nbr) • Work Completion Date (cmpltn_dt) • Work Completion Time • Completion Notice Availability Date • Completion Notice Availability Time • Service Type • Geographic Scope **NOTE:** Code in parentheses is the corresponding header

in the raw data file.	found in the raw data file.

SQM Disaggregation - Analog/Benchmark

SQM Level of Disaggregation	SQM Analog/Benchmark
• Resale Residence	• Retail Residence
• Resale Business	• Retail Business
• Resale Design	• Retail Design
• Resale PBX	• Retail PBX
• Resale Centrex	• Retail Centrex
• Resale ISDN	• Retail ISDN
• LNP (Standalone)	• Retail Residence and Business (POTS)
• INP (Standalone)	• Retail Residence and Business (POTS)
• 2W Analog Loop Design	• Retail Residence and Business Dispatch
• 2W Analog Loop Non-Design - Dispatch - Non-Dispatch (Dispatch In)	• Retail Residence and Business - (POTS Excluding Switch-Based Orders) - Dispatch - Non-Dispatch (Dispatch In)
• 2W Analog Loop With LNP Design	• Retail Residence and Business Dispatch
• 2W Analog Loop With LNP Non-Design - Dispatch - Non-Dispatch (Dispatch In)	• Retail Residence and Business - (POTS Excluding Switch-Based Orders) - Dispatch - Non-Dispatch (Dispatch In)
• 2W Analog Loop With INP Design	• Retail Residence and Business Dispatch
• 2W Analog Loop With INP Non-Design - Dispatch - Non-Dispatch (Dispatch In)	• Retail Residence and Business (POTS Excluding Switch-Based Orders) - Dispatch - Non-Dispatch (Dispatch In)
• UNE Digital Loop < DS1	• Retail Digital Loop < DS1
• UNE Digital Loop >= DS1	• Retail Digital Loop >= DS1
• UNE Loop + Port Combinations - Dispatch Out - Non-Dispatch - Dispatch In - Switch-Based	• Retail Residence and Business - Dispatch Out - Non-Dispatch - Dispatch In - Switch-Based
• UNE Switch Ports	• Retail Residence and Business (POTS)
• UNE Combo Other - Dispatch - Non-Dispatch (Dispatch In)	• Retail Residence, Business and Design Dispatch (Including Dispatch Out and Dispatch In) - Dispatch - Non-Dispatch (Dispatch In)
• UNE xDSL (HDSL, ADSL and UCL)	• ADSL Provided to Retail
• UNE ISDN	• Retail ISDN BRI
• UNE Line Sharing	• ADSL Provided to Retail
• UNE Other Design	• Retail Design
• UNE Other Non-Design	• Retail Residence and Business
• Local Transport (Unbundled Interoffice Transport)	• Retail DS1/DS3 Interoffice
• Local Interconnection Trunks	• Parity with Retail

SEEM Measure

SEEM Measure		
No	Tier I	
	Tier II	

SEEM Disaggregation - Analog/Benchmark

SEEM Disaggregation	SEEM Analog/Benchmark
• Not Applicable	• Not Applicable

P-6: % Completions/Attempts without Notice or < 24 hours Notice

Definition

This Report measures the interval from the FOC end timestamp on the LSR until 5:00 P.M. on the original committed due date of a service order. The purpose of this measure is to report if BellSouth is returning a FOC to the CLEC in time for the CLEC to notify their customer of the scheduled date.

Exclusions

"0" dated orders or any request where the subscriber requested an earlier due date of < 24 hours prior to the original commitment date, or any LSR received < 24 hours prior to the original commitment date.

Business Rules

For CLEC Results:

Calculation would exclude any successful or unsuccessful service delivery where the CLEC was informed at least 24 hours in advance. BellSouth may also exclude from calculation any LSRs received from the requesting CLEC with less than 24 hour notice prior to the commitment date.

For BellSouth Results:

BellSouth does not provide a FOC to its retail customers.

Calculation

Percent Completions or Attempts without Notice or with Less Than 24 Hours Notice = (a / b) X 100

- a = Completion Dispatches (Successful and Unsuccessful) With No FOC or FOC Received < 24 Hours of original Committed Due Date
- b = All Completions

Report Structure

- CLEC Specific
- CLEC Aggregate
- Dispatch /Non-Dispatch
- Total Orders FOC < 24 Hours
- Total Completed Service Orders
- % FOC < 24 Hours

Data Retained

Relating to CLEC Experience	Relating to BellSouth Performance
• Committed Due Date (DD) • FOC End Timestamp • Report Month • CLEC Order Number and PON • Geographic Scope - State / Region	• Not Applicable

SQM Disaggregation - Analog/Benchmark

SQM Level of Disaggregation	SQM Analog/Benchmark
• Resale Residence • Resale Business • Resale Design • Resale PBX • Resale Centrex • Resale ISDN • LNP (Standalone) • INP (Standalone) • 2W Analog Loop Design • 2W Analog Loop Non-Design • 2W Analog Loop With LNP-Design • 2W Analog Loop With LNP Non-Design • 2W Analog Loop With INP-Design • 2W Analog Loop With INP Non-Design • UNE Digital Loop < DS1 • UNE Digital Loop >=DS1 • UNE Loop + Port Combinations • UNE Switch ports • UNE Combo Other • UNE xDSL (HDSL, ADSL and UCL) • UNE ISDN • UNE Line Sharing • UNE Other Design • UNE Other Non -Design • Local Transport (Unbundled Interoffice Transport) • Local Interconnection Trunks	• Diagnostic

SEEM Measure

SEEM Measure		
No	Tier I	
	Tier II	

SEEM Disaggregation - Analog/Benchmark

SEEM Disaggregation	SEEM Analog/Benchmark
• Not Applicable	• Not Applicable

P-7: Coordinated Customer Conversions Interval

Definition

This report measures the average time it takes BellSouth to disconnect an unbundled loop from the BellSouth switch and cross connect it to CLEC equipment. This measurement applies to service orders with INP and with LNP, and where the CLEC has requested BellSouth to provide a coordinated cut over.

Exclusions

- Any order canceled by the CLEC will be excluded from this measurement
- Delays due to CLEC following disconnection of the unbundled loop
- Unbundled Loops where there is no existing subscriber loop and loops where coordination is not requested

Business Rules

When the service order includes INP, the interval includes the total time for the cut over including the translation time to place the line back in service on the ported line. When the service order includes LNP, the interval only includes the total time for the cut over (the port of the number is controlled by the CLEC). The interval is calculated for the entire cut over time for the service order and then divided by items worked in that time to give the average per-item interval for each service order.

Calculation

Coordinated Customer Conversions Interval = (a - b)

- a = Completion Date and Time for Cross Connection of a Coordinated Unbundled Loop
- b = Disconnection Date and Time of an Coordinated Unbundled Loop

Percent Coordinated Customer Conversions (for each interval) = (c / d) X 100

- c = Total number of Coordinated Customer Conversions for each interval
- d = Total Number of Unbundled Loop with Coordinated Conversions (items) for the reporting period

Report Structure

- CLEC Specific
- CLEC Aggregate
- The interval breakout is 0-5 = 0-4.99, 5-15 = 5-14.99, >=15 = 15 and greater, plus Overall Average Interval.

Data Retained

Relating to CLEC Experience	Relating to BellSouth Performance
• Report Month • CLEC Order Number • Committed Due Date (DD) • Service Type (CLASS_SVC_DESC) • Cut over Start Time • Cut over Completion Time • Portability Start and Completion Times (INP orders) • Total Conversions (Items) **Note:** Code in parentheses is the corresponding header found in the raw data file.	• No BellSouth Analog Exists

SQM Disaggregation - Analog/Benchmark

SQM Level of Disaggregation	SQM Analog/Benchmark
• Unbundled Loops with INP/LNP • Unbundled Loops without INP/LNP	• 95% <= 15 minutes

SEEM Measure

SEEM Measure		
Yes	Tier I	X
	Tier II	X

SEEM Disaggregation - Analog/Benchmark

SEEM Disaggregation	SEEM Analog/Benchmark
• Unbundled Loops	• 95% <= 15 minutes

P-7A: Coordinated Customer Conversions – Hot Cut Timeliness% Within Interval and Average Interval

Definition

This category measures whether BellSouth begins the cut over of an unbundled loop on a coordinated and/or a time specific order at the CLEC requested start time. It measures the percentage of orders where the cut begins within 15 minutes of the requested start time of the order and the average interval.

Exclusions

- Any order canceled by the CLEC will be excluded from this measurement
- Delays caused by the CLEC
- Unbundled Loops where there is no existing subscriber loop and loops where coordination is not requested
- All unbundled loops on multiple loop orders after the first loop

Business Rules

This report measures whether BellSouth begins the cut over of an unbundled loop on a coordinated and/or a time specific order at the CLEC requested start time. The cut is considered on time if it starts 15 minutes before or after the requested start time. Using the scheduled time and the actual cut over start time, the measurement will calculate the percent within interval and the average interval. If a cut involves multiple lines, the cut will be considered "on time" if the first line is cut within the interval. <= 15 minutes includes intervals that began 15:00 minutes or less before the scheduled cut time and cuts that began 15 minutes or less after the scheduled cut time; >15 minutes, <= 30 minutes includes cuts within 15:00 – 30:00 minutes either prior to or after the scheduled cut time; >30 minutes includes cuts greater than 30:00 minutes either prior to or after the scheduled cut time.

Calculation

% within Interval = (a / b) X 100

- a = Total Number of Coordinated Unbundled Loop Orders for the interval
- b = Total Number of Coordinated Unbundled Loop Orders for the reporting period

Interval = (c - d)

- c = Scheduled Time for Cross Connection of a Coordinated Unbundled Loop Order
- d = Actual Start Date and Time of a Coordinated Unbundled Loop Order

Average Interval = (e / f)

- Sum of all Intervals
- Total Number of Coordinated Unbundled Loop Orders for the reporting period.

Report Structure

- CLEC Specific
- CLEC Aggregate

  Reported in intervals of early, on time and late cuts % <=15 minutes; % >15 minutes, <= 30 minutes; % > 30 minutes, plus Overall Average Interval.

Data Retained

Relating to CLEC Experience	Relating to BellSouth Performance
• Report Month • CLEC Order Number (so_nbr) • Committed Due Date (DD) • Service Type (CLASS_SVC_DESC) • Cut over Scheduled Start Time • Cut over Actual Start Time • Total Conversions Orders **Note:** Code in parentheses is the corresponding header found in the raw data file.	• No BellSouth Analog exists

SQM Disaggregation - Analog/Benchmark

SQM Level of Disaggregation	SQM Analog/Benchmark
• Product Reporting Level - SL1 Time Specific - SL1 Non-Time Specific - SL2 Time Specific - SL2 Non-Time Specific	• 95% Within + or – 15 minutes of Scheduled Start Time

SEEM Measure

SEEM Measure		
Yes	Tier I	X
	Tier II	X

SEEM Disaggregation - Analog/Benchmark

SEEM Disaggregation	SEEM Analog/Benchmark
• UNE Loops	• 95% Within + or – 15 minutes of Scheduled Start time

P-7B: Coordinated Customer Conversions – Average Recovery Time

Definition

Measures the time between notification and resolution by BellSouth of a service outage found that can be isolated to the BellSouth side of the network. The time between notification and resolution by BellSouth must be measured to ensure that CLEC customers do not experience unjustifiable lengthy service outages during a Coordinated Customer Conversion. This report measures outages associated with Coordinated Customer Conversions prior to service order completion.

Exclusions

- Cut overs where service outages are due to CLEC caused reasons
- Cut overs where service outages are due to end-user caused reasons

Business Rules

Measures the outage duration time related to Coordinated Customer Conversions from the initial trouble notification until the trouble has been restored and the CLEC has been notified. The duration time is defined as the time from the initial trouble notification until the trouble has been restored and the CLEC has been notified. The interval is calculated on the total outage time for the circuits divided by the total number of outages restored during the report period to give the average outage duration.

Calculation

Recovery Time = (a - b)

- a = Date & Time That Trouble is Closed by CLEC
- b = Date & Time Initial Trouble is Opened with BellSouth

Average Recovery Time = (c / d)

- c = Sum of all the Recovery Times
- d = Number of Troubles Referred to the BellSouth

Report Structure

- CLEC Specific
- CLEC Aggregate

Data Retained

Relating to CLEC Experience	Relating to BellSouth Performance
• Report Month • CLEC Company Name • CLEC Order Number (so_nbr) • Committed Due Date (DD) • Service Type (CLASS_SVC_DESC) • CLEC Acceptance Conflict (CLEC_CONFLICT) • CLEC Conflict Resolved (CLEC_RESOLVE) • CLEC Conflict MFC (CLEC_CONFLICT_MFC) • Total Conversion Orders **Note:** Code in parentheses is the corresponding header found in the raw data file.	• None

SQM Disaggregation - Analog/Benchmark

SQM Level of Disaggregation	SQM Analog/Benchmark
• Unbundled Loops with INP/LNP • Unbundled Loops without INP/LNP	• Diagnostic

SEEM Measure

SEEM Measure		
No	Tier I	
	Tier II	

SEEM Disaggregation - Analog/Benchmark

SEEM Disaggregation	SEEM Analog/Benchmark
• Not Applicable	• Not Applicable

P-7C: Hot Cut Conversions - % Provisioning Troubles Received Within 7 days of a completed Service Order

Definition

Percent Provisioning Troubles received within 7 days of a completed service order associated with a Coordinated and Non-Coordinated Customer Conversion. Measures the quality and accuracy of Hot Cut Conversion Activities.

Exclusions

- Any order canceled by the CLEC
- Troubles caused by Customer Provided Equipment

Business Rules

Measures the quality and accuracy of completed service orders associated with Coordinated and Non-Coordinated Hot Cut Conversions. The first trouble report received on a circuit ID within 7 days following a service order completion is counted in this measure. Subsequent trouble reports are measured in Repeat Report Rate. Reports are calculated searching in the prior report period for completed Coordinated and Non-Coordinated Hot Cut Conversion service orders and following 7 days after the completion of the service order for a trouble report issue date.

Calculation

% Provisioning Troubles within 7 days of service order completion = (a / b) X 100

- a = The sum of all Hot Cut Circuits with a trouble within 7 days following service order(s) completion
- b = The total number of Hot Cut service order circuits completed in the previous report calendar month

Report Structure

- CLEC Specific
- CLEC Aggregate
- Dispatch/Non-Dispatch

Data Retained

Relating to CLEC Experience	Relating to BellSouth Performance
• Report Month • CLEC Order Number (so_nbr) • PON • Order Submission Date (TICKET_ID) • Order Submission Time (TICKET_ID) • Status Type • Status Notice Date • Standard Order Activity • Geographic Scope • Total Conversion Circuits **Note:** Code in parentheses is the corresponding header found in the raw data file.	• No BellSouth Analog Exists

SQM Disaggregation - Analog/Benchmark

SQM Level of Disaggregation	SQM Analog/Benchmark
• UNE Loop Design • UNE Loop Non-Design	• <= 5%

SEEM Measure

SEEM Measure		
Yes	Tier I	X
	Tier II	X

SEEM Disaggregation - Analog/Benchmark

SEEM Disaggregation	SEEM Analog/Benchmark
• UNE Loops	• <= 5%

P-8: Cooperative Acceptance Testing - % of xDSL Loops Tested

Definition

The loop will be considered cooperatively tested when the BellSouth technician places a call to the CLEC representative to initiate cooperative testing and jointly performs the tests with the CLEC.

Exclusions

- Testing failures due to CLEC (incorrect contact number, CLEC not ready, etc.)
- xDSL lines with no request for cooperative testing

Business Rules

When a BellSouth technician finishes delivering an order for an xDSL loop where the CLEC order calls for cooperative testing at the customer's premise, the BellSouth technician is to call a toll free number to the CLEC testing center. The BellSouth technician and the CLEC representative at the center then test the line. As an example of the type of testing performed, the testing center may ask the technician to put a short on the line so that the center can run a test to see if it can identify the short.

Calculation

Cooperative Acceptance Testing - % of xDSL Loops Tested = (a / b) X 100

- a = Total number of successful xDSL cooperative tests for xDSL lines where cooperative testing was requested in the reporting period
- b = Total Number of xDSL line tests requested by the CLEC and scheduled in the reporting period

Report Structure

- CLEC Specific
- CLEC Aggregate
- Type of Loop tested

Data Retained

Relating to CLEC Experience	Relating to BellSouth Performance
• Report Month • CLEC Company Name (OCN) • CLEC Order Number (so_nbr) and PON (PON) • Committed Due Date (DD) • Service Type (CLASS_SVC_DESC) • Acceptance Testing Completed (ACCEPT_TESTING) • Acceptance Testing Declined (ACCEPT_TESTING) • Total xDSL Orders **Note**: Code in parentheses is the corresponding header found in the raw data file.	• No BellSouth Analog Exists

SQM Disaggregation - Analog/Benchmark

SQM Level of Disaggregation:	SQM Analog/Benchmark:
• UNE xDSL - ADSL - HDSL - UCL - OTHER	• 95% of Lines Tested

SEEM Measure

SEEM Measure		
Yes	Tier I	X
	Tier II	X

SEEM Disaggregation - Analog/Benchmark

SEEM Disaggregation	SEEM Analog/Benchmark
• UNE xDSL	• 95% of Lines Tested

P-9: % Provisioning Troubles within 30 days of Service Order Completion

Definition

Percent Provisioning Troubles within 30 days of Service Order Completion measures the quality and accuracy of Service order activities.

Exclusions

- Canceled Service Orders
- Order Activities of BellSouth or the CLEC associated with internal or administrative use of local services (Record Orders, Listing Orders, Test Orders, etc.)
- D & F orders
- Trouble reports caused and closed out to Customer Provided Equipment (CPE)

Business Rules

Measures the quality and accuracy of completed orders. The first trouble report from a service order after completion is counted in this measure. Subsequent trouble reports are measured in Repeat Report Rate. Reports are calculated searching in the prior report period for completed service orders and following 30 days after completion of the service order for a trouble report issue date.

D & F orders are excluded as there is no subsequent activity following a disconnect.

Note: Standalone LNP historical data is not available in the maintenance systems (LMOS or WFA).

Calculation

% Provisioning Troubles within 30 days of Service Order Activity = (a / b) X 100

- a = Trouble reports on all completed orders 30 days following service order(s) completion
- b = All Service Orders completed in the previous report calendar month

Report Structure

- CLEC Specific
- CLEC Aggregate
- BellSouth Aggregate
- Reported in categories of <10 line/circuits; >= 10 line/circuits (except trunks)
- Dispatch / No Dispatch (except trunks)

Data Retained

Relating to CLEC Experience	Relating to BellSouth Performance
• Report Month • CLEC Order Number and PON • Order Submission Date (TICKET_ID) • Order Submission Time (TICKET_ID) • Status Type • Status Notice Date • Standard Order Activity • Geographic Scope **Note:** Code in parentheses is the corresponding header found in the raw data file.	• Report Month • BellSouth Order Number • Order Submission Date • Order Submission Time • Status Type • Status Notice Date • Standard Order Activity • Geographic Scope

SQM Disaggregation - Analog/Benchmark

SQM Level of Disaggregation	SQM Analog/Benchmark
• Resale Residence	• Retail Residence
• Resale Business	• Retail Business
• Resale Design	• Retail Design
• Resale PBX	• Retail PBX
• Resale Centrex	• Retail Centrex
• Resale ISDN	• Retail ISDN
• 2W Analog Loop Design	• Retail Residence and Business Dispatch
• 2W Analog Loop Non-Design - Dispatch - Non-Dispatch (Dispatch In)	• Retail Residence and Business - (POTS Excluding Switch-Based Orders) - Dispatch - Non-Dispatch (Dispatch In)
• 2W Analog Loop With LNP Design	• Retail Residence and Business Dispatch
• 2W Analog Loop With LNP Non-Design - Dispatch - Non-Dispatch (Dispatch In)	• Retail Residence and Business - (POTS Excluding Switch-Based Orders) - Dispatch - Non-Dispatch (Dispatch In)
• 2W Analog Loop With INP Design	• Retail Residence and Business Dispatch
• 2W Analog Loop With INP Non-Design - Dispatch - Non-Dispatch (Dispatch In)	• Retail Residence and Business (POTS - Excluding Switch-Based Orders) - Dispatch - Non-Dispatch (Dispatch In)
• UNE Digital Loop < DS1	• Retail Digital Loop < DS1
• UNE Digital Loop >= DS1	• Retail Digital Loop >= DS1
• UNE xDSL (HDSL, ADSL and UCL)	• ADSL provided to Retail
• UNE ISDN	• Retail ISDN BRI
• UNE Line Sharing	• ADSL Provided to Retail
• INP (Standalone)	• Retail Residence and Business (POTS)
• LNP (Standalone)	• Retail Residence and Business (POTS)
• UNE Loop + Port Combinations - Dispatch Out - Non-Dispatch - Dispatch In - Switch-Based	• Retail Residence and Business - Dispatch Out - Non-Dispatch - Dispatch In - Switch-Based
• UNE Switch Ports	• Retail Residence and Business (POTS)
• UNE Combo Other - Dispatch - Non-Dispatch (Dispatch In)	• Retail Residence, Business and Design Dispatch (Including Dispatch Out and Dispatch In) - Dispatch - Non-Dispatch (Dispatch In)
• Local Transport (Unbundled Interoffice Transport)	• Retail DS1/DS3 Interoffice
• UNE Other Non-Design	• Retail Residence and Business
• UNE Other Design	• Retail Design
• Local Interconnection Trunks	• Parity with Retail

SEEM Measure

SEEM Measure		
Yes	Tier I	X
	Tier II	X

SEEM Disaggregation - Analog/Benchmark

SEEM Disaggregation	SEEM Analog/Benchmark
• Resale POTS	• Retail Residence and Business (POTS)
• Resale Design	• Retail Design
• UNE Loop + Port Combinations	• Retail Residence and Business
• UNE Loops	• Retail Residence and Business Dispatch
• UNE xDSL	• ADSL Provided to Retail
• UNE Line Sharing	• ADSL Provided to Retail
• Local Interconnection Trunks	• Parity with Retail

P-10: Total Service Order Cycle Time (TSOCT)

Definition

This report measures the total service order cycle time from receipt of a valid service order request to the return of a completion notice to the CLEC Interface.

Exclusions

- Canceled Service Orders
- Order Activities of BellSouth or the CLEC associated with internal or administrative use of local services (Record Orders, Listing Orders, Test Orders, etc.)
- D (Disconnect - Except "D" orders associated with LNP Standalone.) and F (From) orders. (From is disconnect side of a move order when the customer moves to a new address)
- "L" Appointment coded orders (where the customer has requested a later than offered interval)
- Orders with CLEC/Subscriber caused delays or CLEC/Subscriber requested due date changes

Business Rules

The interval is determined for each order processed during the reporting period. This measurement combines three reports: FOC Timeliness, Average Order Completion Interval and Average Completion Notice Interval. For UNE XDSL Loop, this measurement combines Service Inquiry Interval (SI), FOC Timeliness, Average Completion Interval, and Average Completion Notice Interval.

This interval starts with the receipt of a valid service order request and stops when a completion notice is sent to the CLEC Interface (LENS, TAG OR EDI) and the BellSouth Legacy Systems. Elapsed time for each order is accumulated for each reporting dimension. The accumulated time for each reporting dimension is then divided by the associated total number of orders completed. Orders that are worked on zero due dates are calculated with a .33 day interval (8 hours) in order to report a portion of a day interval. These orders are issued and worked/completed on same day. They can be either flow through orders (no field work-non-dispatched) or field orders (dispatched).

Reporting is by Fully Mechanized, Partially Mechanized and Non-Mechanized receipt of LSRs.

Calculation

Total Service Order Cycle Time = (a - b)

- a = Service Order Completion Notice Date
- b = Service Request Receipt Date

Average Total Service Order Cycle Time = (c / d)

- c = Sum of all Total Service Order Cycle Times
- d = Total Number Service Orders Completed in Reporting Period

Total Service Order Cycle Time Interval Distribution (for each interval) = (e / f) X 100

- e = Total Number of Service Requests Completed in "X" minutes/hours
- f = Total Number of Service Requests Received in Reporting Period

Report Structure

- CLEC Specific
- CLEC Aggregate
- BellSouth Aggregate
- Fully Mechanized; Partially Mechanized; Non-Mechanized
- Report in categories of <10 line/circuits; >= 10 line/circuits (except trunks)
- Dispatch / No Dispatch categories applicable to all levels except trunks
- Intervals 0-5, 5-10, 10-15, 15-20, 20-25, 25-30, >= 30 Days. The interval breakout is: 0-5 = 0-4.99, 5-10 = 5-9.99, 10-15 = 10-14.99, 15-20 = 15-19.99, 20-25 = 20-24.99, 25-30 = 25-29.99, >= 30 = 30 and greater.

Data Retained

Relating to CLEC Experience	Relating to BellSouth Performance
• Report Month • Interval for FOC	• Report Month • BellSouth Order Number

• CLEC Company Name (OCN) • Order Number (PON) • Submission Date & Time (TICKET_ID) • Completion Date (CMPLTN_DT) • Completion Notice Date and Time • Service Type (CLASS_SVC_DESC) • Geographic Scope **Note:** Code in parentheses is the corresponding header found in the raw data file	• Order Submission Date & Time • Order Completion Date & Time • Service Type • Geographic Scope

SQM Disaggregation - Analog/Benchmark

SQM Level of Disaggregation	SQM Analog/Benchmark
• Resale Residence • Resale Business • Resale Design • Resale PBX • Resale Centrex • Resale ISDN • LNP (Standalone) • INP (Standalone) • 2W Analog Loop Design • 2W Analog Loop Non-Design • 2W Analog Loop With LNP Design • 2W Analog Loop With LNP Non-Design • UNE Switch Ports • UNE Loop + Port Combinations • UNE Combo Other • UNE xDSL (HDSL, ADSL and UCL) • UNE ISDN • UNE Line Sharing • UNE Other Design • UNE Other Non -Design • UNE Digital Loops < DS1 • UNE Digital Loops >= DS1 • Local Transport (Unbundled Interoffice Transport) • Local Interconnection Trunks	• Diagnostic

SEEM Measure

SEEM Measure		
No	Tier I	
	Tier II	

SEEM Disaggregation - Analog/Benchmark

SEEM Disaggregation	SEEM Analog/Benchmark
• Not Applicable	• Not Applicable

P-11: Service Order Accuracy

Definition

The “service order accuracy” measurement measures the accuracy and completeness of a sample of BellSouth service orders by comparing what was ordered and what was completed.

Exclusions

- Cancelled Service Orders
- Order Activities of BellSouth or the CLEC associated with internal or administrative use of local services (Record Orders, Listing Orders, Test Orders, etc.)
- D & F orders

Business Rules

A statistically valid sample of service orders, completed during a monthly reporting period, is compared to the original account profile and the order that the CLEC sent to BellSouth. An order is “completed without error” if all service attributes and account detail changes (as determined by comparing the original order) completely and accurately reflect the activity specified on the original order and any supplemental CLEC order. For both small and large sample sizes, when a Service Request cannot be matched with a corresponding Service Order, it will not be counted. For small sample sizes an effort will be made to replace the service request.

Calculation

Percent Service Order Accuracy = (a / b) X 100

- a = Orders Completed without Error
- b = Orders Completed in Reporting Period

Report Structure

- CLEC Aggregate
- Reported in categories of <10 line/circuits; >= 10 line/circuits
- Dispatch / No Dispatch

Data Retained

Relating to CLEC Experience	Relating to BellSouth Performance
• Report Month • CLEC Order Number and PON • Local Service Request (LSR) • Order Submission Date • Committed Due Date • Service Type • Standard Order Activity	• No BellSouth Analog Exist

SQM Disaggregation - Analog/Benchmark

SQM Level of Disaggregation	SQM Analog/Benchmark
• Resale Residence • Resale Business • Resale Design (Specials) • UNE Specials (Design) • UNE (Non-Design) • Local Interconnection Trunks	• 95% Accurate

SEEM Measure

SEEM Measure		
No	Tier I	
	Tier II	

SEEM Disaggregation - Analog/Benchmark

SEEM Disaggregation	SEEM Analog/Benchmark
• Not Applicable	• Not Applicable

P-12: LNP-Percent Missed Installation Appointments

Definition

"Percent missed installation appointments" monitors the reliability of BellSouth commitments with respect to committed due dates to assure that CLECs can reliably quote expected due dates to their retail customer as compared to BellSouth. This measure is the percentage of total orders processed for which BellSouth is unable to complete the service orders on the committed due dates and reported for total misses and End User Misses.

Exclusions

- Canceled Service Orders
- Order Activities of BellSouth or the CLEC associated with internal or administrative use of local services (Record Orders, Listing Orders, Test Orders, etc.) where identifiable

Business Rules

Percent Missed Installation Appointments (PMI) is the percentage of total orders processed for which BellSouth is unable to complete the service orders on the committed due dates. Missed Appointments caused by end-user reasons will be included and reported in a separate category. The first commitment date on the service order that is a missed appointment is the missed appointment code used for calculation whether it is a BellSouth missed appointment or an End User missed appointment. The "due date" is any time on the confirmed due date, which means there cannot be a cutoff time for commitments as certain types of orders are requested to be worked after standard business hours.

Calculation

LNP Percent Missed Installation Appointments = (a / b) X 100

- a = Number of Orders with Completion date in Reporting Period past the Original Committed Due Date
- b = Number of Orders Completed in Reporting Period

Report Structure

- CLEC Specific
- CLEC Aggregate
- Geographic Scope
  - State/Region
- Report in Categories of <10 lines/circuits >= 10 lines/circuits (except trunks)

Report explanation: Total Missed Appointments is the total percent of orders missed either by BellSouth or the CLEC end user. End User MA represents the percentage of orders missed by the CLEC end user. The difference between End User Missed Appointments and Total Missed Appointments is the result of BellSouth caused misses.

Data Retained

Relating to CLEC Experience	Relating to BellSouth Performance
• Report Month • CLEC Order Number and PON (PON) • Committed Due Date (DD) • Completion Date (CMPLTN DD) • Status Type • Status Notice Date • Standard Order Activity • Geographic Scope **Note:** Code in parentheses is the corresponding header found in the raw data file.	• Not Applicable

SQM Disaggregation - Analog/Benchmark

SQM Level of Disaggregation	SQM Analog/Benchmark
• LNP	• Retail Residence and Business (POTS)

SEEM Measure

SEEM Measure		
Yes	Tier I	X
	Tier II	X

SEEM Disaggregation - Analog/Benchmark

SEEM Disaggregation	SEEM Analog/Benchmark
• LNP	• 95% Due Dates Met[a]

[a]*Due to data structure issues, BellSouth is using a benchmark comparison for SEEM rather than the Truncated Z as stated in the Order.*

P-13: LNP-Average Disconnect Timeliness Interval & Disconnect Timeliness Interval Distribution

Definition

Disconnect Timeliness is defined as the interval between the time ESI Number Manager receives the valid 'Number Ported' message from NPAC (signifying the CLEC 'Activate') until the time the Disconnect is completed in the Central Office switch. This interval effectively measures BellSouth responsiveness by isolating it from impacts that are caused by CLEC related activities.

Exclusions

- Canceled Service Orders
- Order Activities of BellSouth or the CLEC associated with internal or administrative use of local services (Record Orders, Listing Orders, Test Orders, etc.) where identifiable.

Business Rules

The Disconnect Timeliness interval is determined for each telephone number ported associated with a disconnect service order processed on an LSR during the reporting period. The Disconnect Timeliness interval is the elapsed time from when BellSouth receives a valid 'Number Ported' message in ESI Number Manager (signifying the CLEC 'Activate') for each telephone number ported until each telephone number on the service order is disconnected in the Central Office switch. Elapsed time for each ported telephone number is accumulated for each reporting dimension. The accumulated time for each reporting dimension is then divided by the total number of selected telephone numbers disconnected in the reporting period.

Calculation

Disconnect Timeliness Interval = (a - b)

- a = Completion Date and Time in Central Office switch for each number on disconnect order
- b = Valid 'Number Ported' message received date & time

Average Disconnect Timeliness Interval = (c / d)

- c = Sum of all Disconnect Timeliness Intervals
- d = Total Number of disconnected numbers completed in reporting period

Disconnect Timeliness Interval Distribution (for each interval) = (e / f) X 100

- e = Disconnected numbers completed in "X" days
- f = Total disconnect numbers completed in reporting period

Report Structure

- CLEC Specific
- CLEC Aggregate
- Geographic Scope
  - State, Region

Data Retained

Relating to CLEC Experience	Relating to BellSouth Performance
• Order Number • Telephone Number/Circuit Number • Committed Due Date • Receipt Date/Time (ESI Number Manager) • Date/Time of Recent Change Notice	• Not Applicable

SQM Disaggregation - Analog/Benchmark

SQM Level of Disaggregation	SQM Analog/Benchmark
• LNP	• 95% <= 15 Minutes

SEEM Measure

SEEM Measure		
Yes	Tier I	X
	Tier II	X

SEEM Disaggregation - Analog/Benchmark

SEEM Disaggregation	SEEM Analog/Benchmark
• LNP Standalone	• 95% <= 15 Minutes

P-14: LNP-Total Service Order Cycle Time (TSOCT)

Definition

Total Service Order Cycle Time measures the interval from receipt of a valid service order request to the completion of the final service order associated with that service request.

Exclusions

- Canceled Service Orders
- Order Activities of BellSouth or the CLEC associated with internal or administrative use of local services (Record Orders, Listing Orders, Test Orders, etc.) where identifiable
- “L” appointment coded orders (indicating the customer has requested a later than offered interval)
- ”S” missed appointment coded orders (indicating subscriber missed appointments), except for “SP” codes (indicating subscriber prior due date requested). This would include “S” codes assigned to subsequent due date changes.

Business Rules

The interval is determined for each order processed during the reporting period. This measurement combines three reports: FOC Timeliness, Average Order Completion Interval and Average Completion Notice Interval.

This interval starts with the receipt of a valid service order request and stops when a completion notice is sent to the CLEC Interface (LENS, TAG OR EDI). Elapsed time for each order is accumulated for each reporting dimension. The accumulated time for each reporting dimension is then divided by the associated total number of orders completed. Orders that are worked on zero due dates are calculated with a .33 day interval (8 hours) in order to report a portion of a day interval. These orders are issued and worked/completed on the same day.

Reporting is by Fully Mechanized, Partially Mechanized and Non-Mechanized receipt of LSRs.

Calculation

Total Service Order Cycle Time = (a - b)

- a = Service Order Completion Notice Date
- b = Service Request Receipt Date

Average Total Service Order Cycle Time = (c / d)

- c = Sum of all Total Service Order Cycle Times
- d = Total Number Service Orders Completed in Reporting Period

Total Service Order Cycle Time Interval Distribution (for each interval) = (e / f) X 100

- e = Total Number of Service Orders Completed in “X” minutes/hours
- f = Total Number of Service Orders Received in Reporting Period

Report Structure

- CLEC Specific
- CLEC Aggregate
- Fully Mechanized; Partially Mechanized; Non-Mechanized
- Report in categories of < 10 lines/circuits; >= lines/circuits (except trunks)
- Intervals 0-5, 5-10, 10-15, 15-20, 20-25, 25-30, >= 30 Days. The interval breakout is: 0-5 = 0-4.99, 5-10 = 5-9.99, 10-15 = 10-14.99, 15-20 = 15-19.99, 20-25 = 20-24.99, 25-30 = 25-29.99, >= 30 = 30 and greater.

Data Retained

Relating to CLEC Experience	Relating to BellSouth Performance
• Report Month • Interval for FOC • CLEC Company Name (OCN) • Order Number (PON) • Submission Date & Time (TICKET_ID) • Completion Date (CMPLTN_DT) • Completion Notice Date and Time	• Not Applicable

• Service Type (CLASS_SVC_DESC) • Geographic Scope **Note:** Code in parentheses is the corresponding header found in the raw data file	

SQM Disaggregation - Analog/Benchmark

SQM Level of Disaggregation	SQM Analog/Benchmark
• LNP	• Diagnostic

SEEM Measure

SEEM Measure		
No	Tier I	
	Tier II	

SEEM Disaggregation - Analog/Benchmark

SEEM Disaggregation	SEEM Analog/Benchmark
• Not Applicable	• Not Applicable

Section 4: Section 4: Maintenance & Repair

M&R-1: Missed Repair Appointments

Definition

The percent of trouble reports not cleared by the committed date and time.

Exclusions

- Trouble tickets canceled at the CLEC request
- BellSouth trouble reports associated with internal or administrative service
- Customer Provided Equipment (CPE) troubles or CLEC Equipment Trouble

Business Rules

The negotiated commitment date and time is established when the repair report is received. The cleared time is the date and time that BellSouth personnel clear the trouble and closes the trouble report in his/her Computer Access Terminal (CAT) or workstation. If this is after the Commitment time, the report is flagged as a "Missed Commitment" or a missed repair appointment. When the data for this measure is collected for BellSouth and a CLEC, it can be used to compare the percentage of the time repair appointments are missed due to BellSouth reasons. (No access reports are not part of this measure because they are not a missed appointment.)

Note: Appointment intervals vary with force availability in the POTS environment. Specials and Trunk intervals are standard interval appointments of no greater than 24 hours. Standalone LNP historical data is not available in the maintenance systems (LMOS or WFA).

Calculation

Percentage of Missed Repair Appointments = (a / b) X 100

- a = Count of Customer Troubles Not Cleared by the Quoted Commitment Date and Time
- b = Total Trouble reports closed in Reporting Period

Report Structure

- Dispatch/Non-Dispatch
- CLEC Specific
- CLEC Aggregate
- BellSouth Aggregate

Data Retained

Relating to CLEC Experience	Relating to BellSouth Performance
• Report Month • CLEC Company Name • Submission Date & Time (TICKET_ID) • Completion Date (CMPLTN_DT) • Service Type (CLASS_SVC_DESC) • Disposition and Cause (CAUSE_CD & CAUSE_DESC) • Geographic Scope **Note**: Code in parentheses is the corresponding header found in the raw data file.	• Report Month • BellSouth Company Code • Submission Date & Time • Completion Date • Service Type • Disposition and Cause (Non-Design /Non-Special Only) • Trouble Code (Design and Trunking Services) • Geographic Scope

SQM Disaggregation - Analog/Benchmark

SQM Level of Disaggregation	SQM Analog/Benchmark
• Resale Residence	• Retail Residence
• Resale Business	• Retail business
• Resale Design	• Retail Design
• Resale PBX	•
• Resale Centrex	• Retail Centrex
• Resale ISDN	• Retail ISDN
• LNP (Standalone) (Not Available in Maintenance)	• Not Applicable
• 2W Analog Loop Design	• Retail Residence & Business Dispatch
• 2W Analog Loop Non - Design	• Retail Residence & Business (POTS) (Exclusion of Switch-Based Feature Troubles)
• UNE Loop + Port Combinations	• Retail Residence & Business
• UNE Switch Ports	• Retail Residence & Business (POTS)
• UNE Combo Other	• Retail Residence, Business and Design Dispatch
• UNE xDSL (HDSL, ADSL and UCL)	• ADSL Provided to Retail
• UNE ISDN	• Retail ISDN – BRI
• UNE Line Sharing	• ADSL Provided to Retail
• UNE Other Design	• Retail Design
• UNE Other Non - Design	• Retail Residence & Business
• Local Interconnection Trunks	• Parity with Retail
• Local Transport (Unbundled Interoffice Transport)	• Retail DS1/DS3 Interoffice

SEEM Measure

SEEM Measure		
Yes	Tier I	X
	Tier II	X

SEEM Disaggregation - Analog/Benchmark

SEEM Disaggregation	SEEM Analog/Benchmark
• Resale POTS	• Retail Residence and Business (POTS)
• Resale Design	• Retail Design
• UNE Loop + Port Combinations	• Retail Residence and Business
• UNE Loops	• Retail Residence and Business Dispatch
• UNE xDSL	• ADSL Provided to Retail
• UNE Line Sharing	• ADSL Provided to Retail
• Local Interconnection Trunks	• Parity with Retail

M&R-2: Customer Trouble Report Rate

Definition

Percent of initial and repeated customer direct or referred troubles reported within a calendar month per 100 lines/circuits in service.

Exclusions

- Trouble tickets canceled at the CLEC request
- BellSouth trouble reports associated with internal or administrative service
- Customer Provided Equipment (CPE) troubles or CLEC Equipment Trouble

Business Rules

Customer Trouble Report Rate is computed by accumulating the number of maintenance initial and repeated trouble reports during the reporting period. The resulting number of trouble reports are divided by the total "number of service" lines, ports or combination that exist for the CLECs and BellSouth respectively at the end of the report month.

Calculation

Customer Trouble Report Rate = (a / b) X 100

- a = Count of Initial and Repeated Trouble Reports closed in the Current Period
- b = Number of Service Access Lines in service at End of the Report Period

Report Structure

- Dispatch/Non-Dispatch
- CLEC Specific
- CLEC Aggregate
- BellSouth Aggregate

Data Retained

Relating to CLEC Experience	Relating to BellSouth Performance
• Report Month • CLEC Company Name • Ticket Submission Date & Time (TICKET_ID) • Ticket Completion Date (CMPLTN_DT) • Service Type (CLASS_SVC_DESC) • Disposition and Cause (CAUSE_CD & CAUSE_DESC) • # Service Access Lines in Service at the end of period • Geographic Scope **Note**: Code in parentheses is the corresponding header found in the raw data file.	• Report Month • BellSouth Company Code • Ticket Submission Date & Time • Ticket Completion Date • Service Type • Disposition and Cause (Non-Design /Non-Special Only) • Trouble Code (Design and Trunking Services) • # Service Access Lines in Service at the end of period • Geographic Scope

SQM Disaggregation - Analog/Benchmark

SQM Level of Disaggregation	SQM Analog/Benchmark
• Resale Residence	• Retail Residence
• Resale Business	• Retail Business
• Resale Design	• Retail Design
• Resale PBX	• Retail PBX
• Resale Centrex	• Retail Centrex
• Resale ISDN	• Retail ISDN
• LNP (Standalone) (Not Available in Maintenance)	• Not Applicable
• 2W Analog Loop Design	• Retail Residence & Business Dispatch
• 2W Analog Loop Non - Design	• Retail Residence & Business (POTS) (Exclusion of Switch-Based Feature Troubles)
• UNE Loop + Port Combinations	• Retail Residence & Business
• UNE Switch Ports	• Retail Residence & Business (POTS)
• UNE Combo Other	• Retail Residence, Business and Design Dispatch
• UNE xDSL (HDSL, ADSL and UCL)	• ADSL Provided to Retail
• UNE ISDN	• Retail ISDN – BRI
• UNE Line Sharing	• ADSL Provided to Retail
• UNE Other Design	• Retail Design
• UNE Other Non - Design	• Retail Residence & Business
• Local Interconnection Trunks	• Parity with Retail
• Local Transport (Unbundled Interoffice Transport)	• Retail DS1/DS3 Interoffice

SEEM Measure

SEEM Measure		
Yes	Tier I	X
	Tier II	X

SEEM Disaggregation - Analog/Benchmark

SEEM Disaggregation	SEEM Analog/Benchmark
• Resale POTS	• Retail Residence and Business (POTS)
• Resale Design	• Retail Design
• UNE Loop + Port Combinations	• Retail Residence and Business
• UNE Loops	• Retail Residence and Business Dispatch
• UNE xDSL	• ADSL Provided to Retail
• UNE Line Sharing	• ADSL Provided to Retail
• Local Interconnection Trunks	• Parity with Retail

M&R-3: Maintenance Average Duration

Definition

The Average duration of Customer Trouble Reports from the receipt of the Customer Trouble Report to the time the trouble report is cleared.

Exclusions

- Trouble tickets canceled at the CLEC request
- BellSouth trouble reports associated with internal or administrative service
- Customer Provided Equipment (CPE) troubles or CLEC Equipment Trouble

Business Rules

For Average Duration the clock starts on the date and time of the receipt of a correct repair request. The clock stops on the date and time the service is restored and the BellSouth or CLEC customer is notified (when the technician completes the trouble ticket on his/her CAT or work systems).

Calculation

Maintenance Duration = (a - b)

- a = Date and Time of Service Restoration
- b = Date and Time Trouble Ticket was Opened

Average Maintenance Duration = (c / d)

- c = Total of all maintenance durations in the reporting period
- d = Total Closed Troubles in the reporting period

Report Structure

- Dispatch/Non-Dispatch
- CLEC Specific
- CLEC Aggregate
- BellSouth Aggregate

Data Retained

Relating to CLEC Experience	Relating to BellSouth Performance
• Report Month • Total Tickets (LINE_NBR) • CLEC Company Name • Ticket Submission Date & Time (TICKET_ID) • Ticket Completion Date (CMPLTN_DT) • Service Type (CLASS_SVC_DESC) • Disposition and Cause (CAUSE_CD & CAUSE_DESC) • Geographic Scope **Note**: Code in parentheses is the corresponding header found in the raw data file.	• Report Month • Total Tickets • BellSouth Company Code • Ticket Submission Date • Ticket Submission Time • Ticket Completion Date • Ticket Completion Time • Total Duration Time • Service Type • Disposition and Cause (Non-Design /Non-Special Only) • Trouble Code (Design and Trunking Services) • Geographic Scope

SQM Disaggregation - Analog/Benchmark

SQM Level of Disaggregation	SQM Analog/Benchmark
• Resale Residence	• Retail Residence
• Resale Business	• Retail Business
• Resale Design	• Retail Design
• Resale PBX	• Retail PBX
• Resale Centrex	• Retail Centrex
• Resale ISDN	• Retail ISDN
• LNP (Standalone) (Not Available in Maintenance)	• Not Applicable
• 2W Analog Loop Design	• Retail Residence & Business Dispatch
• 2W Analog Loop Non - Design	• Retail Residence & Business (POTS) (Exclusion of Switch-Based Feature Troubles)
• UNE Loop + Port Combinations	• Retail Residence & Business
• UNE Switch Ports	• Retail Residence & Business (POTS)
• UNE Combo Other	• Retail Residence, Business and Design Dispatch
• UNE xDSL (HDSL, ADSL and UCL)	• ADSL Provided to Retail
• UNE ISDN	• Retail ISDN – BRI
• UNE Line Sharing	• ADSL Provided to Retail
• UNE Other Design	• Retail Design
• UNE Other Non - Design	• Retail Residence & Business
• Local Interconnection Trunks	• Parity with Retail
• Local Transport (Unbundled Interoffice Transport)	• Retail DS1/DS3 Interoffice

SEEM Measure

SEEM Measure		
Yes	Tier I	X
	Tier II	X

SEEM Disaggregation - Analog/Benchmark

SEEM Disaggregation	SEEM Analog/Benchmark
• Resale POTS	• Retail Residence and Business (POTS)
• Resale Design	• Retail Design
• UNE Loop + Port Combinations	• Retail Residence and Business
• UNE Loops	• Retail Residence and Business Dispatch
• UNE xDSL	• ADSL Provided to Retail
• UNE Line Sharing	• ADSL Provided to Retail
• Local Interconnection Trunks	• Parity with Retail

M&R-4: Percent Repeat Troubles within 30 Days

Definition

Closed trouble reports on the same line/circuit as a previous trouble report received within 30 calendar days as a percent of total troubles closed reported

Exclusions

- Trouble tickets canceled at the CLEC request
- BellSouth trouble reports associated with internal or administrative service
- Customer Provided Equipment (CPE) troubles or CLEC Equipment Trouble

Business Rules

Includes Customer trouble reports received within 30 days of an original Customer trouble report.

Calculation

Percent Repeat Troubles within 30 Days = (a / b) X 100

- a = Count of closed Customer Troubles where more than one trouble report was logged for the same service line within a continuous 30 days
- b = Total Trouble Reports Closed in Reporting Period

Report Structure

- Dispatch/Non-Dispatch
- CLEC Specific
- CLEC Aggregate
- BellSouth Aggregate

Data Retained

Relating to CLEC Experience	Relating to BellSouth Performance
• Report Month • Total Tickets (LINE_NBR) • CLEC Company Name • Ticket Submission Date & Time (TICKET_ID) • Ticket Completion Date (CMPLTN_DT) • Total and Percent Repeat Trouble Reports within 30 Days (TOT_REPEAT) • Service Type • Disposition and Cause (CAUSE_CD & CAUSE_DESC) • Geographic Scope **Note**: Code in parentheses is the corresponding header found in the raw data file.	• Report Month • Total Tickets • BellSouth Company Code • Ticket Submission Date • Ticket Submission Time • Ticket Completion Date • Ticket Completion Time • Total and Percent Repeat Trouble Reports within 30 Days • Service Type • Disposition and Cause (Non-Design /Non-Special Only) • Trouble Code (Design and Trunking Services) • Geographic Scope

SQM Disaggregation - Analog/Benchmark

SQM Level of Disaggregation	SQM Analog/Benchmark
• Resale Residence	• Retail Residence
• Resale Business	• Retail Business
• Resale Design	• Retail Design
• Resale PBX	• Retail PBX
• Resale Centrex	• Retail Centrex
• Resale ISDN	• Retail ISDN
• LNP (Standalone) (Not Available in Maintenance)	• Not Applicable
• 2W Analog Loop Design	• Retail Residence & Business Dispatch
• 2W Analog Loop Non - Design	• Retail Residence & Business (POTS) (Exclusion of Switch-Based Feature Troubles)
• UNE Loop + Port Combinations	• Retail Residence & Business
• UNE Switch Ports	• Retail Residence and Business (POTS)
• UNE Combo Other	• Retail Residence, Business & Design Dispatch
• UNE xDSL (HDSL, ADSL and UCL)	• ADSL Provided to Retail
• UNE ISDN	• Retail ISDN – BRI
• UNE Line Sharing	• ADSL Provided to Retail
• UNE Other Design	• Retail Design
• UNE Other Non - Design	• Retail Residence & Business
• Local Interconnection Trunks	• Parity with Retail
• Local Transport (Unbundled Interoffice Transport)	• Retail DS1/DS3 Interoffice

SEEM Measure

SEEM Measure		
Yes	Tier I	X
	Tier II	X

SEEM Disaggregation - Analog/Benchmark

SEEM Disaggregation	SEEM Analog/Benchmark
• Resale POTS	• Retail Residence and Business (POTS)
• Resale Design	• Retail Design
• UNE Loop + Port Combinations	• Retail Residence and Business
• UNE Loops	• Retail Residence and Business Dispatch
• UNE xDSL	• ADSL Provided to Retail
• UNE Line Sharing	• ADSL Provided to Retail
• Local Interconnection Trunks	• Parity with Retail

M&R-5: Out of Service (OOS) > 24 Hours

Definition

For Out of Service Troubles (no dial tone, cannot be called or cannot call out) the percentage of Total OOS Troubles cleared in excess of 24 hours. (All design services are considered to be out of service).

Exclusions

- Trouble Reports canceled at the CLEC request
- BellSouth Trouble Reports associated with administrative service
- Customer Provided Equipment (CPE) Troubles or CLEC Equipment Troubles

Business Rules

Customer Trouble reports that are out of service and cleared in excess of 24 hours. The clock begins when the trouble report is created in LMOS/WFA and the trouble is counted if the elapsed time exceeds 24 hours.

Calculation

Out of Service (OOS) > 24 hours = (a / b) X 100

- a = Total Cleared Troubles OOS > 24 Hours
- b = Total OOS Troubles in Reporting Period

Report Structure

- Dispatch/Non - Dispatch
- CLEC Specific
- BellSouth Aggregate
- CLEC Aggregate

Data Retained

Relating to CLEC Experience	Relating to BellSouth Performance
• Report Month • Total Tickets • CLEC Company Name • Ticket Submission Date & Time (TICKET_ID) • Ticket Completion Date (CMPLTN_DT • Percentage of Customer Troubles out of • Service > 24 Hours (OOS>24_FLAG) • Service type (CLASS_SVC_DESC) • Disposition and Cause (CAUSE_CD & CAUSE-DESC) • Geographic Scope **Note:** Code in parentheses is the corresponding header found in the raw data file.	• Report Month • Total Tickets • BellSouth Company Code • Ticket Submission Date • Ticket Submission time • Ticket Completion Date • Ticket Completion Time • Percent of Customer Troubles out of Service > 24 Hours • Service type • Disposition and Cause (Non-Design/Non-Special only) • Trouble Code (Design and Trunking Services) • Geographic Scope

SQM Disaggregation - Analog/Benchmark

SQM Level of Disaggregation	SQM Analog/Benchmark
• Resale Residence	• Retail Residence
• Resale Business	• Retail Business
• Resale Design	• Retail Design
• Resale PBX	• Retail PBX
• Resale Centrex	• Retail Centrex
• Resale ISDN	• Retail ISDN
• LNP (Standalone) (Not Available in Maintenance)	• Not Applicable
• 2W Analog Loop Design	• Retail Residence & Business Dispatch
• 2W Analog Loop Non - Design	• Retail Residence & Business (POTS) (Exclusion of Switch-Based Feature Troubles)
• UNE Loop + Port Combinations	• Retail Residence & Business
• UNE Switch Ports	• Retail Residence & Business (POTS)
• UNE Combo Other	• Retail Residence, Business and Design Dispatch
• UNE xDSL (HDSL, ADSL and UCL)	• ADSL Provided to Retail
• UNE ISDN	• Retail ISDN – BRI
• UNE Line Sharing	• ADSL Provided to Retail
• UNE Other Design	• Retail Design
• UNE Other Non - Design	• Retail Residence & Business
• Local Interconnection Trunks	• Parity with Retail
• Local Transport (Unbundled Interoffice Transport)	• Retail DS1/DS3 Interoffice

SEEM Measure

SEEM Measure		
No	Tier I	
	Tier II	

SEEM Disaggregation - Analog/Benchmark

SEEM Disaggregation	SEEM Analog/Benchmark
• Not Applicable	• Not Applicable

M&R-6: Average Answer Time – Repair Centers

Definition

This measures the average time a customer is in queue when calling a BellSouth Repair Center.

Exclusions

None

Business Rules

The clock starts when a CLEC Representative or BellSouth customer makes a choice on the Repair Center's menu and is put in queue for the next repair attendant. The clock stops when the repair attendant answers the call (abandoned calls are not included).

Note: The Total Column is a combined BellSouth Residence and Business number.

Calculation

Answer Time for BellSouth Repair Centers = (a - b)

- a = Time BellSouth Repair Attendant Answers Call
- b = Time of entry into queue after ACD Selection

Average Answer Time for BellSouth Repair Centers = (c / d)

- c = Sum of all Answer Times
- d = Total number of calls by reporting period

Report Structure

- CLEC Aggregate
- BellSouth Aggregate

Data Retained

Relating to CLEC Experience	Relating to BellSouth Performance
• CLEC Average Answer Time	• BellSouth Average Answer Time

SQM Disaggregation - Analog/Benchmark

SQM Level of Disaggregation	SQM Analog/Benchmark
• Region. CLEC/BellSouth Service Centers and BellSouth Repair Centers are regional.	• For CLEC, Average Answer Times in UNE Center and BRMC are comparable to the Average Answer Times in the BellSouth Repair Centers.

SEEM Measure

SEEM Measure		
No	Tier I	
	Tier II	

SEEM Disaggregation - Analog/Benchmark

SEEM Disaggregation	SEEM Analog/Benchmark
• Not Applicable	• Not Applicable

M&R-7: Mean Time To Notify CLEC of Network Outages

Definition

This report measures the time it takes for the BellSouth Network Management Center (NMC) to notify the CLEC of major network outages.

Exclusions

None

Business Rules

BellSouth will inform the CLEC of any major network outages (key customer accounts) via a page or email. When the BellSouth NMC becomes aware of a network incident, the CLEC and BellSouth will be notified electronically. The notification time for each outage will be measured in minutes and divided by the number of outages for the reporting period. These are broadcast messages. It is up to those receiving the message to determine if they have customers affected by the incident.

The CLECs will be notified in accordance with the rules outlined in Appendix D of the CLEC "Customer Guide" which is published on the internet at: www.interconnection.bellsouth.com/guides/other_guides/html/gopue/indexf.htm.

Calculation

Time to Notify CLEC = (a - b)

- a = Date and Time BellSouth Notified CLEC
- b = Date and Time BellSouth Detected Network Incident

Mean Time to Notify CLEC = (c / d)

- c = Sum of all Times to Notify CLEC
- d = Count of Network Incidents

Report Structure

- BellSouth Aggregate
- CLEC Aggregate
- CLEC Specific

Data Retained

Relating to CLEC Experience	Relating to BellSouth Performance
• Report Month • Major Network Events • Date/Time of Incident • Date/Time of Notification	• Report Month • Major Network Events • Date/Time of Incident • Date/Time of Notification

SQM Disaggregation - Analog/Benchmark

SQM Level of Disaggregation	SQM Analog/Benchmark
• BellSouth Aggregate • CLEC Aggregate • CLEC Specific	• Parity by Design

SEEM Measure

SEEM Measure		
No	Tier I	
	Tier II	

SEEM Disaggregation - Analog/Benchmark

SEEM Disaggregation	SEEM Analog/Benchmark
• Not Applicable	• Not Applicable

Section 5: Billing

B-1: Invoice Accuracy

Definition

This measure provides the percentage of accuracy of the billing invoices rendered to CLECs during the current month.

Exclusions

- Adjustments not related to billing errors (e.g., credits for service outage, special promotion credits, adjustments to satisfy the customer)
- Test Accounts

Business Rules

The accuracy of billing invoices delivered by BellSouth to the CLEC must enable them to provide a degree of billing accuracy comparative to BellSouth bills rendered to retail customers of BellSouth. CLECs request adjustments on bills determined to be incorrect. The BellSouth Billing verification process includes manually analyzing a sample of local bills from each bill period. The bill verification process draws from a mix of different customer billing options and types of service. An end-to-end auditing process is performed for new products and services. Internal measurements and controls are maintained on all billing processes.

Calculation

Invoice Accuracy = [(a - b) / a] X 100

- a = Absolute Value of Total Billed Revenues during current month
- b = Absolute Value of Billing Related Adjustments during current month

Report Structure

- CLEC Specific
- CLEC Aggregate
- BellSouth Aggregate
- Geographic Scope
  - Region
  - State

Data Retained

Relating to CLEC Experience	Relating to BellSouth Performance
• Report Month • Invoice Type - UNE - Resale - Interconnection • Total Billed Revenue • Billing Related Adjustments	• Report Month • Retail Type - CRIS - CABS • Total Billed Revenue • Billing Related Adjustments

SQM Disaggregation - Analog/Benchmark

SQM Level of Disaggregation	SQM Analog/Benchmark
• Product/Invoice Type - Resale - UNE - Interconnection	• CLEC Invoice Accuracy is comparable to BellSouth Invoice Accuracy

SEEM Measure

SEEM Measure		
Yes	Tier I	X
	Tier II	X

SEEM Disaggregation - Analog/Benchmark

SEEM Disaggregation	SEEM Analog/Benchmark
• CLEC State • BellSouth State	• Parity With Retail

B2: Mean Time to Deliver Invoices

Definition

Bill Distribution is calculated as follows: CRIS BILLS-The number of workdays is reported for CRIS bills. This is calculated by counting the Bill Period date as the first work day. Weekends and holidays are excluded when counting workdays. J/N Bills are counted in the CRIS work day category for the purposes of the measurement since their billing account number (Q account) is provided from the CRIS system.

CABS BILLS-The number of calendar days is reported for CABS bills. This is calculated by counting the day following the Bill Period date as the first calendar day. Weekends and holidays are included when counting the calendar days.

Exclusions

Any invoices rejected due to formatting or content errors.

Business Rules

This report measures the mean interval for timeliness of billing records delivered to CLECs in an agreed upon format. CRIS-based invoices are measured in business days, and CABS-based invoices in calendar days.

Calculation

Invoice Timeliness = (a - b)

- a = Invoice Transmission Date
- b = Close Date of Scheduled Bill Cycle

Mean Time To Deliver Invoices = (c / d)

- c = Sum of all Invoice Timeliness intervals
- d = Count of Invoices Transmitted in Reporting Period

Report Structure

- CLEC Specific
- CLEC Aggregate
- BellSouth Aggregate
- Geographic Scope
  - Region
  - State

Data Retained

Relating to CLEC Experience	Relating to BellSouth Performance
• Report Month • Invoice Type - UNE - Resale - Interconnection • Invoice Transmission Count • Date of Scheduled Bill Close	• Report Month • Invoice Type - CRIS - CABS • Invoice Transmission Count • Date of Scheduled Bill Close

SQM Disaggregation - Analog/Benchmark

SQM Level of Disaggregation	SQM Analog/Benchmark
Product/Invoice Type • Resale • UNE • Interconnection	• CRIS-based invoices will be released for delivery within six (6) business days. • CABS-based invoices will be released for delivery within eight (8) calendar days. • CLEC Average Delivery Intervals for both CRIS and CABS Invoices are comparable to BellSouth Average delivery for both systems.

SEEM Measure

SEEM Measure		
Yes	Tier I	X
	Tier II	X

SEEM Disaggregation - Analog/Benchmark

SEEM Disaggregation	SEEM Analog/Benchmark
• CLEC State - CRIS - CABS • BellSouth Region	• Parity with Retail

B3: Usage Data Delivery Accuracy

Definition

This measurement captures the percentage of recorded usage that is delivered error free and in an acceptable format to the appropriate Competitive Local Exchange Carrier (CLEC). These percentages will provide the necessary data for use as a comparative measurement for BellSouth performance. This measurement captures Data Delivery Accuracy rather than the accuracy of the individual usage recording.

Exclusions

None

Business Rules

The accuracy of the data delivery of usage records delivered by BellSouth to the CLEC must enable them to provide a degree of accuracy comparative to BellSouth bills rendered to their retail customers. If errors are detected in the delivery process, they are investigated, evaluated and documented. Errors are corrected and the data retransmitted to the CLEC.

Calculation

Usage Data Delivery Accuracy = (a - b) / a X 100

- a = Total number of usage data packs sent during current month
- b = Total number of usage data packs requiring retransmission during current month

Report Structure

- CLEC Specific
- CLEC Aggregate
- BellSouth Aggregate
- Geographic Scope
  - Region

Data Retained

Relating to CLEC Experience	Relating to BellSouth Performance
• Report Month • Record Type - BellSouth Recorded - Non-BellSouth Recorded	• Report Month • Record Type

SQM Disaggregation - Analog/Benchmark

SQM Level of Disaggregation	SQM Analog/Benchmark
• Region	• CLEC Usage Data Delivery Accuracy is comparable to BellSouth Usage Data Delivery Accuracy

SEEM Measure

SEEM Measure		
Yes	Tier I	X
	Tier II	X

SEEM Disaggregation - Analog/Benchmark

SEEM Disaggregation	SEEM Analog/Benchmark
• CLEC State • BellSouth Region	• Parity With Retail

B4: Usage Data Delivery Completeness

Definition

This measurement provides percentage of complete and accurately recorded usage data (usage recorded by BellSouth and usage recorded by other companies and sent to BellSouth for billing) that is processed and transmitted to the CLEC within thirty (30) days of the message recording date. A parity measure is also provided showing completeness of BellSouth messages processed and transmitted via CMDS. BellSouth delivers its own retail usage from recording location to billing location via CMDS as well as delivering billing data to other companies. Timeliness, Completeness and Mean Time to Deliver Usage measures are reported on the same report.

Exclusions

None

Business Rules

The purpose of these measurements is to demonstrate the level of quality of usage data delivered to the appropriate CLEC. Method of delivery is at the option of the CLEC.

Calculation

Usage Data Delivery Completeness = (a / b) X 100

- a = Total number of Recorded usage records delivered during current month that are within thirty (30) days of the message recording date
- b = Total number of Recorded usage records delivered during the current month

Report Structure

- CLEC Specific
- CLEC Aggregate
- BellSouth Aggregate
- Region

Data Retained

Relating to CLEC Experience	Relating to BellSouth Performance
• Report Month • Record Type - BellSouth Recorded - Non-BellSouth Recorded	• Report Month • Record Type

SQM Disaggregation - Analog/Benchmark

SQM Level of Disaggregation	SQM Analog/Benchmark
• Region	• CLEC Usage Data Delivery Completeness is comparable to BellSouth Usage Data Delivery Completeness

SEEM Measure

SEEM Measure		
No	Tier I	
	Tier II	

SEEM Disaggregation - Analog/Benchmark

SEEM Disaggregation	SEEM Analog/Benchmark
• Not Applicable	• Not Applicable

B5: Usage Data Delivery Timeliness

Definition

This measurement provides a percentage of recorded usage data (usage recorded by BellSouth and usage recorded by other companies and sent to BellSouth for billing) that is delivered to the appropriate CLEC within six (6) calendar days from the receipt of the initial recording. A parity measure is also provided showing timeliness of BellSouth messages processed and transmitted via CMDS. Timeliness, Completeness and Mean Time to Deliver Usage measures are reported on the same report.

Exclusions

None

Business Rules

The purpose of this measurement is to demonstrate the level of timeliness for processing and transmission of usage data delivered to the appropriate CLEC. The usage data will be mechanically transmitted or mailed to the CLEC data processing center once daily. The Timeliness interval of usage recorded by other companies is measured from the date BellSouth receives the records to the date BellSouth distributes to the CLEC. Method of delivery is at the option of the CLEC.

Calculation

Usage Data Delivery Timeliness Current month = (a / b) X 100

- a = Total number of usage records sent within six (6) calendar days from initial recording/receipt
- b = Total number of usage records sent

Report Structure

- CLEC Aggregate
- CLEC Specific
- BellSouth Aggregate
- Region

Data Retained

Relating to CLEC Experience	Relating to BellSouth Performance
• Report Month • Record Type - BellSouth Recorded - Non-BellSouth Recorded	• Report Month • Record Type

SQM Disaggregation - Analog/Benchmark

SQM Level of Disaggregation	SQM Analog/Benchmark
• Region	• CLEC Usage Data Delivery Timeliness is comparable to BellSouth Usage Data Delivery Timeliness

SEEM Measure

SEEM Measure		
No	Tier I	
	Tier II	

SEEM Disaggregation - Analog/Benchmark

SEEM Disaggregation	SEEM Analog/Benchmark
• Not Applicable	• Not Applicable

B6: Mean Time to Deliver Usage

Definition

This measurement provides the average time it takes to deliver Usage Records to a CLEC. A parity measure is also provided showing timeliness of BellSouth messages processed and transmitted via CMDS. Timeliness, Completeness and Mean Time to Deliver Usage measures are reported on the same report.

Exclusions

None

Business Rules

The purpose of this measurement is to demonstrate the average number of days it takes BellSouth to deliver Usage data to the appropriate CLEC. Usage data is mechanically transmitted or mailed to the CLEC data processing center once daily. Method of delivery is at the option of the CLEC.

Calculation

Mean Time to Deliver Usage = (a X b) / c

- a = Volume of Records Delivered
- b = Estimated number of days to deliver
- c = Total Record Volume Delivered

Note: Any usage record falling in the 30+ day interval will be added using an average figure of 31.5 days.

Report Structure

- CLEC Aggregate
- CLEC Specific
- BellSouth Aggregate
- Region

Data Retained

Relating to CLEC Experience	Relating to BellSouth Performance
• Report Month • Record Type - BellSouth Recorded - Non-BellSouth Recorded	• Report Month • Record Type

SQM Disaggregation - Analog/Benchmark

SQM Level of Disaggregation	SQM Analog/Benchmark
• Region	• Mean Time to Deliver Usage to CLEC is comparable to Mean Time to Deliver Usage to BellSouth.

SEEM Measure

SEEM Measure		
No	Tier I	
	Tier II	

SEEM Disaggregation - Analog/Benchmark

SEEM Disaggregation	SEEM Analog/Benchmark
• Not Applicable	• Not Applicable

B7: Recurring Charge Completeness

Definition

This measure captures percentage of fractional recurring charges appearing on the correct bill.

Exclusions

None

Business Rules

The effective date of the recurring charge must be within 30 days of the bill date for the charge to appear on the correct bill.

Calculation

Recurring Charge Completeness = (a / b) X 100

- a = Count of fractional recurring charges that are on the correct bill[1]
- b = Total count of fractional recurring charges that are on the correct bill

[1]Correct bill = next available bill

Report Structure

- CLEC Specific
- CLEC Aggregate
- BellSouth Aggregate

Data Retained

Relating to CLEC Experience	Relating to BellSouth Performance
• Report Month • Invoice Type • Total Recurring Charges Billed • Total Billed on Time	• Report Month • Retail Analog • Total Recurring Charges Billed • Total Billed on Time

SQM Disaggregation - Analog/Benchmark

SQM Level of Disaggregation	SQM Analog/Benchmark
Product/Invoice Type	
• Resale	• Parity
• UNE	• Benchmark 90%
• Interconnection	• Benchmark 90%

SEEM Measure

SEEM Measure		
No	Tier I	
	Tier II	

SEEM Disaggregation - Analog/Benchmark

SEEM Disaggregation	SEEM Analog/Benchmark
• Not Applicable	• Not Applicable

B8: Non-Recurring Charge Completeness

Definition

This measure captures percentage of non-recurring charges appearing on the correct bill.

Exclusions

None

Business Rules

The effective date of the non-recurring charge must be within 30 days of the bill date for the charge to appear on the correct bill.

Calculation

Non-Recurring Charge Completeness = (a / b) X 100

- a = Count of non-recurring charges that are on the correct bill[1]
- b = Total count of non-recurring charges that are on the correct bill

[1]Correct bill = next available bill

Report Structure

- CLEC Specific
- CLEC Aggregate
- BellSouth Aggregate

Data Retained

Relating to CLEC Experience	Relating to BellSouth Performance
• Report Month • Invoice Type • Total Non-recurring Charges Billed • Total Billed on Time	• Report Month • Retail Analog • Total Non-recurring Charges Billed • Total Billed on Time

SQM Disaggregation - Analog/Benchmark

SQM Level of Disaggregation	SQM Analog/Benchmark
Product/Invoice Type	
• Resale	• Parity
• UNE	• Benchmark 90%
• Interconnection	• Benchmark 90%

SEEM Measure

SEEM Measure		
No	Tier I	
	Tier II	

SEEM Disaggregation - Analog/Benchmark

SEEM Disaggregation	SEEM Analog/Benchmark
• Not Applicable	• Not Applicable

Section 6: Operator Services And Directory Assistance

OS-1: Speed to Answer Performance/Average Speed to Answer - Toll

Definition

Measurement of the average time in seconds calls wait before answered by a toll operator.

Exclusions

None

Business Rules

The clock starts when the customer enters the queue and the clock stops when a BellSouth representative answers the call or the customer abandons the call. The length of each call is determined by measuring, using a scanning technique, and accumulating the elapsed time from the entry of a customer call into the BellSouth call management system queue until the customer call is abandoned or transferred to BellSouth personnel assigned to handle calls for assistance. The system makes no distinction between CLEC customers and BellSouth customers.

Calculation

Speed to Answer Performance/Average Speed to Answer - Toll = a / b

- a = Total queue time
- b = Total calls answered

Note: Total queue time includes time that answered calls wait in queue as well as time abandoned calls wait in queue prior to abandonment.

Report Structure

- Reported for the aggregate of BellSouth and CLECs
  - State

Data Retained (on Aggregate Basis)

- For the items below, BellSouth's Performance Measurement Analysis Platform (PMAP) receives a final computation; therefore, no raw data file is available in PMAP
- Month
- Call Type (Toll)
- Average Speed of Answer

SQM Disaggregation - Analog/Benchmark

SQM Level of Disaggregation	SQM Analog/Benchmark
• None	• Parity by Design

SEEM Measure

SEEM Measure		
No	Tier I	
	Tier II	

SEEM Disaggregation - Analog/Benchmark

SEEM Disaggregation	SEEM Analog/Benchmark
• Not Applicable	• Not Applicable

OS-2: Speed to Answer Performance/Percent Answered with “X” Seconds - Toll

Definition

Measurement of the percent of toll calls that are answered in less than ten seconds.

Exclusions

None

Business Rules

The clock starts when the customer enters the queue and the clock stops when a BellSouth representative answers the call or the customer abandons the call. The length of each call is determined by measuring, using a scanning technique, and accumulating the elapsed time from the entry of a customer call into the BellSouth call management system queue until the customer call is abandoned or transferred to BellSouth personnel assigned to handle calls for assistance. The system makes no distinction between CLEC customers and BellSouth customers.

Calculation

The Percent Answered within “X” Seconds measurement for toll is derived by using the BellCore Statistical Answer Conversion Tables, to convert the Average Speed to Answer measure into a percent of calls answered within “X” seconds. The BellCore Conversion Tables are specific to the defined parameters of work time, number of operators, max queue size and call abandonment rates.

Report Structure

- Reported for the aggregate of BellSouth and CLECs
  - State

Data Retained (on Aggregate Basis)

- For the items below, BellSouth’s Performance Measurement Analysis Platform (PMAP) receives a final computation; therefore, no raw data file is available in PMAP
- Month
- Call Type (Toll)
- Average Speed of Answer

SQM Disaggregation - Analog/Benchmark

SQM Level of Disaggregation	SQM Analog/Benchmark
• None	• Parity by Design

SEEM Measure

SEEM Measure		
No	Tier I	
	Tier II	

SEEM Disaggregation - Analog/Benchmark

SEEM Disaggregation	SEEM Analog/Benchmark
• Not Applicable	• Not Applicable

DA-1: Speed to Answer Performance/Average Speed to Answer - Directory Assistance (DA)

Definition

Measurement of the average time in seconds calls wait before answered by a DA operator.

Exclusions

None

Business Rules

The clock starts when the customer enters the queue and the clock stops when a BellSouth representative answers the call or the customer abandons the call. The length of each call is determined by measuring, using a scanning technique, and accumulating the elapsed time from the entry of a customer call into the BellSouth call management system queue until the customer call is abandoned or transferred to BellSouth personnel assigned to handle calls for assistance. The system makes no distinction between CLEC customers and BellSouth customers.

Calculation

Speed to Answer Performance/Average Speed to Answer – Directory Assistance (DA) = a / b

- a = Total queue time
- b = Total calls answered

Note: Total queue time includes time that answered calls wait in queue as well as time abandoned calls wait in queue prior to abandonment.

Report Structure

- Reported for the aggregate of BellSouth and CLECs
  - State

Data Retained (on Aggregate Basis)

- For the items below, BellSouth's Performance Measurement Analysis Platform (PMAP) receives a final computation; therefore, no raw data file is available in PMAP
- Month
- Call Type (DA)
- Average Speed of Answer

SQM Disaggregation - Analog/Benchmark

SQM Level of Disaggregation	SQM Analog/Benchmark
• None	• Parity by Design

SEEM Measure

SEEM Measure		
No	Tier I	
	Tier II	

SEEM Disaggregation - Analog/Benchmark

SEEM Disaggregation	SEEM Analog/Benchmark
• Not Applicable	• Not Applicable

DA-2: Speed to Answer Performance/Percent Answered within "X" Seconds - Directory Assistance (DA)

Definition

Measurement of the percent of DA calls that are answered in less than twelve seconds.

Exclusions

None

Business Rules

The clock starts when the customer enters the queue and the clock stops when a BellSouth representative answers the call or the customer abandons the call. The length of each call is determined by measuring, using a scanning technique, and accumulating the elapsed time from the entry of a customer call into the BellSouth call management system queue until the customer call is abandoned or transferred to BellSouth personnel assigned to handle calls for assistance. The system makes no distinction between CLEC customers and BellSouth customers.

Calculation

The Percent Answered within "X" Seconds measurement for DA is derived by using the BellCore Statistical Answer Conversion Tables, to convert the Average Speed to Answer measure into a percent of calls answered within "X" seconds. The BellCore Conversion Tables are specific to the defined parameters of work time, number of operators, max queue size and call abandonment rates.

Report Structure

- Reported for the aggregate of BellSouth and CLECs
  - State

Data Retained (on Aggregate Basis)

- For the items below, BellSouth's Performance Measurement Analysis Platform (PMAP) receives a final computation; therefore, no raw data file is available in PMAP.
- Month
- Call Type (DA)
- Average Speed of Answer

SQM Disaggregation - Analog/Benchmark

SQM Level of Disaggregation	SQM Analog/Benchmark
• None	• Parity by Design

SEEM Measure

SEEM Measure		
No	Tier I	
	Tier II	

SEEM Disaggregation - Analog/Benchmark

SEEM Disaggregation	SEEM Analog/Benchmark
• Not Applicable	• Not Applicable

Section 7: Database Update Information

D-1: Average Database Update Interval

Definition

This report measures the interval from receipt of the database change request to the completion of the update to the database for Line Information Database (LIDB), Directory Assistance and Directory Listings. For E-911, see Section 8.

Exclusions

- Updates Canceled by the CLEC
- Initial update when supplemented by CLEC
- BellSouth updates associated with internal or administrative use of local services

Business Rules

The interval for this measure begins with the date and time stamp when a service order is completed and the completion notice is released to all systems to be updated with the order information including Directory Assistance, Directory Listings, and Line Information Database (LIDB). The end time stamp is the date and time of completion of updates to the system.

For BellSouth Results:

The BellSouth computation is identical to that for the CLEC with the clarifications noted below.

Other Clarifications and Qualification:

- For LIDB, the elapsed time for a BellSouth update is measured from the point in time when the BellSouth file maintenance process makes the LIDB update information available until the date and time reported by BellSouth that database updates are completed.
- Results for the CLECs are captured and reported at the update level by Reporting Dimension (see below).
- The Completion Date is the date upon which BellSouth issues the Update Completion Notice to the CLEC.
- If the CLEC initiates a supplement to the originally submitted update and the supplement reflects changes in customer requirements (rather than responding to BellSouth initiated changes), then the update submission date and time will be the date and time of BellSouth receipt of a syntactically correct update supplement. Update activities responding to BellSouth initiated changes will not result in changes to the update submission date and time used for the purposes of computing the update completion interval.
- Elapsed time is measured in hours and hundredths of hours rounded to the nearest tenth of an hour.
- Because this should be a highly automated process, the accumulation of elapsed time continues through off-schedule, weekends and holidays; however, scheduled maintenance windows are excluded.

Calculation

Update Interval = (a - b)

- a = Completion Date & Time of Database Update
- b = Submission Date and Time of Database Change

Average Update Interval = (c / d)

- c = Sum of all Update Intervals
- d = Total Number of Updates Completed During Reporting Period

Report Structure

- CLEC Specific (Under development)
- CLEC Aggregate
- BellSouth Aggregate

Data Retained

Relating to CLEC Experience	Relating to BellSouth Performance
• Database File Submission Time • Database File Update Completion Time • CLEC Number of Submissions • Total Number of Updates	• Database File Submission Time • Database File Update Completion Time • BellSouth Number of Submissions • Total Number of Updates

SQM Disaggregation - Analog/Benchmark

SQM Level of Disaggregation:	SQM Analog/Benchmark:
Database Type • LIDB • Directory Listings • Directory Assistance	• Parity by Design

SEEM Measure

SEEM Measure		
No	Tier I	
	Tier II	

SEEM Disaggregation - Analog/Benchmark

SEEM Disaggregation	SEEM Analog/Benchmark
• Not Applicable	• Not Applicable

D-2: Percent Database Update Accuracy

Definition

This report measures the accuracy of database updates by BellSouth for Line Information Database (LIDB), Directory Assistance, and Directory Listings using a statistically valid sample of LSRs/Orders in a manual review. This manual review is not conducted on BellSouth Retail Orders.

Exclusions

- Updates canceled by the CLEC
- Initial update when supplemented by CLEC
- CLEC orders that had CLEC errors
- BellSouth updates associated with internal or administrative use of local services

Business Rules

For each update completed during the reporting period, the original update that the CLEC sent to BellSouth is compared to the database following completion of the update by BellSouth. An update is "completed without error" if the database completely and accurately reflects the activity specified on the original and supplemental update (order) submitted by the CLEC. Each database (LIDB, Directory Assistance, and Directory Listings) should be separately tracked and reported.

A statistically valid sample of CLEC Orders are pulled each month. That sample will be used to test the accuracy of the database update process. This is a manual process.

Calculation

Percent Update Accuracy = (a / b) X 100

- a = Number of Updates Completed Without Error
- b = Number Updates Completed

Report Structure

- CLEC Aggregate
- CLEC Specific (not available in this report)
- BellSouth Aggregate (not available in this report)

Data Retained

Relating to CLEC Experience	Relating to BellSouth Performance
• Report Month • CLEC Order Number (so_nbr) and PON (PON) • Local Service Request (LSR) • Order Submission Date • Number of Orders Reviewed **Note**: Code in parentheses is the corresponding header found in the raw data file.	• Not Applicable

SQM Disaggregation - Analog/Benchmark

SQM Level of Disaggregation	SQM Analog/Benchmark
Database Type • LIDB • Directory Assistance • Directory Listings	• 95% Accurate

SEEM Measure

SEEM Measure		
No	Tier I	
	Tier II	

SEEM Disaggregation - Analog/Benchmark

SEEM Disaggregation	SEEM Analog/Benchmark
• Not Applicable	• Not Applicable

D-3: Percent NXXs and LRNs Loaded by the LERG Effective Date

Definition

Measurement of the percent of NXX(s) and Location Routing Numbers LRN(s) loaded in end office and/or tandem switches by the Local Exchange Routing Guide (LERG) effective date when facilities are in place. BellSouth has a single provisioning process for both NXX(s) and LRN(s). In this measure, BellSouth will identify whether or not a particular NXX has been flagged as LNP capable (set triggers for dips) by the LERG effective date.

An LRN is assigned by the owner of the switch and is placed into the software translations for every switch to be used as an administrative pointer to route NXX(s) in LNP capable switches. The LRN is a result of Local Number Porting and is housed in a national database provided by the Number Portability Administration Center (NPAC). The switch owner is responsible for notifying NPAC and requesting the effective date that will be reflected in the LERG. The national database downloads routing tables into BellSouth Service Control Point (SCP) regional databases, which are queried by switches when routing ported numbers.

The basic NXX routing process includes the addition of all NXX(s) in the response translations. This addition to response translations is what supports LRN routing. Routing instructions for all NXX(s), including LRN(s), are received from the Advance Routing & Trunking System (ARTS) and all routing, including response, is established based on the information contained in the Translation Work Instructions (TWINs) document.

Exclusions

- Activation requests where the CLEC's interconnection arrangements and facilities are not in place by the LERG effective date
- Expedite requests

Business Rules

Data for the initial NXX(s) and LRN(s) in a local calling area will be based on the LERG effective date or completion of the initial interconnection trunk group(s), whichever is longer. Data for additional NXX(s) in the local calling area will be based on the LERG effective date. The LERG effective date is loaded into the system at the request of the CLEC. It is contingent upon the CLEC to engineer, order, and install interconnection arrangements and facilities prior to that date.

The total Count of NXX(s) and LRN(s) that were scheduled to be loaded and those that were loaded by the LERG effective date in BellSouth switches will be captured in the Work Force Administration -Dispatch In database.

Calculation

Percent NXXs/LRNs Loaded and Tested Prior to the LERG Effective Date = (a / b) X 100

- a = Count of NXXs and LRNs loaded by the LERG effective date
- b = Total NXXs and LRNs scheduled to be loaded by the LERG effective date

Report Structure

- CLEC Specific
- CLEC Aggregate
- BellSouth (Not Applicable)

Data Retained

Relating to CLEC Experience	Relating to BellSouth Performance
• Company Name • Company Code • NPA/NXX • LERG Effective Date • Loaded Date	• Not Applicable

SQM Disaggregation - Analog/Benchmark

SQM Level of Disaggregation	SQM Analog/Benchmark
• Geographic Scope - Region	• 100% by LERG Effective Date

SEEM Measure

SEEM Measure		
No	Tier I	
	Tier II	

SEEM Disaggregation - Analog/Benchmark

SEEM Disaggregation	SEEM Analog/Benchmark
• Not Applicable	• Not Applicable

Section 8: E911

E-1: Timeliness

Definition

Measures the percent of batch orders for E911 database updates (to CLEC resale and BellSouth retail records) processed successfully within a 24-hour period.

Exclusions

- Any resale order canceled by a CLEC
- Facilities-based CLEC orders

Business Rules

The 24-hour processing period is calculated based on the date and time processing starts on the batch orders and the date and time processing stops on the batch orders. Mechanical processing starts when SCC (the BellSouth E911 vendor) receives E911 files containing batch orders extracted from the BellSouth Service Order Control System (SOCS). Processing stops when SCC loads the individual records to the E911 database. The E911 database includes updates to the Automatic Location Identification (ALI) database. The system makes no distinction between CLEC resale records and BellSouth retail records.

Calculation

E911 Timeliness = (a / b) X 100

- a = Number of batch orders processed within 24 hours
- b = Total number of batch orders submitted

Report Structure

Reported for the aggregate of CLEC resale updates and BellSouth retail updates

- State
- Region

Data Retained

- Report month
- Aggregate data

SQM Disaggregation - Analog/Benchmark

SQM Level of Disaggregation	SQM Analog/Benchmark
• None	• Parity by Design

SEEM Measure

SEEM Measure		
No	Tier I	
	Tier II	

SEEM Disaggregation - Analog/Benchmark

SEEM Disaggregation	SEEM Analog/Benchmark
• Not Applicable	• Not Applicable

E-2: Accuracy

Definition

Measures the percent of E911 telephone number (TN) record updates (to CLEC resale and BellSouth retail records) processed successfully for E911 (including the Automatic Location Identification (ALI) database).

Exclusions

- Any resale order canceled by a CLEC
- Facilities-based CLEC orders

Business Rules

Accuracy is based on the number of records processed without error at the conclusion of the processing cycle. Mechanical processing starts when SCC (the BellSouth E911 vendor) receives E911 files containing telephone number (TN) records extracted from BellSouth's Service Order Control System (SOCS). The system makes no distinction between CLEC resale records and BellSouth retail records.

Calculation

E911 Accuracy = (a / b) X 100

- a = Number of record individual updates processed with no errors
- b = Total number of individual record updates

Report Structure

Reported for the aggregate of CLEC resale updates and BellSouth retail updates

- State
- Region

Data Retained

- Report month
- Aggregate data

SQM Disaggregation - Analog/Benchmark

SQM Level of Disaggregation	SQM Analog/Benchmark
• None	• Parity by Design

SEEM Measure

SEEM Measure		
No	Tier I	
	Tier II	

SEEM Disaggregation - Analog/Benchmark

SEEM Disaggregation	SEEM Analog/Benchmark
• Not Applicable	• Not Applicable

E-3: Mean Interval

Definition

Measures the mean interval processing of E911 batch orders (to update CLEC resale and BellSouth retail records) including processing against the Automatic Location Identification (ALI) database.

Exclusions

- Any resale order canceled by a CLEC
- Facilities-based CLEC orders

Business Rules

The processing period is calculated based on the date and time processing starts on the batch orders and the date and time processing stops on the batch orders. Data is posted is 4-hour increments up to and beyond 24 hours. The system makes no distinction between CLEC resale records and BellSouth retail records.

Calculation

E911 Interval = (a - b)

- a = Date and time of batch order completion
- b = Date and time of batch order submission

E911 Mean Interval = (c / d)

- c = Sum of all E911 Intervals
- d = Number of batch orders completed

Report Structure

Reported for the aggregate of CLEC resale updates and BellSouth retail updates

- State
- Region

Data Retained

- Report month
- Aggregate data

SQM Disaggregation - Analog/Benchmark

SQM Level of Disaggregation	SQM Analog/Benchmark
• None	• Parity by Design

SEEM Measure

SEEM Measure		
No	Tier I	
	Tier II	

SEEM Disaggregation - Analog/Benchmark

SEEM Disaggregation	SEEM Analog/Benchmark
• Not Applicable	• Not Applicable

Section 9: Trunk Group Performance

TGP-1: Trunk Group Performance-Aggregate

Definition

The Trunk Group Performance report displays, over a reporting cycle, aggregate, average trunk group blocking data for each hour of each day of the reporting cycle, for both CLEC affecting and BellSouth affecting trunk groups.

Exclusions

- Trunk groups for which valid data is not available for an entire study period
- Duplicate trunk group information
- Trunk groups blocked due to CLEC network/equipment failure
- Trunk groups blocked due to CLEC delayed or refused orders
- Trunk groups blocked due to unanticipated significant increases in CLEC traffic
- Final groups actually overflowing, not blocked

Business Rules

The purpose of the Trunk Group Performance Report is to provide trunk blocking measurements on CLEC and BellSouth trunk groups for comparison only. It is not the intent of the report that it be used for network management and/or engineering.

Monthly Average Blocking:

- The reporting cycle includes both business and non-business days in a calendar month.
- Monthly average blocking values are calculated for each trunk group for each of the 24 time consistent hours across a reporting cycle.

Aggregate Monthly Blocking:

- Used to compare aggregate blocking across trunk groups which terminate traffic at CLEC points of presence versus BellSouth switches.
- Aggregate monthly blocking data is calculated for each hour of the day across all trunk groups assigned to a category.

Trunk Categorization:

This report displays, over a reporting cycle, aggregate, average blocking data for each hour of a day. Therefore, for each reporting cycle, 24 blocking data points are generated for two aggregate groups of selected trunk groups. These groups are CLEC affecting and BellSouth affecting trunk groups. In order to assign trunk groups to each aggregate group, all trunk groups are first assigned to a category. A trunk group's end points and the type of traffic that is transmitted on it define a category. Selected categories of trunk groups are assigned to the aggregate groups so that trunk reports can be generated. The categories to which trunk groups have been assigned for this report are as follows.

CLEC Affecting Categories:

	Point A	Point B
Category 1:	BellSouth End Office	BellSouth Access Tandem
Category 3:	BellSouth End Office	CLEC Switch
Category 4:	BellSouth Local Tandem	CLEC Switch
Category 5:	BellSouth Access Tandem	CLEC Switch
Category 10:	BellSouth End Office	BellSouth Local Tandem
Category 16:	BellSouth Tandem	BellSouth Tandem

BellSouth Affecting Categories:

	Point A	Point B
Category 9:	BellSouth End Office	BellSouth End Office

Calculation

Monthly Average Blocking:

- For each hour of the day, each day's raw data are summed across all valid measurements days in a report cycle for blocked and attempted calls.

- The sum of the blocked calls is divided by the total number of calls attempted in a reporting period.

Aggregate Monthly Blocking:

- For each hour of the day, the monthly sums of the blocked and attempted calls from each trunk group are separately aggregated over all trunk groups within each assigned category.
- The total blocked calls is divided by the total call attempts within a group to calculate an aggregate monthly blocking for each assigned group.
- The result is an aggregate monthly average blocking value for each of the 24 hours by group.
- The difference between the CLEC and BellSouth affecting trunk groups are also calculated for each hour.

Report Structure

- CLEC Aggregate
- BellSouth Aggregate
  - State

Data Retained

Relating to CLEC Experience	Relating to BellSouth Performance
• Report Month • Total Trunk Groups • Number of Trunk Groups by CLEC • Hourly Blocking Per Trunk Group • Hourly Usage Per Trunk Group • Hourly Call Attempts Per Trunk Group	• Report Month • Total Trunk Groups • Aggregate Hourly Blocking Per Trunk Group • Hourly Usage Per Trunk Group • Hourly Call Attempts Per Trunk Group

SQM Disaggregation - Analog/Benchmark

SQM Level of Disaggregation	SQM Analog/Benchmark
• CLEC aggregate • BellSouth aggregate	• Any 2 hour period in 24 hours where CLEC blockage exceeds BellSouth blockage by more than 0.5% using trunk groups 1, 3, 4, 5, 10, 16 for CLECs and 9 for BellSouth

SEEM Measure

SEEM Measure		
Yes	Tier I	
	Tier II	X

SEEM Disaggregation - Analog/Benchmark

SEEM Disaggregation	SEEM Analog/Benchmark
• CLEC Aggregate • BellSouth Aggregate	• Any 2 hour period in 24 hours where CLEC blockage exceeds BellSouth blockage by more than 0.5% using trunk groups 1,3,4,5,10,16 for CLECs and 9 for BellSouth

TGP-2: Trunk Group Performance-CLEC Specific

Definition

The Trunk Group Performance report displays, over a reporting cycle, aggregate, average trunk group blocking data for each hour of each day of the reporting cycle, for both CLEC affecting and BellSouth affecting trunk groups.

Exclusions

- Trunk Groups for which valid data is not available for an entire study period
- Duplicate trunk group information
- Trunk groups blocked due to CLEC network/equipment failure
- Trunk groups blocked due to CLEC delayed or refused orders
- Trunk groups blocked due to unanticipated significant increases in CLEC traffic
- Final groups actually overflowing, not blocked

Business Rules

The purpose of the Trunk Group Performance Report is to provide trunk blocking measurements on CLEC and BellSouth trunk groups for comparison only. It is not the intent of the report that it be used for network management and/or engineering.

Monthly Average Blocking:

- The reporting cycle includes both business and non-business days in a calendar month.
- Monthly average blocking values are calculated for each trunk group for each of the 24 time consistent hours across a reporting cycle.

Aggregate Monthly Blocking:

- Used to compare aggregate blocking across trunk groups which terminate traffic at CLEC points of presence versus BellSouth switches.
- Aggregate monthly blocking data is calculated for each hour of the day across all trunk groups assigned to a category.

Trunk Categorization:

- This report displays, over a reporting cycle, aggregate, average blocking data for each hour of a day. Therefore, for each reporting cycle, 24 blocking data points are generated for two aggregate groups of selected trunk groups. These groups are CLEC affecting and BellSouth affecting trunk groups. In order to assign trunk groups to each aggregate group, all trunk groups are first assigned to a category. A trunk group's end points and the type of traffic that is transmitted on it define a category. Selected categories of trunk groups are assigned to the aggregate groups so that trunk reports can be generated. The categories to which trunk groups have been assigned for this report are as follows.

CLEC Affecting Categories:

	Point A	Point B
Category 1:	BellSouth End Office	BellSouth Access Tandem
Category 3:	BellSouth End Office	CLEC Switch
Category 4:	BellSouth Local Tandem	CLEC Switch
Category 5:	BellSouth Access Tandem	CLEC Switch
Category 10:	BellSouth End Office	BellSouth Local Tandem
Category 16:	BellSouth Tandem	BellSouth Tandem

BellSouth Affecting Categories:

	Point A	Point B
Category 9:	BellSouth End Office	BellSouth End Office

Calculation

Monthly Average Blocking:

- For each hour of the day, each day's raw data are summed across all valid measurements days in a report cycle for blocked and attempted calls.
- The sum of the blocked calls is divided by the total number of calls attempted in a reporting period.

Aggregate Monthly Blocking:

- For each hour of the day, the monthly sums of the blocked and attempted calls from each trunk group are separately aggregated over all trunk groups within each assigned category.
- The total blocked calls is divided by the total call attempts within a group to calculate an aggregate monthly blocking for each assigned group.
- The result is an aggregate monthly average blocking value for each of the 24 hours by group.
- The difference between the CLEC and BellSouth affecting trunk groups are also calculated for each hour.

Report Structure

- CLEC Specific
  - State

Data Retained

Relating to CLEC Experience	Relating to BellSouth Performance
• Report Month • Total Trunk Groups • Number of Trunk Groups by CLEC • Hourly Blocking Per Trunk Group • Hourly Usage Per Trunk Group • Hourly Call Attempts Per Trunk Group	• Report Month • Total Trunk Groups • Aggregate Hourly Blocking Per Trunk Group • Hourly Usage Per Trunk Group • Hourly Call Attempts Per Trunk Group

SQM Disaggregation - Analog/Benchmark

SQM Level of Disaggregation	SQM Analog/Benchmark
• CLEC Trunk Group	• Any 2 hour period in 24 hours where CLEC blockage exceeds BellSouth blockage by more than 0.5% using trunk groups 1, 3, 4, 5, 10, 16 for CLECs and 9 for BellSouth

SEEM Measure

SEEM Measure		
Yes	Tier I	X
	Tier II	

SEEM Disaggregation - Analog/Benchmark

SEEM Disaggregation	SEEM Analog/Benchmark
• CLEC Trunk Group • BellSouth Trunk Group	• Any 2 hour period in 24 hours where CLEC blockage exceeds BellSouth blockage by more than 0.5% using trunk groups 1, 3, 4, 5, 10, 16 for CLECs and 9 for BellSouth

Section 10: Collocation

C-1: Collocation Average Response Time

Definition

Measures the average time (counted in calendar days) from the receipt of a complete and accurate collocation application (including receipt of application fee if required) to the date BellSouth returns a response electronically or in writing. Within 10 calendar days after having received a bona fide application for physical collocation, BellSouth must respond as to whether space is available or not.

Exclusions

Any application canceled by the CLEC.

Business Rules

The clock starts on the date that BellSouth receives a complete and accurate collocation application accompanied by the appropriate application fee if required. The clock stops on the date that BellSouth returns a response. The clock will restart upon receipt of changes to the original application request.

Calculation

Response Time = (a - b)

- a = Request Response Date
- b = Request Submission Date

Average Response Time = (c / d)

- c = Sum of all Response Times
- d = Count of Responses Returned within Reporting Period

Report Structure

- Individual CLEC (alias) Aggregate
- Aggregate of all CLECs

Data Retained

- Report Period
- Aggregate Data

SQM Disaggregation - Analog/Benchmark

Level of Disaggregation	SQM Analog/Benchmark
• State • Virtual-Initial • Virtual-Augment • Physical Caged-Initial • Physical Caged-Augment • Physical-Cageless-Initial • Physical Cageless-Augment	• Virtual - 20 Calendar Days • Physical Caged - 30 Calendar Days • Physical Cageless - 30 Calendar Days

SEEM Measure

SEEM Measure		
No	Tier I	
	Tier II	

SEEM Disaggregation - Analog/Benchmark

SEEM Disaggregation	SEEM Analog/Benchmark
• Not Applicable	• Not Applicable

C-2: Collocation Average Arrangement Time

Definition

Measures the average time (counted in calendar days) from receipt of a complete and accurate Bona Fide firm order (including receipt of appropriate fee if required) to the date BellSouth completes the collocation arrangement and notifies the CLEC.

Exclusions

- Any Bona Fide firm order canceled by the CLEC
- Any Bona Fide firm order with a CLEC-negotiated interval longer than the benchmark interval

Business Rules

The clock starts on the date that BellSouth receives a complete and accurate Bone Fide firm order accompanied by the appropriate fee. The clock stops on the date that BellSouth completes the collocation arrangement and notifies the CLEC.

Calculation

Arrangement Time = (a - b)

- a = Date Collocation Arrangement is Complete
- b = Date Order for Collocation Arrangement Submitted

Average Arrangement Time = (c / d)

- c = Sum of all Arrangement Times
- d = Total Number of Collocation Arrangements Completed during Reporting Period

Report Structure

- Individual CLEC (alias) Aggregate
- Aggregate of all CLECs

Data Retained

- Report Period
- Aggregate Data

SQM Disaggregation - Analog/Benchmark

SQM Level of Disaggregation	SQM Analog/Benchmark
• State • Virtual-Initial • Virtual-Augment • Physical Caged-Initial • Physical Caged-Augment • Physical Cageless-Initial • Physical Cageless-Augment	• Virtual - 50 Calendar Days (Ordinary) • Virtual - 75 Calendar Days (Extraordinary) • Physical Caged - 90 Calendar Days • Physical Cageless - 60 Calendar Days (Ordinary) • Physical Cageless - 90 Calendar Days (Extraordinary)

SEEM Measure

SEEM Measure		
No	Tier I	
	Tier II	

SEEM Disaggregation - Analog/Benchmark

SEEM Disaggregation	SEEM Analog/Benchmark
• Not Applicable	• Not Applicable

C-3: Collocation Percent of Due Dates Missed

Definition

Measures the percent of missed due dates for both virtual and physical collocation arrangements.

Exclusions

Any Bona Fide firm order canceled by the CLEC.

Business Rules

Percent Due Dates Missed is the percent of total collocation arrangements which BellSouth is unable to complete by end of the BellSouth committed due date. The clock starts on the date that BellSouth receives a complete and accurate Bona Fide firm order accompanied by the appropriate fee if required. The arrangement is considered a missed due date if it is not completed on or before the committed due date.

Calculation

% of Due Dates Missed = (a / b) X 100

- a = Number of Completed Orders that were not completed within BellSouth Committed Due Date during Reporting Period
- b = Number of Orders Completed in Reporting Period

Report Structure

- Individual CLEC (alias) Aggregate
- Aggregate of all CLECs

Data Retained

- Report Period
- Aggregate Data

SQM Disaggregation - Analog/Benchmark

SQM Level of Disaggregation	SQM Analog/Benchmark
• State • Virtual-Initial • Virtual-Augment • Physical Caged-Initial • Physical Caged-Augment • Physical Cageless-Initial • Physical Cageless-Augment	• >= 95% on time

SEEM Measure

SEEM Measure		
Yes	Tier I	X
	Tier II	X

SEEM Disaggregation - Analog/Benchmark

SEEM Disaggregation	SEEM Analog/Benchmark
• All Collocation Arrangements	• >= 95% on time

Section 11: Change Management

CM-1: Timeliness of Change Management Notices

Definition

Measures whether CLECs receive required software release notices on time to prepare for BellSouth interface/system changes so CLEC interfaces are not impaired by change.

Exclusions

- Changes to release dates for reasons outside BellSouth control, such as the system software vendor changes. For example: a patch to fix a software problem.
- Type 6 Change Requests (Defects/Expedites), as defined by the Change Control Process (CCP)

Business Rules

This metric is designed to measure the percent of change management notices sent to the CLECs according to notification standards and time frames set forth in the Change Control Process. The CCP is used by BellSouth and the CLECs to manage requested changes to the BellSouth Local Interfaces.

The clock starts on the notification date. The clock stops on the software release date. When project events occur (scope changes, analysis information, etc.), the software release date may change. A revised notification would be required and the clock would restart. Based on release constraints for defects/expedites, notification may be less than the agreed upon interval in the CCP for new features.

Calculation

Timeliness of Change Management Notices = (a / b) X 100

- a = Total number of Change Management Notifications Sent Within Required Timeframes
- b = Total Number of Change Management Notifications Sent

Report Structure

- BellSouth Aggregate

Data Retained

- Report Period
- Notice Date
- Release Date

SQM Disaggregation - Analog/Benchmark

SQM Level of Disaggregation	SQM Analog/Benchmark
• Region	• 95% >= 30 Days of Release

SEEM Measure

SEEM Measure		
Yes	Tier I	
	Tier II	X

SEEM Disaggregation - Analog/Benchmark

SEEM Disaggregation	SEEM Analog/Benchmark
• Region	• 95% >= 30 Days of Release

CM-2: Change Management Notice Average Delay Days

Definition

Measures the average delay days for change management system release notices sent outside the time frame set forth in the Change Control Process.

Exclusions

- Changes to release dates for reasons outside BellSouth control, such as the system software vendor changes. For example: a patch to fix a software problem
- Type 6 Change Requests (Defects/Expedites), as defined by the Change Control Process

Business Rules

This metric is designed to measure the percent of change management notices sent to the CLECs according to notification standards and time frames set forth in the Change Control Process. The CCP is used by BellSouth and the CLECs to manage requested changes to the BellSouth Local Interfaces.

The clock starts on the notification due date. The clock stops on the software release date. When project events occur (scope changes, analysis information, etc.), the software release date may change. A revised notification would be required and the clock would restart. Based on release constraints for defects/expedites, notification may be less than the agreed upon interval in the CCP for new features.

Calculation

Change Management Notice Delay Days = (a - b)

- a = Date Notice Sent
- b = Date Notice Due

Change Management Notice Average Delay Days = (c / d)

- c = Sum of all Change Management Notice Delay Days
- d = Total Number of Notices Sent Late

Report Structure

- BellSouth Aggregate

Data Retained

- Report Period
- Notice Date
- Release Date

SQM Disaggregation - Analog/Benchmark

SQM Level of Disaggregation	SQM Analog/Benchmark
• Region	• <= 8 Days

SEEM Measure

SEEM Measure		
No	Tier I	
	Tier II	

SEEM Disaggregation - Analog/Benchmark

SEEM Disaggregation	SEEM Analog/Benchmark
• Not Applicable	• Not Applicable

CM-3: Timeliness of Documents Associated with Change

Definition

Measures whether CLECs received requirements or business rule documentation on time to prepare for BellSouth interface/system changes so CLEC interfaces are not impaired by change.

Exclusions

- Documentation for release dates that slip less than 30 days for reasons outside BellSouth control, such as changes due to Regulatory mandate or CLEC request
- Type 6 Change Requests (Defects/Expedites), as defined by the Change Control Process

Business Rules

This metric is designed to measure the percent of requirements or business rule documentation sent to the CLECs according to documentation standards and timeframes set forth in the Change Control Process. The CCP is used by BellSouth and the CLECs to manage requested changes to the BellSouth Local Interfaces.

The clock starts on the business rule documentation release date. The clock stops on the software release date. When project events occur (scope changes, analysis information, etc.), the software release date may change. Revisions to documentation could be required and the clock would restart.

Calculation

Timeliness of Documents Associated with Change = (a / b) X 100

- a = Change Management Documentation Sent Within Required Timeframes after Notices
- b = Total Number of Change Management Documentation Sent

Report Structure

- BellSouth Aggregate

Data Retained

- Report Period
- Notice Date
- Release Date

SQM Disaggregation - Analog/Benchmark

SQM Level of Disaggregation	SQM Analog/Benchmark
• Region	• 95% >= 30 days if new features coding is required • 95% >= 5 days for documentation defects, corrections or clarifications

SEEM Measure

SEEM Measure		
Yes	Tier I	
	Tier II	X

SEEM Disaggregation - Analog/Benchmark

SEEM Disaggregation	SEEM Analog/Benchmark
• Region	• 95% >= 30 days of the change

CM-4: Change Management Documentation Average Delay Days

Definition

Measures the average delay days for requirements or business rule documentation sent outside the time frames set forth in the Change Control Process.

Exclusions

- Documentation for release dates that slip less than 30 days for reasons outside BellSouth control, such as changes due to Regulatory mandate or CLEC request
- Type 6 Change Requests (Defects/Expedites), as defined by the Change Control Process

Business Rules

This metric is designed to measure the percent of requirements or business rule documentation sent to the CLECs according to documentation standards and time frames set forth in the Change Control Process. The CCP is used by BellSouth and the CLECs to manage requested changes to the BellSouth Local Interfaces.

The clock starts on the business rule documentation release date. The clock stops on the software release date. When project events occur (scope changes, analysis information, etc.), the software release date may change. Revisions to documentation could be required and the clock would restart.

Calculation

Change Management Documentation Delay Days = (a - b)

- a = Date Documentation Provided
- b = Date Documentation Due

Change Management Documentation Average Delay Days = (c / d)

- c = Sum of all CM Documentation Delay Days
- d = Total Change Management Documents Sent

Report Structure

- BellSouth Aggregate

Data Retained

- Report Period
- Notice Date
- Release Date

SQM Disaggregation - Analog/Benchmark

SQM Level of Disaggregation	SQM Analog/Benchmark
• Region	• <= 8 Days

SEEM Measure

SEEM Measure		
No	Tier I	
	Tier II	

SEEM Disaggregation - Analog/Benchmark

SEEM Disaggregation	SEEM Analog/Benchmark
• Not Applicable	• Not Applicable

CM-5: Notification of CLEC Interface Outages

Definition

Measures the time it takes BellSouth to notify the CLEC of an outage of an interface.

Exclusions

None

Business Rules

This measure is designed to notify the CLEC of interface outages within 15 minutes of BellSouth's verification that an outage has taken place. This metric will be expressed as a percentage.

Calculation

Notification of CLEC Interface Outages = (a / b) X 100

- a = Number of Interface Outages where CLECS are notified within 15 minutes
- b = Total Number of Interface Outages

Report Structure

- CLEC Aggregate

Data Retained

Relating to CLEC Experience	Relating to BellSouth Performance
• Number of Interface Outages • Number of Notifications <= 15 minutes	• Not Applicable

SQM Disaggregation - Analog/Benchmark

SQM Level of Disaggregation	SQM Analog/Benchmark
• By interface type for all interfaces accessed by CLECs	• 97% in 15 Minutes

Interface	Applicable to
EDI	CLEC
CSOTS	CLEC
LENS	CLEC
TAG	CLEC
ECTA	CLEC
TAFI	CLEC/BellSouth

SEEM Measure

SEEM Measure		
No	Tier I	
	Tier II	

SEEM Disaggregation - Analog/Benchmark

SEEM Disaggregation	SEEM Analog/Benchmark
• Not Applicable	• Not Applicable

Section 12: Bona Fide / New Business Request Process

BFR-1: Percentage of BFR/NBR Requests Processed Within 30 Business Days

Definition

Percentage of Bona Fide/New Business Requests processed within 30 business days for the development and purchases of network elements not currently offered.

Exclusions

- Any application cancelled by the CLEC

Business Rules

The clock starts when BellSouth receives a complete and accurate application. The clock stops when BellSouth completes application processing for Network Elements that are not operational at the time of the request.

Calculation

Percentage of BFR/NBR Requests Processed Within 30 Business Days = (a / b) X 100

- a = Count of number of requests processed within 30 days
- b = Total number of requests

Report Structure

- Individual CLEC (alias) Aggregate
- Aggregate of all CLECs

Data Retained

- Report Period
- Aggregate Data

SQM Disaggregation - Analog/Benchmark

SQM Level of Disaggregation	SQM Analog/Benchmark
• Region	• 90% <= 30 business days

SEEM Measure

SEEM Measure		
No	Tier I	
	Tier II	

SEEM Disaggregation - Analog/Benchmark

SEEM Disaggregation	SEEM Analog/Benchmark
• Not Applicable	• Not Applicable

BFR-2: Percentage of Quotes Provided for Authorized BFR/NBR Requests Processed Within X (10/30/60) Business Days

Definition

Percentage of quotes provided in response to Bona Fide/New Business Requests within X (10/30/60) business days for network elements not currently offered.

Exclusions

- Requests that are subject to pending arbitration

Business Rules

The clock starts when BellSouth receives a complete and accurate application. The clock stops when BellSouth responds back to the application with a price quote.

Calculation

Percentage of Quotes Provided for Authorized BFR/NBR Requests Processed Within X (10/30/60) Business Days = (a / b) X 100

- a = Count of number of requests processed within "X" days
- b = Total number of requests
  where "X" = 10, 30, or 60 days

Report Structure

- New Network Elements that are operational at the time of the request
- New Network Elements that are ordered by the FCC
- New Network Elements that are not operational at the time of the request

Data Retained

- Report Period
- Aggregate Data

SQM Disaggregation - Analog/Benchmark

SQM Level of Disaggregation	SQM Analog/Benchmark
• Region	• 90% <= 10/30/60 business days - Network Elements that are operational at the time of the request – 10 days - Network Elements that are Ordered by the FCC – 30 days - New Network Elements – 90 days

SEEM Measure

SEEM Measure		
No	Tier I	
	Tier II	

SEEM Disaggregation - Analog/Benchmark

SEEM Disaggregation	SEEM Analog/Benchmark
• Not Applicable	• Not Applicable

Appendix A: Reporting Scope

A-1: Standard Service Groupings

See individual reports in the body of the SQM.

A-2: Standard Service Order Activities

These are the generic BellSouth/CLEC service order activities which are included in the Pre-Ordering, Ordering, and Provisioning sections of this document. It is not meant to indicate specific reporting categories.

Service Order Activity Types

- Service Migrations Without Changes
- Service Migrations With Changes
- Move and Change Activities
- Service Disconnects (Unless noted otherwise)
- New Service Installations

Pre-Ordering Query Types

- Address
- Telephone Number
- Appointment Scheduling
- Customer Service Record
- Feature Availability
- Service Inquiry

Maintenance Query Types:

TAFI - TAFI queries the systems below

- CRIS
- March
- Predictor
- LMOS
  - DLR
  - DLETH
  - LMOSupd
- LNP
- NIW
- OSPCM
- SOCS

Report Levels

- CLEC RESH
- CLEC State
- CLEC Region
- Aggregate CLEC State
- Aggregate CLEC Region
- BellSouth State
- BellSouth Region

Appendix B: Glossary of Acronyms and Terms

Symbols used in calculations

∑
A mathematical symbol representing the sum of a series of values following the symbol.

-
A mathematical operator representing subtraction.

+
A mathematical operator representing addition.

/
A mathematical operator representing division.

<
A mathematical symbol that indicates the metric on the left of the symbol is less than the metric on the right.

<=
A mathematical symbol that indicates the metric on the left of the symbol is less than or equal to the metric on the right.

>
A mathematical symbol that indicates the metric on the left of the symbol is greater than the metric on the right.

>=
A mathematical symbol that indicates the metric on the left of the symbol is greater than or equal to the metric on the right.

( )
Parentheses, used to group mathematical operations which are completed before operations outside the parentheses.

A

ACD
Automatic Call Distributor - A service that provides status monitoring of agents in a call center and routes high volume incoming telephone calls to available agents while collecting management information on both callers and attendants.

Aggregate
Sum total of all items in like category, e.g. CLEC aggregate equals the sum total of all CLECs' data for a given reporting level.

ALEC
Alternative Local Exchange Company = FL CLEC

ADSL
Asymmetrical Digital Subscriber Line

ASR
Access Service Request - A request for access service terminating delivery of carrier traffic into a Local Exchange Carrier's network.

ATLAS
Application for Telephone Number Load Administration System - The BellSouth Operations System used to administer the pool of available telephone numbers and to reserve selected numbers from the pool for use on pending service requests/service orders.

ATLASTN
ATLAS software contract for Telephone Number.

Auto Clarification
The number of LSRs that were electronically rejected from LESOG and electronically returned to the CLEC for correction.

B

BFR:
Bona Fide Request

BILLING
The process and functions by which billing data is collected and by which account information is processed in order to render accurate and timely billing.

BOCRIS
Business Office Customer Record Information System (Front-end to the CRIS database.)

BRI
Basic Rate ISDN

BRC
Business Repair Center – The BellSouth Business Systems trouble receipt center which serves business and CLEC customers.

BellSouth
BellSouth Telecommunications, Inc.

C

CABS
Carrier Access Billing System

CCC
Coordinated Customer Conversions

CCP
Change Control Process

Centrex
A business telephone service, offered by local exchange carriers, which is similar to a Private Branch Exchange (PBX) but the switching equipment is located in the telephone company Central Office (CO).

CKTID
A unique identifier for elements combined in a service configuration

CLEC
Competitive Local Exchange Carrier

CLP
Competitive Local Provider = NC CLEC

CM
Change Management

CMDS
Centralized Message Distribution System - Telcordia administered national system used to transfer specially formatted messages among companies.

COFFI
Central Office Feature File Interface - Provides information about USOCs and class of service. COFFI is a part of DOE/ SONGS. It indicates all services available to a customer.

COG
Corporate Gateway - Telcordia product designed for the electronic submission of xDSL Local Service Requests.

CRIS

Customer Record Information System - The BellSouth proprietary corporate database and billing system for non-access customers and services.

CRSACCTS
CRIS software contract for CSR information

CRSG
Complex Resale Support Group

C-SOTS
CLEC Service Order Tracking System

CSR
Customer Service Record

CTTG
Common Transport Trunk Group - Final trunk groups between BellSouth & Independent end offices and the BellSouth access tandems.

CWINS Center
Customer Wholesale Interconnection Network Services Center (formerly the UNE Center).

D

DA
Directory Assistance

Design
Design Service is defined as any Special or Plain Old Telephone Service Order which requires BellSouth Design Engineering Activities.

Disposition & Cause
Types of trouble conditions, e.g. No Trouble Found, Central Office Equipment, Customer Premises Equipment, etc.

DLETH
Display Lengthy Trouble History - A history report that gives all activity on a line record for trouble reports in LMOS.

DLR
Detail Line Record - All the basic information maintained on a line record in LMOS, e.g. name, address, facilities, features etc.

DS-0
The worldwide standard speed for one digital voice signal (64000 bps).

DS-1
24 DS-0s (1.544Mb/sec., i.e. carrier systems)

DOE
Direct Order Entry System - An internal BellSouth service order entry system used by BellSouth Service Representatives to input business service orders in BellSouth format.

DOM
Delivery Order Manager - Telcordia product designed for the electronic submission of xDSL Local Service Requests.

DSAP
DOE (Direct Order Entry) Support Application - The BellSouth Operations System which assists a Service Representative or similar carrier agent in negotiating service provisioning commitments for non-designed services and Unbundled Network Elements.

DSAPDDI
DSAP software contract for schedule information.

DSL
Digital Subscriber Line

DUI
Database Update Information

E

E911
Provides callers access to the applicable emergency services bureau by dialing a 3-digit universal telephone number.

EDI
Electronic Data Interchange - The computer-to-computer exchange of inter and/or intra-company business documents in a public standard format.

ESSX
BellSouth Centrex Service

F

Fatal Reject
LSRs electronically rejected from LEO, which checks to see of the LSR has all the required fields correctly populated.

Flow-Through
In the context of this document, LSRs submitted electronically via the CLEC mechanized ordering process that flow through to the BellSouth OSS without manual or human intervention.

FOC
Firm Order Confirmation - A notification returned to the CLEC confirming that the LSR has been received and accepted, including the specified commitment date.

FX
Foreign Exchange

G H

HAL
“Hands Off” Assignment Logic - Front end access and error resolution logic used in interfacing BellSouth Operations Systems such as ATLAS, BOCRIS, LMOS, PSIMS, RSAG and SOCS.

HALCRIS
HAL software contract for CSR information

HDSL
High Density Subscriber Loop/Line

I J K

ILEC
Incumbent Local Exchange Company

INP
Interim Number Portability

ISDN
Integrated Services Digital Network

IPC
Interconnection Purchasing Center

L

LAN
Local Area Network

LAUTO
The automatic processor in the LNP Gateway that validates LSRs and issues service orders.

LCSC
Local Carrier Service Center - The BellSouth center which is dedicated to handling CLEC LSRs, ASRs, and Preordering transactions along with associated expedite requests and escalations.

Legacy System
Term used to refer to BellSouth Operations Support Systems (see OSS)

LENS
Local Exchange Negotiation System - The BellSouth LAN/web server/OS application developed to provide both preordering and ordering electronic interface functions for CLECs.

LEO
Local Exchange Ordering - A BellSouth system which accepts the output of EDI, applies edit and formatting checks, and reformats the Local Service Requests in BellSouth Service Order format.

LERG
Local Exchange Routing Guide

LESOG
Local Exchange Service Order Generator - A BellSouth system which accepts the service order output of LEO and enters the Service Order into the Service Order Control System using terminal emulation technology.

LFACS
Loop Facilities Assessment and Control System

LIDB
Line Information Database

LISC
Local Interconnection Service Center - The center that issues trunk orders.

LMOS
Loop Maintenance Operations System - A BellSouth Operations System that stores the assignment and selected account information for use by downstream OSS and BellSouth personnel during provisioning and maintenance activities.

LMOS HOST
LMOS host computer

LMOSupd
LMOS updates

LMU
Loop Make-up

LMUS

Loop Make-up Service Inquiry

LNP
Local Number Portability - In the context of this document, the capability for a subscriber to retain his current telephone number as he transfers to a different local service provider.

Loops
Transmission paths from the central office to the customer premises.

LRN
Location Routing Number

LSR
Local Service Request – A request for local resale service or unbundled network elements from a CLEC.

M

Maintenance & Repair
The process and function by which trouble reports are passed to BellSouth and by which the related service problems are resolved.

MARCH
BellSouth Operations System which accepts service orders, interprets the coding contained in the service order image, and constructs the specific switching system Recent Change command messages for input into end office switches.

N

NBR
New Business Request

NC
"No Circuits" - All circuits busy announcement.

NIW
Network Information Warehouse

NMLI
Native Mode LAN Interconnection

NPA
Numbering Plan Area

NXX
The "exchange" portion of a telephone number.

O

OASIS
Obtain Availability Services Information System - A BellSouth front-end processor, which acts as an interface between COFFI and RNS. This system takes the USOCs in COFFI and translates them to English for display in RNS.

OASISBSN
OASIS software contract for feature/service

OASISCAR
OASIS software contract for feature/service

OASISLPC
OASIS software contract for feature/service

OASISMTN
OASIS software contract for feature/service

OASISNET
OASIS software contract for feature/service

OASISOCP
OASIS software contract for feature/service

ORDERING
The process and functions by which resale services or unbundled network elements are ordered from BellSouth as well as the process by which an LSR or ASR is placed with BellSouth.

OSPCM
Outside Plant Contract Management System - Provides Scheduling Information.

OSS
Operations Support System - A support system or database which is used to mechanize the flow or performance of work. The term is used to refer to the overall system consisting of hardware complex, computer operating system(s), and application which is used to provide the support functions.

Out Of Service
Customer has no dial tone and cannot call out.

P

PMAP
Performance Measurement Analysis Platform

PMQAP
Performance Measurement Quality Assurance Plan

PON
Purchase Order Number

POTS
Plain Old Telephone Service

PREDICTOR
The BellSouth Operations system which is used to administer proactive maintenance and rehabilitation activities on outside plant facilities, provide access to selected work groups (e.g. RRC & BRC) to Mechanized Loop Testing and switching system I/O ports, and provide certain information regarding the attributes and capabilities of outside plant facilities.

Preordering
The process and functions by which vital information is obtained, verified, or validated prior to placing a service request.

PRI
Primary Rate ISDN

Provisioning
The process and functions by which necessary work is performed to activate a service requested via an LSR or ASR and to initiate the proper billing and accounting functions.

PSIMS

Product/Service Inventory Management System - A BellSouth database Operations System which contains availability information on switching system features and capabilities and on BellSouth service availability. This database is used to verify the availability of a feature or service in an NXX prior to making a commitment to the customer.

PSIMSORB
PSIMS software contract for feature/service.

Q R

RNS
Regional Negotiation System - An internal BellSouth service order entry system used by BellSouth Consumer Services to input service orders in BellSouth format.

ROS
Regional Ordering System

RRC
Residence Repair Center - The BellSouth Consumer Services trouble receipt center which serves residential customers.

RSAG
Regional Street Address Guide - The BellSouth database, which contains street addresses validated to be accurate with state and local governments.

RSAGADDR
RSAG software contract for address search.

RSAGTN
RSAG software contract for telephone number search.

S

SAC
Service Advocacy Center

SEEM
Self Effectuating Enforcement Mechanism

SOCS
Service Order Control System - The BellSouth Operations System which routes service order images among BellSouth drop points and BellSouth Operations Systems during the service provisioning process.

SOG
Service Order Generator - Telcordia product designed to generate a service order for xDSL.

SOIR
Service Order Interface Record - any change effecting activity to a customer account by service order that impacts 911/E911

SONGS
Service Order Negotiation and Generation System.

T

TAFI
Trouble Analysis Facilitation Interface - The BellSouth Operations System that supports trouble receipt center personnel in taking and handling customer trouble reports.

TAG
Telecommunications Access Gateway – TAG was designed to provide an electronic interface, or machine-to-machine interface for the bi-directional flow of information between BellSouth's OSSs and participating CLECs.

TN
Telephone Number

Total Manual Fallout
The number of LSRs which are entered electronically but require manual entering into a service order generator.

U V

UNE
Unbundled Network Element

UCL
Unbundled Copper Link

USOC
Universal Service Order Code

W X Y Z

WATS
Wide Area Telephone Service

WFA
Work Force Administration

WMC
Work Management Center

WTN
Working Telephone Number.

Appendix C: Appendix C: BellSouth Audit Policy

BellSouth currently provides many CLECs with certain audit rights as a part of their individual interconnection agreements. However, it is not reasonable for BellSouth to undergo an audit of the SQM for every CLEC with which it has a contract. BellSouth has developed a proposed Audit Plan for use by the parties to an audit. If requested by a Public Service Commission or by a CLEC exercising contractual audit rights, BellSouth will agree to undergo a comprehensive audit of the aggregate level reports for both BellSouth and the CLEC(s) each of the next five (5) years (2001-2005) to be conducted by an independent third party. The results of that audit will be made available to all the parties subject to proper safeguards to protect proprietary information. This aggregate level audit includes the following specifications:

1. The cost shall be borne 50% by BellSouth and 50% by the CLEC or CLECs.
2. The independent third party auditor shall be selected with input from BellSouth, the PSC, if applicable, and the CLEC(s).
3. BellSouth, the PSC and the CLEC(s) shall jointly determine the scope of the audit.

BellSouth reserves the right to make changes to this audit policy as growth and changes in the industry dictate.

Attachment 11

BellSouth Disaster Recovery Plan

CONTENTS

PAGE

1.0	Purpose	2
2.0	Single Point of Contact	2
3.0	Identifying the Problem	2
3.1	Site Control	3
3.2	Environmental Concerns	4
4.0	The Emergency Control Center (ECC)	4
5.0	Recovery Procedures	5
5.1	CLEC Outage	5
5.2	BellSouth Outage	5
5.2.1	Loss of Central Office	6
5.2.2	Loss of a Central Office with Serving Wire Center Functions	6
5.2.3	Loss of a Central Office with Tandem Functions	6
5.2.4	Loss of a Facility Hub	6
5.3	Combined Outage (CLEC and BellSouth Equipment)	7
6.0	T1 Identification Procedures	7
7.0	Acronyms	8

1.0 PURPOSE

In the unlikely event of a disaster occurring that affects BellSouth's long-term ability to deliver traffic to a Competitive Local Exchange Carrier (CLEC), general procedures have been developed to hasten the recovery process. Since each location is different and could be affected by an assortment of potential problems, a detailed recovery plan is impractical. However, in the process of reviewing recovery activities for specific locations, some basic procedures emerge that appear to be common in most cases.

These general procedures should apply to any disaster that affects the delivery of traffic for an extended time period. Each CLEC will be given the same consideration during an outage and service will be restored as quickly as possible.

This document will cover the basic recovery procedures that would apply to every CLEC.

2.0 SINGLE POINT OF CONTACT

When a problem is experienced, regardless of the severity, the BellSouth Network Management Center (NMC) will observe traffic anomalies and begin monitoring the situation. Controls will be appropriately applied to insure the sanity of BellSouth's network; and, in the event that a switch or facility node is lost, the NMC will attempt to circumvent the failure using available reroutes.

BellSouth's NMC will remain in control of the restoration efforts until the problem has been identified as being a long-term outage. At that time, the NMC will contact BellSouth's Emergency Control Center (ECC) and relinquish control of the recovery efforts. Even though the ECC may take charge of the situation, the NMC will continue to monitor the circumstances and restore traffic as soon as damaged network elements are revitalized.

The telephone number for the BellSouth Network Management Center in Atlanta, as published in Telcordia's National Network Management Directory, is 404-321-2516.

3.0 IDENTIFYING THE PROBLEM

During the early stages of problem detection, the NMC will be able to tell which CLECs are affected by the catastrophe. Further analysis and/or first hand observation will determine if the disaster has affected CLEC equipment only; BellSouth equipment only or a combination. The initial restoration activity will be largely determined by the equipment that is affected.

Once the nature of the disaster is determined and after verifying the cause of the problem, the NMC will initiate reroutes and/or transfers that are jointly agreed upon by the affected CLECs' Network Management Center and the BellSouth NMC. The type and percentage of controls used will depend upon available network capacity. Controls necessary to stabilize the situation will be invoked and the NMC will attempt to re-establish as much traffic as possible.

For long term outages, recovery efforts will be coordinated by the Emergency Control Center (ECC). Traffic controls will continue to be applied by the NMC until facilities are re-established. As equipment is made available for service, the ECC will instruct the NMC to begin removing the controls and allow traffic to resume.

3.1 SITE CONTROL

In the total loss of building use scenario, what likely exists will be a smoking pile of rubble. This rubble will contain many components that could be dangerous. It could also contain any personnel on the premises at the time of the disaster. For these reasons, the local fire marshal with the assistance of the police will control the site until the building is no longer a threat to surrounding properties and the companies have secured the site from the general public.

During this time, the majority owner of the building should be arranging for a demolition contractor to mobilize to the site with the primary objective of reaching the cable entrance facility for a damage assessment. The results of this assessment would then dictate immediate plans for restoration, both short term and permanent.

In a less catastrophic event, i.e., the building is still standing and the cable entrance facility is usable, the situation is more complex. The site will initially be controlled by local authorities until the threat to adjacent property has diminished. Once the site is returned to the control of the companies, the following events should occur.

An initial assessment of the main building infrastructure systems (mechanical, electrical, fire and life safety, elevators, and others) will establish building needs. Once these needs are determined, the majority owner should lead the building restoration efforts. There may be situations where the site will not be totally restored within the confines of the building. The companies must individually determine their needs and jointly assess the cost of permanent restoration to determine the overall plan of action.

Multiple restoration trailers from each company will result in the need for designated space and installation order. This layout and control is required to maximize the amount of restoration equipment that can be placed at the site, and the priority of placements.

Care must be taken in this planning to insure other restoration efforts have logistical access to the building. Major components of telephone and building equipment will need to be removed and replaced. A priority for this equipment must also be jointly established to facilitate overall site restoration. (Example: If the AC switchgear has sustained damage, this would be of the highest priority in order to regain power, lighting, and HVAC throughout the building.)

If the site will not accommodate the required restoration equipment, the companies would then need to quickly arrange with local authorities for street closures, rights of way or other possible options available.

3.2 ENVIRONMENTAL CONCERNS

In the worse case scenario, many environmental concerns must be addressed. Along with the police and fire marshal, the state environmental protection department will be on site to monitor the situation.

Items to be concerned with in a large central office building could include:

1. Emergency engine fuel supply. Damage to the standby equipment and the fuel handling equipment could have created "spill" conditions that have to be handled within state and federal regulations.

2. Asbestos containing materials that may be spread throughout the wreckage. Asbestos could be in many components of building, electrical, mechanical, outside plant distribution, and telephone systems.

3. Lead and acid. These materials could be present in potentially large quantities depending upon the extent of damage to the power room.

4. Mercury and other regulated compounds resident in telephone equipment.

5. Other compounds produced by the fire or heat.

Once a total loss event occurs at a large site, local authorities will control immediate clean up (water placed on the wreckage by the fire department) and site access.

At some point, the companies will become involved with local authorities in the overall planning associated with site clean up and restoration. Depending on the clean up approach taken, delays in the restoration of several hours to several days may occur.

In a less severe disaster, items listed above are more defined and can be addressed individually depending on the damage.

In each case, the majority owner should coordinate building and environmental restoration as well as maintain proper planning and site control.

4.0 THE EMERGENCY CONTROL CENTER (ECC)

The ECC is located in the Colonnade Building in Birmingham, Alabama. During an emergency, the ECC staff will convene a group of pre-selected experts to inventory the damage and initiate corrective actions. These experts have regional access to BellSouth's personnel and equipment and will assume control of the restoration activity anywhere in the nine-state area.

In the past, the ECC has been involved with restoration activities resulting from hurricanes, ice storms and floods. They have demonstrated their capabilities during these calamities as well as

during outages caused by human error or equipment failures. This group has an excellent record of restoring service as quickly as possible.

During a major disaster, the ECC may move emergency equipment to the affected location, direct recovery efforts of local personnel and coordinate service restoration activities with the CLECs. The ECC will attempt to restore service as quickly as possible using whatever means is available; leaving permanent solutions, such as the replacement of damaged buildings or equipment, for local personnel to administer.

Part of the ECC's responsibility, after temporary equipment is in place, is to support the NMC efforts to return service to the CLECs. Once service has been restored, the ECC will return control of the network to normal operational organizations. Any long-term changes required after service is restored will be made in an orderly fashion and will be conducted as normal activity.

5.0 RECOVERY PROCEDURES

The nature and severity of any disaster will influence the recovery procedures. One crucial factor in determining how BellSouth will proceed with restoration is whether or not BellSouth's equipment is incapacitated. Regardless of who's equipment is out of service, BellSouth will move as quickly as possible to aid with service recovery; however, the approach that will be taken may differ depending upon the location of the problem.

5.1 CLEC OUTAGE

For a problem limited to one CLEC (or a building with multiple CLECs), BellSouth has several options available for restoring service quickly. For those CLECs that have agreements with other CLECs, BellSouth can immediately start directing traffic to a provisional CLEC for completion. This alternative is dependent upon BellSouth having concurrence from the affected CLECs.

Whether or not the affected CLECs have requested a traffic transfer to another CLEC will not impact BellSouth's resolve to re-establish traffic to the original destination as quickly as possible.

5.2 BELLSOUTH OUTAGE

Because BellSouth's equipment has varying degrees of impact on the service provided to the CLECs, restoring service from damaged BellSouth equipment is different. The outage will probably impact a number of Carriers simultaneously. However, the ECC will be able to initiate immediate actions to correct the problem.

A disaster involving any of BellSouth's equipment locations could impact the CLECs, some more than others. A disaster at a Central Office (CO) would only impact the delivery of traffic to and from that one location, but the incident could affect many Carriers. If the Central Office is a Serving Wire Center (SWC), then traffic from the entire area to those Carriers served from that switch would also be impacted. If the switch functions as an Access Tandem, or there is a tandem in the building, traffic from every CO to every CLEC could be interrupted. A disaster that destroys a facility hub could disrupt various traffic flows, even though the switching equipment may be unaffected.

The NMC would be the first group to observe a problem involving BellSouth's equipment. Shortly after a disaster, the NMC will begin applying controls and finding re-routes for the

completion of as much traffic as possible. These reroutes may involve delivering traffic to alternate Carriers upon receiving approval from the CLECs involved. In some cases, changes in translations will be required. If the outage is caused by the destruction of equipment, then the ECC will assume control of the restoration.

5.2.1 Loss of a Central Office

When BellSouth loses a Central Office, the ECC will

a) Place specialists and emergency equipment on notice;

b) Inventory the damage to determine what equipment and/or functions are lost;

c) Move containerized emergency equipment and facility equipment to the stricken area, if necessary;

d) Begin reconnecting service for Hospitals, Police and other emergency agencies; and

e) Begin restoring service to CLECs and other customers.

5.2.2 Loss of a Central Office with Serving Wire Center Functions

The loss of a Central Office that also serves as a Serving Wire Center (SWC) will be restored as described in Section 5.2.1.

5.2.3 Loss of a Central Office with Tandem Functions

When BellSouth loses a Central Office building that serves as an Access Tandem and as a SWC, the ECC will

a) Place specialists and emergency equipment on notice;

b) Inventory the damage to determine what equipment and/or functions are lost;

c) Move containerized emergency equipment and facility equipment to the stricken area, if necessary;

d) Begin reconnecting service for Hospitals, Police and other emergency agencies;

e) Re-direct as much traffic as possible to the alternate access tandem (if available) for delivery to those CLECs utilizing a different location as a SWC;

f) Begin aggregating traffic to a location near the damaged building. From this location, begin re-establishing trunk groups to the CLECs for the delivery of traffic normally found on the direct trunk groups. (This aggregation point may be the alternate access tandem location or another CO on a primary facility route.)

g) Begin restoring service to CLECs and other customers.

5.2.4 Loss of a Facility Hub

In the event that BellSouth loses a facility hub, the recovery process is much the same as above. Once the NMC has observed the problem and administered the appropriate controls, the ECC will assume authority for the repairs. The recovery effort will include

a) Placing specialists and emergency equipment on notice;

b) Inventorying the damage to determine what equipment and/or functions are lost;

c) Moving containerized emergency equipment to the stricken area, if necessary;

d) Reconnecting service for Hospitals, Police and other emergency agencies; and

e) Restoring service to CLECs and other customers. If necessary, BellSouth will aggregate the traffic at another location and build temporary facilities. This alternative would be viable for a location that is destroyed and building repairs are required.

5.3 COMBINED OUTAGE (CLEC AND BELLSOUTH EQUIPMENT)

In some instances, a disaster may impact BellSouth's equipment as well as the CLECs'. This situation will be handled in much the same way as described in Section 5.2.3. Since BellSouth and the CLECs will be utilizing temporary equipment, close coordination will be required.

6.0 T1 IDENTIFICATION PROCEDURES

During the restoration of service after a disaster, BellSouth may be forced to aggregate traffic for delivery to a CLEC. During this process, T1 traffic may be consolidated onto DS3s and may become unidentifiable to the Carrier. Because resources will be limited, BellSouth may be forced to "package" this traffic entirely differently then normally received by the CLECs. Therefore, a method for identifying the T1 traffic on the DS3s and providing the information to the Carriers is required.

7.0 ACRONYMS

CO	-	Central Office (BellSouth)
DS3	-	Facility that carries 28 T1s (672 circuits)
ECC	-	Emergency Control Center (BellSouth)
CLEC	-	Competitive Local Exchange Carrier
NMC	-	Network Management Center
SWC	-	Serving Wire Center (BellSouth switch)
T1	-	Facility that carries 24 circuits

Hurricane Information

During a hurricane, BellSouth will make every effort to keep CLECs updated on the status of our network. Information centers will be set up throughout BellSouth Telecommunications. These centers are not intended to be used for escalations, but rather to keep the CLEC informed of network related issues, area damages and dispatch conditions, etc.

Hurricane-related information can also be found on line at http://www.interconnection.bellsouth.com/network/disaster/dis_resp.htm. Information concerning Mechanized Disaster Reports can also be found at this website by clicking on CURRENT MDR REPORTS or by going directly to http://www.interconnection.bellsouth.com/network/disaster/mdrs.htm.

BST Disaster Management Plan

BellSouth maintenance centers have geographical and redundant communication capabilities. In the event of a disaster removing any maintenance center from service another geographical center would assume maintenance responsibilities. The contact numbers will not change and the transfer will be transparent to the CLEC.

Attachment 11

Bona Fide Request and New Business Requests Process

BONA FIDE REQUEST AND NEW BUSINESS REQUESTS PROCESS

1.0 The Parties agree that Talk America is entitled to order any Network Element, Interconnection option, service option or Resale Service required to be made available by the Communications Act of 1934, as modified by the Telecommunications Act of 1996 (the "Act"), FCC requirements or State Commission requirements. Talk America also shall be permitted to request the development of new or revised facilities or service options which are not required by the Act. Procedures applicable to requesting the addition of such facilities or service options are specified in this Attachment 12.

2.0 Bona Fide Requests ("BFR") are to be used when Talk America makes a request of BellSouth to provide a new or modified network element, interconnection option, or other service option pursuant to the Act that was not previously included in the Agreement. New Business Requests ("NBRs") are to be used when Talk America makes a request of BellSouth to provide a new or custom capability or function to meet Talk America's business needs that was not previously included in the Agreement. The BFR/NBR process is intended to facilitate the two-way exchange of information between Talk America and BellSouth, necessary for accurate processing of requests in a consistent and timely fashion.

3.0 A BFR shall be submitted in writing by Talk America and shall specifically identify the required service date, technical requirements, space requirements and/or such specifications that clearly define the request such that BellSouth has sufficient information to analyze and prepare a response. Such a request also shall include a Talk America's designation of the request as being (i) pursuant to the Telecommunications Act of 1996 (i.e. a "BFR") or (ii) pursuant to the needs of the business (i.e. a "NBR"). The request shall be sent to Talk America's Account Executive.

4.0 Talk America may cancel a BFR or NBR at any time. If Talk America cancels the request more than three (3) business days after submitting it, Talk America shall pay BellSouth's reasonable and demonstrable costs of processing and/or implementing the BFR or NBR up to the date of cancellation. If Talk America does not cancel a BFR or NBR, Talk America shall pay BellSouth's reasonable and demonstrable costs of processing and implementing the request.

5.0 **Preliminary Analysis**

5.1 Provision Adopted From Cbeyond Agreement and Expiring as of November 9, 2003.

Within fifteen (15) business days of its receipt of a BFR or NBR from Talk America, BellSouth shall respond to Talk America by providing a preliminary analysis of such Interconnection, Network Element, or other facility or service option that is the subject of the BFR or NBR. The preliminary analysis shall confirm that BellSouth will either offer access to the Interconnection, Network Element, or other facility or service option, or provide an explanation of why it is not technically feasible and/or why the request does not qualify as an Interconnection, Network Element, or is not otherwise required to be provided under the Act.

5.2 Provision To Become Effective on November 10, 2003 and Expiring as of the Expiration Date of this Agreement.

Within twenty-five (25) business days of its receipt of a BFR or NBR from Talk America, BellSouth shall respond to Talk America by providing a preliminary analysis of such Interconnection, Network Element, or other facility or service option that is the subject of the BFR or NBR. The preliminary analysis shall confirm that BellSouth will either offer access to the Interconnection, Network Element, or other facility or service option, or provide an explanation of why it is not technically feasible and/or why the request does not qualify as an Interconnection, Network Element, or is not otherwise required to be provided under the Act.

6.0 **Firm Price and Detailed Implementation Plan**

6.1 Provision Adopted From Cbeyond Agreement and Expiring as of November 9, 2003.

If BellSouth determines that the Interconnection, Network Element, or other facility or service option that is the subject of the BFR is technically feasible, BellSouth shall propose a firm price and a detailed implementation plan within forty (40) business days after receipt of the BFR. BellSouth may, but shall not be required to, provide a firm time and cost proposal for a NBR.

6.2 Provision To Become Effective on November 10, 2003 and Expiring as of the Expiration Date of this Agreement

If BellSouth determines that the Interconnection, Network Element, or other facility or service option that is the subject of the BFR is technically feasible, BellSouth shall propose a firm price and a detailed implementation plan within fifty (50) business days after receipt of the BFR. BellSouth may, but shall not be required to, provide a firm time and cost proposal for a NBR.

7.0 Within thirty (30) business days after its receipt of (i) a refusal of BellSouth to provide a BFR or NBR price quote, or (ii) the BFR or NBR price quote and implementation plan from BellSouth, Talk America must either confirm or cancel its order for such facility or service option. If it believes such quote is not consistent with the requirements of the Act, Talk America may at that time seek FCC or state Commission arbitration of its request, as appropriate. Any such arbitration applicable to Network Elements and/or Interconnection shall be conducted in accordance with standards prescribed in Section 252 of the Act.

8.0 Unless Talk America agrees otherwise, all prices shall be consistent with the pricing principles of the Act, FCC and/or the State Commission.

9.0 If either Party to a BFR or NBR believes that the other Party is not requesting, negotiating, or processing the Bona Fide Request in good faith, or disputes a determination, or price or cost quote, such Party may seek FCC or state Commission resolution of the dispute, as appropriate.

10.0 Upon agreement to the terms of a BFR or NBR, an amendment to the Agreement may be required.

Amendment to the
Interconnection Agreement Between
BellSouth Telecommunications, Inc.
and
The Other Phone Company, Inc. d/b/a Access One Communications,
The Other Phone Company, Inc. d/b/a Talk America Inc. (NOT in Florida), and
Talk America Inc.

This agreement (the "Amendment") is made and entered into between BellSouth Telecommunications, Inc. ("BellSouth"), a Georgia corporation, and The Other Phone Company, Inc. d/b/a Access One Communication, a Florida corporation, The Other Phone Company, Inc. d/b/a Talk America Inc. (NOT in Florida), a Florida corporation, and Talk America Inc., a Pennsylvania corporation ("collectively referred to as "Talk America"). This Amendment may refer to either BellSouth or Talk America or both as a "Party" or "Parties".

WHEREAS, BellSouth and Talk America wish to amend the interconnection agreement effective on June 12, 2002 (the "Agreement");

NOW THEREFORE, in consideration of the mutual provisions contained herein and other good and valuable consideration, the receipt and sufficiency of which are hereby acknowledged, BellSouth and Talk America hereby convenant and agree as follows:

1. The Unbundled Remote Call Forwarding rates contained in Exhibit B of Attachment 2 are hereby deleted in their entirety and replaced by the Unbundled Remote Call Forwarding rates contained in Exhibit 1 of this Amendment, incorporated herein by this reference.

2. The Parties agree that all of the other provisions of the Agreement, dated June 12, 2002, shall remain in full force and effect.

3. The Parties further agree that either or both of the Parties is authorized to submit this Amendment to the North Carolina Public Utilities Commission or other regulatory body having jurisdiction over the subject matter of this Amendment, for approval subject to Section 252(e) of the federal Telecommunications Act of 1996.

This Amendment is made effective upon the date that it is signed by both Parties.

IN WITNESS WHEREOF, the parties hereto have caused this Amendment to be executed by their respective duly authorized representatives on the date indicated below.

The Other Phone Company, Inc. d/b/a Access One Communication, The Other Phone Company, Inc. d/b/a Talk America Inc. (NOT in Florida), and Talk America Inc.	**BellSouth Telecommunications, Inc.**
Signature on File	Signature on File
Signature	Signature
Warren Brasselle	Chris Boltz
Name	Name
Senior V. P. Operations	Managing Director
Title	Title
8-1-02	8-5-02
Date	Date

UNBUNDLED NETWORK ELEMENTS - Alabama														Exhibit B of Attachment 2 of the Agreement			
CATEGORY		RATE ELEMENTS	Interim	Zone	BCS	USOC	RATES($)					Svc Order Submitted Elec per LSR	Svc Order Submitted Manually per LSR	Incremental Charge - Manual Svc Order vs. Electronic-1st	Incremental Charge - Manual Svc Order vs. Electronic-Add'l	Incremental Charge - Manual Svc Order vs. Electronic-Disc 1st	Incremental Charge - Manual Svc Order vs. Electronic-Disc Add'l
							Rec	Nonrecurring		Nonrecurring Disconnect		OSS Rates($)					
								First	Add'l	First	Add'l	SOMEC	SOMAN	SOMAN	SOMAN	SOMAN	SOMAN
	The "Zone" shown in the sections for stand-alone loops or loops as part of a combination refers to Geographically Deaveraged UNE Zones. To view Geographically Deaveraged UNE Zone Designations by Central Office, refer to internet Website: http://www.interconnection.bellsouth.com/become_a_clec/html/interconnection.htm																
UNBUNDLED LOCAL EXCHANGE SWITCHING(PORTS)																	
	UNBUNDLED PORT with REMOTE CALL FORWARDING CAPABILITY																
	UNBUNDLED REMOTE CALL FORWARDING SERVICE - RESIDENCE																
		Unbundled Remote Call Forwarding Service, Area Calling, Res			UEPVR	UERAC	1.38	2.38	2.27	1.42	1.33		15.66				
		Unbundled Remote Call Forwarding Service, Local Calling - Res			UEPVR	UERLC	1.38	2.38	2.27	1.42	1.33		15.66				
		Unbundled Remote Call Forwarding Service, InterLATA - Res			UEPVR	UERTE	1.38	2.38	2.27	1.42	1.33		15.66				
		Unbundled Remote Call Forwarding Service, IntraLATA - Res			UEPVR	UERTR	1.38	2.38	2.27	1.42	1.33		15.66				
	Non-Recurring																
		Unbundled Remote Call Forwarding Service - Conversion - Switch-as-is			UEPVR	USAC2		0.10	0.10				15.66				
		Unbundled Remote Call Forwarding Service - Conversion with allowed change (PIC and LPIC)			UEPVR	USACC		0.10	0.10				15.66				
	UNBUNDLED REMOTE CALL FORWARDING - Bus																
		Unbundled Remote Call Forwarding Service, Area Calling - Bus			UEPVB	UERAC	1.38	2.38	2.27	1.42	1.33		15.66				
		Unbundled Remote Call Forwarding Service, Local Calling - Bus			UEPVB	UERLC	1.38	2.38	2.27	1.42	1.33		15.66				
		Unbundled Remote Call Forwarding Service, InterLATA - Bus			UEPVB	UERTE	1.38	2.38	2.27	1.42	1.33		15.66				
		Unbundled Remote Call Forwarding Service, IntraLATA - Bus			UEPVB	UERTR	1.38	2.38	2.27	1.42	1.33		15.66				
		Unbundled Remote Call Forwarding Service Expanded and Exception Local Calling			UEPVB	UERVJ	1.38	2.38	2.27	1.42	1.33		15.66				
	Non-Recurring																
		Unbundled Remote Call Forwarding Service - Conversion - Switch-as-is			UEPVB	USAC2		0.10	0.10				15.66				
		Unbundled Remote Call Forwarding Service - Conversion with allowed change (PIC and LPIC)			UEPVB	USACC		0.10	0.10				15.66				

UNBUNDLED NETWORK ELEMENTS - Florida														Exhibit B of Attachment 2 of the Agreement			
CATEGORY		RATE ELEMENTS	Interim	Zone	BCS	USOC	RATES($)					Svc Order Submitted Elec per LSR	Svc Order Submitted Manually per LSR	Incremental Charge - Manual Svc Order vs. Electronic-1st	Incremental Charge - Manual Svc Order vs. Electronic-Add'l	Incremental Charge - Manual Svc Order vs. Electronic-Disc 1st	Incremental Charge - Manual Svc Order vs. Electronic-Disc Add'l
							Rec	Nonrecurring		Nonrecurring Disconnect		OSS Rates($)					
								First	Add'l	First	Add'l	SOMEC	SOMAN	SOMAN	SOMAN	SOMAN	SOMAN
	The "Zone" shown in the sections for stand-alone loops or loops as part of a combination refers to Geographically Deaveraged UNE Zones. To view Geographically Deaveraged UNE Zone Designations by Central Office, refer to internet Website: http://www.interconnection.bellsouth.com/become_a_clec/html/interconnection.htm																
UNBUNDLED LOCAL EXCHANGE SWITCHING(PORTS)																	
	UNBUNDLED PORT with REMOTE CALL FORWARDING CAPABILITY																
	UNBUNDLED REMOTE CALL FORWARDING SERVICE - RESIDENCE																
		Unbundled Remote Call Forwarding Service, Area Calling, Res			UEPVR	UERAC	1.40	3.74	3.63	1.88	1.80		11.90				
		Unbundled Remote Call Forwarding Service, Local Calling - Res			UEPVR	UERLC	1.40	3.74	3.63	1.88	1.80		11.90				
		Unbundled Remote Call Forwarding Service, InterLATA - Res			UEPVR	UERTE	1.40	3.74	3.63	1.88	1.80		11.90				
		Unbundled Remote Call Forwarding Service, IntraLATA - Res			UEPVR	UERTR	1.40	3.74	3.63	1.88	1.80		11.90				
	Non-Recurring																
		Unbundled Remote Call Forwarding Service - Conversion - Switch-as-is			UEPVR	USAC2		0.102	0.102				11.90				
		Unbundled Remote Call Forwarding Service - Conversion with allowed change (PIC and LPIC)			UEPVR	USACC		0.102	0.102								
	UNBUNDLED REMOTE CALL FORWARDING - Bus																
		Unbundled Remote Call Forwarding Service, Area Calling - Bus			UEPVB	UERAC	1.40	3.74	3.63	1.88	1.80		11.90				
		Unbundled Remote Call Forwarding Service, Local Calling - Bus			UEPVB	UERLC	1.40	3.74	3.63	1.88	1.80		11.90				
		Unbundled Remote Call Forwarding Service, InterLATA - Bus			UEPVB	UERTE	1.40	3.74	3.63	1.88	1.80		11.90				
		Unbundled Remote Call Forwarding Service, IntraLATA - Bus			UEPVB	UERTR	1.40	3.74	3.63	1.88	1.80		11.90				
		Unbundled Remote Call Forwarding Service Expanded and Exception Local Calling			UEPVB	UERVJ	1.40	3.74	3.63	1.88	1.80		11.90				
	Non-Recurring																
		Unbundled Remote Call Forwarding Service - Conversion - Switch-as-is			UEPVB	USAC2		0.102	0.102				11.90				
		Unbundled Remote Call Forwarding Service - Conversion with allowed change (PIC and LPIC)			UEPVB	USACC		0.102	0.102								

UNBUNDLED NETWORK ELEMENTS - Georgia														Exhibit B of Attachment 2 of the Agreement			
CATEGORY		RATE ELEMENTS	Interim	Zone	BCS	USOC	RATES($)					Svc Order Submitted Elec per LSR	Svc Order Submitted Manually per LSR	Incremental Charge - Manual Svc Order vs. Electronic-1st	Incremental Charge - Manual Svc Order vs. Electronic-Add'l	Incremental Charge - Manual Svc Order vs. Electronic-Disc 1st	Incremental Charge - Manual Svc Order vs. Electronic-Disc Add'l
							Rec	Nonrecurring		Nonrecurring Disconnect		OSS Rates($)					
								First	Add'l	First	Add'l	SOMEC	SOMAN	SOMAN	SOMAN	SOMAN	SOMAN
	The "Zone" shown in the sections for stand-alone loops or loops as part of a combination refers to Geographically Deaveraged UNE Zones. To view Geographically Deaveraged UNE Zone Designations by Central Office, refer to internet Website: http://www.interconnection.bellsouth.com/become_a_clec/html/interconnection.htm																
UNBUNDLED LOCAL EXCHANGE SWITCHING(PORTS)																	
	UNBUNDLED PORT with REMOTE CALL FORWARDING CAPABILITY																
	UNBUNDLED REMOTE CALL FORWARDING SERVICE - RESIDENCE																
		Unbundled Remote Call Forwarding Service, Area Calling, Res			UEPVR	UERAC	1.85	17.16	17.16					18.94	8.42		
		Unbundled Remote Call Forwarding Service, Local Calling - Res			UEPVR	UERLC	1.85	17.16	17.16					18.94	8.42		
		Unbundled Remote Call Forwarding Service, InterLATA - Res			UEPVR	UERTE	1.85	17.16	17.16					18.94	8.42		
		Unbundled Remote Call Forwarding Service, IntraLATA - Res			UEPVR	UERTR	1.85	17.16	17.16					18.94	8.42		
	Non-Recurring																
		Unbundled Remote Call Forwarding Service - Conversion - Switch-as-is			UEPVR	USAC2		2.01	0.31					33.67	7.88	11.17	3.91
		Unbundled Remote Call Forwarding Service - Conversion with allowed change (PIC and LPIC)			UEPVR	USACC		2.01	0.31								
	UNBUNDLED REMOTE CALL FORWARDING - Bus																
		Unbundled Remote Call Forwarding Service, Area Calling - Bus			UEPVB	UERAC	1.85	17.16	17.16					18.94	8.42		
		Unbundled Remote Call Forwarding Service, Local Calling - Bus			UEPVB	UERLC	1.85	17.16	17.16					18.94	8.42		
		Unbundled Remote Call Forwarding Service, InterLATA - Bus			UEPVB	UERTE	1.85	17.16	17.16					18.94	8.42		
		Unbundled Remote Call Forwarding Service, IntraLATA - Bus			UEPVB	UERTR	1.85	17.16	17.16					18.94	8.42		
		Unbundled Remote Call Forwarding Service Expanded and Exception Local Calling			UEPVB	UERVJ	1.85	17.16	17.16					18.94	8.42		
	Non-Recurring																
		Unbundled Remote Call Forwarding Service - Conversion - Switch-as-is			UEPVB	USAC2		2.01	0.31					33.67	7.88	11.17	3.91
		Unbundled Remote Call Forwarding Service - Conversion with allowed change (PIC and LPIC)			UEPVB	USACC		2.01	0.31								

UNBUNDLED NETWORK ELEMENTS - Kentucky														Exhibit B of Attachment 2 of the Agreement			
CATEGORY		RATE ELEMENTS	Interim	Zone	BCS	USOC	RATES($)					Svc Order Submitted Elec per LSR	Svc Order Submitted Manually per LSR	Incremental Charge - Manual Svc Order vs. Electronic-1st	Incremental Charge - Manual Svc Order vs. Electronic-Add'l	Incremental Charge - Manual Svc Order vs. Electronic-Disc 1st	Incremental Charge - Manual Svc Order vs. Electronic-Disc Add'l
							Rec	Nonrecurring		Nonrecurring Disconnect		OSS Rates($)					
								First	Add'l	First	Add'l	SOMEC	SOMAN	SOMAN	SOMAN	SOMAN	SOMAN
	The "Zone" shown in the sections for stand-alone loops or loops as part of a combination refers to Geographically Deaveraged UNE Zones. To view Geographically Deaveraged UNE Zone Designations by Central Office, refer to internet Website: http://www.interconnection.bellsouth.com/become_a_clec/html/interconnection.htm																
UNBUNDLED LOCAL EXCHANGE SWITCHING(PORTS)																	
	UNBUNDLED PORT with REMOTE CALL FORWARDING CAPABILITY																
	UNBUNDLED REMOTE CALL FORWARDING SERVICE - RESIDENCE																
		Unbundled Remote Call Forwarding Service, Area Calling, Res			UEPVR	UERAC	1.49	3.74	3.63				7.86				
		Unbundled Remote Call Forwarding Service, Local Calling - Res			UEPVR	UERLC	1.49	3.74	3.63				7.86				
		Unbundled Remote Call Forwarding Service, InterLATA - Res			UEPVR	UERTE	1.49	3.74	3.63				7.86				
		Unbundled Remote Call Forwarding Service, IntraLATA - Res			UEPVR	UERTR	1.49	3.74	3.63				7.86				
	Non-Recurring																
		Unbundled Remote Call Forwarding Service - Conversion - Switch-as-is			UEPVR	USAC2		0.10	0.10				7.86				
		Unbundled Remote Call Forwarding Service - Conversion with allowed change (PIC and LPIC)			UEPVR	USACC		0.10	0.10								
	UNBUNDLED REMOTE CALL FORWARDING - Bus																
		Unbundled Remote Call Forwarding Service, Area Calling - Bus			UEPVB	UERAC	1.49	3.74	3.63				7.86				
		Unbundled Remote Call Forwarding Service, Local Calling - Bus			UEPVB	UERLC	1.49	3.74	3.63				7.86				
		Unbundled Remote Call Forwarding Service, InterLATA - Bus			UEPVB	UERTE	1.49	3.74	3.63				7.86				
		Unbundled Remote Call Forwarding Service, IntraLATA - Bus			UEPVB	UERTR	1.49	3.74	3.63				7.86				
		Unbundled Remote Call Forwarding Service Expanded and Exception Local Calling			UEPVB	UERVJ	1.49	3.74	3.63				7.86				
	Non-Recurring																
		Unbundled Remote Call Forwarding Service - Conversion - Switch-as-is			UEPVB	USAC2		0.10	0.10				7.86				
		Unbundled Remote Call Forwarding Service - Conversion with allowed change (PIC and LPIC)			UEPVB	USACC		0.10	0.10								

UNBUNDLED NETWORK ELEMENTS - Louisiana														Exhibit B of Attachment 2 of the Agreement			
CATEGORY		RATE ELEMENTS	Interim	Zone	BCS	USOC	RATES($)					Svc Order Submitted Elec per LSR	Svc Order Submitted Manually per LSR	Incremental Charge - Manual Svc Order vs. Electronic-1st	Incremental Charge - Manual Svc Order vs. Electronic-Add'l	Incremental Charge - Manual Svc Order vs. Electronic-Disc 1st	Incremental Charge - Manual Svc Order vs. Electronic-Disc Add'l
							Rec	Nonrecurring		Nonrecurring Disconnect		OSS Rates($)					
								First	Add'l	First	Add'l	SOMEC	SOMAN	SOMAN	SOMAN	SOMAN	SOMAN
	The "Zone" shown in the sections for stand-alone loops or loops as part of a combination refers to Geographically Deaveraged UNE Zones. To view Geographically Deaveraged UNE Zone Designations by Central Office, refer to internet Website: http://www.interconnection.bellsouth.com/become_a_clec/html/interconnection.htm																
UNBUNDLED LOCAL EXCHANGE SWITCHING(PORTS)																	
	UNBUNDLED PORT with REMOTE CALL FORWARDING CAPABILITY																
	UNBUNDLED REMOTE CALL FORWARDING SERVICE - RESIDENCE																
		Unbundled Remote Call Forwarding Service, Area Calling, Res			UEPVR	UERAC	1.52	2.31	2.21				15.20				
		Unbundled Remote Call Forwarding Service, Local Calling - Res			UEPVR	UERLC	1.52	2.31	2.21				15.20				
		Unbundled Remote Call Forwarding Service, InterLATA - Res			UEPVR	UERTE	1.52	2.31	2.21				15.20				
		Unbundled Remote Call Forwarding Service, IntraLATA - Res			UEPVR	UERTR	1.52	2.31	2.21				15.20				
	Non-Recurring																
		Unbundled Remote Call Forwarding Service - Conversion - Switch-as-is			UEPVR	USAC2		0.10	0.10				15.20				
		Unbundled Remote Call Forwarding Service - Conversion with allowed change (PIC and LPIC)			UEPVR	USACC		0.10	0.10								
	UNBUNDLED REMOTE CALL FORWARDING - Bus																
		Unbundled Remote Call Forwarding Service, Area Calling - Bus			UEPVB	UERAC	1.52	2.31	2.21				15.20				
		Unbundled Remote Call Forwarding Service, Local Calling - Bus			UEPVB	UERLC	1.52	2.31	2.21				15.20				
		Unbundled Remote Call Forwarding Service, InterLATA - Bus			UEPVB	UERTE	1.52	2.31	2.21				15.20				
		Unbundled Remote Call Forwarding Service, IntraLATA - Bus			UEPVB	UERTR	1.52	2.31	2.21				15.20				
		Unbundled Remote Call Forwarding Service Expanded and Exception Local Calling			UEPVB	UERVJ	1.52	2.31	2.21				15.20				
	Non-Recurring																
		Unbundled Remote Call Forwarding Service - Conversion - Switch-as-is			UEPVB	USAC2		0.10	0.10				15.20				
		Unbundled Remote Call Forwarding Service - Conversion with allowed change (PIC and LPIC)			UEPVB	USACC		0.10	0.10								

UNBUNDLED NETWORK ELEMENTS - Mississippi														Exhibit B of Attachment 2 of the Agreement			
CATEGORY		RATE ELEMENTS	Interim	Zone	BCS	USOC	RATES($)					Svc Order Submitted Elec per LSR	Svc Order Submitted Manually per LSR	Incremental Charge - Manual Svc Order vs. Electronic-1st	Incremental Charge - Manual Svc Order vs. Electronic-Add'l	Incremental Charge - Manual Svc Order vs. Electronic-Disc 1st	Incremental Charge - Manual Svc Order vs. Electronic-Disc Add'l
							Rec	Nonrecurring		Nonrecurring Disconnect		OSS Rates($)					
								First	Add'l	First	Add'l	SOMEC	SOMAN	SOMAN	SOMAN	SOMAN	SOMAN
	The "Zone" shown in the sections for stand-alone loops or loops as part of a combination refers to Geographically Deaveraged UNE Zones. To view Geographically Deaveraged UNE Zone Designations by Central Office, refer to internet Website: http://www.interconnection.bellsouth.com/become_a_clec/html/interconnection.htm																
UNBUNDLED LOCAL EXCHANGE SWITCHING(PORTS)																	
	UNBUNDLED PORT with REMOTE CALL FORWARDING CAPABILITY																
	UNBUNDLED REMOTE CALL FORWARDING SERVICE - RESIDENCE																
		Unbundled Remote Call Forwarding Service, Area Calling, Res			UEPVR	UERAC	1.41	2.39	2.29	1.42	1.33		15.75				
		Unbundled Remote Call Forwarding Service, Local Calling - Res			UEPVR	UERLC	1.41	2.39	2.29	1.42	1.33		15.75				
		Unbundled Remote Call Forwarding Service, InterLATA - Res			UEPVR	UERTE	1.41	2.39	2.29	1.42	1.33		15.75				
		Unbundled Remote Call Forwarding Service, IntraLATA - Res			UEPVR	UERTR	1.41	2.39	2.29	1.42	1.33		15.75				
	Non-Recurring																
		Unbundled Remote Call Forwarding Service - Conversion - Switch-as-is			UEPVR	USAC2		0.0988	0.0988				15.75				
		Unbundled Remote Call Forwarding Service - Conversion with allowed change (PIC and LPIC)			UEPVR	USACC		0.0988	0.0988								
	UNBUNDLED REMOTE CALL FORWARDING - Bus																
		Unbundled Remote Call Forwarding Service, Area Calling - Bus			UEPVB	UERAC	1.41	2.39	2.29	1.42	1.33		15.75				
		Unbundled Remote Call Forwarding Service, Local Calling - Bus			UEPVB	UERLC	1.41	2.39	2.29	1.42	1.33		15.75				
		Unbundled Remote Call Forwarding Service, InterLATA - Bus			UEPVB	UERTE	1.41	2.39	2.29	1.42	1.33		15.75				
		Unbundled Remote Call Forwarding Service, IntraLATA - Bus			UEPVB	UERTR	1.41	2.39	2.29	1.42	1.33		15.75				
		Unbundled Remote Call Forwarding Service Expanded and Exception Local Calling			UEPVB	UERVJ	1.41	2.39	2.29	1.42	1.33		15.75				
	Non-Recurring																
		Unbundled Remote Call Forwarding Service - Conversion - Switch-as-is			UEPVB	USAC2		0.0988	0.0988				15.75				
		Unbundled Remote Call Forwarding Service - Conversion with allowed change (PIC and LPIC)			UEPVB	USACC		0.0988	0.0988								

UNBUNDLED NETWORK ELEMENTS - North Carolina														Exhibit B of Attachment 2 of the Agreement			
CATEGORY		RATE ELEMENTS	Interim	Zone	BCS	USOC	RATES($)					Svc Order Submitted Elec per LSR	Svc Order Submitted Manually per LSR	Incremental Charge - Manual Svc Order vs. Electronic-1st	Incremental Charge - Manual Svc Order vs. Electronic-Add'l	Incremental Charge - Manual Svc Order vs. Electronic-Disc 1st	Incremental Charge - Manual Svc Order vs. Electronic-Disc Add'l
							Rec	Nonrecurring		Nonrecurring Disconnect		OSS Rates($)					
								First	Add'l	First	Add'l	SOMEC	SOMAN	SOMAN	SOMAN	SOMAN	SOMAN
	The "Zone" shown in the sections for stand-alone loops or loops as part of a combination refers to Geographically Deaveraged UNE Zones. To view Geographically Deaveraged UNE Zone Designations by Central Office, refer to internet Website: http://www.interconnection.bellsouth.com/become_a_clec/html/interconnection.htm																
UNBUNDLED LOCAL EXCHANGE SWITCHING(PORTS)																	
	UNBUNDLED PORT with REMOTE CALL FORWARDING CAPABILITY																
	UNBUNDLED REMOTE CALL FORWARDING SERVICE - RESIDENCE																
		Unbundled Remote Call Forwarding Service, Area Calling, Res			UEPVR	UERAC	2.19	21.60	21.60					26.94	12.76		
		Unbundled Remote Call Forwarding Service, Local Calling - Res			UEPVR	UERLC	2.19	21.60	21.60					26.94	12.76		
		Unbundled Remote Call Forwarding Service, InterLATA - Res			UEPVR	UERTE	2.19	21.60	21.60					26.94	12.76		
		Unbundled Remote Call Forwarding Service, IntraLATA - Res			UEPVR	UERTR	2.19	21.60	21.60					26.94	12.76		
	Non-Recurring																
		Unbundled Remote Call Forwarding Service - Conversion - Switch-as-is			UEPVR	USAC2		2.77	0.40					26.94	12.76		
		Unbundled Remote Call Forwarding Service - Conversion with allowed change (PIC and LPIC)			UEPVR	USACC		2.77	0.40								
	UNBUNDLED REMOTE CALL FORWARDING - Bus																
		Unbundled Remote Call Forwarding Service, Area Calling - Bus			UEPVB	UERAC	2.19	21.60	21.60					26.94	12.76		
		Unbundled Remote Call Forwarding Service, Local Calling - Bus			UEPVB	UERLC	2.19	21.60	21.60					26.94	12.76		
		Unbundled Remote Call Forwarding Service, InterLATA - Bus			UEPVB	UERTE	2.19	21.60	21.60					26.94	12.76		
		Unbundled Remote Call Forwarding Service, IntraLATA - Bus			UEPVB	UERTR	2.19	21.60	21.60					26.94	12.76		
		Unbundled Remote Call Forwarding Service Expanded and Exception Local Calling			UEPVB	UERVJ	2.19	21.60	21.60					26.94	12.76		
	Non-Recurring																
		Unbundled Remote Call Forwarding Service - Conversion - Switch-as-is			UEPVB	USAC2		2.77	0.40					26.94	12.76		
		Unbundled Remote Call Forwarding Service - Conversion with allowed change (PIC and LPIC)			UEPVB	USACC		2.77	0.40								

UNBUNDLED NETWORK ELEMENTS - South Carolina														Exhibit B of Attachment 2 of the Agreement			
CATEGORY		RATE ELEMENTS	Interim	Zone	BCS	USOC	RATES($)					Svc Order Submitted Elec per LSR	Svc Order Submitted Manually per LSR	Incremental Charge - Manual Svc Order vs. Electronic-1st	Incremental Charge - Manual Svc Order vs. Electronic-Add'l	Incremental Charge - Manual Svc Order vs. Electronic-Disc 1st	Incremental Charge - Manual Svc Order vs. Electronic-Disc Add'l
							Rec	Nonrecurring		Nonrecurring Disconnect		OSS Rates($)					
								First	Add'l	First	Add'l	SOMEC	SOMAN	SOMAN	SOMAN	SOMAN	SOMAN
	The "Zone" shown in the sections for stand-alone loops or loops as part of a combination refers to Geographically Deaveraged UNE Zones. To view Geographically Deaveraged UNE Zone Designations by Central Office, refer to internet Website: http://www.interconnection.bellsouth.com/become_a_clec/html/interconnection.htm																
UNBUNDLED LOCAL EXCHANGE SWITCHING(PORTS)																	
	UNBUNDLED PORT with REMOTE CALL FORWARDING CAPABILITY																
	UNBUNDLED REMOTE CALL FORWARDING SERVICE - RESIDENCE																
		Unbundled Remote Call Forwarding Service, Area Calling, Res			UEPVR	UERAC	1.65	2.38	2.28	1.42	1.33		15.69				
		Unbundled Remote Call Forwarding Service, Local Calling - Res			UEPVR	UERLC	1.65	2.38	2.28	1.42	1.33		15.69				
		Unbundled Remote Call Forwarding Service, InterLATA - Res			UEPVR	UERTE	1.65	2.38	2.28	1.42	1.33		15.69				
		Unbundled Remote Call Forwarding Service, IntraLATA - Res			UEPVR	UERTR	1.65	2.38	2.28	1.42	1.33		15.69				
	Non-Recurring																
		Unbundled Remote Call Forwarding Service - Conversion - Switch-as-is			UEPVR	USAC2		0.10	0.10				15.69				
		Unbundled Remote Call Forwarding Service - Conversion with allowed change (PIC and LPIC)			UEPVR	USACC		0.10	0.10								
	UNBUNDLED REMOTE CALL FORWARDING - Bus																
		Unbundled Remote Call Forwarding Service, Area Calling - Bus			UEPVB	UERAC	1.65	2.38	2.28	1.42	1.33		15.69				
		Unbundled Remote Call Forwarding Service, Local Calling - Bus			UEPVB	UERLC	1.65	2.38	2.28	1.42	1.33		15.69				
		Unbundled Remote Call Forwarding Service, InterLATA - Bus			UEPVB	UERTE	1.65	2.38	2.28	1.42	1.33		15.69				
		Unbundled Remote Call Forwarding Service, IntraLATA - Bus			UEPVB	UERTR	1.65	2.38	2.28	1.42	1.33		15.69				
		Unbundled Remote Call Forwarding Service Expanded and Exception Local Calling			UEPVB	UERVJ	1.65	2.38	2.28	1.42	1.33		15.69				
	Non-Recurring																
		Unbundled Remote Call Forwarding Service - Conversion - Switch-as-is			UEPVB	USAC2		0.10	0.10				15.69				
		Unbundled Remote Call Forwarding Service - Conversion with allowed change (PIC and LPIC)			UEPVB	USACC		0.10	0.10								

UNBUNDLED NETWORK ELEMENTS - Tennessee														Exhibit B of Attachment 2 of the Agreement			
CATEGORY		RATE ELEMENTS	Interim	Zone	BCS	USOC	RATES($)					Svc Order Submitted Elec per LSR	Svc Order Submitted Manually per LSR	Incremental Charge - Manual Svc Order vs. Electronic-1st	Incremental Charge - Manual Svc Order vs. Electronic-Add'l	Incremental Charge - Manual Svc Order vs. Electronic-Disc 1st	Incremental Charge - Manual Svc Order vs. Electronic-Disc Add'l
							Rec	Nonrecurring		Nonrecurring Disconnect		OSS Rates($)					
								First	Add'l	First	Add'l	SOMEC	SOMAN	SOMAN	SOMAN	SOMAN	SOMAN
	The "Zone" shown in the sections for stand-alone loops or loops as part of a combination refers to Geographically Deaveraged UNE Zones. To view Geographically Deaveraged UNE Zone Designations by Central Office, refer to internet Website: http://www.interconnection.bellsouth.com/become_a_clec/html/interconnection.htm																
UNBUNDLED LOCAL EXCHANGE SWITCHING(PORTS)																	
	UNBUNDLED PORT with REMOTE CALL FORWARDING CAPABILITY																
	UNBUNDLED REMOTE CALL FORWARDING SERVICE - RESIDENCE																
		Unbundled Remote Call Forwarding Service, Area Calling, Res			UEPVR	UERAC	1.89	9.93	9.19	3.66	2.92			20.35	10.54	13.32	1.40
		Unbundled Remote Call Forwarding Service, Local Calling - Res			UEPVR	UERLC	1.89	9.93	9.19	3.66	2.92			20.35	10.54	13.32	1.40
		Unbundled Remote Call Forwarding Service, InterLATA - Res			UEPVR	UERTE	1.89	9.93	9.19	3.66	2.92			20.35	10.54	13.32	1.40
		Unbundled Remote Call Forwarding Service, IntraLATA - Res			UEPVR	UERTR	1.89	9.93	9.19	3.66	2.92			20.35	10.54	13.32	1.40
	Non-Recurring																
		Unbundled Remote Call Forwarding Service - Conversion - Switch-as-is			UEPVR	USAC2		1.03	0.29					20.35	10.54	13.32	1.40
		Unbundled Remote Call Forwarding Service - Conversion with allowed change (PIC and LPIC)			UEPVR	USACC		1.03	0.29								
	UNBUNDLED REMOTE CALL FORWARDING - Bus																
		Unbundled Remote Call Forwarding Service, Area Calling - Bus			UEPVB	UERAC	1.89	9.93	9.19	3.66	2.92			20.35	10.54	13.32	1.40
		Unbundled Remote Call Forwarding Service, Local Calling - Bus			UEPVB	UERLC	1.89	9.93	9.19	3.66	2.92			20.35	10.54	13.32	1.40
		Unbundled Remote Call Forwarding Service, InterLATA - Bus			UEPVB	UERTE	1.89	9.93	9.19	3.66	2.92			20.35	10.54	13.32	1.40
		Unbundled Remote Call Forwarding Service, IntraLATA - Bus			UEPVB	UERTR	1.89	9.93	9.19	3.66	2.92			20.35	10.54	13.32	1.40
		Unbundled Remote Call Forwarding Service Expanded and Exception Local Calling			UEPVB	UERVJ	1.89	9.93	9.19	3.66	2.92			20.35	10.54	13.32	1.40
	Non-Recurring																
		Unbundled Remote Call Forwarding Service - Conversion - Switch-as-is			UEPVB	USAC2		1.03	0.29					20.35	10.54	13.32	1.40
		Unbundled Remote Call Forwarding Service - Conversion with allowed change (PIC and LPIC)			UEPVB	USACC		1.03	0.29								