OWNER & CLIENT: Northern Kentucky Water District
OWNER ROADS:
KY 16 & KY 14– KYTC
JONES ROAD and DIXON ROAD – KENTON COUNTY
{Encroachment permits required}
UTILITES: Owen Co. RECC, Cincinnati Bell Telephone, Insight, Duke Energy

PROPOSED 8" WATER MAIN EXTENSIONS
SUB-DISTRICT I - ADDITION
BIRD ROAD & NORTHCUTT ROAD
KENTON COUNTY, KENTUCKY
NORTHERN KENTUCKY WATER DISTRICT
OCTOBER 2013

Occupational Safety and Health Administration (OSHA)

It shall be the full and complete responsibility of the contractor to meet and comply with safety requirements and regulations as established by OSHA or any other regulatory body. The owner and engineer will not perform any safety compliance inspections as the contractor has accepted full and complete responsibility for performing such inspections for compliance to the regulations.

The contractor shall indemnify and protect and hold harmless the owner and engineer from any loss, expense, fine, damage, or suit, including attorney's fees, arising out of any safety violation suits brought by injured persons and/or fines levied by OSHA or any other regulatory body, as a result of the contractor's work.

NOTE
CLSM WILL BE REQUIRED ON THIS PROJECT. CONTRACTOR TO VERIFY REQUIREMENTS w/PERMITTING AGENCIES AND APPLY TO APPROPRIATE BID ITEMS.

GENERAL NOTES:

1. CONTRACTOR SHALL SUPPLY FIELD NOTES UPON COMPLETION Of PROJECT IN SUFFICIENT DETAIL TO PREPARE "RECORD DRAWINGS."
2. TREES AND BUSHES SHALL BE REMOVED ONLY AS DIRECTED BY THE ENGINEER.
3. YARD RESTORATION SHALL CONFORM TO URBAN STANDARDS AND SPECIFICATIONS.
4. LOCATION OF UTILITIES AND STRUCTURES, BOTH SURFACE AND SUBSURFACE, ARE SHOWN ON THE PLANS FROM DATA AVAILABLE AT THE TIME OF BIDDING, AND ARE NOT NECESSARILY COMPLETE AND CORRECT. DURING CONSTRUCTION THE CONTRACTOR SHALL USE DILIGENCE IN PROTECTING FROM DAMAGE ALL EXISTING UTILITIES AND STRUCTURES WHETHER SHOWN ON THE PLAN OR NOT. IF DAMAGE IS CAUSED, THE CONTRACTOR WILL BE RESPONSIBLE FOR REPAIR OR RESTORATION OF SAME TO THE SATISFACTION OF THE ENGINEER AND UTILITY COMPANY.
5. CONTRACTOR IS RESPONSIBLE FOR EXPOSING UNDERGROUND UTILITIES AS DIRECTED BY THE ENGINEER PRIOR TO CONSTRUCTION STAKING TO VERIFY THE EXACT LOCATION AND DEPTH OF UTILITIES.
6. WHEN ENCOUNTERING CULVERTS AND UTILITY STRUCTURES ABOVE PROPOSED WATER MAIN THE CONTRACTOR WILL TUNNEL UNDER THE STRUCTURE. CONTRACTOR IS RESPONSIBLE FOR PROTECTING THE STRUCTURES FROM DAMAGE. {SEE NOTE 4}
7. CONTRACTOR TO FOLLOW EROSION CONTROL MEASURES AS SPECIFIED ON THE PLAN AND IN THE ASSOCIATED BMP {SWPPP} BOOK.
8. CONTRACTOR TO RESTORE ROAD DITCH LINE TO SATISFACTION OF ENGINEER AND GOVERNING AGENCY.

* FOR FURTHER INSTRUCTIONS AND SPECIFICATIONS – SEE SPEC. BOOK

GAS FACILITY NOTES:

I. FOR GAS DISTRIBUTION ENGINEERING NOTIFICATION, AGREEMENTS AND OFFICIAL CORRESPONDENCE, ADDRESS TO:
LAURA MATE', P.E.
GAS DISTRIBUTION ENGINEERING
P.O. BOX 960, ROOM 460A
CINCINNATI, OH 45201–0960

II. THE PRINT SHOWS THE APPROXIMATE LOCATION AND DEPTHS OF COVER AND IS PROVIDED TO COMPLY WITH STATUTORY REGULATIONS. THE INFORMATION SHOULD BE USED ONLY FOR PLANNING, NOT CONSTRUCTION.

III. ALL GAS FACILITY DEPTHS NOTED ARE APPROXIMATE DEPTHS RECORDED AT THE TIME OF INSTALLATION ANY RESULTING GRADE CHANGES SINCE THE TIME OF THE MAIN INSTALLATION WILL CAUSE THE EXISTING DEPTH OF COVER TO BE DIFFERENT. EXTREME CARE MUST BE TAKEN TO ENSURE SAFE EXCAVATION WHEN APPROACHING KNOWN OR SUSPECTED GAS FACILITIES.

IV. ALL GAS SERVICES WERE INSTALLED AT A MINIMUM OF 1'–6" COVER. SEE III ABOVE.

V. FOR ADDITIONAL GAS FACILITY INFORMATION, CALL (513)287–2532 OR (513)287–1264.

VI. TO COMPLY WITH FEDERAL AND STATE REGULATIONS CONCERNING DAMAGE PREVENTION PROGRAMS THE UTILITY COMPANIES MUST BE CONTACTED AT LEAST 48 HOURS (2 WORKING DAYS) PRIOR TO EXCAVATION BY CALLING KENTUCKY UNDERGROUND PROTECTION INC. (KUPI), TOLL FREE AT 1–800–752–6007.

CONSTRUCTION NOTES:

I GAS FACILITIES ARE TO BE KEPT IN SERVICE AT ALL TIMES.

II. THE CONTRACTOR SHALL BE RESPONSIBLE FOR ALL DAMAGE TO GAS FACILITIES DURING OR AS A RESULT OF THE CONTRACTOR'S CONSTRUCTION. ALL DAMAGE TO GAS FACILITIES DURING ADJUSTMENTS, RELOCATION'S AND/OR REPAIRS WILL BE MADE AT THE CONTRACTOR'S EXPENSE.

III. THE CONTRACTOR SHALL SHEET AND SHORE ALL EXCAVATIONS AS REQUIRED TO CONTINUOUSLY SUPPORT GAS FACILITIES WITHIN THE ZONE OF INFLUENCE (AS DETERMINED BY THE NATURAL ANGLE OF REPOSE OF THE SOIL).

IV. CROSSING BURIED GAS FACILITIES WITH HEAVY CONSTRUCTION EQUIPMENT MAY CAUSE DAMAGE TO THE GAS FACILITIES. CONTACT THE GAS ENGINEERING DEPARTMENT FOR DETAILS ON HOW TO PROTECT THE GAS FACILITIES FROM DAMAGE.

V. THE CONTRACTOR SHALL NOT BACKFILL EXPOSED GAS FACILITIES UNTIL THE UTILITY HAS INSPECTED ITS FACILITIES AND PERFORMED ANY MAINTENANCE AND/OR ADJUSTMENTS THAT MAY BE REQUIRED.

VI. THE CONTRACTOR IS RESPONSIBLE FOR PREVENTING ANY DAMAGE TO TO OUR GAS FACILITIES. THIS INCLUDES PROTECTION OF COOLINGS AND WRAPPINGS ON STEEL GAS MAINS. IT ALSO INCLUDES ANY DAMAGE WHICH MA HAVE OCCURRED TO PLASTIC GAS MAINS, SUCH AS CRIMPS OR GAUGES.

VII. WHEN CAST IRON OR SIMILAR GAS FACILITIES ARE EXPOSED OR INTERFERED WITH BY THE CONTRACTOR, REPLACEMENT OR REINFORCEMENT BY ULH&P MAY BE REQUIRED AT THE CONTRACTOR'S EXPENSE. BACKFILL WITH CONTROL LOW STRENGTH MATERIAL WILL BE REQUIRED.

VIII. BLASTING OR OTHER CONSTRUCTION PROCEDURES WHICH MAY TRANSMIT LOADS OR VIBRATIONS IN THE VICINITY OF GAS FACILITIES MUST BE APPROVED BY ULH&P'S GAS ENGINEERING DEPARTMENT. A BLASTING PLAN, IDENTIFYING ALL PERTINENT INFORMATION, MUST BE SUBMITTED IN WRITING BY A BLASTING EXPERT PRIOR TO ANY WORK.

PROPOSED DEVELOPMENTS AT GAS R/W & EASEMENTS (IF APPLICABLE)

I. PROPOSED DEVELOPMENT PLANS AROUND AND NEAR GAS FACILITIES WITHIN PRIVATE EASEMENTS MUST BE SUBMITTED TO DUKE'S GAS ENGINEERING DEPARTMENT FOR REVIEW. THESE PLANS MUST BE APPROVED ANY WORK MAY BEGIN WITHIN OUR EASEMENT.

II. SPECIFIED EASEMENT WIDTHS MUST BE MAINTAINED IN ORDER FOR DUKE TO PROTECT IT'S FACILITIES.

III. NO PERMANENT STRUCTURES MAY BE BUILT WITHIN THE EASEMENTS.

IV. CUTS AND FILL S ARE GENERALLY NOT PERMITTED WITHIN THE EASEMENTS. SOME FILLS MAY BE ALLOWED AND WILL BE REVIEWED ON AN INDIVIDUAL BASIS. ANY PERMITTED FILLS WILL BE LIMITED TO AN AMOUNT WHICH WILL ALLOW ULH&P TO PROPERLY MAINTAIN ITS FACILITIES.

V. PERPENDICULAR UTILITY CROSSINGS OF GAS EASEMENTS ARE ACCEPTABLE, PROVIDED PROPER CLEARANCES ARE MAINTAINED. PARALLEL INSTALLATION ARE NORMALLY NOT ALLOWED.

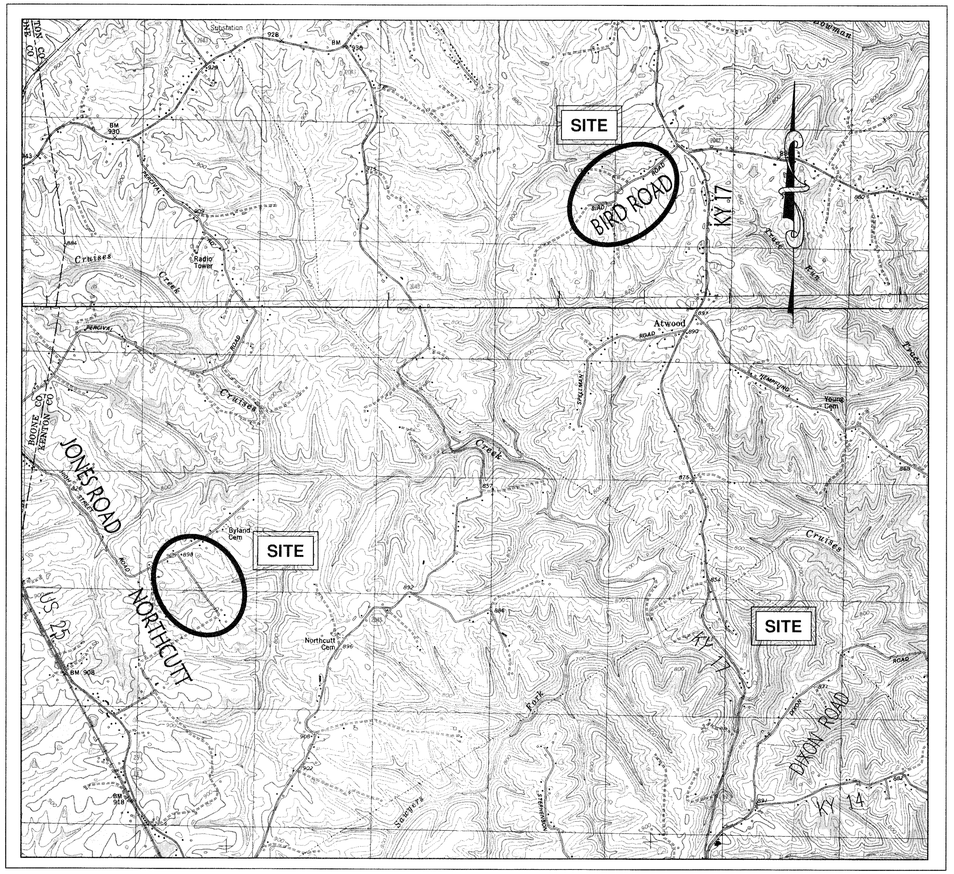

SCALE 1"=2000'
U.S.G.S. INDEPENDENCE & WALTON QUADS

DUKE ENERGY

1. DANGER – CONTRACTOR SHALL CONTACT THE COMPANY PRIOR TO EXCAVATION IN VICINITY OF ELECTRIC UNDERGROUND FACILITIES OR WHEN WORKING IN CLOSE PROXIMITY OF OVERHEAD ELECTRIC FACILITIES.
   (A) FOR FIELD INSPECTOR TO LOCATE UNDERGROUND ELECTRIC LINES: IN OHIO, CALL "OHIO UTILITIES PROTECTION SERVICE", 1–800–362–2764, IN KENTUCKY, CALL "KENTUCKY DIG SAFELY", 1–800–752–6007 THESE CALLS SHOULD BE MADE AT LEAST 48 HOURS IN ADVANCE, EXCLUDING SATURDAYS, SUNDAYS, AND STATE LEGAL HOLIDAYS.
   (B) FOR NOTIFICATION OF CONSTRUCTION ACTIVITY NEAR ENERGIZED ELECTRIC FACILITIES CALL (513) 421–9500, OR THE ELECTRIC TECHNICIAN, IF KNOWN, WHO HAS BEEN ASSIGNED TO YOUR PROJECT, AT LEAST 48 HOURS IN ADVANCE.
   (C) FOR ADDITIONAL UNDERGROUND ELECTRIC RECORD INFORMATION, CALL (513) 287–2454.
   (D) FOR ELECTRIC ENGINEERING NOTIFICATION, AGREEMENTS AND CORRESPONDENCE, ADDRESS TO MR. TOM BIRKENHAUER, DUKE ENERGY CORPORATION, DISTRIBUTION DESIGN ENGINEERING, ROOM 467A, 139 E. FOURTH STREET, P.O. BOX 960, CINCINNATI, OH 45202–0960.
2. CONTRACTOR SHALL BE RESPONSIBLE FOR ALL DAMAGES TO ELECTRIC FACILITIES DURING CONSTRUCTION.
3. ELECTRIC FACILITIES TO BE KEPT IN SERVICE AT ALL TIMES.
4. CONTRACTOR SHALL BE RESPONSIBLE FOR SUPPORTING EXISTING ELECTRIC FACILITIES AFFECTED BY THE PROPOSED CONSTRUCTION.
   (A) WHERE HIGH PRESSURE OIL FILLED PIPE TYPE CABLE INSTALLATION ARE EXPOSED OR OTHERWISE INTERFERED WITH BY THE CONTRACTOR, PROTECTION BY THE CONTRACTOR WILL BE REQUIRED AGAINST DAMAGE TO THE COATING SURROUNDING THERMAL SAND ENVELOPE.
   (B) WHERE CONCRETE ENCASED CONDUIT SYSTEMS OR DIRECT BURIED CABLE SYSTEMS ARE EXPOSED OR OTHERWISE INTERFERED WITH, THE CONTRACTOR SHALL PROTECT THE SYSTEM AS NECESSARY AGAINST DAMAGE. AS SOON AS FEASIBLE, THE CONTRACTOR SHALL TAKE ADDITIONAL APPROPRIATE STEPS TO PROVIDE PERMANENT MEASURES TO RESTORE SUPPORT. THE METHODS USED SHALL BE BASED ON CONDITIONS TO BE DETERMINED BY THE UTILITY.
   (C) WHERE POLES OR ANCHORS THAT SUPPORT OVERHEAD ELECTRIC FACILITIES ARE EXPOSED OR OTHERWISE INTERFERED WITH, THE CONTRACTOR SHALL PROTECT THEM FROM DAMAGE AND PROVIDE TEMPORARY SUPPORT TO INSURE THE INTEGRITY OF THE SYSTEM. AS SOON AS FEASIBLE, THE CONTRACTOR SHALL TAKE ADDITIONAL APPROPRIATE STEPS TO PROVIDE PERMANENT MEASURES TO RESTORE SUPPORT. THE METHODS USED SHALL BE BASED ON CONDITIONS TO BE DETERMINED BY THE UTILITY.
   (D) WHERE THE DEPTH OF EXCAVATION FOR THE PROPOSED WORK IS GREATER THAN FIVE (5) FEET, THE CONTRACTOR SHALL SHEET AND SHORE THE TRENCH TO CONTINUOUSLY MAINTAIN THE SUPPORT OF ELECTRIC FACILITIES AT LOCATION WHERE THE ELECTRIC FACILITIES ARE WITHIN THE ZONE OF INFLUENCE ADJACENT TO THE EXCAVATION AS DETERMINED BY THE NATURAL ANGLE OF REPOSE OF THE SOIL.
   (E) ALL DAMAGE TO ELECTRIC FACILITIES AND SERVICES REQUIRING ADJUSTMENTS, RELOCATION AND/OR REPAIRS WILL BE MADE AT CONTRACTOR'S COST.
5. CONTRACTOR SHALL NOT BACK FILL EXPOSED ELECTRIC FACILITIES UNTIL THE COMPANY HAS INSPECTED IT'S FACILITY OR PERFORMED ANY ADJUSTMENTS AND/OR MAINTENANCE THAT MAY BE REQUIRED.

NOTE: SHOULD CONTRACTOR DAMAGE ELECTRIC FACILITIES, CONTRACTOR SHALL IMMEDIATELY NOTIFY THE DUKE ENERGY CALL CENTER AT (513)421–9500. CONTRACTOR SHALL KEEP EVERYONE CLEAR OF DAMAGED ELECTRIC FACILITIES UNTIL COMPANY PERSONNEL ARRIVE AT THE WORK SITE.

SEE BID SHEETS FOR RESTORATION SPECIFICATIONS

CONCRETE DRIVES & WALKS | MILL & RESURFACE | GRAVEL DRIVE | BLACKTOP DRIVES

VIOX&VIOX
Civil Engineers, Surveyors, and Landscape Architects
466 Erlanger Road • Erlanger, Kentucky 41018
Ph (859)727-3293 • Fax (859) 727-8452 • www.vioxinc.com

KENTUCKY 811
CALL 811 TWO WORKING DAYS BEFORE YOU DIG

SHEET INDEX

1 TITLE SHEET/GENERAL NOTES
2–3 BIRD ROAD
4–5 NORTHCUTT ROAD
6 DETAILS

* ALL SUBMITTALS MAY NOT INCLUDE ENTIRE SET OF DRAWINGS

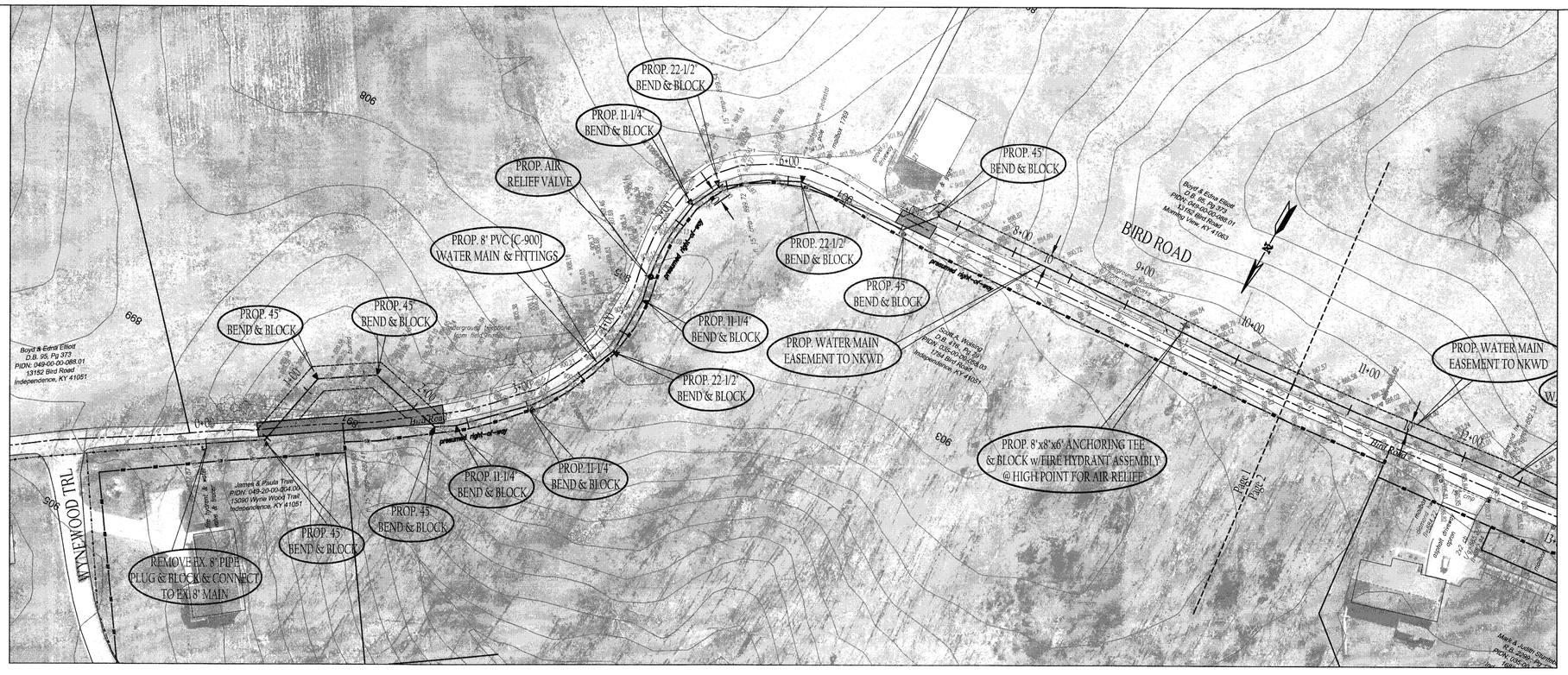

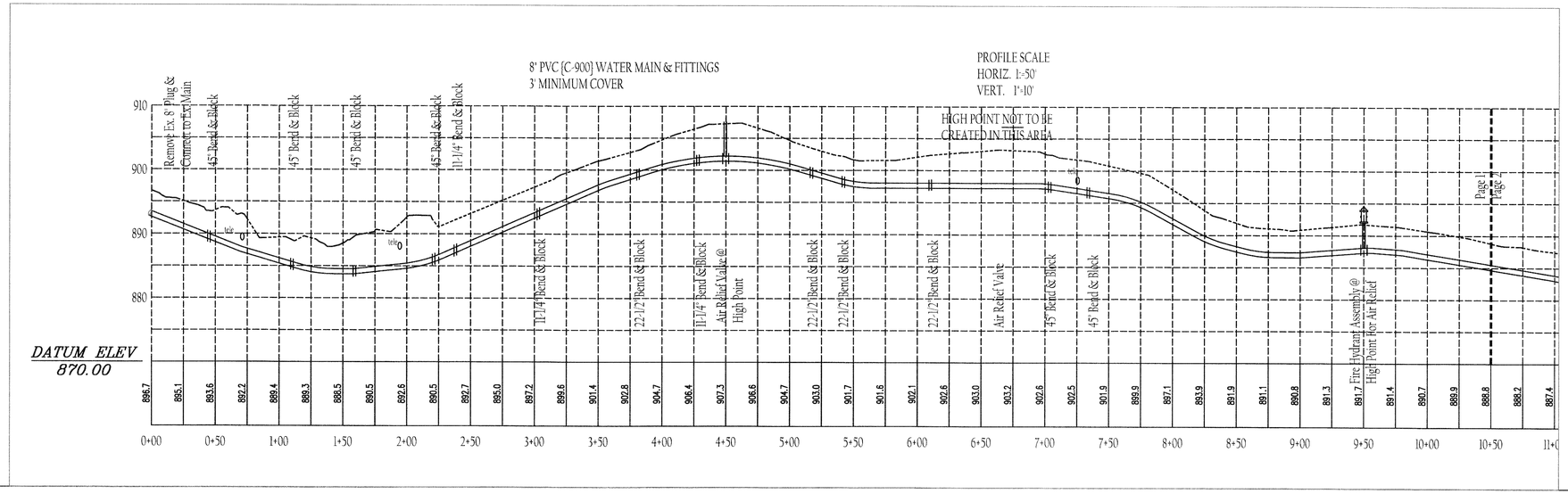

PLAN SCALE
1"=50'

REVISIONS
REV. 11-11-13 - PER NKWD

PROPOSED 8" WATER MAIN EXTENSION
BIRD ROAD {Wynewood Trail to End}
KENTON COUNTY, KENTUCKY

VIOX&VIOX
Civil Engineers, Surveyors, and Landscape Architects
466 Erlanger Road • Erlanger, Kentucky 41018
Ph. (859) 727-3293 • Fax (859) 727-9452 • www.vioxinc.com

Stamp

REF. JHV/mae	PROJECT NO. 100-511-003
SCALE as shown	DATE 6/1/13
DRAWING P:\NKWD\0005\Sub-District 1-RFP\11003\Engineering\DWG\NKWD-Bird-2013.	

This drawing and the design concepts represented as instruments of service are the sole property of Viox & Viox, Inc. and may not be used, reproduced, or copied for any purpose without the prior written authorization of Viox & Viox, Inc.

P:\NKWD (005)\SUB-DISTRICT 1 - RFP (11003)\Engineering\DWG\NKWD-BIRD-2013.dwg, 11/21/2013 9:13:34 AM, PDF995-Rev.pc3

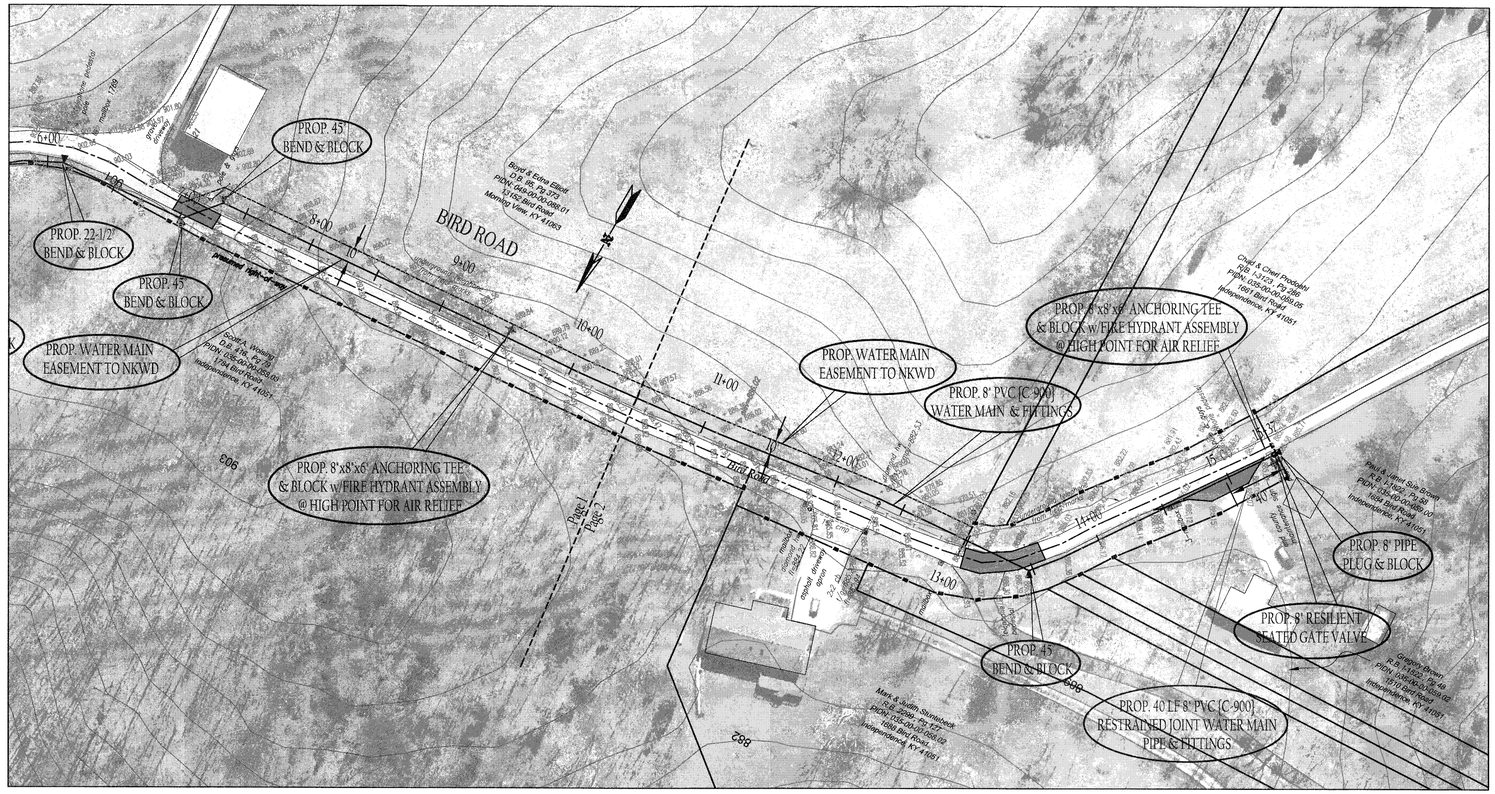

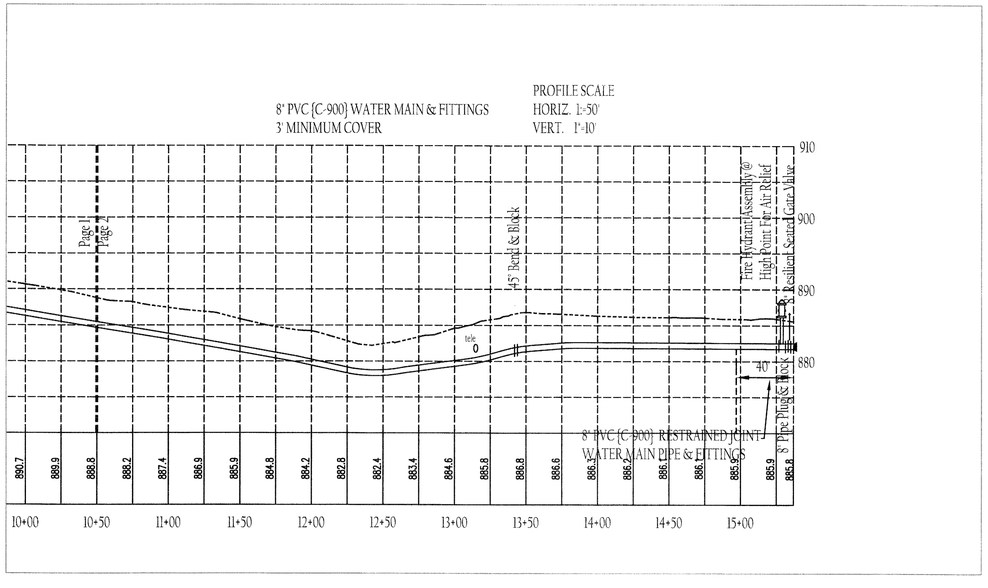

PLAN SCALE
1"=50'

REVISIONS
REV. 11-11-13 - PER NKWD

PROPOSED 8" WATER MAIN EXTENSION
BIRD ROAD {Wynewood Trail to End}
KENTON COUNTY, KENTUCKY

VIOX&VIOX
Civil Engineers, Surveyors, and Landscape Architects
466 Erlanger Road • Erlanger, Kentucky 41018
Ph (859) 727-5285 • Fax (859) 727-5452 • www.vioxinc.com

Stamp

REF. JHV/mae	PROJECT NO. 100-511-003
SCALE as shown	DATE 6/1/13
DRAWING P:\NKWD\000\Sub-District 1-RFP\11003\Engineering\DWG\NKWD-Bird-2013	

This drawing and the design concepts represented as instruments of service are the sole property of Viox & Viox, Inc. and may not be used, reproduced, or copied for any purpose without the prior written authorization of Viox & Viox, Inc.

P:\NKWD (005)\SUB-DISTRICT 1 - RFP (11003)\Engineering\DWG\NKWD-BIRD-2013.dwg, 11/21/2013 9:12:19 AM, PDF995-Rev.pc3

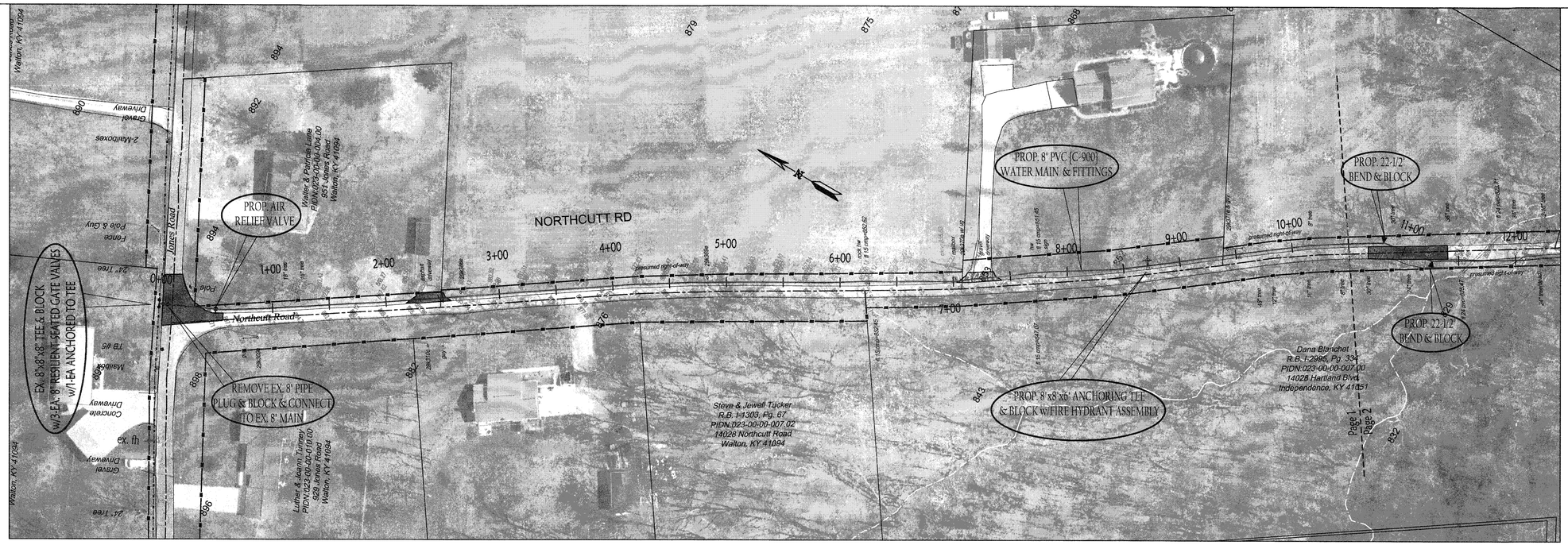

PLAN SCALE
1"=50'

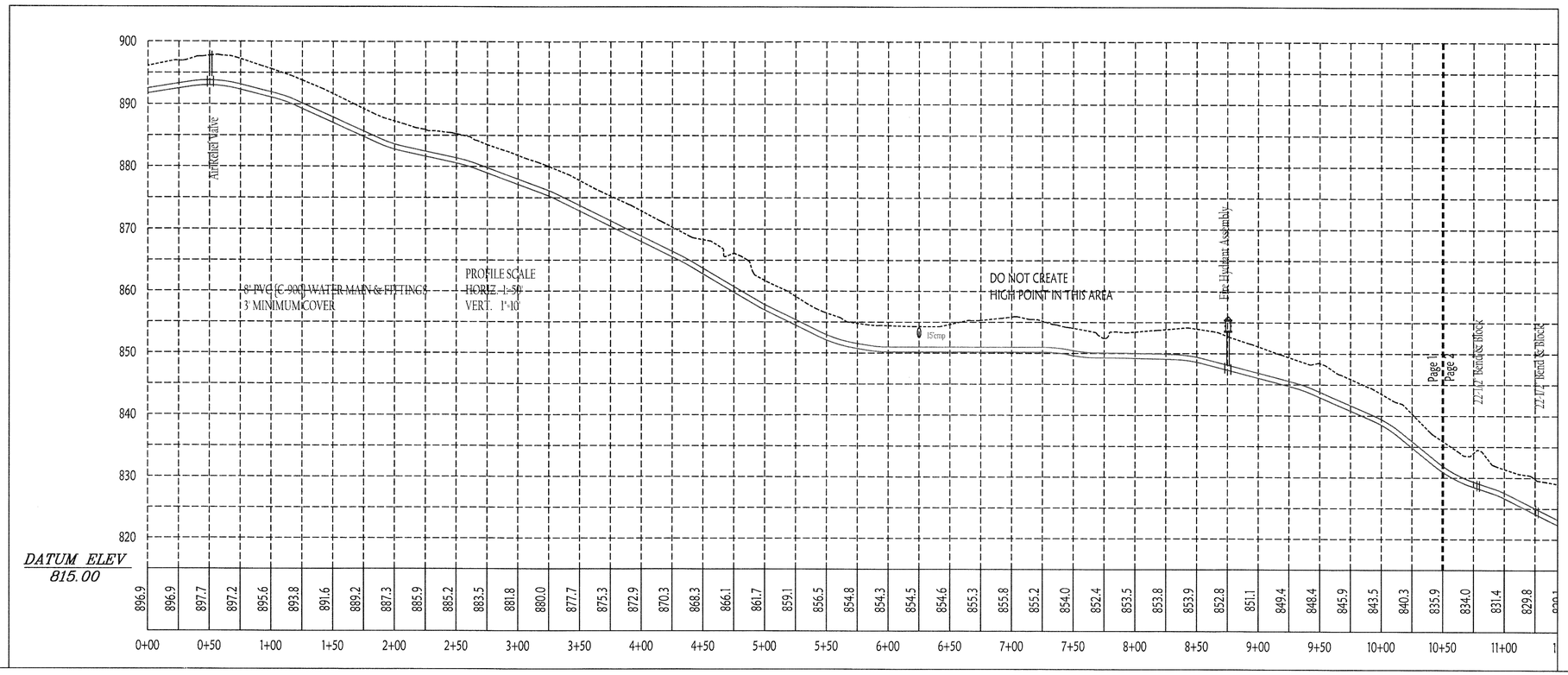

EPSC LEGEND

SF-IP	SILT FENCE INLET PROTECTION
▲	DITCH CHECK
--SF--	SILT FENCE

EROSION CONTROL NOTES:

1. EXISTING VEGETATION SHALL BE PRESERVED WHERE POSSIBLE. ALL DISTURBED AREAS OF THE SITE SHALL BE STABILIZED. STABILIZATION SHALL BEGIN WITHIN 14 DAYS ON AREAS OF THE SITE WHERE CONSTRUCTION ACTIVITIES HAVE PERMANENTLY OR TEMPORARILY (FOR 21 DAYS OF MORE) CEASES. WHEN SNOW COVER CAUSES DELAYS, STABILIZATION SHALL BEGIN AS SOON AS POSSIBLE.
2. CONTRACTOR SHALL INSPECT THE BMP'S AT LEAST EVERY 7 DAYS AND AFTER A RAIN EVENT OF 0.5" AND GREATER.
3. BEST MANAGEMENT PARCTICES (BMPs) SHOWN ON PLAN SHALL BE REVISED OR IMPLEMENTED AS DEEMED NECESSARY.
4. ALL MAJOR GRADING ACTIVITIES AND INSPECTION LOGS SHALL BE RECORDED IN THE SWPPP BOOK THAT IS TO BE KEPT ON SITE.
5. INSPECTION OF BMP'S SHALL BE PERFORMED ON A WEEKLY BASIS BY A KEPSC CERTIFIED INSPECTOR.

REVISIONS

REV. 11-11-13 - PER NKWD

PROPOSED 8" WATER MAIN EXTENSION
NORTHCUTT ROAD
KENTON COUNTY, KENTUCKY

VIOX&VIOX
Civil Engineers, Surveyors, and Landscape Architects
466 Erlanger Road • Erlanger, Kentucky 41018
Ph (859) 727-3293 • Fax (859) 727-8452 • www.vioxinc.com

Stamp

REF: JHV/mae
PROJECT NO.: 100-511-003
SCALE: as shown
DATE: 6/1/13
DRAWING: P:\NKWD\005\Sub-District I-RFP\11003\Engineering\DWG\NKWD-Northcut.dwg

This drawing and the design concepts represented as instruments of service are the sole property of Viox & Viox, Inc. and may not be used, reproduced, or copied for any purpose without the prior written authorization of Viox & Viox, Inc.

P:\NKWD (005)\SUB-DISTRICT I - RFP (11003)\Engineering\DWG\NKWD-NORTHCUT.dwg, 11/21/2013 9:03:38 AM, PDF995-Rev.pc3

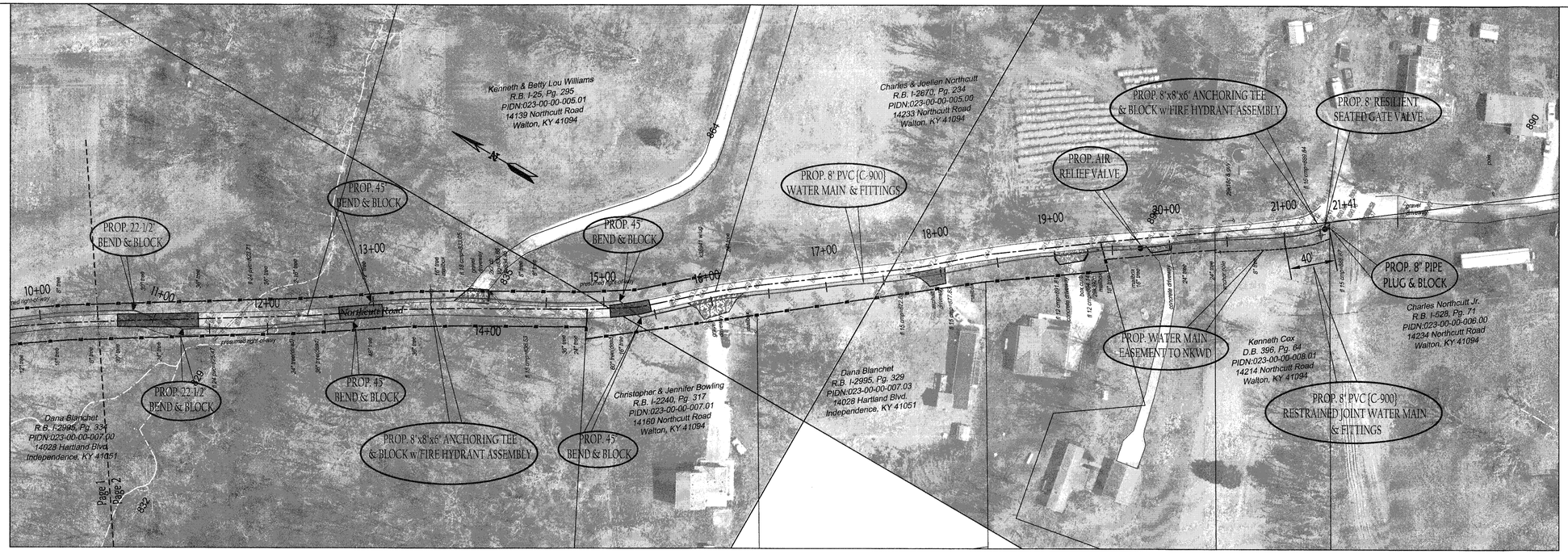

PLAN SCALE
1"=50'

EPSC LEGEND

SF-IP	SILT FENCE INLET PROTECTION
▲	DITCH CHECK
--SF--	SILT FENCE

EROSION CONTROL NOTES:

1. EXISTING VEGETATION SHALL BE PRESERVED WHERE POSSIBLE. ALL DISTURBED AREAS OF THE SITE SHALL BE STABILIZED. STABILIZATION SHALL BEGIN WITHIN 14 DAYS ON AREAS OF THE SITE WHERE CONSTRUCTION ACTIVITIES HAVE PERMANENTLY OR TEMPORARILY (FOR 21 DAYS OF MORE) CEASES. WHEN SNOW COVER CAUSES DELAYS, STABILIZATION SHALL BEGIN AS SOON AS POSSIBLE.
2. CONTRACTOR SHALL INSPECT THE BMP'S AT LEAST EVERY 7 DAYS AND AFTER A RAIN EVENT OF 0.5" AND GREATER.
3. BEST MANAGEMENT PARCTICES (BMPs) SHOWN ON PLAN SHALL BE REVISED OR IMPLEMENTED AS DEEMED NECESSARY.
4. ALL MAJOR GRADING ACTIVITIES AND INSPECTION LOGS SHALL BE RECORDED IN THE SWPPP BOOK THAT IS TO BE KEPT ON SITE.
5. INSPECTION OF BMP'S SHALL BE PERFORMED ON A WEEKLY BASIS BY A KEPSC CERTIFIED INSPECTOR.

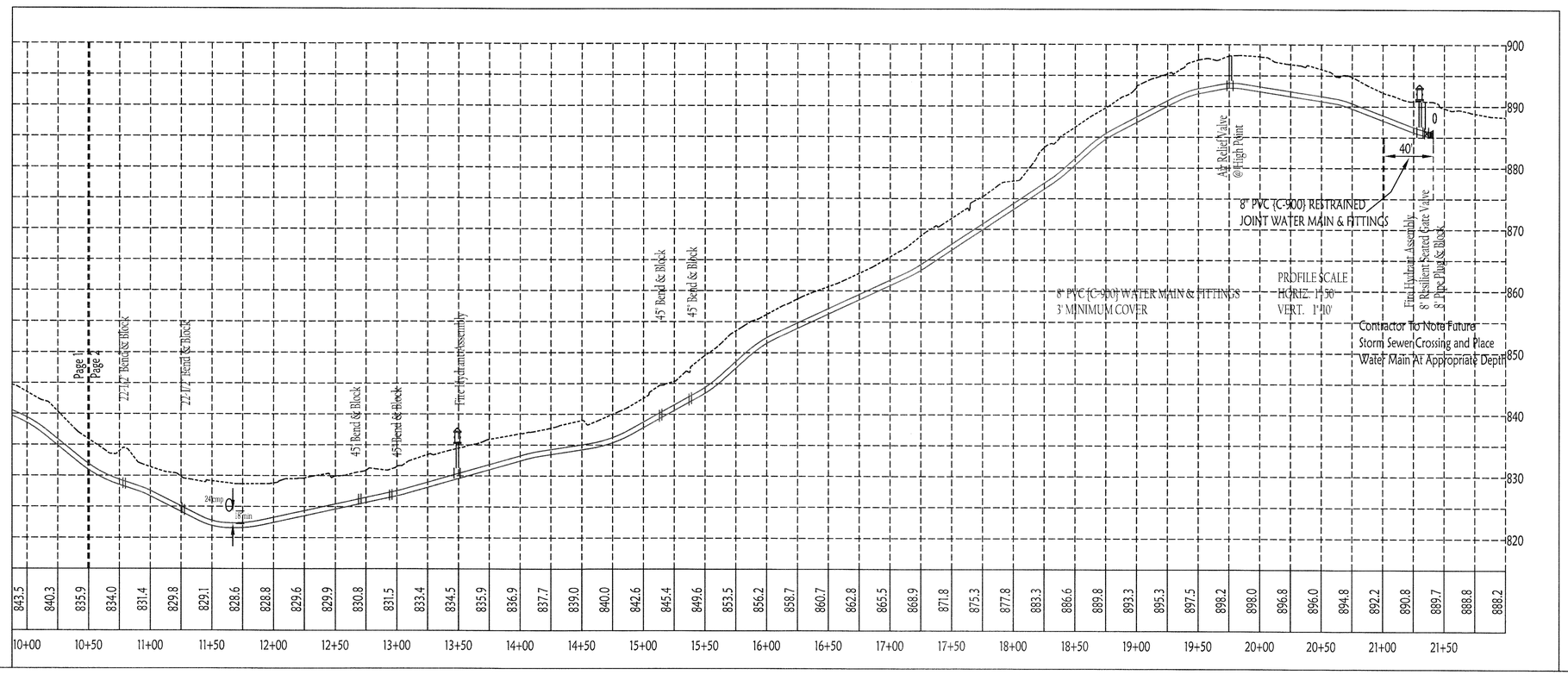

This drawing and the design concepts represented as instruments of service are the sole property of Viox & Viox, Inc. and may not be used, reproduced, or copied for any purpose without the prior written authorization of Viox & Viox, Inc.

REVISIONS

REV. 11-11-13 - PER NKWD

PROPOSED 8" WATER MAIN EXTENSION
NORTHCUTT ROAD
KENTON COUNTY, KENTUCKY

VIOX&VIOX
Civil Engineers, Surveyors, and Landscape Architects
466 Erlanger Road • Erlanger, Kentucky 41018
Ph. (859) 727-2928 • Fax: (859) 727-9452 • www.vioxinc.com

Stamp

STATE OF KENTUCKY LICENSED PROFESSIONAL ENGINEER
3/3/14

REF. JHV/mae	PROJECT NO. 100-511-003
SCALE as shown	DATE 6/1/13
DRAWING P:\NKWD\005\Sub-District 1-RFP\11003\Engineering\DWG\NKWD-Northcut.dwg	

P:\NKWD (005)\SUB-DISTRICT 1 - RFP (11003)\Engineering\DWG\NKWD-NORTHCUT.dwg, 11/21/2013 9:05:31 AM, PDF995-Rev.pc3

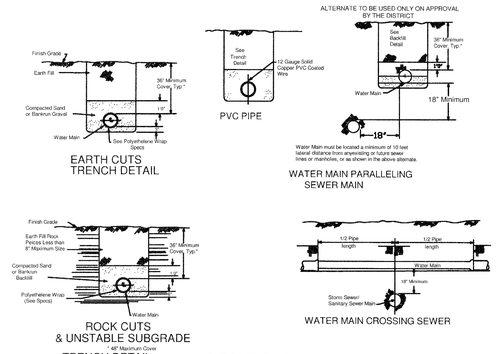

N. KY. WATER DISTRICT
TYPICAL PIPELINE TRENCH DETAIL
DRAWN BY: SAR
APPROVED:
DATED: 5/18/11
STANDARD DRAWING NO 103

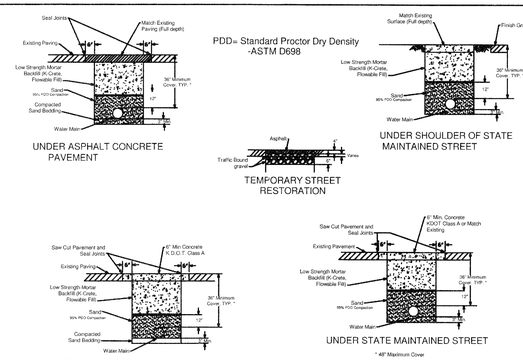

N. KY. WATER DISTRICT
TYPICAL PIPELINE TRENCH DETAIL
DRAWN BY: SAR
APPROVED:
DATED: 5/18/11
STANDARD DRAWING NO 103A

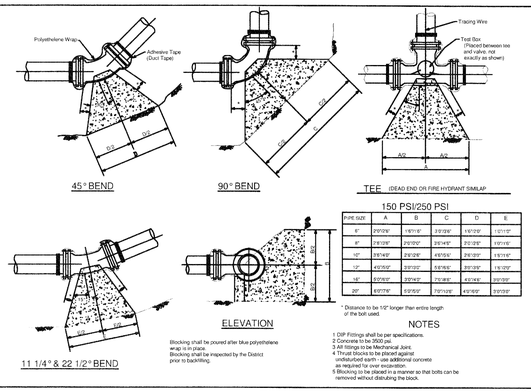

150 PSI/250 PSI

PIPE SIZE	A	B	C	D	E
6"	2'0"/2'6"	1'6"/1'8"	2'0"/2'6"	1'6"/2'0"	1'0"/1'2"
8"	2'6"/3'0"	2'0"/2'0"	2'6"/4'0"	2'0"/2'0"	1'0"/1'6"
10"	3'0"/4'0"	2'6"/2'6"	4'0"/5'0"	2'6"/3'0"	1'6"/1'6"
12"	4'0"/5'0"	3'0"/3'0"	5'0"/6'0"	3'0"/3'0"	1'6"/2'0"
16"	5'0"/6'0"	3'0"/4'0"	7'0"/8'0"	4'0"/4'0"	2'0"/3'0"
20"	6'0"/7'0"	3'0"/5'0"	7'0"/10'0"	4'0"/6'0"	3'0"/3'0"

* Distance to be 1/2" longer than entire length of the bolt used.

NOTES
1 DIP Fittings shall be per specifications.
2 Concrete to be 3000 psi.
3 All fittings to be Mechanical Joint.
4 Blocking shall be poured against undisturbed earth - use additional concrete as required for over excavation.
5 Blocking to be placed in a manner so that bolts can be removed without disturbing the block.

N. KY. WATER DISTRICT
CONCRETE THRUST BLOCK DETAIL
DRAWN BY: SAR
APPROVED:
DATED: 5/18/11
STANDARD DRAWING NO 104

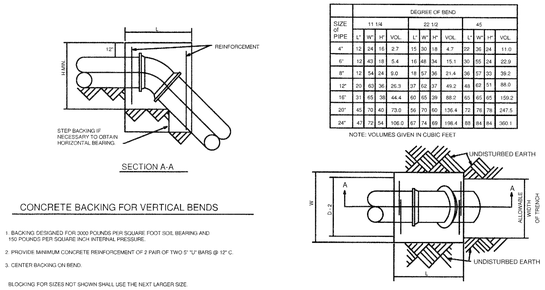

SIZE of PIPE	DEGREE OF BEND											
	11 1/4				22 1/2				45			
	L'	W'	H'	VOL.	L'	W'	H'	VOL.	L'	W'	H'	VOL.
4"	12	24	18	2.7	11	30	18	4.7	22	36	24	11.0
6"	12	43	18	5.4	16	48	24	15.1	30	55	24	22.9
8"	14	54	24	9.0	19	57	36	21.4	36	77	30	38.2
12"	20	65	36	26.3	27	82	37	49.2	48	88	51	88.0
16"	31	85	39	44.4	40	85	39	88.0	55	85	45	159.2
20"	45	70	40	73.0	56	75	60	136.4	72	75	78	247.5
24"	47	75	54	106.0	67	74	69	196.4	89	84	84	360.1

NOTE: VOLUMES GIVEN IN CUBIC FEET

N. KY. WATER DISTRICT
CONCRETE THRUST BLOCKING FOR VERTICAL BENDS
DRAWN BY: SAR
APPROVED:
DATED: 5/18/11
STANDARD DRAWING NO 104A

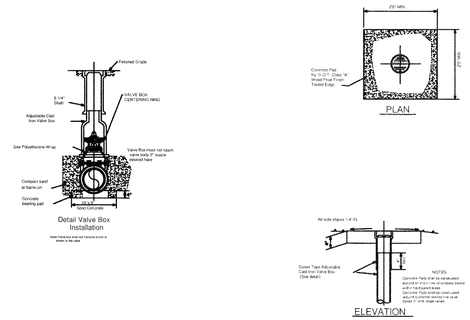

N. KY. WATER DISTRICT
VALVE BOX AND VALVE PAD DETAIL
DRAWN BY: SAR
APPROVED:
DATED: 5/18/11
STANDARD DRAWING NO 105

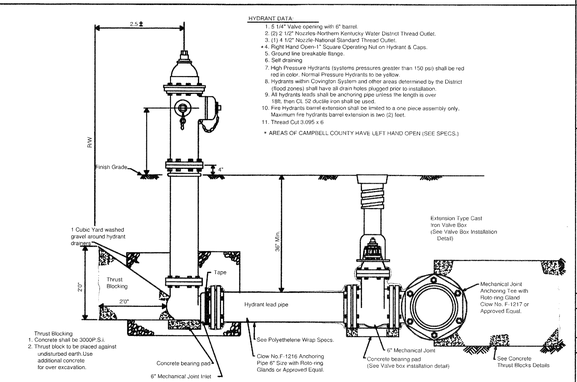

N. KY. WATER DISTRICT
HYDRANT ASSEMBLY
DRAWN BY: SAR
APPROVED:
DATED: 5/18/11
STANDARD DRAWING NO 109

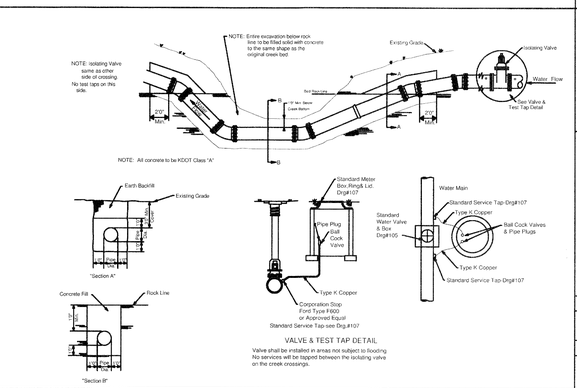

N. KY. WATER DISTRICT
CONCRETE ENCASEMENT AT CREEK CROSSING
DRAWN BY: SAR
APPROVED:
DATED: 5/18/11
STANDARD DRAWING NO 110

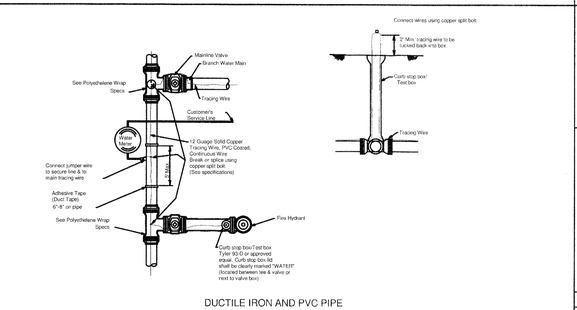

N. KY. WATER DISTRICT
TRACING WIRE INSTALLATION DETAIL
DRAWN BY: SAR
APPROVED:
DATED: 5/18/11
STANDARD DRAWING NO 111

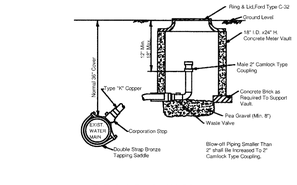

N. KY. WATER DISTRICT
TYPICAL FLUSHING DEVICE INSTALLATION
DRAWN BY: SAR
APPROVED:
DATED: 5/18/11
STANDARD DRAWING NO 113

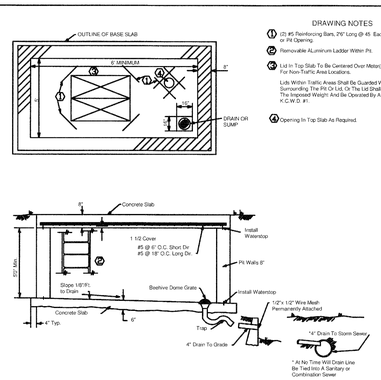

N. KY. WATER DISTRICT
TYPICAL PIT DETAIL
DRAWN BY: SAR
APPROVED:
DATED: 5/18/11
STANDARD DRAWING NO 202

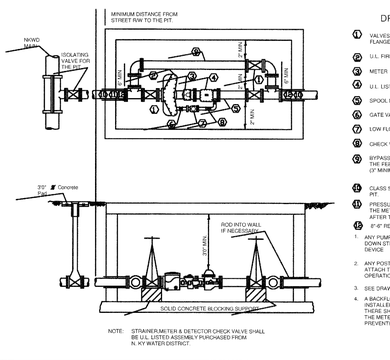

N. KY. WATER DISTRICT
6" FIRE RATED METER SETTING 2" FIRE RATED METER SETTING 2" PRIVATE FIRE & DOMESTIC WATER SERVICE
DRAWN BY: SAR
APPROVED:
DATED: 1/5/18
STANDARD DRAWING NO 208

NOTE:
DETAILS PROVIDED ON THIS SHEET ARE FOR REFERENCE ONLY. CONTRACTOR TO REFER TO THE MOST CURRENT NKWD STANDARD SPECIFICATIONS AND DRAWINGS FOUND AT **www.nkywater.org**

REVISIONS

DETAIL SHEET
NORTHERN KENTUCKY WATER DISTRICT
KENTON COUNTY, KENTUCKY

VIOX&VIOX
Civil Engineers, Surveyors, and Landscape Architects
466 Erlanger Road • Erlanger, Kentucky 41018
Ph (859) 727-3293 • Fax (859) 727-8452 • www.vioxinc.com

Stamp

REF	PROJECT NO.
M.A.F.	100-511-003
SCALE: AS SHOWN	DATE: 6/12/12
DRAWING: N:\NKWD 00#\SUB-DISTRICT-A\2011-DETAILSHEET-SUB-LONG	