Duke Energy Kentucky
Case No. 2009-00202
Forecasted Test Period Filing Requirements
Table of Contents

Vol. #	Tab #	Filing Requirement	Description	Sponsoring Witness
1	1	KRS 278.180	30 days' notice of rates to PSC.	Julia S. Janson
1	2	807 KAR 5:001 Section 8 (1)	Full name and P.O. address of applicant and reference to the particular provision of law requiring PSC approval.	Julia S. Janson
1	3	807 KAR 5:001 Section 8 (2)	The original and 10 copies of application plus copy for anyone named as interested party.	Julia S. Janson
1	4	807 KAR 5:001 Section 10 (1)(b)(1)	Reason adjustment is required.	William Don Wathen
1	5	807 KAR 5:001 Section 10 (1)(b)(2)	Statement that utility's annual reports, including the most recent calendar year, are filed with PSC. 807 KAR 5:006, Section 3 (1).	Brenda R. Melendez
1	6	807 KAR 5:001 Section 10 (1)(b)(3) and (5)	If utility is incorporated, certified copy of articles of incorporation and amendments or out of state documents of similar import. If they have already been filed with PSC refer to the style and case number of the prior proceeding and file a certificate of good standing or authorization dated within 60 days of date application filed.	Julia S. Janson
1	7	807 KAR 5:001 Section 10 (1)(b)(4)	If applicant is limited partnership, certified copy of limited partnership agreement. If agreement filed with PSC refer to style and case number of prior proceeding and file a certificate of good standing or authorization dated within 60 days of date application filed.	Julia S. Janson
1	8	807 KAR 5:001 Section 10 (1)(b)(6)	Certified copy of certificate of assumed name required by KRS 365.015 or statement that certificate not necessary.	Julia S. Janson
1	9	807 KAR 5:001 Section 10 (1)(b)(7)	Proposed tariff in form complying with 807 KAR 5:011 effective not less than 30 days from date application filed.	James E. Ziolkowski
1	10	807 KAR 5:001 Section 10 (1)(b)(8)	Proposed tariff changes shown by present and proposed tariffs in comparative form or by indicating additions in italics or by underscoring and striking over deletions in current tariff.	James E. Ziolkowski
1	11	807 KAR 5:001 Section 10 (1)(b)(9)	Statement that notice given, see subsections (3) and (4) of 807 KAR 5:001, Section 10 with copy.	Julia S. Janson
1	12	807 KAR 5:001 Section 10 (2)	If gross annual revenues exceed $1,000,000, written notice of intent filed at least 4 weeks prior to application. Notice shall state whether application will be supported by historical or fully forecasted test period.	Julia S. Janson
1	13	807 KAR 5:001 Section 10 (4) (a)	Sewer utilities shall give the required typewritten notice by mail to all of their customers pursuant to KRS 278.185.	Julia S. Janson
1	14	807 KAR 5:001 Section 10 (4)(b)	Applicants with twenty (20) or fewer customers affected by the proposed general rate adjustment shall mail the required typewritten notice to each customer no later than the date the application is filed with the commission.	Julia S. Janson

Duke Energy Kentucky
Case No. 2009-00202
Forecasted Test Period Filing Requirements
Table of Contents

Vol. #	Tab #	Filing Requirement	Description	Sponsoring Witness
1	15	807 KAR 5:001 Section 10 (4)(c)	Except for sewer utilities, applicants with more than twenty (20) customers affected by the proposed general rate adjustment shall give the required notice by one (1) of the following methods: 1. A typewritten notice mailed to all customers no later than the date the application is filed with the commission; 2. Publishing the notice in a trade publication or newsletter which is mailed to all customers no later than the date on which the application is filed with the commission; or 3. Publishing the notice once a week for three (3) consecutive weeks in a prominent manner in a newspaper of general circulation in the utility's service area, the first publication to be made within seven (7) days of the filing of the application with the commission.	Julia S. Janson
1	16	807 KAR 5:001 Section 10 (4)(d)	If notice is published, an affidavit from the publisher verifying that the notice was published, including the dates of the publication with an attached copy of the published notice, shall be filed with the Commission no later than forty-five (45) days of the filed date of the application.	Julia S. Janson
1	17	807 KAR 5:001 Section 10 (4)(e)	If notice is mailed, a written statement signed by the utility's chief officer in charge of Kentucky operations verifying the notice was mailed shall be filed with the Commission no later than thirty (30) days of the filed date of the application.	Julia S. Janson
1	18	807 KAR 5:001 Section 10 (4)(f)	All utilities, in addition to the above notification, shall post a sample copy of the required notification at their place of business no later than the date on which the application is filed which shall remain posted until the commission has finally determined the utility's rates.	Julia S. Janson
1	19	807 KAR 5:001 Section 10 (5)	Notice of hearing scheduled by the commission upon application by a utility for a general adjustment in rates shall be advertised by the utility by newspaper publication in the areas that will be affected in compliance with KRS 424.300.	Julia S. Janson
1	20	807 KAR 5:001 Section 10 (8)(a)	Financial data for forecasted period presented as pro forma adjustments to base period.	Robert M. Parsons, Jr.
1	21	807 KAR 5:001 Section 10 (8)(b)	Forecasted adjustments shall be limited to the 12 months immediately following the suspension period.	Robert M. Parsons, Jr.
1	22	807 KAR 5:001 Section 10 (8)(c)	Capitalization and net investment rate base shall be based on a 13 month average for the forecasted period.	Robert M. Parsons, Jr.

Duke Energy Kentucky
Case No. 2009-00202
Forecasted Test Period Filing Requirements
Table of Contents

Vol. #	Tab #	Filing Requirement	Description	Sponsoring Witness
1	23	807 KAR 5:001 Section 10 (8)(d)	After an application based on a forecasted test period is filed, there shall be no revisions to the forecast, except for the correction of mathematical errors, unless such revisions reflect statutory or regulatory enactments that could not, with reasonable diligence, have been included in the forecast on the date it was filed. There shall be no revisions filed within thirty (30) days of a scheduled hearing on the rate application.	Robert M. Parsons, Jr.
1	24	807 KAR 5:001 Section 10 (8)(e)	The commission may require the utility to prepare an alternative forecast based on a reasonable number of changes in the variables, assumptions, and other factors used as the basis for the utility's forecast.	Robert M. Parsons, Jr.
1	25	807 KAR 5:001 Section 10 (8)(f)	Reconciliation of rate base and capital used to determine revenue requirements.	Robert M. Parsons, Jr.
1	26	807 KAR 5:001 Section 10 (9)(a)	Prepared testimony of each witness supporting its application including testimony from chief officer in charge of Kentucky operations on the existing programs to achieve improvements in efficiency and productivity, including an explanation of the purpose of the program.	All witnesses
1	27	807 KAR 5:001 Section 10 (9)(b)	Most recent capital construction budget containing at minimum 3 year forecast of construction expenditures.	Gary J. Hebbeler
1	28	807 KAR 5:001 Section 10 (9)(c)	Complete description, which may be in prefiled testimony form, of all factors used to prepare forecast period. All econometric models, variables, assumptions, escalation factors, contingency provisions, and changes in activity levels shall be quantified, explained, and properly supported.	Stephen R. Lee
1	29	807 KAR 5:001 Section 10 (9)(d)	Annual and monthly budget for the 12 months preceding filing date, base period and forecasted period.	Stephen R. Lee
1	30	807 KAR 5:001 Section 10 (9)(e)	Attestation signed by utility's chief officer in charge of Kentucky operations providing: 1. That forecast is reasonable, reliable, made in good faith and that all basic assumptions used have been identified and justified; and 2. That forecast contains same assumptions and methodologies used in forecast prepared for use by management, or an identification and explanation for any differences; and 3. That productivity and efficiency gains are included in the forecast.	Julia S. Janson
1	31	807 KAR 5:001 Section 10 (9)(f)	For each major construction project constituting 5% or more of annual construction budget within 3 year forecast, following information shall be filed: 1. Date project began or estimated starting date; 2. Estimated completion date; 3. Total estimated cost of construction by year	Gary J. Hebbeler

Duke Energy Kentucky
Case No. 2009-00202
Forecasted Test Period Filing Requirements
Table of Contents

Vol. #	Tab #	Filing Requirement	Description	Sponsoring Witness
			exclusive and inclusive of Allowance for Funds Used During construction ("AFUDC") or Interest During construction Credit; and 4. Most recent available total costs incurred exclusive and inclusive of AFUDC or Interest During Construction Credit.	
1	32	807 KAR 5:001 Section 10 (9)(g)	For all construction projects constituting less than 5% of annual construction budget within 3 year forecast, file aggregate of information requested in paragraph (f) 3 and 4 of this subsection.	Gary J. Hebbeler
1	33	807 KAR 5:001 Section 10 (9)(h)	Financial forecast for each of 3 forecasted years included in capital construction budget supported by underlying assumptions made in projecting results of operations and including the following information: 1. Operating income statement (exclusive of dividends per share or earnings per share); 2. Balance sheet; 3. Statement of cash flows; 4. Revenue requirements necessary to support the forecasted rate of return; 5. Load forecast including energy and demand (electric); 6. Access line forecast (telephone); 7. Mix of generation (electric); 8. Mix of gas supply (gas); 9. Employee level; 10. Labor cost changes; 11. Capital structure requirements; 12. Rate base; 13. Gallons of water projected to be sold (water); 14. Customer forecast (gas, water); 15. MCF sales forecasts (gas); 16. Toll and access forecast of number of calls and number of minutes (telephone); and 17. A detailed explanation of any other information provided.	Stephen R. Lee Stephen G. De May #6, #13, #16 & #17 Not applicable
1	34	807 KAR 5:001 Section 10 (9)(i)	Most recent FERC or FCC audit reports.	Brenda R. Melendez
1	35	807 KAR 5:001 Section 10 (9)(j)	Prospectuses of most recent stock or bond offerings.	Stephen G. De May
1	36	807 KAR 5:001 Section 10 (9)(k)	Most recent FERC Form 1 (electric), FERC Form 2 (gas), or the Automated Reporting Management Information System Report (telephone) and PSC Form T (telephone).	Brenda R. Melendez
2	37	807 KAR 5:001 Section 10 (9)(l)	Annual report to shareholders or members and statistical supplements for the most recent 5 years prior to application filing date.	Stephen G. De May
2	38	807 KAR 5:001 Section 10 (9)(m)	Current chart of accounts if more detailed than Uniform System of Accounts charts.	Brenda R. Melendez

Duke Energy Kentucky
Case No. 2009-00202
Forecasted Test Period Filing Requirements
Table of Contents

Vol. #	Tab #	Filing Requirement	Description	Sponsoring Witness
2	39	807 KAR 5:001 Section 10 (9)(n)	Latest 12 months of the monthly managerial reports providing financial results of operations in comparison to forecast.	Stephen R. Lee
2	40	807 KAR 5:001 Section 10 (9)(o)	Complete monthly budget variance reports, with narrative explanations, for the 12 months prior to base period, each month of base period, and subsequent months, as available.	Stephen R. Lee
3	41	807 KAR 5:001 Section 10 (9)(p)	SEC's annual report for most recent 2 years, Form 10-Ks and any Form 8-Ks issued during prior 2 years and any Form 10-Qs issued during past 6 quarters.	Stephen G. De May
4	42	807 KAR 5:001 Section 10 (9)(q)	Independent auditor's annual opinion report, with any written communication which indicates the existence of a material weakness in internal controls.	Stephen G. De May
4	43	807 KAR 5:001 Section 10 (9)(r)	Quarterly reports to the stockholders for the most recent 5 quarters.	David L. Doss
4	44	807 KAR 5:001 Section 10 (9)(s)	Summary of latest depreciation study with schedules itemized by major plant accounts, except that telecommunications utilities adopting PSC's average depreciation rates shall identify current and base period depreciation rates used by major plant accounts. If information has been filed in another PSC case, refer to that case's number and style.	John J. Spanos
4	45	807 KAR 5:001 Section 10 (9)(t)	List all commercial or in-house computer software, programs, and models used to develop schedules and work papers associated with application. Include each software, program, or model; its use; identify the supplier of each; briefly describe software, program, or model; specifications for computer hardware and operating system required to run program	Robert M. Parsons, Jr.
4	46	807 KAR 5:001 Section 10 (9)(u)	If utility had any amounts charged or allocated to it by affiliate or general or home office or paid any monies to affiliate or general or home office during the base period or during previous 3 calendar years, file: 1. Detailed description of method of calculation and amounts allocated or charged to utility by affiliate or general or home office for each allocation or payment; 2. method and amounts allocated during base period and method and estimated amounts to be allocated during forecasted test period; 3. Explain how allocator for both base and forecasted test period was determined; and 4. All facts relied upon, including other regulatory approval, to demonstrate that each amount charged, allocated or paid during base period is reasonable.	David L. Doss

Duke Energy Kentucky
Case No. 2009-00202
Forecasted Test Period Filing Requirements
Table of Contents

Vol. #	Tab #	Filing Requirement	Description	Sponsoring Witness
4	47	807 KAR 5:001 Section 10 (9)(v)	If gas, electric or water utility with annual gross revenues greater than $5,000,000, cost of service study based on methodology generally accepted in industry and based on current and reliable data from single time period.	Donald L. Storck
4	48	807 KAR 5:001 Section 10 (9)(w)	Local exchange carriers with fewer than 50,000 access lines need not file cost of service studies, except as specifically directed by PSC. Local exchange carriers with more than 50,000 access lines shall file: 1. Jurisdictional separations study consistent with Part 36 of the FCC's rules and regulations; and 2. Service specific cost studies supporting pricing of services generating annual revenue greater than $1,000,000 except local exchange access: a. Based on current and reliable data from single time period; and b. Using generally recognized fully allocated, embedded, or incremental cost principles.	Not applicable
4	49	807 KAR 5:001 Section 10 (10)(a)	Jurisdictional financial summary for both base and forecasted periods detailing how utility derived amount of requested revenue increase.	Robert M. Parsons, Jr.
4	50	807 KAR 5:001 Section 10 (10)(b)	Jurisdictional rate base summary for both base and forecasted periods with supporting schedules which include detailed analyses of each component of the rate base.	Robert M. Parsons, Jr.
4	51	807 KAR 5:001 Section 10 (10)(c)	Jurisdictional operating income summary for both base and forecasted periods with supporting schedules which provide breakdowns by major account group and by individual account.	Robert M. Parsons, Jr.
4	52	807 KAR 5:001 Section 10 (10)(d)	Summary of jurisdictional adjustments to operating income by major account with supporting schedules for individual adjustments and jurisdictional factors.	Robert M. Parsons, Jr.
4	53	807 KAR 5:001 Section 10 (10)(e)	Jurisdictional federal and state income tax summary for both base and forecasted periods with all supporting schedules of the various components of jurisdictional income taxes.	Robert M. Parsons
4	54	807 KAR 5:001 Section 10 (10)(f)	Summary schedules for both base and forecasted periods (utility may also provide summary segregating items it proposes to recover in rates) of organization membership dues; initiation fees; expenditures for country club; charitable contributions; marketing, sales, and advertising; professional services; civic and political activities; employee parties and outings; employee gifts; and rate cases.	Robert M. Parsons, Jr.
4	55	807 KAR 5:001 Section 10 (10)(g)	Analyses of payroll costs including schedules for wages and salaries, employee benefits, payroll taxes, straight time and overtime hours, and executive compensation by title.	Jay R. Alvaro

Duke Energy Kentucky
Case No. 2009-00202
Forecasted Test Period Filing Requirements
Table of Contents

Vol. #	Tab #	Filing Requirement	Description	Sponsoring Witness
4	56	807 KAR 5:001 Section 10 (10)(h)	Computation of gross revenue conversion factor for forecasted period.	Robert M. Parsons, Jr.
4	57	807 KAR 5:001 Section 10 (10)(i)	Comparative income statements (exclusive of dividends per share or earnings per share), revenue statistics and sales statistics for 5 calendar years prior to application filing date, base period, forecasted period, and 2 calendar years beyond forecast period.	Stephen R. Lee
4	58	807 KAR 5:001 Section 10 (10)(j)	Cost of capital summary for both base and forecasted periods with supporting schedules providing details on each component of the capital structure.	Stephen G. De May
4	59	807 KAR 5:001 Section 10 (10)(k)	Comparative financial data and earnings measures for the 10 most recent calendar years, base period, and forecast period.	Stephen R. Lee
4	60	807 KAR 5:001 Section 10 (10)(l)	Narrative description and explanation of all proposed tariff changes.	James E. Ziolkowski
4	61	807 KAR 5:001 Section 10 (10)(m)	Revenue summary for both base and forecasted periods with supporting schedules which provide detailed billing analyses for all customer classes.	James E. Ziolkowski
4	62	807 KAR 5:001 Section 10 (10)(n)	Typical bill comparison under present and proposed rates for all customer classes.	James E. Ziolkowski
4	63	807 KAR 5:001 Section (10)(3)	Amount of change requested in dollar amounts and percentage for each customer classification to which change will apply. a. Present and proposed rates for each customer class to which change would apply. b. Electric, gas, water and sewer utilities-the effect upon average bill for each customer class to which change would apply. c. Local exchange companies-include effect upon average bill for each customer class for change in basic local service.	James E. Ziolkowski
4	64	807 KAR 5:001 Section 10 (4)(c)(d)(e)(f)	If copy of public notice included, did it meet requirements?	Julia S. Janson
4	65	807 KAR 5:001 Section 6(1)	Amount and kinds of stock authorized.	Stephen G. De May
4	66	807 KAR 5:001 Section 6(2)	Amount and kinds of stock issued and outstanding.	Stephen G. De May
4	67	807 KAR 5:001 Section 6(3)	Terms of preference of preferred stock whether cumulative or participating, or on dividends or assets or otherwise.	Stephen G. De May
4	68	807 KAR 5:001 Section 6(4)	Brief description of each mortgage on property of applicant, giving date of execution, name of mortgagor, name of mortgagee, or trustee, amount of indebtedness authorized to be secured thereby, and the amount of indebtedness actually secured, together with any sinking fund provisions.	Stephen G. De May

Duke Energy Kentucky
Case No. 2009-00202
Forecasted Test Period Filing Requirements
Table of Contents

Vol. #	Tab #	Filing Requirement	Description	Sponsoring Witness
4	69	807 KAR 5:001 Section 6(5)	Amount of bonds authorized, and amount issued, giving the name of the public utility which issued the same, describing each class separately, and giving date of issue, face value, rate of interest, date of maturity and how secured, together with amount of interest paid thereon during the last fiscal year.	Stephen G. De May
4	70	807 KAR 5:001 Section 6(6)	Each note outstanding, giving date of issue, amount, date of maturity, rate of interest, in whose favor, together with amount of interest paid thereon during the last fiscal year.	Stephen G. De May
4	71	807 KAR 5:001 Section 6(7)	Other indebtedness, giving same by classes and describing security, if any, with a brief statement of the devolution or assumption of any portion of such indebtedness upon or by person or corporation if the original liability has been transferred, together with amount of interest paid thereon during the last fiscal year.	Stephen G. De May
4	72	807 KAR 5:001 Section 6(8)	Rate and amount of dividends paid during the five (5) previous fiscal years, and the amount of capital stock on which dividends were paid each year.	Stephen G. De May
4	73	807 KAR 5:001 Section 6(9)	Detailed income statement and balance sheet.	Robert M. Parsons, Jr.
5	-	807 KAR 5:001 Sction 10(10) (a) through (k)	Schedule Book (Schedules A-K)	Various
6	-	807 KAR 5:001 Sction 10(10) (l) through (n)	Schedule Book (Schedules L-N)	Various
7	-	-	Work papers	Various
8	-	807 KAR 5:001 Section 10(9)(a)	Testimony (Volume 1 of 2)	-
9	-	807 KAR 5:001 Section 10(9)(a)	Testimony (Volume 2 of 2)	-
10	-	KRS 278.2205(6)	Cost Allocation Manual	Brenda R. Melendez
-	-	807 KAR 5:056 Section 1(7)	Coal Contracts	Not Applicable-

STANDARD FILING REQUIREMENT SCHEDULES

KENTUCKY PUBLIC SERVICE COMMISSION

GAS CASE NO. 2009-00202

DATE: July 1, 2009

GENERAL APPLICATION FOR CHANGE IN
GAS RATES BEFORE KENTUCKY PUBLIC
SERVICE COMMISSION

NAME: DUKE ENERGY KENTUCKY
ADDRESS: 1697-A MONMOUTH STREET
NEWPORT, KENTUCKY 41071

MAILING
ADDRESS: P. O. BOX 960
CINCINNATI, OHIO 45201

TELEPHONE: AREA CODE 513 NUMBER 419-5908

COMPANY OFFICIAL TO BE CONTACTED
PERTAINING TO RATE CASE MATTERS William Don Wathen Jr.

FILING DATE: July 1, 2009

ATTORNEYS FOR APPLICANT:

NAME: Rocco D'Ascenzo

ADDRESS: P. O. Box 960
Cincinnati, Ohio 45202
TELEPHONE: (513) 419-1852

* * * FOR COMMISSION USE ONLY * * *

DATE RECEIVED BY COMMISSION _____

DOCKET NUMBER ASSIGNED _____

RECEIVED BY _____

DATE ACCEPTED _____

ACCEPTED BY _____

COMMONWEALTH OF KENTUCKY
BEFORE THE PUBLIC SERVICE COMMISSION

IN THE MATTER OF THE ADJUSTMENT
OF GAS RATES OF DUKE ENERGY KENTUCKY, INC.

CASE NO. 2009-00202

FILING REQUIREMENTS

VOLUME 10

DUKE ENERGY KENTUCKY, INC.
COST ALLOCATION MANUAL
2009

COST ALLOCATION MANUAL

DUKE ENERGY KENTUCKY

AFFIDAVIT OF JULIA S. JANSON

STATE OF OHIO)
)
COUNTY OF HAMILTON)

Now comes Julia S. Janson, President of Duke Energy Ohio, Inc. and President of Duke Energy Kentucky, Inc. ("Duke Energy Kentucky") and, and as required by KRS § 278.2205(3)(a) hereby attests as follows:

1. Duke Energy Kentucky has developed a Cost Allocation Manual ("CAM") in accordance with KRS § 2205(2); and

2. the CAM will be adopted by the management of Duke Energy Kentucky as required by KRS § 2205.

Further affiant sayeth naught.

Julia S. Janson, Affiant

Sworn and subscribed before me by Julia S. Janson on this 26 day of March, 2009.

NOTARY PUBLIC

My Commission Expires:

NOTARY PUBLIC STATE OF OHIO

ANITA M. SCHAFER
Notary Public, State of Ohio
My Commission Expires
November 4, 2009

227758

Cost Allocation Manual of Duke Energy Kentucky

Table of Contents

Tab

I. Introduction

II. CAM Requirements

A. **KRS 278.2205(2)(a)**: A list of regulated and non-regulated divisions within the utility

B. **KRS 278.2205(2)(b):** A list of all regulated and non-regulated affiliates of the utility to which the utility provides services or products and where the affiliates provide non-regulated activities as defined in KRS 278.010(21)

B-1. Regulated and Non-regulated Affiliate Companies of Duke Energy Kentucky

C. **KRS 278.2205(2)(c)**: A list of services and products provided by the utility, an identification of each as regulated or non-regulated, and the cost allocation method generally applicable to each category

C-1. Regulated and Non-regulated Services and Products of Duke Energy Kentucky

D. **KRS 278.2205(2)(d):** A list of incidental, non-regulated activities that are subject to the provisions of KRS 278.2203(4)

D-1. Incidental Non-regulated Activities of Duke Energy Kentucky

E. **KRS 278.2205(2)(e):** A description of the nature of transactions between the utility and the affiliate

E-1. Operating Company/ Nonutility Companies Service Agreement

E-2. Operating Companies Service Agreement

E-3. Service Company Utility Service Agreement

E-4. Utility Money Pool Agreement

E-5. Purchase and Sales Agreement

E-6 Tax Sharing Agreement

E-7. Affiliate Asset Transfer Agreement

E-8. Facilities Operation Agreement between The Cincinnati Gas & Electric Company and The Union Light, Heat and Power Company

E-9. Miami Fort 6 Operation Agreement

E-10 Gas and Propane Services Agreement

E-11 Agreement for Gypsum and FGD Waste Material Services

E-12 Duke Energy Kentucky Affiliate Transactions

E-13 2008 Inventory Transactions

F. **KRS 278.2205(2)(f):** For each USoA account and subaccount, a report that identifies whether the account contains costs attributable to regulated operations and non-regulated operations. The report shall also identify whether the costs are joint costs that cannot be directly identified. A description of the methodology used to apportion each of these costs shall be included and the allocation methodology shall be consistent with the provisions of KRS 278.2203

F-1. Duke Energy Kentucky Accounts

Introduction

Duke Energy Kentucky, Inc. ("Duke Energy Kentucky") is a corporation organized and existing under the laws of the Commonwealth of Kentucky. Duke Energy Kentucky's principal place of business is 1697A Monmouth Street, Newport Shopping Center, Newport, Kentucky 41071. Duke Energy Kentucky is a wholly-owned subsidiary of Duke Energy Ohio, Inc. ("Duke Energy Ohio"). Duke Energy Ohio provides electric and gas service in southwestern Ohio and also owns and operates non-regulated generating assets. Duke Energy Ohio and Duke Energy Kentucky are headquartered in Cincinnati, Ohio. Duke Energy Corporation ("Duke Energy") is a diversified energy company with a portfolio of electric and natural gas businesses, both regulated and non-regulated, and an affiliated real estate company and is headquartered in Charlotte, North Carolina.

Duke Energy Kentucky's customer service office in Kentucky is 1697A Monmouth Street, Newport Shopping Center, Newport, Kentucky 41071, and its mailing address is P.O. Box 960, Cincinnati, Ohio 45201. Duke Energy Kentucky purchases, sells, stores and transports natural gas in Boone, Campbell, Gallatin, Grant, Kenton and Pendleton Counties, Kentucky. Duke Energy Kentucky also generates electricity, which it distributes and sells in Boone, Campbell, Grant, Kenton and Pendleton Counties, Kentucky. Duke Energy Kentucky is a "utility" as defined in KRS 278.010(3)[1] and is subject to the jurisdiction of the Kentucky Public Service Commission ("Commission") pursuant to KRS 278.040.[2]

Duke Energy Kentucky has developed this Cost Allocation Manual ("CAM") as required by KRS 278.2205 CAM and will make it available for public inspection at its office as required by law..[3] This statute provides that any Kentucky utility engaged in non-regulated activities which

---

1 KY. REV. STAT. ANN. § 278.010(3) (Banks-Baldwin 2007).
2 KY. REV. STAT. ANN. § 278.040 (Banks-Baldwin 2007).
3 KY. REV. STAT. ANN. § 278.2205 (Banks-Baldwin 2007).

produce aggregate revenue exceeding "the lesser of two percent (2%) of the utility's total revenue or one million dollars ($1,000,000) annually, shall develop and file a CAM with the Commission.[4]

(REMINDER OF PAGE INTENTIONALLY LEFT BLANK)

[4] KY. REV. STAT. ANN. § 278.2203 (Banks-Baldwin 2007).

I. CAM Requirements

Duke Energy Kentucky's CAM is organized to follow the regulations set forth in KRS 278.2205(2)(a) through (f).[5] The individually labeled tabs identify the various documents that explain the operational and cost allocation procedures of Duke Energy Kentucky, as required under each of the five sub-paragraphs of KRS 278.2205(2).[6]

In general, there are three primary categories of cost allocations that affect Duke Energy Kentucky and its affiliates: (1) cost allocations from Duke Energy Business Services LLC ("Duke Energy Business Services"), the subsidiary service company of Duke Energy[7]; (2) cost allocations between Duke Energy Kentucky and Duke Energy Ohio for common costs shared by Duke Energy Ohio and Duke Energy Kentucky; and (3) administrative and general ("A&G") cost allocations between its gas and electric operations for both capital and expense accounts. The Company's allocation methodologies under those categories are described through the responses to the sub-paragraphs of KRS 278.2205(2).[8]

Duke Energy Kentucky also provides various services and goods to and receives various services and goods from its regulated and non-regulated affiliates as set forth in various agreements discussed later in this CAM.

(REMINDER OF PAGE INTENTIONALLY LEFT BLANK)

---

5 KY. REV. STAT. ANN. § 278.2205 (Banks-Baldwin 2007).

6 *Id.*

7 Effective July 1, 2008 Duke Energy Shared Services, Inc and Duke Energy Business Services, LLC were merged into a single service company, Duke Energy Business Services, LLC.

8 *Id.*

KRS 278.2205(2)(a)

A. A list of regulated and non-regulated divisions within the utility.

The above requirement is not applicable to Duke Energy Kentucky. Duke Energy Kentucky does not contain non-regulated divisions. The divisions of Duke Energy Kentucky consist solely of its regulated electric and gas utility operations, which are subject to the Commission's jurisdiction. Duke Energy Kentucky provides services to and receives various services from regulated and non-regulated affiliates, as discussed later in this CAM.

(REMINDER OF PAGE INTENTIONALLY LEFT BLANK)

KRS 278.2205(2)(b)

B. A list of all regulated and non-regulated affiliates of the utility to which the utility provides services or products and where the affiliates provide non-regulated activities as defined in KRS 278.010(21).[9]

Duke Energy Kentucky is authorized to provide services to and/ or receive services from non-regulated affiliates pursuant to the Operating Company/ Nonutility Companies Service Agreement. *Attachment E-1.*[10] This agreement was originally approved by the Commission in Case No. 2005-00228, involving the business combination between Duke Energy and Cinergy Corp. This agreement sets forth the terms and conditions of the provision of services between Duke Energy Kentucky and its non-utility affiliates. The non-regulated affiliates to which Duke Energy Kentucky could provide services, or receive services, are listed in this agreement.

Duke Energy Kentucky and its utility affiliates, Duke Energy Carolinas LLC ("DE-Carolinas"), Duke Energy Ohio, Duke Energy Indiana, Inc. ("DE-Indiana") and Miami Power Corporation provide and receive services to and from each other in the normal course of conducting business. While these operating company affiliates are considered to be outside the regulatory authority of the Commission, they are in fact regulated, to at least some degree, within their respective states of operation. The services rendered between and among these utility affiliates are generally provided pursuant to the Operating Companies Service Agreement. *Attachment E-2.*[11] The Operating Companies Service Agreement was originally approved by the Commission in Case No. 2005-00228. The agreement sets forth the terms and conditions of the provision of services.

---

[9] "Non-regulated activity" means the provision of competitive retail gas or electric services or other products or services over which the Commission exerts no regulatory authority. KY. REV. STAT. ANN. § 278.010(21) (Banks-Baldwin 2007).

[10] On September 1, 2008 the Operating Company/ Non-Utility Company Service Agreement was updated to reflect names changes to the list of signatory Nonutility Companies that occurred after A January 2, 2007, the execution of the prior agreement. The terms of the updated agreement are substantially similar to the terms of initial agreement.

[11] The Operating Companies Service Agreement was updated on September 1, 2008, to reflect the Operating Companies share a common accounting system and that the entry of appropriate transactions reflecting the costs for services rendered satisfies the billing requirement in Section 3.1.....

Duke Energy Business Services, a wholly-owned subsidiary service company of Duke Energy, provides services that are corporate or general utility in nature and are used by various, or all business units, including Duke Energy Kentucky. These services are performed pursuant to the Service Company Utility Service Agreement. *Attachment E-3.*[12] The original Service Company Utilities Service Agreement received Commission approval in Case No. 2005-00228. At that time there were two service companies providing services within the Duke Energy Corporate Holding Company Structure, Duke Energy Shared Services, Inc, (formerly Cinergy Services, Inc,) and Duke Energy Business Services. As part of the continued merger efficiencies and best practices, Duke Energy Shared Services was merged into Duke Energy Business Services in July 2008. Appendix A to this agreement sets forth the cost allocation methodologies which are used to assign charges to client companies.

Duke Energy Kentucky also receives certain products and services from Duke Energy Ohio related to the transfer of generating plants from Duke Energy Ohio to Duke Energy Kentucky. The relevant agreements are: (1) Facilities Operation Agreement between The Cincinnati Gas & Electric Company and The Union Light, Heat and Power Company dated September 27, 2004; (2) Miami Fort 6 Operation Agreement between The Cincinnati Gas & Electric Company and The Union Light, Heat and Power Company dated January 25, 2006; and (3) Gas and Propane Services Agreement with Respect to Woodsdale Generating Station By and Between The Cincinnati Gas & Electric Company and The Union Light, Heat and Power Company dated January 25, 2006. The Commission approved the transfer of these generating plants in Case No. 2003-00252 and Duke

[12] The Service Company Utility Service Agreement was updated on September 1, 2008, to reflect the Service Company will act as agent on behalf of the client companies in paying certain costs incurred on behalf of the client companies, and that such costs get passed through to the client companies and that the Service Company shares a common accounting system with the client companies, and that the entry of appropriate transactions reflecting the costs for services rendered satisfies the billing requirement in this section The terms of the Agreement are substantially similar to the prior agreement entered into as of April 3, 2006 and the amendment on January 2, 2007.

Energy Kentucky filed executed copies of these contracts with the Commission in that proceeding.[13] Copies of these Agreements are included as Attachments E-8, E-9, and E-10 respectively.

On April 24, 2007, Duke Energy Kentucky and its parent, Duke Energy Ohio, entered into an Agreement for Gypsum and FGD Waste Material Disposal Services ("Disposal Agreement") to be performed at Duke Energy Kentucky's Eastbend landfill facility. Pursuant to the Disposal Agreement, Duke Energy Ohio pays Duke Energy Kentucky $21.95/ ton for the disposal services, representing the current market price for such services. Under the Disposal Agreement, the price is adjustable on an annual basis based upon price comparison to the nearest landfills. A copy of this Disposal Agreement is included as Attachment E-11.

On July 18, 2008, the Commission approved an Affiliate Asset Transfer Agreement between the Duke Energy Kentucky, Duke Energy Ohio, Duke Energy Indiana, Inc ("Duke Energy Indiana") and Duke Energy Carolinas, Inc ("Duke Energy Carolinas"). The Asset Transfer Agreement permits the transfer of assets, excluding commodities, at cost subject to certain limitations.[14] A copy of the Asset Transfer Agreement in included as Attachment E-7.

Duke Energy Kentucky has also entered into agreements with non-regulated affiliates relating to the installation and use of telecommunications equipment and services.

Attachment B-1 is a complete list of the Duke Energy Kentucky affiliates within the Duke Energy holding company structure, including operating companies, which engage in non-regulated activity pursuant to KRS 278.010(21). The list identifies the affiliates by name and lists the nature of the affiliate's business.

(REMINDER OF PAGE INTENTIONALLY LEFT BLANK)

---

[13] Effective January 1, 2008, former employees of Duke Energy Ohio, Inc., located at Duke Energy Kentucky's East Bend and Woodsdale generating stations were transferred to Duke Energy Kentucky. Previously, services provided to Duke Energy Kentucky by these employees were performed pursuant to the terms and conditions of the various service agreements. As of January 1, 2008, these employees are now Duke Energy Kentucky employees.

[14] Commission approval was not required in South Carolina or Ohio. The Agreement was filed in Indiana. The agreement received approval by the North Carolina Utilities Commission on December 22, 2008.

AFFILIATE COMPANIES OF DUKE ENERGY KENTUCKY

Company Name	Nature of Business
ADAGE LLC	Identify, evaluate, develop, and pursue Biomass opportunities in the US.
Advance SC LLC	Distribute a portion of bulk power marketing revenues of Duke Power Company for certain South Carolina public assistance programs, education programs, economic development funding and manufacturing competitiveness funding. FERC Form 1: Grant making
Advantage IQ, Inc.	Advantage IQ is a leading provider of comprehensive cost management services for utility, telecom and waste expenses, including strategic energy management services. Its patented technology and services provide multi-site companies with critical, yet easy-to-access information that enables companies to proactively manage and reduce expenses. Advantage IQ's patented Facility IQTM System provides online access to consolidated costs as well as powerful analytical consulting services and real-time reporting tools.
Aguaytia Energy del Peru S.R. L. Ltda	Peruvian limited liability company which provides thermal electric generation in the Peruvian Amazon Basin, and is dedicated to operations in connection to natural gas and derivates.
Aguaytia Energy, LLC	Delaware limited liability holding company which owns 97.2238% of Aguaytia Energy del Peru SRL Ltda.
APOG, LLC	To provide technical, engineering and procurement support services to and for the benefit of Member-owned or operated nuclear facilities.
Atmospheric Fluidized Bed Development Corporation	Inactive entity.
Attiki Denmark ApS	Danish entity which holds 49% interest in Attiki Gas Supply Company SA. This entity is a partnership with Shell Gas BV.
Attiki Gas Supply Company S.A.	Greek entity which sells and supplies natural gas to consumers located within the geographical area of Attiki, which includes Athens, Greece.
Bison Insurance Company Limited	Insurance
Brownsville Power I, L.L.C.	A natural gas-fired generation facility located in Haywood County, Tennessee.
BSPE General, LLC	Formed to act as the Sole General Partner of BSPE, L.P.
BSPE Holdings, LLC	Formed as an indirect holding company for a Qualifying Facility (QF) as defined under the PURPA of 1978.
BSPE Limited, LLC	Formed to act as the Sole Limited Partner of BSPE, L.P.
BSPE, L.P.	Formed to purchase, own and lease certain existing equipment and fixtures in connection with the two QFs located in Texas constructed and operated by South Houston Green Power, L.P. Formed as a bankruptcy remote vehicle to purchase, own and lease certain existing equipment and fixtures in connection with the 2 facilities in Texas City and Chocolate Bayou that are owned and operated by South Houston Green Power L.P.
Caldwell Power Company	Inactive.
Carolina Centers, LLC [a Delaware LLC]	To buy, acquire, lease, mortgage, sell, donate, or otherwise deal in real and personal property.

Carolinas Virginia Nuclear Power Associates, Inc.	Non-profit
Catalytic Solutions, Inc.	Formed to develop alternative emissions control technology.
Catamount Celtic Energy Limited	Developing windpower generation in the United Kingdom
Catamount Cymru Cyf.	Developing windpower generation in the United Kingdom
Catamount Energy Corporation	Owns non regulated power generation companies in the USA and United Kingdom
Catamount Energy Limited	Developing windpower generation in the United Kingdom
Catamount Energy SC 1	Limited company that owns a Scottish limited company for wind power development
Catamount Energy SC 2	Limited company that owns a Scottish limited company for wind power development
Catamount Energy SC 3	Limited company that owns Scottish limited companies for wind power development
Catamount Heartlands Corporation	Holding company with no assets
Catamount Rumford Corporation	Limited Partner in a cogeneration plant in Maine
Catamount Sweetwater 1 LLC	Member of a Limited Liability Company that owns wind power assets in Texas
Catamount Sweetwater 2 LLC	Member of a Limited Liability Company that owns wind power assets in Texas
Catamount Sweetwater 3 LLC	Member of a Limited Liability Company that owns wind power assets in Texas
Catamount Sweetwater 4-5 LLC	Member of a Limited Liability Company that owns wind power assets in Texas
Catamount Sweetwater 6 LLC	Member of a Limited Liability Company that is developing a wind facility in Texas
Catamount Sweetwater Corporation	Member of three Limited Liability Companies.
Catamount Sweetwater Holdings LLC	Holding company that owns LLCs with interests in wind power assets in Texas.
Catawba Manufacturing and Electric Power Company	Currenty Inactive
CEC UK1 Holding Corporation	General partner in Scottish limited partnerships
CEC UK2 Holding Corporation	Limited partner in Scottish limited partnerships
CEC Wind Development LLC	Owns assets in windpower projects being developed in various states
Centra Gas Toluca S. de S.R.L. de C.V.	Mexican entity which previously provided payroll services to all DEI Mexican employees. Since the transfer of the Campeche platform to Pemex in August 2007, this company is now dormant.
CGP Global Greece Holdings, SA	Greek company which holds 51% interest in the Attiki Gas Project, and debt for the project.
CinCap IV, LLC	Markets electricity at wholesale.
CinCap V, LLC	Markets electricity at wholesale.
Cinergy Capital & Trading, Inc.	Cinergy Capital & Trading, Inc. is engaged in the business of marketing energy commodities at wholesale.
Cinergy Climate Change Investments, LLC	Formed to facilitate investments by Cinergy or its subsidiaries, and other energy companies in forestation projects in the Lower Mississippi River Valley, and possibly other sites, as a means for removing carbon dioxide (Co2) from the atmosphere.
Cinergy Corp.	The parent holding company of PSI Energy, Inc., CG&E, Cinergy Investments, Inc., and Cinergy Services, Inc..

Cinergy Foundation, Inc.	Established in January 1995. The purpose of this Foundation shall be to operate exclusively for charitable purposes, including for such purposes, the making of distributions to organizations that qualify as exempt organizations under section 501(c)(3) of the Internal Revenue Code or corresponding section of any future federal tax code.
Cinergy General Holdings, LLC	Serves as the general partner of Cinergy Marketing & Trading, L.P.
Cinergy Global (Cayman) Holdings, Inc.	Cayman holding entity which owns 100% of Cayman entity Cinergy Global Tsavo Power. This entity was formed to be utilized in connection with future EWG or FUCO acquisitions by Cinergy Corp.
Cinergy Global Ely, Inc.	Delaware entity formerly held interest in EPR Ely Power Limited an EWG/FUCO Project. EPR Ely Power Limited was sold 03/14/2005.
Cinergy Global Hellas S.A.	Greek company which holds the Asset Services Agreement for the Attiki Gas Project in Greece.
Cinergy Global Holdings, Inc.	Delaware holding company which holds 100% of Cinergy Holdings B.V. and 1 share in CGP Global Holdings, SA.
Cinergy Global Power (UK) Limited	UK entity slated for future dissolution. It is a private UK entity limited by shares which formerly held interest in a UK entity which owned and operated a gas turbine generator supplying wholesale electricity to Worcestershire, UK.
Cinergy Global Power Africa (Proprietary) Limited	South African entity is currently in process for dissolution.
Cinergy Global Power Iberia, S.A.	Spanish entity is currently in process for dissolution. Was formed to trade electricity in Spain.
Cinergy Global Power Services Limited	The Company may carry on any lawful business, purpose or activity.
Cinergy Global Power, Inc.	To engage in any lawful act or activity for which a corporation may be organized under the General Corporation Law of the State of Delaware as set forth in Title 8 of the Delaware Code (the "GCL").
Cinergy Global Resources, Inc.	The U.S. holding company created for Cinergy's international, non-regulated investments, as well as its domestic initiatives in renewable generation. Through its subsidiaries, Cinergy Global Resources, Inc. holds interests in power generation, transmission and distribution projects worldwide and is also active in European gas and electricity markets. Assets in operation/development are located in various countries, including the Czech Republic, Denmark, Greece, Kenya, Spain, South Africa, England and Wales, Cayman Islands, the Netherlands, Poland, the U.S. and the Republic of Zambia. O'Neill, Teri 6/14/2004 1:37:27 PM
Cinergy Global Trading Limited	UK entity limited in shares slated for dissolution. Its subsidiaries were formerly involved in gas, electricity and trading business and related energy products in UK.
Cinergy Global Tsavo Power	Cayman Island entity holds 48% interest in IPS-Cinergy Power Limited, a Kenyan entity, through its joint venture with Industrial Promotion Services (Kenya) Limited which holds the other 51.8% in IPS-Cinergy Power Limited.
Cinergy Holdings BV	Dutch holding company currently inactive.
Cinergy Investments, Inc.	A non-utility subsidiary holding company that holds the majority of Cinergy's domestic non-utility businesses.
Cinergy Limited Holdings, LLC	Holds an interest in Cinergy marketing & Trading, L.P.
Cinergy Origination & Trade, LLC	The Company may carry on any lawful business, purpose or activity.
Cinergy Power Generation Services, LLC	The Company may carry on any lawful business, purpose or activity.

Cinergy Power Investments, Inc.	Formed to hold the assets of divested or other non-regulated power plants. O'Neill, Teri 3/10/2004 3:34:10 PM
Cinergy Receivables Company LLC	Intended to and shall operate and function as a Qualified Special Purpose Entity ("QSPE") as that term is defined in the Statement of Financial Ccounting Standards No. 140 ("FASB 140"). For detailed purpose, please refer to Section 7 of the A&R LLC Agreement dated 3.31.2002. Cinergy Receivables Company LLC was formed for the purpose of purchasing the accounts receivables and related rights of PSI Energy, Inc., ULH&P and CG&E and then securitizing such receivables through a loan agreement with certain commercial banks.
Cinergy Retail Power General, Inc.	Formed to serve as the general partner of Cinergy Retail Power, L.P.
Cinergy Retail Power Limited, Inc.	Formed to hold an investment in Cinergy Retail Power, L.P.
Cinergy Retail Power, L.P.	Formed to engage in the retail sale of electric power to large industrial customers in states that have legislatively or administratively established customer choice and retail competition.
Cinergy Solutions - Utility, Inc.	To provide engineering, construction, operation and maintenance services with respect to electric and natural gas systems and infrastructure.
Cinergy Solutions Partners, LLC	The Company may carry on any lawful business, purpose or activity.
Cinergy Technology, Inc.	Manages Cinergy's existing non-regulated, technology-related investments, assess the market potential for non-regulated product and service development opportunities, and form key alliances for non-regulated product development.
Cinergy Two, Inc.	To engage in any lawful act or activity for which corporations may be organized under the General Corporation Law of the State of Delaware.
Cinergy UK, Inc.	To engage in any lawful act or activity for which corporations may be organized under the General Corporation Law of the State of Delaware as set forth in Title 8 of the Delaware Code (the GCL").
Cinergy Wholesale Energy, Inc.	Cinergy Wholesale Energy, Inc. is a holding company for non-utility energy services businesses.
Cinergy-Centrus Communications, Inc.	Inactive and being held open for tax purposes.
Cinergy-Centrus, Inc.	Inactive and is being held open for tax purposes.
CinFuel Resources, Inc.	Holding company that owns, through direct or indirect investment, and/or operates, projects capable of producing synthetic fuel, such as LH1, LLC.
CinPower I, LLC	A company that optimizes the economic benefits in connection with the restructured wholesale power purchase agreement involving certain non-affiliates.
Claiborne Energy Services, Inc.	Is the general partner of Clean Energy Partners Limited Partnership, a limited partnership which was formed to develop, own and operate a coal gasification electric power facility. Own and operate a uranium enrichment facility.

Comercializadora Duke Energy de Centro America, Limitada	Guatemalan company used as a trading and marketing vehicle. It was originally formed to buy excess electricity from El Salvador and sell it in the open market. It also buys power from DEI Guatemala y Cia SCA (Planta Arizona and Planta Las Palmas) under a PPA with that entity.
Commercial Electricity Supplies Limited	The Company may carry on any lawful business, purpose or activity.
Compania de Servicios de Compresion de Campeche, S.A. de C.V.	Mexican JV corporation which previously rendered gas compression services to PEMEX. This company was placed into liquidation on December 13, 2007.
Conterra Ultra Broadband Holdings, Inc.	Conterra is a facilities-based, FCC common carrier that provides high quality, high capacity backhaul and wide area network services for mobile carriers, school districts and government entities throughout the country.
Crescent Holdings, LLC	Real Estate Development
Crescent Resources, LLC	Real Estate Development
CSCC Holdings Limited Partnership	Canadian entity holding 50% ownership interests in Compania de Servicios de Compresion de Campeche S.A. de C.V. Since the transfer of the Campeche platform to Pemex in August 2007, this company is now dormant and on hold for liquidation.
CSGP General, LLC	Company created to act as the sole general partner of CSGP Services, L.P.
CSGP Limited, LLC	Company created to act as the sole limited partner of CSGP Services, L.P.
CST General, LLC	To transact of any and all lawful business for which limited liability companies may be organized under the Texas Limited Liability Company Act.
CST Green Power, L.P.	Purpose is to be the project company that will partially own and manage a long-term co-generation project located in Texas.
CST Limited, LLC	The Company may carry on any lawful business, purpose or activity.
CTE Petrochemicals Company	Cayman partnership 50% owned by Texas Eastern Arabian Ltd. (Duke entity) and 50% owned by sub of Duke's partner, Celanese Corporation. CTE is the holding company for 50% interest in National Methanol Company, a methanol project in Saudi Arabia and JV with SABIC.
Current Group, LLC	CURRENT provides electric utilities a Smart Grid solution that increases the efficiency and reliability of the electric grid while reducing the environmental impact of electric usage.
D/FD Holdings, LLC	Holding company for previous D/FD companies
D/FD International Services Brasil Ltda.	Formed to be the contracting entity for the DI Project (and possibly other projects) in Brazil.
D/FD Operating Services LLC	Operation of electric generating plant
DE Marketing Canada Ltd.	Holding company/General partner.
DE Nuclear Engineering, Inc.	Nuclear Engineering Services
DEB - Pequenas Centrais Hidrelétricas Ltda.	Power generation and sale in Brazil.
DEGS Biogas, Inc.	The Company may carry on any lawful business, purpose or activity.
DEGS Biomass, LLC	Acquiring, holding and funding 50% ownership interest in Adage, LLC.

DEGS EPCOM College Park, LLC	Performs various utility-related engineering, procurement, construction, operation and maintenance services at the University of Maryland.
DEGS GASCO, LLC	The Company may carry on any lawful business, purpose or activity.
DEGS O&M, LLC	To operate and maintain several facilities owned by subsidiaries of KGen, LLC.
DEGS of Boca Raton, LLC	Develops, constructs, finances, operates and maintains certain thermal energy facilities located in Boca Raton, Florida and sells associated thermal, and other, energy-related products and services.
DEGS of Cincinnati, LLC	Owns and operates a district cooling business in downtown Cincinnati, Ohio.
DEGS of Delta Township, LLC	To perform the construction and operating services for GM for the Delta Township assembly facilities.
DEGS of Lansing, LLC	Cinergy Solutions Operating Services of Lansing, LLC performs oversight, management, operation and maintenance of energy/utility service facilities at a General Motors vehicle assembly plant in Lansing, Michigan.
DEGS of Monaca, LLC	To operate, maintain and manage Horsehead Industries, Inc. dba Zinc Corporation of America's G. F. Weaton Station located in Monaca, PA.
DEGS of Narrows, LLC	Formed for the purpose of operating, maintaining and managing the existing utility system at the Celanese acetate manufacturing facility located in Narrows, Virginia.
DEGS of Oklahoma, LLC	The purpose of the Company is to engage in any activity for which limited liability companies may be organized in the State of Delaware.
DEGS of Parlin, LLC	Operation and maintenance for customer facility.
DEGS of Philadelphia, LLC	The Company may carry on any lawful business, purpose or activity.
DEGS of Rock Hill, LLC	Formed for the purpose of operating, maintaining and managing the existing utility system at the Celanese acetate manufacturing facility located in Rock Hill, South Carolina.
DEGS of San Diego, Inc.	Purpose is to supervise the construction of, operate and maintain, an energy facility at Children's Hospital and Health Center in San Diego, California.
DEGS of Shreveport, LLC	Cinergy Solutions Operating Services of Shreveport, LLC performs oversight, management, operation and maintenance of energy/utility service facilities at a General Motors vehicle assembly plant in Shreveport, Louisiana.
DEGS of South Charleston, LLC	To design, build, own, operate, and maintain certain steam generating equipment and ancillary water treatment equipment to be located at the UCC Technical Center in South Charleston, West Virginia.
DEGS of St. Bernard, LLC	Operate, maintain and manage the existing utility system and to design, develop, construct and own system improvements at Proctor & Gamble's chemical manufacturing facility located in St. Bernard, Ohio.
DEGS of St. Paul, LLC	Own St. Paul Cogeneration LLC.
DEGS of Tuscola, Inc.	Oversees the operations and staffing of a qualifying facility (QF) located in Tuscola, Illinois.
DEGS Three Buttes, LLC	To act as a holding company for the LLC interests of Three Buttes Windpower, LLC, which will develop, construct, own and operate the Campbell Hill Windpower project near Casper, Wyoming.
DEGS Wind I, LLC	Holding Company for project companies which will develop wind assets.
DEGS Wind Supply II, LLC	To procure wind turbine generators from General Electric for projects under development by DEGS Wind I, LLC and its affiliates.
DEGS Wind Supply, LLC	The purpose of the Company is to engage in any activity for which limited liability companies may be organized

	in the State of Delaware.
Delta Township Utilities II, LLC	Formed to provide new assets to service General Motors' new assembly plant located in Delta Township, Michigan, including the design, construction, ownership, operations and maintenance of such new assets.
Delta Township Utilities, LLC	Constructs, owns, operates and maintains energy-related facilities for a General Motors metal stamping facility located in Michigan.
DENA Asset Partners, L.P	Personnel Management
DENA Partners Holding, LLC	Payroll company
DETMI Management, Inc.	Holding company.
Dixilyn-Field (Nigeria) Limited	Inactive, but still on the books
Dixilyn-Field Drilling Company	Inactive, but still on the books
Dixilyn-Field International Drilling Company, S.A.	Inactive, but still on the books
DTMSI Management Ltd.	Holding Company
Duke Broadband, LLC	The purpose of the Company is to engage in any activity for which limited liability companies may be organized in the State of Delaware.
Duke Capital Partners, LLC	To provide lending, investment banking and asset management services to the wholesale and commercial energy market.
Duke Communications Holdings, Inc.	Provides telecommunications services, information services, selling or leasing of long-haul optic fiber capacity and energy management services.
Duke Energy Allowance Management, LLC	Purchase and sale of environmental credits.
Duke Energy Americas, LLC	Holding Company
Duke Energy Business Services LLC	Management Services
Duke Energy Carolinas Plant Operations, LLC	Performs the operations and maintenance and provides other plant services for power generation and energy facilities.
Duke Energy Carolinas, LLC	Holding Company
Duke Energy Cerros Colorados, S.A.	Argentine entity which serves as the operator of both generation facilities in Argentina: Alto Valle and Planicia Banderita.
Duke Energy Corporate Services, Inc.	Holding Company
Duke Energy Corporation	Holding Company.
Duke Energy Development Pty Ltd	Australian company slated for dissolution.
Duke Energy Egenor S. en C. por A.	Peruvian joint stock company which owns 2 central hidroelectric plants: 263 MW Canon del Pato and 95 MW Carhuaquero. Also owns 6 thermoelectric plants in the north of Peru: 43 MW in Piura; 63 MW in Chimbote; 21 MW in Trujillo; 24 MW in Chiclayo; 9 MW in Paita; and 10 MW in Sullana.
Duke Energy Electroquil Partners	Delaware general partnership holding 99.75% in Duke Energy International del Ecuador Cia. Ltda. In connection with the Electroquil facility in Guayaquil, Ecuador.
Duke Energy Engineering, Inc.	Markets various utility-related engineering services.

Duke Energy Fossil-Hydro California, Inc.	Performs operation and maintenance and other plant services for power generation and energy facilities.
Duke Energy Fossil-Hydro, LLC	To provide operation and maintenance services to fossil-fired and hydro-powered electric generation facilities.
Duke Energy Generating S.A.	Argentine holding company for Duke's 90.87% interest in Duke Energy Cerros S.A., an Argentine company which serves as the operator for both facilities in Argentina: Alto Valle and Palanicia Banderita.
Duke Energy Generation Services Holding Company, Inc.	Markets an array of energy-related products and services and develops, acquires, owns and operates certain energy-related projects.
Duke Energy Generation Services, Inc.	Develops, acquires, owns and operates certain energy-related businesses, formerly conducted by Cinergy Solutions Holding Company, Inc.
Duke Energy Global Markets, Inc.	Engaged in management and investment of funds.
Duke Energy Group Holdings, LLC	Delaware limited liability company which holds the 100% ownership interest in Duke Energy Group, LLC.
Duke Energy Group, LLC	Delaware limited liability company with interests in Duke's international companies involved with electric power projects and marketing of electric power.
Duke Energy Indiana, Inc.	The production, transmission, distribution, and sale of electricity in North Central, Central, and Southern Indiana.
Duke Energy Industrial Sales, LLC	The purpose of this entity is to engage in the sale of coal and other supplies to industrial companies.
Duke Energy International (Europe) Holdings ApS	Danish holding company slated for dissolution pending dissolutions of its UK subsidiaries.
Duke Energy International (Europe) Limited	UK company in process of voluntary dissolution.
Duke Energy International Argentina Holdings	Cayman entity slated for dissolution.
Duke Energy International Argentina Marketing/Trading (Bermuda) Ltd.	Bermuda entity slated for dissolution.
Duke Energy International Asia Pacific Ltd.	Bermuda holding company slated for dissolution pending liquidation of its subsidiaries.
Duke Energy International Bolivia Holdings No. 1, LLC	Delaware limited liability company currently inactive as a result of the sale of the Bolivian assets in February 2007.
Duke Energy International Brasil Commercial, Ltda.	Brazilian entity which holds 99.99% in Duke Trading do Brasil Ltda.
Duke Energy International Brasil Holdings, LLC	Delaware entity which holds the minority interest in Duke Energy International Brasil Ltda.
Duke Energy International Brazil Holdings Ltd.	Bermuda holding company for Duke Energy International's assets in Brazil.
Duke Energy International Comercializadora de El Salvador, S.A. de C.V.	Salvadorean entity used for energy trading and marketing throughout the Central American region; import, export and domestic electric energy transactions.
Duke Energy International del Ecuador Cia. Ltda.	Ecuadorean company which owns 82.7482% in Electroquil SA, an electric power generation company located in Guayaquil, Ecuador.

Duke Energy International El Salvador Investments No. 1 Ltd	Bermuda holding entity for Duke Energy International's assets in El Salvador.
Duke Energy International El Salvador Investments No. 1 y Cia. S. enC. de C.V.	Salvadorean holding entity for Duke Energy International's assets in El Salvador.
Duke Energy International El Salvador, S en C de CV	Salvadorean operating company - a thermal electric generation plant.
Duke Energy International Electroquil Holdings, LLC	Delaware holding entity which owns 0.25% interest in Duke Energy International del Ecuador Cia, Ltda.
Duke Energy International Espana Holdings, S.L.U.	Spanish holding entity which holds ownership interests in Argentina and Ecuador.
Duke Energy International Group, Ltd.	Bermuda holding company for all of Duke Energy International's interests in Latin America.
Duke Energy International Guatemala Holdings No. 1, Ltd.	Bermuda holding company which holds ownership interest in Guatemalan entities which generate, sell, supply, transmit, trade in, purchase and market electricity, natural gas, and hydro carbon products.
Duke Energy International Guatemala Holdings No. 2, Ltd.	Bermuda holding entity slated for dissolution.
Duke Energy International Guatemala Holdings No. 3	Cayman Island holding entity slated for dissolution.
Duke Energy International Guatemala Limitada	Guatemalan limited liability entity which holds 99% interest in Duke Energy International Operaciones Guatemala Limitada and 99% of Duke Energy International Transmision Guatemala Limitada. Slated for dissolution
Duke Energy International Guatemala y Compania Sociedad en Comandita por Acciones	Guatemalan joint stock entity which owns and operates with Duke Energy International Transmision Guatemala Ltda an 235 MW electric generation facility in Guatemala which is comprised of the 150 MW Arizona plant and the 85 MW Las Palmas plant.
Duke Energy Internationai Holding, Ltd.	Holding company
Duke Energy International Investments No. 2 Ltd.	Bermuda holding company which holds a minority interest in Duke Energy Generating S.A. and Duke Energy International Southern Cone SRL.
Duke Energy International Latin America, Ltd.	Bermuda holding company for all of Duke Energy International's interests in Latin America.
Duke Energy International Mexico, S.A. de C.V.	Mexican company which previously managed the Campeche platform in Mexico. Since the transfer of the Campeche platform to Pemex in August 2007, this company is now dormant.
Duke Energy International Netherlands Financial Services B.V.	Dutch entity used for various financial transactions within DEI.
Duke Energy International Operaciones Guatemala Limitada	Guatemalan entity which owns the land that Planta Arizona is located on.
Duke Energy International Peru Inversiones No. 1, S.R.L.	Peruvian entity in process of dissolution.
Duke Energy Internationai Peru Investments No. 1, Ltd.	Bermuda holding entity for the Peruvian companies.

Duke Energy International PJP Holdings, Ltd.	Bermuda entity slated for dissolution.
Duke Energy International Southern Cone SRL	Argentine limited liability entity set up for trade & marketing.
Duke Energy International Trading and Marketing (UK) Limited	Business Activity 4010 - As of October 25, 2006, Company is in process of voluntary dissolution.
Duke Energy International Transmision Guatemala Limitada	Guatemalan entity that owns and operates a 230 Kv electric transmission line facility in Guatemala.
Duke Energy International Uruguay Holdings, LLC	Delaware holding entity which holds a minority ownership interest in Duke Energy International Uruguay Investments, SRL.
Duke Energy International Uruguay Investments, S.R.L.	Uruguayan limited liability holding entity for Duke's assets in Argentina and Ecuador.
Duke Energy International, Brasil Ltda.	Brazilian company set up for the participation at bidding procedures and/or auctions for the transfer of ownership interests in electricity companies in Brazil.
Duke Energy International, Geracao Paranapanema S.A.	Brazilian entity which owns and operates 8 hydroelectric generating facilities in the Paranapanema River in Sao Paulo, Brazil.
Duke Energy International, LLC	Delaware parent/holding company for all of the DEI subsidiaries.
Duke Energy Kentucky, Inc.	The transmission, distribution, and sale of electricity energy and the sale and transportation of natural gas in northern Kentucky. O'Neill, Teri 3/10/2004 3:50:41 PM
Duke Energy Marketing America, LLC	Energy Marketing and energy management for unregulated merchant energy facilities of Duke Energy North America, LLC.
Duke Energy Marketing Corp.	Was formed to engage in the marketing of electric power.
Duke Energy Marketing Limited Partnership	Engage in the business of purchasing, selling and marketing natural gas, electric power and other energy products and services in Canada.
Duke Energy Merchant Finance, LLC	Financing
Duke Energy Merchants Investments (UK) Limited	UK company in process of voluntary dissolution.
Duke Energy Merchants Trading and Marketing (UK) Limited	UK company in process of voluntary dissolution.
Duke Energy Merchants UK LLP	UK company in process of voluntary dissolution.
Duke Energy Merchants, LLC	Provides financial, risk management and asset management services to producers, transporters and users of global energy commodities and derivative products such as crude oil, refined products, LPGs, residual fuels, coal, and fertilizer.

Duke Energy Moapa, LLC	Transact any and all lawful business for which limited liability companies may be organized under the act.
Duke Energy Murray Operating, LLC	To own and operate merchant power plant.
Duke Energy North America, LLC	Development, ownership, and operation of energy facilities.
Duke Energy Ohio, Inc.	Engaged in the production, transmission, distribution and sale of electricity and the sale and transportation of natural gas in the southwestern portion of Ohio. O'Neill, Teri 3/10/2004 3:34:34 PM
Duke Energy One, Inc.	Duke Energy One has two different businesses - one for residential customers and one for commercial/industrial customers. On the residential side, Michael Goldenberg directs DE One's strikestop and underground protection offerings. Strikestop is a whole-house surge protector that DE One sells to residential customers. Underground protection is an offering under which DE One repairs underground customer-owned electric. On the commercial/industrial side, Bruce Modlin directs DE One's customer-owned substation construction and maintenance activities. Evidently, there are large customers with their own transformers/substations. DE One builds these and repairs/maintains these.
Duke Energy Peru Holdings S.R.L.	Peruvian limited liability holding company.
Duke Energy Providence, LLC	Holding Company
Duke Energy Receivables Finance Company, LLC	Receivables finance company
Duke Energy Registration Services, Inc.	Manages the brand protection of Duke Energy Corporation.
Duke Energy Retail Sales, LLC	To provide retail gas and electric services.
Duke Energy Royal, LLC	Holding Company
Duke Energy Services Canada ULC	Holding Company
Duke Energy Services Ireland Limited	Irish entity was dissolved on October 17, 2008.
Duke Energy Services, Inc.	a holding company.
Duke Energy Supply Chain Services, LLC	Transact any and all lawful business for which limited liability companies may be organized under the Act.
Duke Energy Trading and Marketing, L.L.C.	Market natural gas, electricity and other energy related commodities. Does not have a parent company. Member companies are DETMI Management, Inc., 60% and Mobil Natural Gas, Inc., 40%.
Duke Energy Trading Exchange, LLC	Holds an interest in the ICE trading platform used by DETM and DEMA. Company must remain active
Duke Energy Transmission Holding Company, LLC	Holding company for transmission joint venture.
Duke Engineering & Services (Europe) Inc.	Subsidiary of DE&S, is engaged in engineering and related services in Europe.

Duke Engineering & Services International, Inc.	Investment company. Partner in a joint venture in Argentina.
Duke Investments, LLC	The Company may carry on any lawful business, purpose or activity.
Duke Java, Inc.	Nevada entity is slated for dissolution.
Duke Project Services Australia Pty Ltd	Australian company slated for dissolution.
Duke Project Services, Inc.	Engaged in engineering activities for coal projects.
Duke Supply Network, LLC	The Company may carry on any lawful business, purpose or activity.
Duke Technologies, Inc.	Cinergy Technologies, Inc. is a wholly-owned subsidiary of Cinergy Corp., is a holding company for various Cinergy investments and initiatives. O'Neill, Teri 6/14/2004 1:39:27 PM
Duke Trading Do Brasil Ltda.	Brazilian entity used to purchase and sell electric power.
Duke Ventures II, LLC	The Company may carry on any lawful business, purpose or activity.
Duke Ventures, LLC	Holding company
Duke-Cadence, Inc.	To engage in the construction, operation, development or ownership of cogeneration facilities or power production facilities. To enter into joint ventures and partnership agreements.
Duke-Reliant Resources, Inc.	Holds Cinergy's investment in Reliant Services, LLC.
Duke/Fluor Daniel	Engineering activities to coal fired plants.
Duke/Fluor Daniel Caribbean, S.E.	Execution of an engineering, procurement and construction services agreement between the partnership and AES Puerto Rico, L.P.
Duke/Fluor Daniel El Salvador S.A. de C.V.	Per Skip Weiss: Entity apparently set up as a contracting entity for El Salvador, but is apparently inactive.
Duke/Fluor Daniel International	Provides engineering, construction and operation services inside the U.S. to coal fired electric plants outside the U.S.
Duke/Fluor Daniel International Services	Coal Fired Generating Plant Services
Duke/Fluor Daniel International Services (Trinidad) Ltd.	Execution of an engineering, procurement and construction services agreement between Duke/Fluor Daniel International Services (partnership) and InCOGEN Limited.
Duke/Louis Dreyfus L.L.C.	A limited liability company formed to engage in the marketing of power. It sells both natural gas and electricity throughout the US.
DukeNet Communication Services, LLC	Hold telecommunications tower assets and provide certain telecommunications services
DukeNet Communications, LLC	Telecommunication Services
DukeNet/TCG LLC	Wholesale provider of fiber-optic services
DukeTec I, LLC	The Company may carry on any lawful business, purpose or activity.
DukeTec II, LLC	To invest in energy/power generation and telecommunications technology opportunities.
DukeTec, LLC	Facilitates energy-related investments.

	O'Neill, Teri 6/14/2004 1:38:36 PM
Eastman Whipstock do Brasil Ltda.	Inactive
Eastman Whipstock, S.A.	Inactive. Oil and gas field services
Eastover Land Company	Real Estate
Eastover Mining Company	Mining company (NOT a payroll entity)
Electroquil, S.A.	Ecuadorean entity which owns and operates 4 diesel-fired turbines of 180 MW near Guayaquil, Ecuador.
Energy Equipment Leasing LLC	Leases, sells or finances energy-related equipment.
Energy Pipelines International Company	Engineering & Management Services. Currently Inactive.
Environmental Wood Supply, LLC	Handles all fuel and fuel procurement-related costs for St. Paul Cogeneration LLC.
Equinox Vermont Corporation	Non-regulated ownership of biomass and cogeneration facilities in VT and Maine
Etenorte S.R.L.	Peruvian entity engaged in activities related to electricity transmission.
Eteselva S. R. L.	Peruvian limited liability company, and subsidiary of Aguaytia Energy, LLC which owns and operates transmission lines from Aguaytia, Peru to Paramanga, Peru and transmits electricity to customers in Peru.
eVent Resources Holdings LLC	Holds an equity interest in Triple Point Technology, Inc., a Connecticut-based technology company that develops and markets a suite of risk scenarios and effectively trades and manages transactions. This company also potentially conducts other quthorized transactions consistent with ETC status.
eVent Resources I LLC	Acquires, owns, holds controls, manages, finance, builds, operates and liquidates a network of companies engaged primarily in businesses that take advantage of investment opportunities arising from the deregulation of the electric utility industry, including investments in power generation, new energy technology and telecommunications, whether through 100% ownership or a smaller percentage ownership.
eVent Resources Overseas I, LLC	The Company is organized primarily for the object and purpose of acquiring, owning, holding, controlling, managing, financing, building, operating, and liquidating an investment in Saw Mill Capital Fund, III, LLC, a Delaware limited liability company and a special purpose company that holds an interest in Clyde Bergeman, and other investments in other entities consistent with Section 2.3 of the Operating Agreement (the "Operating Agreement") of eVent dated as of December 1, 2000 (each such investment, a "Portfolio Investment").
Fiber Link, LLC	Performs the installation of conduit and then sells, rents, leases and otherwise, commercially optimizing said conduit.
Fort Drum Cogenco, Inc.	Is a general partner in Black River Limited Partnership, The owner of a cogeneration plant in New York. General partnership cogeneration plant.
Gas Integral S.R.L.	Peruvian limited liability which gathers gas in connection with the Aguaytia asset.
Generadora del Pacifico, Limitada	Guatemalan limited liability entity slated for dissolution

Generadora La Laguna Duke Energy International Guatemala y Cia., S.C.A.	Guatemalan joint stock company which owns 60 MW electric generation facility in Guatemala.
Green Power G.P., LLC	Formed to act as the sole general partner of South Houston Green Power, L.P.
Green Power Holdings, LLC	The sole puropses of the Company are to engage in all aspects of the development, construction, ownership, operation and maintenance of the Project, adn to engage in any lawful act or activity for which limited liability companies may be formed under the Act in respect thereof, and to engage in any and all activities necessary, adviseable or incidental thereto.
Green Power Limited, LLC	Formed to act as the sole limited partner of South Houston Green Power, L.P.
Greenville Gas and Electric Light and Power Company	Currenty Inactive.
Happy Jack Windpower, LLC	Owner of all the assets that comprise the 29.4 MW Happy Jack Wind power Project being developed in Cheyenne, Wyoming.
IGC Aguaytia Partners, LLC	Cayman company with ownership interests in the Aguaytia project in Peru.
Inver Energy Holdings I	Cayman Holding company.
Inver Energy Holdings II	Cayman Holding company.
Inver-Energy, S.A.	Guatemalan operating company
IPS-Cinergy Power Limited	Holds a joint venture in Tsavo Power Company in Kenya.
KEFI-Exchange Inc.	Established for the purposes of designing, developing, implementing and operating an emissions reduction commodity registry and electronic trading exchange.
KO Transmission Company	Engaged in the transportation of natural gas in interstate commerce between Kentucky and Ohio. O'Neill, Teri 3/10/2004 3:58:20 PM
Lansing Grand River Utilities, LLC	Provides energy-related services to SUEZ/VWNA/DEGS of Lansing, LLC
Laurel Hill Wind Energy, LLC	Limited Liability Company that is developing a wind facility in Pennsylvania
LH1, LLC	Formed for the purpose of being the project company that will own a facility capable of producing synthetic fuel, qualifying for tax credits under IRS 29(c). The Company will produce synthetic fuel from coal by applying a latex or asphalt binder in order to induce a chemical change, with such change being a requirement for tax credit eligibility. The facility is located at a Mirant generating station in Newburg, Maryland.
Louisiana Energy Services, L.P.	A limited partnership formed to design, license, construct, own and operate a centrifuge uranium enrichment plant to be located in the U.S., and sell and provide enrichment services and products on a profitable basis therefrom.
Mark Hill Windpower Limited	Sold
MCP, LLC	Need to retain MCP, LLC. It is still the legal owner of property associated with the Mill Creek Combustion Turbine Station, and that facility is the subject of a "Fee in Lieu of Taxes" agreement with Cherokee County, SC that will be in place at least for another 18 years or so.

Miami Power Corporation	Owns an electric transmission line in Indiana. O'Neill, Teri 3/10/2004 3:56:30 PM
Midlands Hydrocarbons (Bangladesh) Limited	Slated for dissolution. Formed to hold Cinergy's interest in the Semutang Gas Field, along with development rights for a power project.
National Methanol Company (IBN SINA)	A joint venture with SABIC for the operation of a methanol production plant in Saudi Arabia. 50% held by SABIC and 50% held by CTE Petrochemicals Company (Duke's partnership with Celanese).
NorthSouth Insurance Company Limited	Captive Insurance Services
Notrees Windpower, LP	Owner of all the assets that comprise that Notrees Wind power Project being developed in Ector and Winkler Counties, Texas.
NuStart Energy Development, LLC	Submit proposal to DOE to demonstrate the Combined Operating License process for a new plant. Being formed with five other utilities.
Oak Mountain Products, LLC	Project company that owns a facility capable of producing synthetic fuel. from coal by applying a latex or asphalt binder in order to induce a chemical change.
Ocotillo Windpower, LP	Owner of all the assets that comprise the 58.8 MW Ocotillo Wind power Project being developed near Big Spring, Texas.
Ohio River Valley Propane, LLC	Engaged in the business of marketing propane in the United States and owning and operating a propane storage cavern.
Ohio Valley Electric Corporation	Formed for the purpose of providing the large electric power requirement projected for a major DOE uranium enrichment complex. OVEC has in turn a subsidiary called Indiana Kentucky Electric Corporation which provides similar services. Owns an electric generating facility and sells electricity to a government facility that makes weapons. It also provides the large electric power requirement for a major Department of Energy uranium enrichment complex.
Oklahoma Arcadian Utilities, LLC	Constructs, owns, operates and maintains energy-related facilities located at a General Motor vehicle assembly plant in Oklahoma City, Oklahoma.
Owings Mills Energy Equipment Leasing LLC	The purpose of the Company is to participate in the Sweetheart Cup Project in accordance with the terms of the Equipment Lease and associated schedules with Customer and related agreements.
P.I.D.C. Aguaytia, L.L.C.	Delaware limited liability company with ownership interest in the Aguaytia project in Peru.
Pacific Power Holdings No. 1, B.V.	Danish Holding company for potential projects in Central America
Pacific Power Holdings No. 2, B.V.	Danish Holding company for potential projects in Central America
Pan Service Company	Corporate staff operations; General Partner (1%) in PanEnergy Services Limited Partnership.
PanEnergy Corp	Parent Company
Peru Energy Holdings, LLC	Delaware holding company which holds 99% in Gas Integral SRL (Peru) with regard to the Aguaytia project in Peru.
Piedmont Venture Partners Limited Partnership	Currently undergoing Bankruptcy Proceedings
Pioneer Transmission, LLC	acting as a regulated electric utility that is a transmission service provider within the State of Indiana; designing, acquiring, constructing, owning and operating electric transmission facilities within the State of

	Indiana.
Q-Comm Corporation	Full-service telecommunications provider, which is currently putting in place fiber optic cable, switching equipment, back office support and sales/marketing plan.
Reliant Services, LLC	Performs underground utility-related facilities locating, meter reading and construction services.
Rumford Cogeneration Company Limited Partnership	Owns a cogeneration facility in Maine.
Ryegate Associates	Owns a bio-mass facility in Vermont
Sandy River Timber, LLC	Assemblage of land for future generation project use
Seahorse do Brasil Servicos Maritimos Ltda.	Inactive. Has been dormant for many years. Dissolution under review.
Searchlight Wind Energy LLC	Developing wind power project in Nevada
Shreveport Red River Utilities, LLC	The Company may carry on any lawful business, purpose or activity.
Silver Sage Windpower, LLC	Holds a lease for some property in Laramie County, Wyoming.
South Construction Company, Inc.	Holds legal title to real estate and interests in real estate which are either not used and useful in the conduct of PSI's business or which has some defect in title which is unacceptable to PSI.
South Houston Green Power, L.P.	Formed for the purpose of selling steam and electricity to BP at its Texas City and Chocolate Bayou facilities. In addition, it will also operate and maintain existing facilities and construct, own and operate new cogeneration facilities at the loctns.
Southeastern Energy Services, Inc.	Services
Southern Power Company	Inactive, but still on the books - retain entity
Spruce Mountain Investments, LLC	Holding company - Owns all the membership interests in Spruce Mountain Products, LLC, a coal-based synthetic fuel productivity facility.
Spruce Mountain Products, LLC	A coal-based synthetic fuel production facility.
St. Paul Cogeneration, LLC	Develops, constructs, operates and maintains a qualifying facility (QF) in downtown St. Paul, Minnesota.
SUEZ-DEGS of Ashtabula, LLC	Develops, constructs, operates and maintains a qualifying facility (QF) located in Ashtabula, Ohio and provides other energy-related products and services.
SUEZ-DEGS of Lansing, LLC	Provides management services for Trigen/Cinergy-USFOS of Lansing LLC.
SUEZ-DEGS of Orlando, LLC	Develops, constructs, operates and maintains a district cooling business in Orlando, Florida.
SUEZ-DEGS of Owings Mills, LLC	Develops, constructs, operates and maintains a cogeneration facility located at the Sweetheart Cup Corporation in Owings Mills, Maryland.
SUEZ-DEGS of Rochester, LLC	Provides energy-related services to Kodak Park in Rochester, New York.
SUEZ-DEGS of Silver Grove, LLC	Provides energy-related services to the Lafarge gypsum manufacturing plant in Silver Grove, Kentucky. These services include the design, installation and operation of a combined heat and power system.
SUEZ-DEGS of Tuscola, LLC	Develops, constructs, operates and maintains a qualifying facility (QF) in Tuscola, Illinois and provides other energy-related products and services.

SUEZ-DEGS, LLC	Engages in the preliminary development of cogeneration and/or thermal energy facilities. Specific projects are developed and held by special purpose affiliates.
SUEZ/VWNA/DEGS of Lansing, LLC	Develops, constructs and operates certain energy facilities located at a General Motors facility in Lansing, Michigan.
Sugartree Timber, LLC	Hold land for future generation project use.
Sweetwater 4-5 Holdings LLC	Holding company that owns LLCs with interests in wind power assets in Texas.
Sweetwater Development LLC	Developing wind power project in Texas
Sweetwater Wind 1 LLC	Owns wind generation facility in Texas
Sweetwater Wind 2 LLC	Owns wind generation facility in Texas
Sweetwater Wind 3 LLC	Owns wind generation facility in Texas
Sweetwater Wind 4 LLC	Owns wind generation facility in Texas
Sweetwater Wind 5 LLC	Owns wind generation facility in Texas
Sweetwater Wind 6 LLC	Owns assets of wind power project being developed in Texas
Sweetwater Wind Power L.L.C.	Owns wind generation assets in Texas
SYNCAP II, LLC	Formed to commercialize new technologies for converting high-sulfur coal to low-sulfur coal.
TBP Properties, LLC	Hold land for future project use
TE Happy Jack, LLC	Holding company.
TE Notrees, LLC	Holding company.
TE Ocotillo, LLC	Holding company.
TE Silver Sage, LLC	Holding company.
Teak Mountain Products, LLC	Coal-based synthetic fuel production business.
TEC Aguaytia, Ltd.	Bermuda holding entity with indirect ownership interest in the Aguaytia project in Peru.
Termoselva S. R. L.	Peruvian limited liability company that owns and operates facility generating electricity in the Peruvian Amazon Basin.
Texas Eastern (Bermuda) Ltd.	Bermuda holding company with investments in international ventures.
Texas Eastern Arabian Ltd.	Investments in Texas Eastern International Venturers, Ltd. and National Methanol Company
The Duke Energy Foundation	To receive, administer, and make donation of funds for educational, scientific, and charitable purposes.
Three Buttes Windpower, LLC	Develop, construct, own and operate the Campbell Hill Wind power project near Casper, Wyoming
Top of the World Wind Energy LLC	Developing wind power project in Wyoming
Tower Management, Inc	Holds communication tower assets
TRES Timber, LLC	Hold land for future project use

Tri-State Improvement Company	Acquiring and holding property in Ohio, Kentucky, and Indiana for substations, electric and gas rights of way, office space, and other uses in connection with the utility business of The Cincinnati Gas & Electric Company and its utility subsidiaries. O'Neill, Teri 3/10/2004 3:53:24 PM
Tsavo Power Company Limited	Power plant at the Port of Mombasa, Kenya's main seaport. The facility sells power to Kenya Power and Lighting Corporation through a Purchased Power Agreement.
UK Electric Power Limited	The Company may carry on any lawful business, purpose or activity.
Wateree Power Company	Currently Inactive.
Western Carolina Power Company	Currently Inactive.
Willow Creek Wind Energy LLC	Developing wind power project in Colorado
Willow Mountain Products, LLC	Coal-based synthetic fuel production business.

KRS 278.2205(2)(c)

C. A list of services and products provided by the utility, an identification of each as regulated or non-regulated, and the cost allocation method generally applicable to each category.

1. Regulated Services / Products offered by Duke Energy Kentucky

Duke Energy offers retail electric and gas service in accordance with Commission-approved tariffs. Duke Energy Kentucky also offers several regulated energy efficiency related services and products within the Commonwealth. Duke Energy Kentucky receives compensation for these services pursuant to Commission approval through its Demand-Side Management ("DSM") tariff riders. These services include the following:

- Residential Conservation & Energy Education
- Refrigerator Replacement
- Home Energy House Call
- Power Manager (Direct Load Control)
- Residential Comprehensive Energy Education Program (NEED)
- Payment Plus (Energy Education & Bill Assistance)
- Energy Efficiency Website
- Energy Assistance Program
- C & I High Efficiency Incentive (for Businesses and Schools)
- PowerShare
- Personalized Energy Report[15]
- Small C&I rebate program
- Energy Star Products

[15] The Personalized Energy Report was a pilot program prior to 2007, but was not offered in 2007. Duke Energy Kentucky has included the Personalized Energy Report as part of its 2008 DSM offerings.

- Gas Weatherization Program
- PilotLite[16]

Attachment C-1 contains a description of the regulated products/ services offered by Duke Energy Kentucky. With the exception of the PilotLite and Gas Weatherization programs, all of the above regulated programs are part of Duke Energy Kentucky's DSM Program. Since 1996, Duke Energy Kentucky has used the DSM Riders to recover the direct costs associated with its regulated DSM programs. In this way, Duke Energy Kentucky's customers are only charged for the costs that are actually incurred to deliver Duke Energy Kentucky's DSM programs. The riders are based on Duke Energy Kentucky's forecasted (budget) costs. Duke Energy Kentucky reconciles the rider on an annual basis and any over or under-collections of rider revenues are reflected in the next annual filing. The costs are allocated to the program participants by rate/ revenue class.

PilotLite is a service offered to customers and provided by request. Costs are charged directly to customers requesting the service.

In addition to these DSM products and services, Duke Energy Kentucky offers various tariffed gas and electric services. The Company's tariffs are publicly filed with the Commission. The costs for these services are allocated to customer class pursuant to cost of service studies approved by the Commission in the company's rate proceedings.

2. Non-regulated Products and Services offered by Duke Energy Kentucky

Attachment C-1 also contains a description of the non-regulated products/ services offered by Duke Energy Kentucky. Duke Energy Kentucky offers two non-regulated products/ services in the Commonwealth: (1) Underground Protection; and (2) Residential Strike Stop. These services are operated by Duke Energy One, Inc., a non-regulated affiliate, pursuant to the Operating Company/

[16] Duke Energy Kentucky's PilotLite program is operated pursuant to Public Service Commission approval rather than by tariff.

Nonutility Companies Service Agreement. *Attachment E-1.* Costs are directly assigned to customers on a one-to-one basis.

REGULATED AND NON-REGULATED SERVICES AND PRODUCTS OF DUKE ENERGY KENTUCKY

Residential Conservation & Energy Education (low-income weatherization)

This program provides energy savings installations and energy education in homes of gas & electric customers in the Kentucky service territory that qualify at 150% of federal income poverty guidelines. Only those measures critical to the energy efficiency of the dwelling and its effect on the health and safety of the occupants shall be provided.

The services performed are based on the home's specific energy usage and weatherization needs. Customers receive a furnace or heat pump clean and tune-up, energy-efficient light bulbs, energy-saving tips and if needed, a hot water heater wrap, waterbed mattress covers, weather stripping and pipe wrap. Depending on the condition of the home and its energy usage, other services may include duct sealing, wall and attic insulation and other air leakage sealing measures.

Refrigerator Replacement Program (tied to Weatherization program above)

Duke Energy Kentucky offers free installation of energy-efficient refrigerators for those customers meeting income qualifying guidelines and who own single-family homes and participate in the weatherization program.

Residential Home Energy House Call

The Home Energy House Call program is a free service for Duke Energy Kentucky customers that will provide personalized energy information unique to a customer's home and energy practices. A trained energy specialist will visit the home to conduct a thorough in-home analysis. The energy specialist will:

- Analyze the total home energy usage
- Check the home for air leaks
- Examine insulation levels
- Review appliances and heating/cooling system

From the information collected, a custom-tailored report detailing steps to increase efficiency and reduce energy bill is prepared and mailed to the customer within 10 days.

Power Manager (Direct Load Control)

Power Manager is a voluntary program that provides an economic incentive to customers for reducing air conditioning use during peak demand periods. Duke Energy Kentucky installs a switch, at no cost to the customer, next to the air-conditioner unit outside of the home. This device will cycle the air conditioner off and on during the occasional summer hours when the demand for electricity is the highest. These cycling events are most likely to occur on weekdays, Monday through Friday, between mid-morning and early evening, during the summer months of May through September. The air conditioner is cycled off and then back on, at thirty-minute interval for the length of the cycling event. The Power Manager Program incentive is paid annually and may include up to a $35 installation credit.

Residential Comprehensive Energy Education Program (NEED)

NEED provides training, support and curriculum materials for teachers along with hands-on energy efficiency kits for student inquiry studies.

Payment Plus (Energy Education & Bill Assistance)

This program was developed to help customers reduce their bills and gain control of financial condition while allowing the utility to avoid disconnections and reduce write-offs. The purpose of the program is to impact participants' behavior to encourage meeting utility bill payments, eliminate arrearages and to generate energy conservation impacts. The program has three parts: (1) Energy and Budget Counseling- to help customers understand how to control energy consumption and manage household bills through a combined counseling / education approach; (2) Weatherization; and (3) Bill Assistance- providing incentives for customer participation where customers could earn up to $500 in credit for completing all steps in the program.

Energy Efficiency Website

Customers can complete an online Quick-e-audit and receive a free energy efficiency kit. The Quick-e-Audit provides customized energy usage projections for a customer's home.

Gas Weatherization

This program is designed for income-eligible gas customers to receive free home weatherization. Duke Energy Kentucky has designated funds specifically for improving the energy efficiency of customers' homes and helping them reduce their monthly gas heating bills.

The services performed are based on the home's specific energy usage and weatherization needs. Typical services may include: energy-saving tips, a hot water heater wrap, weather stripping and pipe wrap. Depending on the condition of your home and its energy usage, other services may include duct sealing, wall and attic insulation and other air leakage sealing measures.

Personalized Energy Report

The Personalized Energy Report (PER) will provide Duke Energy Kentucky's customers with a customized report aimed at helping them better manage their energy costs. Participants will receive energy tips and information regarding how they personally use energy in their home. In addition, they receive an "Energy Efficiency Starter Kit" which consists of nine easily installed measures. Both the energy survey completed by the customer and the personalized energy report generated from the survey are educational tools developed to stimulate the customer to think about how they use energy and provide them with tools and information to lower their energy costs.

Small Commercial/Industrial Energy Efficiency Incentive Program:

Duke Energy offers cash incentives to its small Commercial and Industrial customers and Schools to encourage the purchase and installation of high efficiency equipment. These incentives are available for the installation of high efficiency lighting fixtures, motors and cooling systems.

To qualify customers must:

- Be a non-residential Duke Energy Kentucky electric customer not in rate group TT (Time-of-Day Rate for Service at Transmission Voltage.)

- Submit an application to the Company within 90 days after new equipment is installed and operational.

Energy Star®

The Energy Star program provides market incentives and support through retailers to build market share and encourage consumer purchase and use of Energy Star products. The program targets residential customers' purchase of specified technologies through instant rewards at retail stores at the time of purchase and special events in the community.

PowerShare

PowerShare is the brand name for Duke Energy Kentucky's peak Load Management Program ("Rider PLM"). The program is available to customers able to provide a minimum 100 kW of load response upon exercise of an option by Duke Energy Kentucky. Qualifying Customers may choose to participate in either a CallOption or a QuoteOption. The program is voluntary and offers customers the opportunity to reduce their electric costs by managing their electric usage during peak load periods. Under the CallOption, customers and Duke Energy Kentucky enter into a service agreement which specifies the terms and conditions under which the customer agrees to reduce usage. The customer agrees to reduce its demand or provide generation for purchase by Duke Energy Kentucky in return for a credit or "option premium" for energy reduced or generation provided. Under the QuoteOption, Duke Energy Kentucky will offer a bill credit during an event period in exchange for the customer's agreement to reduce demand or provide generation. This program is voluntary in that the customer has the ability to choose to reduce its usage or provide generation during an event period. No option premium is paid.

PilotLite

This is a regulated service provided through Duke Energy Kentucky that assists customers that need help lighting a pilot light or require minor repairs to their gas appliances. Customers can request this service 24 hours a day for the charge for lighting 2 pilot lights is $50 with each additional $25. Thermocouple replacement is $17. Revenue is split 50-50 with the Company's service delivery organization.

StrikeStop

Residential:

This program provides a residential surge protection device that is installed behind the customer's electric meter. The surge protector is sold to the homeowner. There are two units available for residential consumers, a 200 amp unit (approximately $168 plus tax), and a 400 amp unit (approximately $249.99 plus tax) on terms that can extend to 24 months. The program also includes monetary coverage component which protects homeowners from surge damage that enters the home, but doesn't pass through the StrikeStop device. Monetary coverage is $1.99 per month for the 200 amp unit and $2.99 per month for the 400 amp unit, for so long as the customer wants protection.

Commercial:

A small Commercial StrikeStop program began in 2007. The purchase price for customers is $349.00 per unit for small commercial customers who use 400 amps of service or less. The Company does not offer monetary coverage for commercial customers.

Electric Underground Protection Program

In Kentucky the underground electrical service line from the transformer or junction box to the meter is the customer's responsibility. Under the Electric Underground Protection Program, if an enrolled customer's underground service line fails, Duke Energy Kentucky will repair the line at no cost to the customer with coverage limited to $3,000. Customers may choose one of two payment plans for the service. Customers may either pay $2.99 per month for coverage or an annual billing option of $29.99.

(REMINDER OF PAGE INTENTIONALLY LEFT BLANK)

KRS 278.2205(2)(d)

D. A list of incidental, non-regulated activities that are subject to the provisions of KRS 278.2203(4).

Attachment D-1 consists of a list of incidental and non-regulated activities of Duke Energy Kentucky, as reported previously in the Company's annual report for the calendar year 2008. These are non-regulated products or services that Duke Energy Kentucky provides to non-affiliated third parties. The list includes a description of the activity as well as a total of the non-regulated revenue to Duke Energy Kentucky for the calendar year 2008. The incidental non-regulated activities described in the following document are reasonably related to Duke Energy Kentucky's regulated services because these activities all involve services that either: (1) are closely associated with Duke Energy Kentucky's supplying and delivering gas and electric service to customers; (2) facilitate use of Duke Energy Kentucky's trenches to cable and telecom providers; or (3) provide for revenue from leasing excess utility facilities.

(REMINDER OF PAGE INTENTIONALLY LEFT BLANK)

INCIDENTAL AND NON-REGULATED ACTIVITIES OF DUKE ENERGY KENTUCKY[17]

Activity	Revenues
Gas Curb to Meter & Misc. Replacement & Repair Optional service offered to customers who need to have their customer-owned curb-to-meter service line replaced, maintained or repaired.	4,200
Joint Underground Trench – Telephone, internet and cable wiring Offers telecom and cable providers the option of placing their facilities in the same underground trench as those of the Company.	193,654
Pilot Lights Optional service offered to customers whose furnace or water heater pilot light needs to be re-lit. Usually offered when customer smells gas and calls the Company to investigate where the cause of the gas odor is an unlit pilot light.	1,000
Pole Sets Optional service offered to private "utility pole" owners whereby the Company will use its equipment and expertise to set a customer-owned pole into the ground.	67,420
Property Management – Lease/Rental General lease of Company land to another.	1,048,835
Repair Underground Electric – Permanent/Temp Service Optional service offered to customers who need to have their customer-owned underground electric line replaced, maintained or repaired.	12,693
Underground Repair Protection	5,528
Miscellaneous Work Performed on Customer Premises	99,253
Total 2008 Duke Energy Kentucky Non-Utility/Non-Regulated Revenue	1,432,583
Total 2008 Duke Energy Kentucky Revenue	500,129,281
Non-Utility/Non-Regulated % of Total Revenue	.29%

[17] 2008 Annual Report For Duke Energy Kentucky, filed March 31, 2009

KRS 278.2205(2)(e)

E. A description of the nature of transactions between the utility and the affiliate.

1. General Transactions between Duke Energy Kentucky and its Affiliates.

Transactions between Duke Energy Kentucky and its affiliates must occur in accordance with KRS 278.2207. Specifically, unless otherwise approved by the Commission, Duke Energy Kentucky provides tariffed services and products to an affiliate pursuant to the tariffed rate. And nontariffed items are priced at the Duke Energy Kentucky's fully distributed cost but in no event less than market, or in compliance with the utility's existing USDA, SEC, or FERC approved cost allocation methodology. Unless otherwise approved by the Commission, services and products provided by an affiliate to Duke Energy Kentucky are to be priced at the affiliate's fully distributed cost but in no event greater than market or in compliance with the utility's existing USDA, SEC, or FERC approved cost allocation methodology. Deviations from KRS 278.2207 may be granted by the Commission if the Commission determines the transaction to be in the public interest.

2. Services and Transactions Between Duke Energy Kentucky and Non-utility Affiliates

Duke Energy Kentucky and its non-utility affiliates are authorized by the Commission to provide services to/ from each other pursuant to the Operating Company/ Nonutility Companies Service Agreement. This agreement was approved by the Commission on November 27, 2005, in Case No 2005-228, as part of the merger of Duke Energy Corporation and Cinergy Corporation. *Attachment E-1.*[18] The services provided by Duke Energy Kentucky to its non-utility affiliates may include, but are not limited to the following:

[18] On September 1, 2008 the Operating Company/ Non-Utility Company Service Agreement was updated to reflect names changes to the list of signatory Nonutility Companies that occurred after A January 2, 2007, the execution of the prior agreement. The terms of the updated agreement are substantially similar to the terms of initial agreement. On January 2, 2007, the Operating Company/ Non-Utility Company Service Agreement was updated to reflect the name change of the Union Heat Light and Power Company to Duke Energy Kentucky, Inc., and to update the list of signatory Nonutility Companies that occurred after April 3, 2006, the execution of the prior agreement. The terms of the updated agreement are substantially similar to the terms of initial agreement.

- Engineering and Construction;
- Operations and Maintenance;
- Installation Services;
- Equipment testing;
- Generation Technical Support;
- Environmental, Health and Safety; and
- Procurement Services.

The types of services that may be provided by non-utility affiliates to Duke Energy Kentucky, include, but are not limited to, the following:

- Information Technology Services;
- Monitoring;
- Surveying;
- Inspecting;
- Constructing;
- Locating and Marking of Overhead and Underground Utility Facilities;
- Meter Reading;
- Materials Management;
- Vegetation Management; and
- Marketing and Customer Relations.

By the terms of the Operating Company/ Nonutility Companies Service Agreement, requests for services will be made in writing, in substantially the same form as set forth in "Exhibit A" of the Agreement. Compensation for any service rendered between Duke Energy Kentucky and its non-utility affiliates are the fully embedded cost thereof (*i.e.*, the sum of: (i) direct costs; (ii) indirect

costs; and (iii) costs of capital), except to the extent otherwise required by Section 482 of the Internal Revenue Code. Each client company is required to reasonably cooperate with each respective service provider to record billings and payments in their common accounting systems. In February 2008, the Federal Energy Regulatory Commission ("FERC") issued Order No 707, which expands FERC's asymmetrical pricing rules to include transfers of non-power goods and services between a franchised utility and its non-utility affiliates. Prior to Order No 707, FERC's asymmetrical pricing rules only applied to transfers of non-power goods and services between franchised utilities and non-regulated utility affiliates. The FERC ruling excepts pre-existing affiliate agreements and state affiliate pricing rules that are stricter than the FERC's pricing restrictions.

(REMINDER OF PAGE INTENTIONALLY LEFT BLANK)

3. Services and Transactions Between Duke Energy Kentucky and Utility Affiliates

Duke Energy Kentucky and certain of its regulated utility affiliates are authorized by the Commission to provide and receive services to or from each other in the normal course of conducting business. These services are provided pursuant to an Operating Companies Service Agreement. This agreement was approved by the Commission on November 27, 2005, in Case No 2005-228, as part of the merger of Duke Energy Corporation and Cinergy Corporation. *Attachment E-2.*[19] The services which may be provided between affiliate operating companies may include, but are not limited to the following:

- Engineering and Construction;
- Operations and Maintenance;
- Installation Services;
- Equipment Testing;
- Generation Technical Support;
- Environmental, Health and Safety; and
- Procurement Services.

By the terms of the Operating Companies Service Agreement, compensation for any service rendered between utility affiliates is the fully embedded cost thereof (*i.e.*, the sum of: (i) direct costs, (ii) indirect costs and (iii) costs of capital), except to the extent otherwise required by Section 482 of the Internal Revenue Code. The Operating Companies Service Agreement provides exceptions to the general compensation described above for transactions involving Duke Energy Carolinas and which meet certain transaction value thresholds. This is due to the North Carolina Code of Conduct.

[19] The Operating Companies Service Agreement was updated on September 1, 2008 to reflect the Operating Companies share a common accounting system, and that the entry of appropriate transactions reflecting the costs for services rendered satisfies the billing requirement in Section 3.1. The terms and conditions of the Agreement are substantially similar to the original.

Transactions not falling under the service agreements and outside of the limits established must be approved by the state Commission. These limits are contained in Attachment B to the agreement. Each client company is required to reasonably cooperate with each respective service provider to record billings and payments in their common accounting systems.

4. Services Provided By Duke Energy Business Services to Duke Energy Kentucky

Duke Energy Business Services[20] provides a variety of administrative, management and support services to its utility affiliates, including Duke Energy Kentucky. These services are performed pursuant to the Service Company Utility Service Agreement. This agreement was approved by the Commission on November 27, 2005, in Case No 2005-228, as part of the merger of Duke Energy Corporation and Cinergy Corporation. *Attachment E-3.*[21] Services provided by the service companies include, but are not limited to the following:

- Information Systems;
- Meters;
- Transportation;
- System Maintenance;
- Marketing and Customer Relations;
- Transmission and Distribution Engineering and Construction;
- Power and Gas Engineering and Construction;
- Human Resources;

[20] As of July 1, 2008, Duke Energy Shared Services and Duke Energy Business services were merged into one Service Company retaining the Duke Energy Business Services name.

[21] The Service Company Utility Service Agreement was updated on September 1, 2008 to reflect the Service Company will act as agent on behalf of the client companies in paying certain costs incurred on behalf of the client companies, and that such costs get passed through to the client companies and that the Service Company shares a common accounting system with the client companies, and that the entry of appropriate transactions reflecting the costs for services rendered satisfied the filling requirement in this section The terms of the Agreement are substantially similar to the prior agreement entered into as of April 3, 2006.

- Materials Management;
- Facilities;
- Accounting;
- Power and Gas Planning and Operations;
- Public Affairs;
- Legal;
- Rates;
- Finance;
- Rights of Way;
- Internal Auditing;
- Environmental, Health and Safety;
- Fuels;
- Investor Relations;
- Planning; and
- Executive.

By the terms of the Service Company Utility Service Agreement, compensation for any service rendered by the Service Company to its utility affiliates is the fully embedded cost thereof (*i.e.*, the sum of: (i) direct costs; (ii) indirect costs; and (iii) costs of capital), except to the extent otherwise required by Section 482 of the Internal Revenue Code. Each client company is required to reasonably cooperate with each respective service provider to record billings and payments in their common accounting systems. (Note: Any services provided by Duke Energy Kentucky to the Service Company are provided pursuant to the terms of Operating Company/ Nonutility Companies Service Agreement described above).

5. Utility Money Pool Agreement

The Utility Money Pool Agreement authorizes Duke Energy, Duke Energy Business Services and Duke Energy's utility operating companies (including Duke Energy Kentucky) to participate in a money pool arrangement to better manage cash and working capital requirements. *Attachment E-4*. This agreement was approved by the Commission on November 27, 2005, in Case No 2005-228, as part of the merger of Duke Energy Corporation and Cinergy Corporation. This Agreement was revised on November 8, 2008 to reflect the deletion of Duke Energy Shared Services, which was merged into Duke Energy Business Services. The substantive terms of the Agreement have not been changed. Under this arrangement, those companies with surplus short-term funds provide short-term loans to affiliates (other than Duke Energy and Cinergy) participating under this arrangement. This surplus cash may be from internal or external sources.

6. Purchase and Sale Agreement

Duke Energy's utility operating companies, Duke Energy Indiana, Duke Energy Ohio and Duke Energy Kentucky, entered into an Amended and Restated Purchase and Sale Agreement with Cinergy Receivables Company LLC ("Receivables"), as of March 31, 2002. *Attachment E-5.* This agreement allows the operating companies to sell their retail accounts receivable to Receivables. The latest amendment to this agreement was effective on March 28, 2008.

7. Agreement for Filing Consolidated Income Tax Returns and for Allocation of Consolidated Income Tax Liabilities and Benefits

Duke Energy Corp. and its subsidiaries, including Duke Energy Kentucky, have entered into an Agreement for Filing Consolidated Income Tax Returns and for Allocation of Consolidated Income Tax Liabilities and Benefits, effective for consolidated tax year 2006 and following. *Attachment E-6*. This agreement was approved by the Commission on November 27, 2005, in Case No 2005-228, as part of the merger of Duke Energy Corporation and Cinergy Corporation. Under

this agreement, Duke Energy and its subsidiaries agree to join annually in the filing of a consolidated Federal income tax return and to allocate the consolidated Federal income tax return and to allocate the consolidated Federal income tax liabilities and benefits among the members of the consolidated group in accordance with the Provisions of the Agreement. The Agreement provides generally that consolidated Federal, state and local income tax liabilities and benefits will be allocated, where appropriate, among members by calculating each member's taxable income as if that member had filed a separate return on the same basis as used in the applicable consolidated return. This agreement was recently updated to reflect changes in names to parties and the clarification of definitions and terms which were inadvertently omitted from the prior version.

8. Intercompany Asset Transfer Agreement

On July 18, 2008 the Kentucky Public Service Commission approved an Intercompany Asset Transfer Agreement whereby Duke Energy Kentucky may enter into asset transfer transactions with its regulated utility affiliates at the transferring party's cost or through in-kind replacements, providing the transfer does not jeopardize the transferring party's ability to provide utility service. *Attachment E-7.* The Commission approved this agreement under the condition that Duke Energy Kentucky agree that it would continue to seek Commission approval under KRS 278.218 over all transactions that have an original book value of over $1,000,000 and that are to be transferred for reasons other than obsolescence or if the parts are to be used to continue to provide service to the utility customers. Further, Duke Energy Kentucky agreed that as a condition of approval of this agreement the Company would abide by this approval threshold for transfers involving gas assets.[22] Duke Energy Kentucky is required to maintain a list of all transactions under the Intercompany

[22] KRS 278.218 by its express language only applies to electric utility assets. As a combination gas and electric utility, Duke Energy Kentucky agreed in Case No 2008-122 that it would follow the standard under KRS 278.218 for gas assets as well.

Asset Transfer Agreement in its Cost Allocation Manual. A copy of the transactions occurring in 2008 is contained in Attachment E-13.

9. Miscellaneous Service Agreements

Duke Energy Kentucky also receives certain products and services from Duke Energy Ohio related to the transfer of three generating stations from Duke Energy Ohio to Duke Energy Kentucky. The Commission approved the transfer of these generating stations in Case No. 2003-00252 and executed copies of these contracts are on with the Commission in that proceeding.[23] The relevant agreements are: (1) Facilities Operation Agreement between The Cincinnati Gas & Electric Company and The Union Light, Heat and Power Company dated September 27, 2004 *Attachment E-8*; (2) Miami Fort 6 Operation Agreement between The Cincinnati Gas & Electric Company and The Union Light, Heat and Power Company dated January 25, 2006 *Attachment E-9*; and (3) Gas and Propane Services Agreement with Respect to Woodsdale Generating Station By and Between The Cincinnati Gas & Electric Company and The Union Light, Heat and Power Company dated January 25, 2006 *Attachment E-10.*

Under the Facilities Operation Agreement, Duke Energy Kentucky is permitted to use certain equipment owned and operated by Duke Energy Ohio necessary to provide service, including certain step-up transformer banks at the three generating stations. In exchange for the right to use the equipment, Duke Energy Kentucky pays a monthly fee to Duke Energy Ohio to recover its costs of owning, operating, and maintaining the facilities.

Under the Miami Fort 6 Operating Agreement, Duke Energy Ohio, as an agent for Duke Energy Kentucky, agrees to operate the Miami Fort Unit 6 generating station on Duke Energy

[23] Effective January 1, 2008, former employees of Duke Energy Ohio, Inc., located at Duke Energy Kentucky's East Bend and Woodsdale generating stations were transferred to Duke Energy Kentucky. Previously, services provided to Duke Energy Kentucky by these employees were performed pursuant to the terms and conditions of the various service agreements. As of January 1, 2008,these employees are now Duke Energy Kentucky employees.

Kentucky's behalf. Duke Energy Ohio provides materials, fuel, equipment, and services as required. In exchange, Duke Energy Kentucky agrees to pay Duke Energy Ohio for any and all expenses and costs, including applicable overheads associated with running the generating station.

Under the Gas and Propane Services Agreement, Duke Energy Ohio agrees to provide certain natural gas and propane operation and management services at Duke Energy Kentucky's Woodsdale Station. The services are defined by the terms of the contract. In return for such services, Duke Energy Kentucky pays Duke Energy Ohio a sum equal to Duke Energy Ohio's fully allocated costs on a monthly basis.

On April 24, 2007, Duke Energy Kentucky and its parent, Duke Energy Ohio, entered into an Agreement for Gypsum and FGD Waste Material Disposal Services to be performed at Duke Energy Kentucky's Eastbend Landfill Facility. Under this agreement, Duke Energy Kentucky is paid $21.95/ ton for the disposal services, representing the current market price based upon similar services provided at local landfills. Under the agreement, the price is adjustable on an annual basis based upon price comparison to the nearest landfills. A copy of this Agreement is included as Attachment E-11.

10. <u>2008 Services</u>

During 2008, there have been transactions provided pursuant to the agreements referenced in items 1 through 7 above. Generally, the transactions that have occurred have been related to the provision of services between affiliates in the form of employee time devoted to various activities. Examples of transactions where Duke Energy Kentucky is the recipient of services from affiliates are as follows:

- Duke Energy Ohio employees provide services for Miami Fort Unit 6 generating station and Woodsdale station

- Duke Energy Ohio employees provide services for operation and maintenance of the electric transmission and distribution system
- Duke Energy Ohio employees provide services for operation and maintenance of the gas distribution system
- Duke Energy Indiana employees provide services for coal and scrubber sampling and testing at East Bend Station
- Duke Energy Carolinas employees provide services for customer service call center operations
- Duke Energy Carolinas employees provide services for metallurgical laboratory analysis
- Duke Energy Carolinas employees provide services for emergency service storm restoration

Examples of transactions where Duke Energy Kentucky is the provider of services to affiliates are as follows:

- Duke Energy Kentucky employees provide services to Duke Energy Carolinas for customer service call center operations
- Duke Energy Kentucky employees provide services to Duke Energy One for equipment installation, transmission and distribution construction and maintenance
- Duke Energy Kentucky employees provide services to Duke Energy Indiana for administrative, training, and support services at various combustion turbine sites

These examples do not include the description of services rendered under the Service Company Utility Service Agreement because, under Duke Energy's holding company structure, it is contemplated that service company employees are involved in the day to day operations of all utility operating companies under Duke Energy Corporation and provide substantially back-office support services. For the purposes of the present report, it was determined that services and products

provided by Duke Energy Kentucky to, or received by Duke Energy Kentucky from other affiliated companies was of greater relevance to the report..

Attachment E-12 is a copy of Duke Energy Kentucky's Federal Energy Regulatory Commission ("FERC") affiliate transaction report for 2008. This report includes a list of the 2008 goods and services provided by Duke Energy Kentucky for its affiliates, and goods and services provided by the affiliates to Duke Energy Kentucky. This list includes the value of services rendered under the Service Company Utility Service Agreement.

AMENDED AND RESTATED OPERATING COMPANY/NONUTILITY COMPANIES SERVICE AGREEMENT

This Amended and Restated Operating Company/Nonutility Companies Service Agreement (this "Agreement") dated September 1, 2008 (the "Effective Date") by and among Duke Energy Kentucky, Inc., a Kentucky corporation ("Operating Company"), and the respective associate nonutility companies listed on the signature pages hereto (each, a "Nonutility Company") supersedes and restates in its entirety the Operating Company/Nonutility Service Agreement entered into between the Operating Company and each Nonutility Company dated January 2, 2007.

WITNESSETH:

WHEREAS, Duke Energy Corporation ("Duke Energy") is a Delaware corporation;

WHEREAS, Operating Company is a subsidiary of Duke Energy and a public utility company;

WHEREAS, each Nonutility Company is a subsidiary of Duke Energy that is or was formed to engage in any one or more non-regulated businesses;

WHEREAS, certain non-regulated public utilities were added in error to the Operating Company/Nonutility Companies Service Agreement dated January 2, 2007 and are being removed in this Agreement;

WHEREAS, in the ordinary course of their businesses, Operating Company and each Nonutility Company maintain organizations of employees with technical expertise in matters affecting public utility companies and related businesses and own or acquire related equipment, facilities, properties and other resources; and

WHEREAS, subject to the terms and conditions herein set forth, and taking into consideration the parties' utility responsibilities or primary business operations, as the case may be, the parties hereto are willing, upon request from time to time, to perform such services, and in connection therewith to make available such equipment, facilities, properties and other resources, as they shall request from each other;

NOW, THEREFORE, in consideration of the premises and the mutual covenants herein contained, the parties agree as follows:

ARTICLE 1. PROVISION OF SERVICES; LOANED EMPLOYEES

Section 1.1 Provision of Services.

(a) Upon receipt by a party hereto (in such capacity, a "Service Provider") of a written request in substantially the form attached hereto as Exhibit A (a "Service Request") from another party hereto (in such capacity, a "Client Company") for the provision to such Client Company of such services as are specified therein, including if applicable use of any related equipment, facilities,

properties or other resources (collectively, "Services"), the Service Provider, if in its sole discretion it has available the personnel or other resources needed to perform the Service Request without impairment of its utility responsibilities or business operations, as the case may be, shall furnish such Services to the Client Company at such times, for such periods and in such manner as the Client Company shall have so requested and otherwise in accordance with the provisions hereof.

(b) For purposes of this Agreement, "Services" may include, but shall not be limited to: (i) in the case of Services that may be provided by Operating Company hereunder, services in such areas as engineering and construction; operations and maintenance; installation services; equipment testing; generation technical support; environmental, health and safety; and procurement services;[1] and (ii) in the case of Services that may be provided by Nonutility Companies hereunder, services in such areas as information technology services; monitoring, surveying, inspecting, constructing, locating and marking of overhead and underground utility facilities; meter reading; materials management; vegetation management; and marketing and customer relations.

(c) For the avoidance of doubt, affiliate transactions involving sales or other transfers of assets, goods, energy commodities (including electricity, natural gas, coal and other combustible fuels) or thermal energy products are outside the scope of this Agreement.

Section 1.2 Loaned Employees.

(a) If specifically requested in connection with the provision of Services, Service Provider shall loan one or more of its employees to such Client Company, provided that such loan shall not, in the sole discretion of Service Provider, interfere with or impair Service Provider's utility responsibilities or business operations, as the case may be. After the commencement thereof, any such loaned employees may be withdrawn by Service Provider from tasks duly assigned by Client Company, prior to completion thereof as contemplated in the associated Service Request, only with the consent of Client Company (which shall not be unreasonably withheld or delayed), except in the event of a demonstrable emergency requiring the use of any such employees in another capacity for Service Provider.

(b) While performing work on behalf of Client Company, any such loaned employees shall be under its supervision and control, and Client Company shall be responsible for their actions to the same extent as though such persons were its employees (it being understood that such persons shall nevertheless remain employees of Service Provider and nothing herein shall be construed as creating an employer-employee relationship between any Client Company and any loaned employees). Accordingly, for the duration of any such loan, Service Provider shall continue to provide its loaned employees with the same payroll, pension, savings, tax withholding, unemployment, bookkeeping and other personnel support services then being provided by Service Provider to its other employees.

ARTICLE 2. SERVICE REQUESTS

Section 2.1 Procedure. All Services (including any loans of employees) (i) shall be performed in accordance with Service Requests issued by or on behalf of Client Company and accepted by Service Provider and (ii) shall be assigned to applicable activities, processes, projects, responsibility centers or on other appropriate bases to enable specific work to be properly assigned. Service Requests shall be as specific as practicable in defining the Services requested. Client Company shall have the right from time to time to amend or rescind any Service Request, *provided* that (a) Service Provider consents to any amendment that results in a material change in the scope of Services to be provided, (b) the costs associated with an amended or rescinded Service Request shall include the costs incurred by Service Provider as a result of such amendment or rescission, and (c) no amendment or rescission of a Service Request shall release Client Company from any liability for costs already incurred or contracted for by Service Provider pursuant to the original Service Request, regardless of whether any labor or the furnishing of any property or other resources has been commenced or completed.

ARTICLE 3. COMPENSATION FOR SERVICES

Section 3.1 Cost of Services. As compensation for any Services rendered to it pursuant to this Agreement, Client Company shall pay to Service Provider the fully embedded cost thereof (i.e., the sum of (i) direct costs, (ii) indirect costs and (iii) costs of capital), except to the extent otherwise required by Section 482 of the Internal Revenue Code. As soon as practicable after the close of each month, Service Provider shall render to each Client Company a statement reflecting the billing information necessary to identify the costs charged for that month. By the last day of each month, Client Company shall remit to Service Provider all charged billed to it.

ARTICLE 4. LIMITATION OF LIABILITY; INDEMNIFICATION

Section 4.1 Limitation of Liability/Services. In performing Services pursuant to Section 1.1 hereof, Service Provider will exercise due care to assure that the Services are performed in a workmanlike manner in accordance with the specifications set forth in the applicable Service Request and consistent with any applicable legal standards. The sole and exclusive responsibility of Service Provider for any deficiency therein shall be promptly to correct or repair such deficiency or to re-perform such Services, in either case at no additional cost to Client Company, so that the Services fully conform to the standards described in the first sentence of this Section 4.1. No Service Provider makes any other warranty with respect to the provision of Services, and each Client Company agrees to accept any Services without further warranty of any nature.

Section 4.2 Limitation of Liability/Loaned Employees. In furnishing Services under Section 1.2 hereof (i.e., involving loaned employees), neither the Service Provider, nor any officer, director, employee or agent thereof, shall have any responsibility whatever to any Client Company receiving such Services, and Client Company specifically releases Service Provider and such persons, on account of any claims, liabilities, injuries, damages or other consequences arising in connection with the provision of such Services under any theory of liability, whether in contract, tort (including negligence or strict liability) or otherwise, it being understood and agreed that any such loaned employees are made available without warranty as to their suitability or expertise.

Section 4.3 Disclaimer. WITH RESPECT TO ANY SERVICES PROVIDED UNDER THIS AGREEMENT, THE SERVICE PROVIDER THEREOF MAKES NO WARRANTY OR REPRESENTATION OTHER THAN AS SET FORTH IN SECTION 4.1, AND THE PARTIES HERETO HEREBY AGREE THAT NO OTHER WARRANTY, WHETHER STATUTORY, EXPRESS OR IMPLIED (INCLUDING BUT NOT LIMITED TO ALL WARRANTIES OF MERCHANTABILITY AND FITNESS FOR A PARTICULAR PURPOSE AND WARRANTIES ARISING FROM COURSE OF DEALING OR USAGE OF TRADE), SHALL BE APPLICABLE TO THE PROVISION OF ANY SUCH SERVICES. THE PARTIES FURTHER AGREE THAT THE REMEDIES STATED HEREIN ARE EXCLUSIVE AND SHALL CONSTITUTE THE SOLE AND EXCLUSIVE REMEDY OF ANY PARTY HERETO FOR A FAILURE BY ANY OTHER PARTY HERETO TO COMPLY WITH ITS WARRANTY OBLIGATIONS.

Section 4.4 Indemnification.

(a) Indemnification In Respect of Services Provided by Operating Company.

(i) In circumstances where Operating Company is a Service Provider: (x) subject to subparagraph (ii) of this Section 4.4(a), Service Provider shall release, defend, indemnify and hold harmless each Client Company, including any officer, director, employee or agent thereof, from and against, and shall pay the full amount of, any loss, liability, claim, damage, expense (including costs of investigation and defense and reasonable attorneys' fees), whether or not involving a third-party claim (collectively, "Damages"), incurred or sustained by or against Service Provider or any such Client Company arising, directly or indirectly, from or in connection with Service Provider's negligence or willful misconduct in the performance of the Services, and (y) each Nonutility Company that is a Client Company with respect to such Services shall release, defend, indemnify and hold harmless Service Provider, including any officer, director, employee or agent thereof, from and against, and shall pay the full amount of, any Damages incurred or sustained by or against Service Provider or any such Client Company arising, directly or indirectly, from or in connection with Service Provider's negligence or willful misconduct in the performance of the Services, to the extent such Damages are not covered by Service Provider's indemnification obligation as provided in the preceding clause (x) or exceed the liability limits provided in subparagraph (ii) of this Section 4.4(a).

(ii) Notwithstanding any other provision hereof, in circumstances where Operating Company is a Service Provider: (x) Service Provider's total liability hereunder with respect to any specific Services shall be limited to the amount actually paid to Service Provider for its performance of the specific Services for which the liability arises, and (y) under no circumstances shall Service Provider be liable for consequential, incidental, punitive, exemplary or indirect damages, lost profits or other business interruption damages, by statute, in tort or contract, under any indemnity provision or otherwise (it being the intent of the parties that the indemnification obligations in this Agreement shall cover only actual damages and accordingly, without limitation of the foregoing, shall be net of any insurance proceeds actually received in respect of any such damages).

(b) Indemnification In Respect of Services Provided by Any Nonutility Company.

(i) In circumstances where a Nonutility Company is a Service Provider (*i.e.*, where Operating Company is the Client Company): (x) subject to subparagraph (ii) of this Section 4.4(b),

Service Provider shall release, defend, indemnify and hold harmless the Client Company, including any officer, director, employee or agent thereof, from and against, and shall pay the full amount of, any Damages incurred or sustained by or against Client Company arising, directly or indirectly, from or in connection with Service Provider's negligence or willful misconduct in the performance of the Services.

(ii) Notwithstanding any other provision hereof, in circumstances where a Nonutility Company is a Service Provider (*i.e.*, where Operating Company is the Client Company), under no circumstances shall Service Provider be liable for consequential, incidental, punitive, exemplary or indirect damages, lost profits or other business interruption damages, by statute, in tort or contract, under any indemnity provision or otherwise (it being the intent of the parties that the indemnification obligations in this Agreement shall cover only actual damages and accordingly, without limitation of the foregoing, shall be net of any insurance proceeds actually received in respect of any such damages).

Section 4.5 Procedure for Indemnification. Within 15 business days after receipt by any Client Company of notice of any claim or the commencement of any action, suit, litigation or other proceeding against it (a "Proceeding") with respect to which it is eligible for indemnification hereunder, such Client Company shall notify Service Provider thereof in writing (it being understood that failure so to notify Service Provider shall not relieve the latter of its indemnification obligation, unless Service Provider establishes that defense thereof has been prejudiced by such failure). Thereafter, Service Provider shall be entitled to participate in such Proceeding and, at its election upon notice to such Client Company and at its expense, to assume the defense of such Proceeding. Without the prior written consent of such Client Company, Service Provider shall not enter into any settlement of any third-party claim that would lead to liability or create any financial or other obligation on the part of such Client Company for which it such Client Company is not entitled to indemnification hereunder. If such Client Company has given timely notice to Service Provider of the commencement of such Proceeding, but Service Provider has not, within 15 business days after receipt of such notice, given notice to Client Company of its election to assume the defense thereof, Service Provider shall be bound by any determination made in such Proceeding or any compromise or settlement made by Client Company. A claim for indemnification for any matter not involving a third-party claim may be asserted by notice from the applicable Client Company to Service Provider.

ARTICLE 5. MISCELLANEOUS

Section 5.1 Amendments. Any amendments to this Agreement shall be in writing executed by each of the parties hereto. To the extent that applicable state law or regulation or other binding obligation requires that any such amendment be filed with the Kentucky Public Service Commission for its review or otherwise, Operating Company shall comply in all respects with any such requirements.

Section 5.2 Effective Date; Term. This Agreement shall become effective on the Effective Date and shall continue in full force and effect as to each party until terminated by any party, as to itself only, upon not less than 30 days prior written notice to the other parties hereto. Any such

Any such termination of parties shall not be deemed an amendment hereto. This Agreement may be terminated and thereafter be of no further force and effect upon the mutual consent of all of the parties hereto.

Section 5.3 Additional Parties. After the effective date of this Agreement, additional Nonutility Companies may become parties to this Agreement by executing appropriate signature pages, whereupon any such additional signatory shall be deemed a "party" hereto all purposes hereof and shall thereupon become bound by the terms and conditions of this Agreement as if an original party hereto. The addition of any such further signatories, in the absence of any changes to the terms of this Agreement, shall not be deemed an amendment hereto.

Section 5.4 Entire Agreement. This Agreement contains the entire agreement between the parties hereto with respect to the subject matter hereof and supersedes any prior or contemporaneous contracts, agreements, understandings or arrangements, whether written or oral, with respect thereto (including that certain Services Agreement between Operating Company and certain nonutility subsidiaries of Duke Energy dated April 3, 2006). Any oral or written statements, representations, promises, negotiations or agreements, whether prior hereto or concurrently herewith, are superseded by and merged into this Agreement.

Section 5.5 Severability. If any provision of this Agreement or any application thereof shall be determined to be invalid or unenforceable, the remainder of this Agreement and any other application thereof shall not be affected thereby.

Section 5.6 Assignment. Neither this Agreement nor any of the rights, interests or obligations hereunder shall be assigned, in whole or in part, by operation of law or otherwise by any of the parties hereto without the prior written consent of each of the other parties. Any attempted or purported assignment in violation of the preceding sentence shall be null and void and of no effect whatsoever. Subject to the preceding two sentences, this Agreement shall be binding upon, inure to the benefit of, and be enforceable by, the parties and their respective successors and assigns.

Section 5.7 Governing Law. This Agreement shall be construed and enforced under and in accordance with the laws of the State of Kentucky, without regard to conflicts of laws principles.

Section 5.8 Captions, etc. The captions and headings used in this Agreement are for convenience of reference only and shall not affect the construction to be accorded any of the provisions hereof. As used in this Agreement, "hereof," "hereunder," "herein," "hereto," and words of like import refer to this Agreement as a whole and not to any particular section or other paragraph or subparagraph thereof.

Section 5.9 Counterparts. This Agreement may be executed in one or more counterparts, each of which shall be deemed a duplicate original hereof, but all of which shall be deemed one and the same Agreement.

[REMAINDER OF PAGE INTENTIONALLY LEFT BLANK]

IN WITNESS WHEREOF, each of the parties hereto has caused this Agreement to be executed on its behalf by an appropriate officer thereunto duly authorized.

DUKE ENERGY KENTUCKY, INC.

By:_____
Richard G. Beach
Assistant Secretary

CINERGY CORP.

By:_____
Richard G. Beach
Assistant Secretary

CINERGY INVESTMENTS, INC.

By:_____
George Dwight, II
Assistant Secretary

KO TRANSMISSION COMPANY

By:_____
Richard G. Beach
Assistant Secretary

TRI-STATE IMPROVEMENT COMPANY

By:_____
Richard G. Beach
Assistant Secretary

SOUTH CONSTRUCTION COMPANY, INC.

By:_____
Richard G. Beach
Assistant Secretary

IN WITNESS WHEREOF, each of the parties hereto has caused this Agreement to be executed on its behalf by an appropriate officer thereunto duly authorized.

DUKE ENERGY KENTUCKY, INC.

By:_____
Richard G. Beach
Assistant Secretary

CINERGY CORP.

By:_____
Richard G. Beach
Assistant Secretary

CINERGY INVESTMENTS, INC.

By:_____
George Dwight, II
Assistant Secretary

KO TRANSMISSION COMPANY

By:_____
Richard G. Beach
Assistant Secretary

TRI-STATE IMPROVEMENT COMPANY

By:_____
Richard G. Beach
Assistant Secretary

SOUTH CONSTRUCTION COMPANY, INC.

By:_____
Richard G. Beach
Assistant Secretary

CINPOWER I, LLC

By:_____
Richard G. Beach
Assistant Secretary

DUKE ENERGY ENGINEERING, INC.

By:_____
George Dwight, II
Assistant Secretary

DUKE ENERGY GENERATION SERVICES
HOLDING COMPANY, INC.

By:_____
George Dwight, II
Assistant Secretary

SUEZ-DEGS, LLC

By:_____
David A. Ledonne
Vice President

SUEZ-DEGS OF ORLANDO, LLC

By:_____
George Dwight, II
Assistant Secretary

DUKE-RELIANT RESOURCES, INC.

By:_____
Richard G. Beach
Assistant Secretary

CINPOWER I, LLC

By:_____
Richard G. Beach
Assistant Secretary

DUKE ENERGY ENGINEERING, INC.

By:_____
George Dwight, II
Assistant Secretary

DUKE ENERGY GENERATION SERVICES HOLDING COMPANY, INC.

By:_____
George Dwight, II
Assistant Secretary

SUEZ-DEGS, LLC

By:_____
David A. Ledonne
Vice President

SUEZ-DEGS OF ORLANDO, LLC

By:_____
George Dwight, II
Assistant Secretary

DUKE-RELIANT RESOURCES, INC.

By:_____
Richard G. Beach
Assistant Secretary

CINPOWER I, LLC

By:_____
Richard G. Beach
Assistant Secretary

DUKE ENERGY ENGINEERING, INC.

By:_____
George Dwight, II
Assistant Secretary

DUKE ENERGY GENERATION SERVICES
HOLDING COMPANY, INC.

By:_____
George Dwight, II
Assistant Secretary

SUEZ-DEGS, LLC

By:_____
David A. Ledonne
Vice President

SUEZ-DEGS OF ORLANDO, LLC

By:_____
George Dwight, II
Assistant Secretary

DUKE-RELIANT RESOURCES, INC.

By:_____
Richard G. Beach
Assistant Secretary

RELIANT SERVICES, LLC

By: R. G. Beach
Richard G. Beach
Assistant Secretary

CINERGY TECHNOLOGY, INC.

By: R. G. Beach
Richard G. Beach
Assistant Secretary

DEGS OF TUSCOLA, INC.

By:_____
George Dwight, II
Assistant Secretary

ENERGY EQUIPMENT LEASING LLC

By:_____
George Dwight, II
Assistant Secretary

DEGS OF BOCA RATON, LLC

By:_____
George Dwight, II
Assistant Secretary

DEGS OF CINCINNATI, LLC

By:_____
George Dwight, II
Assistant Secretary

RELIANT SERVICES, LLC

By:_____
Richard G. Beach
Assistant Secretary

CINERGY TECHNOLOGY, INC.

By:_____
Richard G. Beach
Assistant Secretary

DEGS OF TUSCOLA, INC.

By:_____
George Dwight, II
Assistant Secretary

ENERGY EQUIPMENT LEASING LLC

By:_____
George Dwight, II
Assistant Secretary

DEGS OF BOCA RATON, LLC

By:_____
George Dwight, II
Assistant Secretary

DEGS OF CINCINNATI, LLC

By:_____
George Dwight, II
Assistant Secretary

DEGS OF ST. PAUL, LLC

By:_____
George Dwight, II
Assistant Secretary

SUEZ-DEGS OF TUSCOLA, LLC

By:_____
George Dwight, II
Assistant Secretary

DEGS BIOGAS, INC.

By:_____
George Dwight, II
Assistant Secretary

DEGS GASCO, LLC

By:_____
George Dwight, II
Assistant Secretary

DUKE ENERGY ONE, INC.

By:_____
Richard G. Beach
Assistant Secretary

CINERGY POWER GENERATION SERVICES, LLC

By:_____
Joseph E. Lentz, Jr.
Vice President

DEGS OF ST. PAUL, LLC

By:_____
George Dwight, II
Assistant Secretary

SUEZ-DEGS OF TUSCOLA, LLC

By:_____
George Dwight, II
Assistant Secretary

DEGS BIOGAS, INC.

By:_____
George Dwight, II
Assistant Secretary

DEGS GASCO, LLC

By:_____
George Dwight, II
Assistant Secretary

DUKE ENERGY ONE, INC.

By:_____
Richard G. Beach
Assistant Secretary

CINERGY POWER GENERATION SERVICES, LLC

By:_____
Joseph E. Lentz, Jr.
Vice President

DEGS OF ST. PAUL, LLC

By:_____
George Dwight, II
Assistant Secretary

SUEZ-DEGS OF TUSCOLA, LLC

By:_____
George Dwight, II
Assistant Secretary

DEGS BIOGAS, INC.

By:_____
George Dwight, II
Assistant Secretary

DEGS GASCO, LLC

By:_____
George Dwight, II
Assistant Secretary

DUKE ENERGY ONE, INC.

By:_____
Richard G. Beach
Assistant Secretary

CINERGY POWER GENERATION SERVICES, LLC

By:_____
Joseph E. Lentz, Jr.
Vice President

DUKE ENERGY GENERATION SERVICES, INC.

By:_____
George Dwight, II
Assistant Secretary

DUKE TECHNOLOGIES, INC.

By:_____
Richard G. Beach
Assistant Secretary

DUKE VENTURES II, LLC

By:_____
Richard G. Beach
Assistant Secretary

CINERGY WHOLESALE ENERGY, INC.

By:_____
Joseph E. Lentz, Jr.
Vice President

DUKETEC, LLC

By:_____
Richard G. Beach
Assistant Secretary

DUKETEC I, LLC

By:_____
Richard G. Beach
Assistant Secretary

DUKE ENERGY GENERATION SERVICES, INC.

By:_____
George Dwight, II
Assistant Secretary

DUKE TECHNOLOGIES, INC.

By:_____
Richard G. Beach
Assistant Secretary

DUKE VENTURES II, LLC

By:_____
Richard G. Beach
Assistant Secretary

CINERGY WHOLESALE ENERGY, INC.

By:_____
Joseph E. Lentz, Jr.
Vice President

DUKETEC, LLC

By:_____
Richard G. Beach
Assistant Secretary

DUKETEC I, LLC

By:_____
Richard G. Beach
Assistant Secretary

DUKE ENERGY GENERATION SERVICES, INC.

By:_____
George Dwight, II
Assistant Secretary

DUKE TECHNOLOGIES, INC.

By:_____
Richard G. Beach
Assistant Secretary

DUKE VENTURES II, LLC

By:_____
Richard G. Beach
Assistant Secretary

CINERGY WHOLESALE ENERGY, INC.

By:_____
Joseph E. Lentz, Jr.
Vice President

DUKETEC, LLC

By:_____
Richard G. Beach
Assistant Secretary

DUKETEC I, LLC

By:_____
Richard G. Beach
Assistant Secretary

EVENT RESOURCES I LLC

By:_____
Richard G. Beach
Assistant Secretary

LANSING GRAND RIVER UTILITIES, LLC

By:_____
George Dwight, II
Assistant Secretary

OKLAHOMA ARCADIAN UTILITIES, LLC

By:_____
George Dwight, II
Assistant Secretary

SHREVEPORT RED RIVER UTILITIES, LLC

By:_____
George Dwight, II
Assistant Secretary

SYNCAP II, LLC

By:_____
George Dwight, II
Assistant Secretary

SUEZ/VWNA/DEGS OF LANSING, LLC

By:_____
George Dwight, II
Assistant Secretary

EVENT RESOURCES I LLC

By:_____
Richard G. Beach
Assistant Secretary

LANSING GRAND RIVER UTILITIES, LLC

By:_____
George Dwight, II
Assistant Secretary

OKLAHOMA ARCADIAN UTILITIES, LLC

By:_____
George Dwight, II
Assistant Secretary

SHREVEPORT RED RIVER UTILITIES, LLC

By:_____
George Dwight, II
Assistant Secretary

SYNCAP II, LLC

By:_____
George Dwight, II
Assistant Secretary

SUEZ/VWNA/DEGS OF LANSING, LLC

By:_____
George Dwight, II
Assistant Secretary

BSPE, L.P.

By:_____
Wouter T. van Kempen
Authorized Representative

BSPE GENERAL, LLC

By:_____
Wouter T. van Kempen
Authorized Representative

BSPE HOLDINGS, LLC

By:_____
Wouter T. van Kempen
Authorized Representative

BSPE LIMITED, LLC

By:_____
Wouter T. van Kempen
Authorized Representative

CSGP OF SOUTHEAST TEXAS, LLC

By:_____
George Dwight, II
Assistant Secretary

OWINGS MILLS ENERGY EQUIPMENT LEASING LLC

By:_____
George Dwight, II
Assistant Secretary

BSPE, L.P.

By:_____
Wouter T. van Kempen
Authorized Representative

BSPE GENERAL, LLC

By:_____
Wouter T. van Kempen
Authorized Representative

BSPE HOLDINGS, LLC

By:_____
Wouter T. van Kempen
Authorized Representative

BSPE LIMITED, LLC

By:_____
Wouter T. van Kempen
Authorized Representative

CSGP OF SOUTHEAST TEXAS, LLC

By:_____
George Dwight, II
Assistant Secretary

OWINGS MILLS ENERGY EQUIPMENT LEASING LLC

By:_____
George Dwight, II
Assistant Secretary

SUEZ-DEGS OF OWINGS MILLS, LLC

By:_____
George Dwight, II
Assistant Secretary

CST LIMITED, LLC

By:_____
George Dwight, II
Assistant Secretary

CST GENERAL, LLC

By:_____
George Dwight, II
Assistant Secretary

CSGP LIMITED, LLC

By:_____
George Dwight, II
Assistant Secretary

CSGP SERVICES, L.P.
(by CSGP General, LLC its General Partner)

By:_____
George Dwight, II
Assistant Secretary

CSGP GENERAL, LLC

By:_____
George Dwight, II
Assistant Secretary

CINERGY GLOBAL TRADING LIMITED

By:_____
Julia S. Janson
Secretary

CINERGY ORIGINATION & TRADE, LLC

By:_____
Richard G. Beach
Assistant Secretary

DEGS OF PHILADELPHIA, LLC

By:_____
George Dwight, II
Assistant Secretary

OHIO RIVER VALLEY PROPANE, LLC

By:_____
Julia S. Janson
Secretary

CINERGY RETAIL POWER LIMITED, INC.

By:_____
Richard G. Beach
Assistant Secretary

CINERGY RETAIL POWER GENERAL, INC.

By:_____
Joseph E. Lentz, Jr.
Vice President

CINERGY GLOBAL TRADING LIMITED

By:_____
Julia S. Janson
Secretary

CINERGY ORIGINATION & TRADE, LLC

By:_____
Richard G. Beach
Assistant Secretary

DEGS OF PHILADELPHIA, LLC

By:_____
George Dwight, II
Assistant Secretary

OHIO RIVER VALLEY PROPANE, LLC

By:_____
Julia S. Janson
Secretary

CINERGY RETAIL POWER LIMITED, INC.

By:_____
Richard G. Beach
Assistant Secretary

CINERGY RETAIL POWER GENERAL, INC.

By:_____
Joseph E. Lentz, Jr.
Vice President

CINERGY GLOBAL TRADING LIMITED

By:_____
Julia S. Janson
Secretary

CINERGY ORIGINATION & TRADE, LLC

By:_____
Richard G. Beach
Assistant Secretary

DEGS OF PHILADELPHIA, LLC

By:_____
George Dwight, II
Assistant Secretary

OHIO RIVER VALLEY PROPANE, LLC

By:_____
Julia S. Janson
Secretary

CINERGY RETAIL POWER LIMITED, INC.

By:_____
Richard G. Beach
Assistant Secretary

CINERGY RETAIL POWER GENERAL, INC.

By:_____
Joseph E. Lentz, Jr.
Vice President

CINERGY GLOBAL TRADING LIMITED

By:_____
Julia S. Janson
Secretary

CINERGY ORIGINATION & TRADE, LLC

By:_____
Richard G. Beach
Assistant Secretary

DEGS OF PHILADELPHIA, LLC

By:_____
George Dwight, II
Assistant Secretary

OHIO RIVER VALLEY PROPANE, LLC

By:_____
Julia S. Janson
Secretary

CINERGY RETAIL POWER LIMITED, INC.

By:_____
Richard G. Beach
Assistant Secretary

CINERGY RETAIL POWER GENERAL, INC.

By:_____
Joseph E. Lentz, Jr.
Vice President

CINERGY RETAIL POWER, L.P.
(by Cinergy Retail Power General, Inc. its General Partner)

By:_____
Joseph E. Lentz, Jr.
Vice President

DELTA TOWNSHIP UTILITIES, LLC

By:_____
George Dwight, II
Assistant Secretary

CINERGY LIMITED HOLDINGS, LLC

By:_____
Greer E. Mendelow
Assistant Secretary

CINERGY GENERAL HOLDINGS, LLC

By:_____
Julia S. Janson
Secretary

CINERGY RECEIVABLES COMPANY LLC

By:_____
Richard G. Beach
Secretary

CINFUEL RESOURCES, INC.

By:_____
George Dwight, II
Assistant Secretary

CINERGY RETAIL POWER, L.P.
(by Cinergy Retail Power General, Inc. its General Partner)

By:_____
Joseph E. Lentz, Jr.
Vice President

DELTA TOWNSHIP UTILITIES, LLC

By:_____
George Dwight, II
Assistant Secretary

CINERGY LIMITED HOLDINGS, LLC

By:_____
Greer E. Mendelow
Assistant Secretary

CINERGY GENERAL HOLDINGS, LLC

By:_____
Julia S. Janson
Secretary

CINERGY RECEIVABLES COMPANY LLC

By:_____
Richard G. Beach
Secretary

CINFUEL RESOURCES, INC.

By:_____
George Dwight, II
Assistant Secretary

CINERGY RETAIL POWER, L.P.
(by Cinergy Retail Power General, Inc. its General Partner)

By:_____
Joseph E. Lentz, Jr.
Vice President

DELTA TOWNSHIP UTILITIES, LLC

By:_____
George Dwight, II
Assistant Secretary

CINERGY LIMITED HOLDINGS, LLC

By:_____
Greer E. Mendelow
Assistant Secretary

CINERGY GENERAL HOLDINGS, LLC

By:_____
Julia S. Janson
Secretary

CINERGY RECEIVABLES COMPANY LLC

By:_____
Richard G. Beach
Secretary

CINFUEL RESOURCES, INC.

By:_____
George Dwight, II
Assistant Secretary

CINERGY RETAIL POWER, L.P.
(by Cinergy Retail Power General, Inc. its General Partner)

By:_____
Joseph E. Lentz, Jr.
Vice President

DELTA TOWNSHIP UTILITIES, LLC

By:_____
George Dwight, II
Assistant Secretary

CINERGY LIMITED HOLDINGS, LLC

By:_____
Greer E. Mendelow
Assistant Secretary

CINERGY GENERAL HOLDINGS, LLC

By:_____
Julia S. Janson
Secretary

CINERGY RECEIVABLES COMPANY LLC

By:_____
Richard G. Beach
Secretary

CINFUEL RESOURCES, INC.

By:_____
George Dwight, II
Assistant Secretary

CINERGY RETAIL POWER, L.P.
(by Cinergy Retail Power General, Inc. its General Partner)

By:_____
Joseph E. Lentz, Jr.
Vice President

DELTA TOWNSHIP UTILITIES, LLC

By:_____
George Dwight, II
Assistant Secretary

CINERGY LIMITED HOLDINGS, LLC

By:_____
Greer E. Mendelow
Assistant Secretary

CINERGY GENERAL HOLDINGS, LLC

By:_____
Julia S. Janson
Secretary

CINERGY RECEIVABLES COMPANY LLC

By:_____
Richard G. Beach
Secretary

CINFUEL RESOURCES, INC.

By:_____
George Dwight, II
Assistant Secretary

LH1, LLC

By:_____
George Dwight, II
Assistant Secretary

OAK MOUNTAIN PRODUCTS, LLC

By:_____
George Dwight, II
Assistant Secretary

DEGS OF LANSING, LLC

By:_____
George Dwight, II
Assistant Secretary

DEGS OF SHREVEPORT, LLC

By:_____
George Dwight, II
Assistant Secretary

DEGS OF OKLAHOMA, LLC

By:_____
George Dwight, II
Assistant Secretary

DEGS OF NARROWS, LLC

By:_____
George Dwight, II
Assistant Secretary

DEGS OF ROCK HILL, LLC

By:_____
George Dwight, II
Assistant Secretary

DEGS OF ST. BERNARD, LLC

By:_____
George Dwight, II
Assistant Secretary

CINERGY CLIMATE CHANGE INVESTMENTS, LLC

By:_____
Richard G. Beach
Assistant Secretary

DEGS OF MONACA, LLC

By:_____
George Dwight, II
Assistant Secretary

DUKETEC II, LLC

By:_____
Richard G. Beach
Assistant Secretary

DEGS OF SAN DIEGO, INC.

By:_____
George Dwight, II
Assistant Secretary

DEGS OF ROCK HILL, LLC

By:_____
George Dwight, II
Assistant Secretary

DEGS OF ST. BERNARD, LLC

By:_____
George Dwight, II
Assistant Secretary

CINERGY CLIMATE CHANGE INVESTMENTS, LLC

By:_____
Richard G. Beach
Assistant Secretary

DEGS OF MONACA, LLC

By:_____
George Dwight, II
Assistant Secretary

DUKETEC II, LLC

By:_____
Richard G. Beach
Assistant Secretary

DEGS OF SAN DIEGO, INC.

By:_____
George Dwight, II
Assistant Secretary

DEGS OF SOUTH CHARLESTON, LLC

By:_____
George Dwight, II
Assistant Secretary

CINERGY SOLUTIONS – UTILITY, INC.

By:_____
Richard G. Beach
Assistant Secretary

DEGS O&M, LLC

By:_____
George Dwight, II
Assistant Secretary

DELTA TOWNSHIP UTILITIES II, LLC

By:_____
George Dwight, II
Assistant Secretary

ENVIRONMENTAL WOOD SUPPLY, LLC

By:_____
David A. Ledonne
Vice President

DEGS OF DELTA TOWNSHIP, LLC

By:_____
George Dwight, II
Assistant Secretary

DEGS OF SOUTH CHARLESTON, LLC

By:_____
George Dwight, II
Assistant Secretary

CINERGY SOLUTIONS – UTILITY, INC.

By:_____
Richard G. Beach
Assistant Secretary

DEGS O&M, LLC

By:_____
George Dwight, II
Assistant Secretary

DELTA TOWNSHIP UTILITIES II, LLC

By:_____
George Dwight, II
Assistant Secretary

ENVIRONMENTAL WOOD SUPPLY, LLC

By:_____
David A. Ledonne
Vice President

DEGS OF DELTA TOWNSHIP, LLC

By:_____
George Dwight, II
Assistant Secretary

DEGS OF SOUTH CHARLESTON, LLC

By:_____
George Dwight, II
Assistant Secretary

CINERGY SOLUTIONS – UTILITY, INC.

By:_____
Richard G. Beach
Assistant Secretary

DEGS O&M, LLC

By:_____
George Dwight, II
Assistant Secretary

DELTA TOWNSHIP UTILITIES II, LLC

By:_____
George Dwight, II
Assistant Secretary

ENVIRONMENTAL WOOD SUPPLY, LLC

By:_____
David A. Ledonne
Vice President

DEGS OF DELTA TOWNSHIP, LLC

By:_____
George Dwight, II
Assistant Secretary

DUKE BROADBAND, LLC

By: _____
Richard G. Beach
Assistant Secretary

DUKE-CADENCE, INC.

By: _____
Richard G. Beach
Assistant Secretary

CINERGY-CENTRUS, INC.

By: _____
Richard G. Beach
Assistant Secretary

CINERGY-CENTRUS COMMUNICATIONS, INC.

By: _____
Richard G. Beach
Assistant Secretary

DEGS EPCOM COLLEGE PARK, LLC

By: _____
George Dwight, II
Assistant Secretary

DUKE SUPPLY NETWORK, LLC

By: _____
Richard G. Beach
Assistant Secretary

DUKE BROADBAND, LLC

By:_____
Richard G. Beach
Assistant Secretary

DUKE-CADENCE, INC.

By:_____
Richard G. Beach
Assistant Secretary

CINERGY-CENTRUS, INC.

By:_____
Richard G. Beach
Assistant Secretary

CINERGY-CENTRUS COMMUNICATIONS, INC.

By:_____
Richard G. Beach
Assistant Secretary

DEGS EPCOM COLLEGEPARK, LLC

By:_____
George Dwight, II
Assistant Secretary

DUKE SUPPLY NETWORK, LLC

By:_____
Richard G. Beach
Assistant Secretary

CINERGY SOLUTIONS PARTNERS, LLC
(by Duke Energy Generation Services, Inc. its Managing Member)

By:_____
George Dwight, II
Assistant Secretary

DUKE COMMUNICATIONS HOLDINGS, INC.

By:_____
Richard G. Beach
Assistant Secretary

CINERGY TWO, INC.

By:_____
Richard G. Beach
Assistant Secretary

GREEN POWER G.P., LLC

By:_____
Wouter T. van Kempen
Authorized Representative

GREEN POWER HOLDINGS, LLC

By:_____
Wouter T. van Kempen
Authorized Representative

GREEN POWER LIMITED, LLC

By:_____
Wouter T. van Kempen
Authorized Representative

CINERGY SOLUTIONS PARTNERS, LLC
(by Duke Energy Generation Services, Inc. its Managing Member)

By:_____
George Dwight, II
Assistant Secretary

DUKE COMMUNICATIONS HOLDINGS, INC.

By:_____
Richard G. Beach
Assistant Secretary

CINERGY TWO, INC.

By:_____
Richard G. Beach
Assistant Secretary

GREEN POWER G.P., LLC

By:_____
Wouter T. van Kempen
Authorized Representative

GREEN POWER HOLDINGS, LLC

By:_____
Wouter T. van Kempen
Authorized Representative

GREEN POWER LIMITED, LLC

By:_____
Wouter T. van Kempen
Authorized Representative

CINERGY SOLUTIONS PARTNERS, LLC
(by Duke Energy Generation Services, Inc. its Managing Member)

By:_____
George Dwight, II
Assistant Secretary

DUKE COMMUNICATIONS HOLDINGS, INC.

By:_____
Richard G. Beach
Assistant Secretary

CINERGY TWO, INC.

By:_____
Richard G. Beach
Assistant Secretary

GREEN POWER G.P., LLC

By:_____
Wouter T. van Kempen
Authorized Representative

GREEN POWER HOLDINGS, LLC

By:_____
Wouter T. van Kempen
Authorized Representative

GREEN POWER LIMITED, LLC

By:_____
Wouter T. van Kempen
Authorized Representative

SUEZ-DEGS OF ASHTABULA, LLC

By:_____
George Dwight, II
Assistant Secretary

SUEZ-DEGS OF LANSING, LLC

By:_____
George Dwight, II
Assistant Secretary

SUEZ-DEGS OF ROCHESTER, LLC

By:_____
George Dwight, II
Assistant Secretary

SUEZ-DEGS OF SILVER GROVE, LLC

By:_____
George Dwight, II
Assistant Secretary

DUKE ENERGY CORPORATION

By:_____
Richard G. Beach
Assistant Corporate Secretary

BISON INSURANCE COMPANY LIMITED

By:_____
Edwin Keith Bone
Senior Vice President

SUEZ-DEGS OF ASHTABULA, LLC

By:_____
George Dwight, II
Assistant Secretary

SUEZ-DEGS OF LANSING, LLC

By:_____
George Dwight, II
Assistant Secretary

SUEZ-DEGS OF ROCHESTER, LLC

By:_____
George Dwight, II
Assistant Secretary

SUEZ-DEGS OF SILVER GROVE, LLC

By:_____
George Dwight, II
Assistant Secretary

DUKE ENERGY CORPORATION

By:_____
Richard G. Beach
Assistant Corporate Secretary

BISON INSURANCE COMPANY LIMITED

By:_____
George V. Brown
President and Chief Executive Officer

SUEZ-DEGS OF ASHTABULA, LLC

By:_____
George Dwight, II
Assistant Secretary

SUEZ-DEGS OF LANSING, LLC

By:_____
George Dwight, II
Assistant Secretary

SUEZ-DEGS OF ROCHESTER, LLC

By:_____
George Dwight, II
Assistant Secretary

SUEZ-DEGS OF SILVER GROVE, LLC

By:_____
George Dwight, II
Assistant Secretary

DUKE ENERGY CORPORATION

By:_____
Richard G. Beach
Assistant Corporate Secretary

BISON INSURANCE COMPANY LIMITED

By:_____
George V. Brown
President and Chief Executive Officer

DUKE ENERGY AMERICAS, LLC

By:_____
Richard G. Beach
Assistant Secretary

DUKE ENERGY GLOBAL MARKETS, INC.

By:_____
Richard G. Beach
Assistant Secretary

DUKE ENERGY ROYAL, LLC

By:_____
Richard G. Beach
Assistant Secretary

DUKE ENERGY INTERNATIONAL, LLC

By:_____
Javier Gonzalez
Assistant Secretary

DUKE ENERGY NORTH AMERICA, LLC

By:_____
Richard G. Beach
Assistant Secretary

DUKE PROJECT SERVICES, INC.

By:_____
Richard G. Beach
Assistant Secretary

DUKE ENERGY AMERICAS, LLC

By:_____
Richard G. Beach
Assistant Secretary

DUKE ENERGY GLOBAL MARKETS, INC.

By:_____
Richard G. Beach
Assistant Secretary

DUKE ENERGY ROYAL, LLC

By:_____
Richard G. Beach
Assistant Secretary

DUKE ENERGY INTERNATIONAL, LLC

By:_____
Javier Gonzalez
Assistant Secretary

DUKE ENERGY NORTH AMERICA, LLC

By:_____
Richard G. Beach
Assistant Secretary

DUKE PROJECT SERVICES, INC.

By:_____
Richard G. Beach
Assistant Secretary

DUKE VENTURES, LLC

By:_____
Richard G. Beach
Assistant Secretary

CRESCENT RESOURCES, LLC

By:_____
Kay H. Arnette
Assistant Secretary

DUKENET COMMUNICATIONS, LLC

By:_____
Richard G. Beach
Assistant Secretary

PANENERGY CORP

By:_____
Richard G. Beach
Assistant Secretary

DUKE ENERGY SERVICES, INC.

By:_____
Richard G. Beach
Assistant Secretary

DETMI MANAGEMENT, INC.

By:_____
Richard G. Beach
Assistant Secretary

DUKE ENERGY BUSINESS SERVICES LLC

By:_____
Richard G. Beach
Assistant Secretary

DUKE ENERGY MERCHANTS, LLC

By:_____
Richard G. Beach
Assistant Secretary

DUKE ENERGY RECEIVABLES FINANCE COMPANY, LLC

By:_____
Richard G. Beach
Assistant Secretary

DUKENET COMMUNICATION SERVICES, LLC

By:_____
Richard G. Beach
Assistant Secretary

Service Request Form

Please use this form for all service requests. All data fields are required.

Facilitator/Contact Information:

First Name:

Last Name:

Phone:

Email:

Service Provider: - Pull Down List to Select -

Or Other:
- Pull Down List to Select -

Service Provider Contact Information:

First Name:

Last Name:

Phone:

email Address of Service Provider Approver:

The approver should be appropriate according to the Expenditures, Divestitures & Terminations Category of the Delegation of Authority (DOA) matrix.

Description of Proposed Service and Please Provide Basis for Estimated Costs:

Client Company: - Pull Down List to Select -

Or Other:
- Pull Down List to Select -

Client Company Contact Information:

First Name:

Last Name:

Phone:

*(this e-mail address **must** be filled in properly for form to send automatically to the Client Approver)*

email Address of Client Company

The approver should be appropriate

Approver:	according to the Expenditures, Divestitures & Terminations Category of the Delegation of Authority (DOA) matrix.
Estimated Costs:	$ Format Numbers Only - do not include commas or periods
Scheduled Start Date:	MM/DD/YYYY
Scheduled Completion Date:	MM/DD/YYYY
Legal Approval Representative:	- Pull Down List to Select -

Accounting codes (FMIS / BDMS) of Duke Energy Company receiving the services:

Process / Work Code(s):	
n/a / Corp. Number:	
RCTo / Line of Business:	
RCFrom / Center:	
Project:	
Activity:	

Submit Reset

© Duke Energy Corporation

SECOND AMENDED AND RESTATED OPERATING COMPANIES SERVICE AGREEMENT

This Second Amended and Restated Operating Companies Service Agreement (this "Agreement"), dated September1, 2008 (the "Effective Date"), by and among Duke Energy Carolinas, LLC, a North Carolina limited liability company ("DE-Carolinas"), Duke Energy Ohio, Inc., , an Ohio corporation ("DE-Ohio"), Duke Energy Indiana, Inc., an Indiana corporation ("DE-Indiana"), Duke Energy Kentucky, Inc., a Kentucky corporation ("DE-Kentucky"), and Miami Power Corporation, an Indiana corporation ("Miami;" and collectively with DE-Carolinas, DE-Ohio, DE-Indiana and DE-Kentucky, the "Operating Companies" and, individually, an "Operating Company") supersedes and restates in its entirety the Amended and Restated Operating Companies Service Agreement entered into by the Operating Companies dated January 2, 2007.

W I T N E S S E T H:

WHEREAS, Duke Energy Corporation ("Duke Energy") is a Delaware corporation;

WHEREAS, each Operating Company is a subsidiary of Duke Energy and a public utility company;

WHEREAS, in the ordinary course of their businesses, Operating Companies maintain organizations of employees with technical expertise in matters affecting public utility companies and related businesses and own or acquire related equipment, facilities, properties and other resources; and

WHEREAS, subject to the terms and conditions herein set forth, and taking into consideration the parties' utility responsibilities or primary business operations, as the case may be, the parties hereto are willing, upon request from time to time, to perform such services, and in connection therewith to make available such equipment, facilities, properties and other resources, as they shall request from each other;

NOW, THEREFORE, in consideration of the premises and the mutual covenants herein contained, the parties agree as follows:

ARTICLE 1. PROVISION OF SERVICES; LOANED EMPLOYEES

Section 1.1 Provision of Services.

(a) Upon receipt by a party hereto (in such capacity, a "Service Provider") of a written request in substantially the form attached hereto as Exhibit A (a "Service Request") from another party hereto (in such capacity, a "Client Company") for the provision to such Client Company of such services as are specified therein, including if applicable use of any related equipment, facilities, properties or other resources (collectively, "Services"), the Service Provider, if in its sole discretion it has available the personnel or other resources needed to perform the Service Request without impairment of its utility responsibilities or business operations, as the case may be, shall furnish such

Services to the Client Company at such times, for such periods and in such manner as the Client Company shall have so requested and otherwise in accordance with the provisions hereof.

(b) For purposes of this Agreement, "Services" may include, but shall not be limited to, services in such areas as engineering and construction; operations and maintenance; installation services; equipment testing; generation technical support; environmental, health and safety; and procurement services.

(c) For the avoidance of doubt, affiliate transactions involving sales or other transfers of assets, goods, energy commodities (including electricity, natural gas, coal and other combustible fuels) or thermal energy products are outside the scope of this Agreement.

Section 1.2 Loaned Employees.

(a) If specifically requested in connection with the provision of Services, Service Provider shall loan one or more of its employees to such Client Company, provided that such loan shall not, in the sole discretion of Service Provider, interfere with or impair Service Provider's utility responsibilities or business operations, as the case may be. After the commencement thereof, any such loaned employees may be withdrawn by Service Provider from tasks duly assigned by Client Company, prior to completion thereof as contemplated in the associated Service Request, only with the consent of Client Company (which shall not be unreasonably withheld or delayed), except in the event of a demonstrable emergency requiring the use of any such employees in another capacity for Service Provider.

(b) While performing work on behalf of Client Company, any such loaned employees shall be under its supervision and control, and Client Company shall be responsible for their actions to the same extent as though such persons were its employees (it being understood that such persons shall nevertheless remain employees of Service Provider and nothing herein shall be construed as creating an employer-employee relationship between any Client Company and any loaned employees). Accordingly, for the duration of any such loan, Service Provider shall continue to provide its loaned employees with the same payroll, pension, savings, tax withholding, unemployment, bookkeeping and other personnel support services then being provided by Service Provider to its other employees.

ARTICLE 2. SERVICE REQUESTS

Section 2.1 Procedure. All Services (including any loans of employees) (i) shall be performed in accordance with Service Requests issued by or on behalf of Client Company and accepted by Service Provider and (ii) shall be assigned to applicable activities, processes, projects, responsibility centers or on other appropriate bases to enable specific work to be properly assigned. Service Requests shall be as specific as practicable in defining the Services requested. Client Company shall have the right from time to time to amend or rescind any Service Request, *provided* that (a) Service Provider consents to any amendment that results in a material change in the scope of Services to be provided, (b) the costs associated with an amended or rescinded Service Request shall include the costs incurred by Service Provider as a result of such amendment or rescission, and (c) no amendment or rescission of a Service Request shall release Client Company from any liability for costs already incurred or contracted for by Service Provider pursuant to the original Service Request,

regardless of whether any labor or the furnishing of any property or other resources has been commenced or completed.

ARTICLE 3. COMPENSATION FOR SERVICES

Section 3.1 Cost of Services. As compensation for any Services rendered to it pursuant to this Agreement, Client Company shall pay to Service Provider the Cost thereof, except to the extent otherwise required by Section 482 of the Internal Revenue Code; provided, however, that Services provided to or by DE-Carolinas shall be priced in accordance with DE-Carolinas's North Carolina Code of Conduct approved by the North Carolina Utilities Commission; and further provided that with respect to Services relating to wholesale merchant or electric generation functions, such Services provided by DE Carolinas, DE Indiana, or DE Kentucky to DE Ohio shall be priced at the greater of Cost or market, and such Services provided by DE Ohio to DE Carolinas, DE Indiana, or DE Kentucky shall be priced at no more than market. "Costs" means the sum of (i) direct costs, (ii) indirect costs and (iii) costs of capital. As soon as practicable after the close of each month, Service Provider shall render to each Client Company a statement reflecting the billing information necessary to identify the costs charged for that month. By the last day of each month, Client Company shall remit to Service Provider all charges billed to it. For avoidance of doubt, the Service Provider and each Client Company may satisfy the foregoing requirement by recording billings and payments required hereunder in their common accounting systems without rendering paper or electronic monthly statements or remitting cash payments.

Section 3.2 Exception. In the event any Services to be rendered under this Agreement are to be provided to or from DE-Carolinas in accordance with DE-Carolinas's North Carolina Code of Conduct at anything other than fully embedded cost as described above, then prior to entering into the transaction, DE-Indiana, DE-Kentucky or DE-Ohio, whichever is applicable, shall provide 30 days written notice to the respective state commission staffs and state consumer representatives explaining the proposed transaction, including the benefits of the transaction. If no objection is received within 30 days, then the transaction may proceed. If one or more third parties object to the transaction in writing within 30 days, then DE-Indiana, DE-Kentucky or DE-Ohio, whichever is applicable, must seek specific state commission approval of the transaction prior to entering into the transaction.

ARTICLE 4. LIMITATION OF LIABILITY; INDEMNIFICATION

Section 4.1 Limitation of Liability/Services. In performing Services pursuant to Section 1.1 hereof, Service Provider will exercise due care to assure that the Services are performed in a workmanlike manner in accordance with the specifications set forth in the applicable Service Request and consistent with any applicable legal standards. The sole and exclusive responsibility of Service Provider for any deficiency therein shall be promptly to correct or repair such deficiency or to re-perform such Services, in either case at no additional cost to Client Company, so that the Services fully conform to the standards described in the first sentence of this Section 4.1. No Service Provider makes any other warranty with respect to the provision of Services, and each Client Company agrees to accept any Services without further warranty of any nature.

Section 4.2 Limitation of Liability/Loaned Employees. In furnishing Services under Section 1.2 hereof (i.e., involving loaned employees), neither the Service Provider, nor any officer, director, employee or agent thereof, shall have any responsibility whatever to any Client Company receiving such Services, and Client Company specifically releases Service Provider and such persons, on account of any claims, liabilities, injuries, damages or other consequences arising in connection with the provision of such Services under any theory of liability, whether in contract, tort (including negligence or strict liability) or otherwise, it being understood and agreed that any such loaned employees are made available without warranty as to their suitability or expertise.

Section 4.3 Disclaimer. WITH RESPECT TO ANY SERVICES PROVIDED UNDER THIS AGREEMENT, THE SERVICE PROVIDER THEREOF MAKES NO WARRANTY OR REPRESENTATION OTHER THAN AS SET FORTH IN SECTION 4.1, AND THE PARTIES HERETO HEREBY AGREE THAT NO OTHER WARRANTY, WHETHER STATUTORY, EXPRESS OR IMPLIED (INCLUDING BUT NOT LIMITED TO ALL WARRANTIES OF MERCHANTABILITY AND FITNESS FOR A PARTICULAR PURPOSE AND WARRANTIES ARISING FROM COURSE OF DEALING OR USAGE OF TRADE), SHALL BE APPLICABLE TO THE PROVISION OF ANY SUCH SERVICES. THE PARTIES FURTHER AGREE THAT THE REMEDIES STATED HEREIN ARE EXCLUSIVE AND SHALL CONSTITUTE THE SOLE AND EXCLUSIVE REMEDY OF ANY PARTY HERETO FOR A FAILURE BY ANY OTHER PARTY HERETO TO COMPLY WITH ITS WARRANTY OBLIGATIONS.

Section 4.4 Indemnification.

(a) Subject to subparagraph (b) of this Section 4.4, Service Provider shall release, defend, indemnify and hold harmless each Client Company, including any officer, director, employee or agent thereof, from and against, and shall pay the full amount of, any loss, liability, claim, damage, expense (including costs of investigation and defense and reasonable attorneys' fees), whether or not involving a third-party claim, incurred or sustained by or against any such Client Company arising, directly or indirectly, from or in connection with Service Provider's negligence or willful misconduct in the performance of the Services.

(b) Notwithstanding any other provision hereof, Service Provider's total liability hereunder with respect to any specific Services shall be limited to the amount actually paid to Service Provider for its performance of the specific Services for which the liability arises, and under no circumstances shall Service Provider be liable for consequential, incidental, punitive, exemplary or indirect damages, lost profits or other business interruption damages, by statute, in tort or contract, under any indemnity provision or otherwise (it being the intent of the parties that the indemnification obligations in this Agreement shall cover only actual damages and accordingly, without limitation of the foregoing, shall be net of any insurance proceeds actually received in respect of any such damages).

Section 4.5 Procedure for Indemnification. Within 15 business days after receipt by any Client Company of notice of any claim or the commencement of any action, suit, litigation or other proceeding against it (a "Proceeding") with respect to which it is eligible for indemnification hereunder, such Client Company shall notify Service Provider thereof in writing (it being understood

that failure so to notify Service Provider shall not relieve the latter of its indemnification obligation, unless Service Provider establishes that defense thereof has been prejudiced by such failure). Thereafter, Service Provider shall be entitled to participate in such Proceeding and, at its election upon notice to such Client Company and at its expense, to assume the defense of such Proceeding. Without the prior written consent of such Client Company, Service Provider shall not enter into any settlement of any third-party claim that would lead to liability or create any financial or other obligation on the part of such Client Company for which it such Client Company is not entitled to indemnification hereunder. If such Client Company has given timely notice to Service Provider of the commencement of such Proceeding, but Service Provider has not, within 15 business days after receipt of such notice, given notice to Client Company of its election to assume the defense thereof, Service Provider shall be bound by any determination made in such Proceeding or any compromise or settlement made by Client Company. A claim for indemnification for any matter not involving a third-party claim may be asserted by notice from the applicable Client Company to Service Provider.

ARTICLE 5. MISCELLANEOUS

Section 5.1 Amendments. Any amendments to this Agreement shall be in writing executed by each of the parties hereto. To the extent that applicable state law or regulation or other binding obligation requires that any such amendment be filed with any affected state public utility commission for its review or otherwise, each Operating Company shall comply in all respects with any such requirements.

Section 5.2 Effective Date; Term. This Agreement shall become effective on the Effective Date and shall continue in full force and effect as to each party until terminated by any party, as to itself only, upon not less than 30 days prior written notice to the other parties hereto. Any such termination of parties shall not be deemed an amendment hereto. This Agreement may be terminated and thereafter be of no further force and effect upon the mutual consent of all of the parties hereto.

Section 5.3 Entire Agreement. This Agreement contains the entire agreement between the parties hereto with respect to the subject matter hereof and supersedes any prior or contemporaneous contracts, agreements, understandings or arrangements, whether written or oral, with respect thereto. Any oral or written statements, representations, promises, negotiations or agreements, whether prior hereto or concurrently herewith, are superseded by and merged into this Agreement.

Section 5.4 Severability. If any provision of this Agreement or any application thereof shall be determined to be invalid or unenforceable, the remainder of this Agreement and any other application thereof shall not be affected thereby.

Section 5.5 Assignment. Neither this Agreement nor any of the rights, interests or obligations hereunder shall be assigned, in whole or in part, by operation of law or otherwise by any of the parties hereto without the prior written consent of each of the other parties. Any attempted or purported assignment in violation of the preceding sentence shall be null and void and of no effect whatsoever. Subject to the preceding two sentences, this Agreement shall be binding upon, inure to the benefit of, and be enforceable by, the parties and their respective successors and assigns.

Section 5.6 Governing Law. This Agreement shall be construed and enforced under and in accordance with the laws of the State of New York, without regard to conflicts of laws principles.

Section 5.7 Captions, etc. The captions and headings used in this Agreement are for convenience of reference only and shall not affect the construction to be accorded any of the provisions hereof. As used in this Agreement, "hereof," "hereunder," "herein," "hereto," and words of like import refer to this Agreement as a whole and not to any particular section or other paragraph or subparagraph thereof.

Section 5.8 Counterparts. This Agreement may be executed in one or more counterparts, each of which shall be deemed a duplicate original hereof, but all of which shall be deemed one and the same Agreement.

Section 5.9 DE-Carolinas Conditions. In addition to the terms and conditions set forth herein, with respect to DE-Carolinas, the provisions set out in Appendix B are hereby incorporated herein by reference. In addition, except with respect to the pricing of Services as set forth herein, DE-Carolinas' participation in this Agreement is explicitly subject to the Regulatory Conditions and Code of Conduct approved by the NCUC in its Order Approving Merger Subject to Regulatory Conditions and Code of Conduct issued March 24, 2006, in Docket No. E-7, Sub 795, as such Regulatory Conditions and Code of Conduct may be amended from time to time.

IN WITNESS WHEREOF, each of the parties hereto has caused this Agreement to be executed on its behalf by an appropriate officer thereunto duly authorized.

Duke Energy Carolinas, LLC

By: _____
Richard G. Beach
Assistant Secretary

Duke Energy Ohio, Inc.

By: _____
Richard G. Beach
Assistant Secretary

Duke Energy Indiana, Inc.

By: _____
Richard G. Beach
Assistant Secretary

Duke Energy Kentucky, Inc.

By: _____
Richard G. Beach
Assistant Secretary

Miami Power Corporation

By: _____
Richard G. Beach
Assistant Secretary

Exhibit A

Folder Name efr148v1-000142
Status New

eForms

Service Request for Affiliates

* Red Asterisk indicates required fields

Service Provider

* Service Provider Selec
* Legal Approval Representative Selec

Proposed Service

* Description of Proposed Service
Please Provide Basis for Estimated Costs, include # of employees requested and amount of time requested

* Estimated Costs (Numbers only, no commas or decimals) $0
* Scheduled Start Date
* Scheduled Completio Date

Client Company

* Client Company Selec

Accounting Codes (FMIS/BDMS) of the Client Company Receiving the Service

* ** Process/Work Code(s) OR Project & Activities (FMIS only) OR GL Account must be entered

n/a / Corp Number
* Operating Unit / Line of Business
* Resp. Center / Center
* Process / Work Code(s)
* Project
* Activity
* GL Account

Confirmation of Service Provider Utility Responsibilities by Service Provider Approver

* ☐ Check this box to confirm that this Service Request will not result in impairment of Service Provider's utility responsibilities or operations.

Miscellaneous Comments

Comments

Comments Log

Exhibit A

Attachments

Help

Filename	Size

Approver Selection

The approvers should be appropriate according to the Delegation of Authority (DOA) matrix.

Route To:	Name		Phone	Status
* Client Company		Select		
* Service Provider		Select		
* Legal				

Submitter Details

Created by	Pahutski, Michael J	Created on	3/9/2008 11:09:03 AM
* Phone	(513) 419-1803		
Last Modified by		Last Modified	

Exhibit B

DE-CAROLINAS CONDITIONS

1. In connection with the North Carolina Utilities Commission ("NCUC") approval of the Merger in NCUC Docket No. E-7, Sub 795, the NCUC adopted certain Regulatory Conditions ("Regulatory Conditions") and a revised Code of Conduct governing transactions between DE-Carolinas and its affiliates ("Code of Conduct"). Pursuant to the Regulatory Conditions and Code of Conduct, the following provisions are applicable to DE-Carolinas:

(a) DE-Carolinas's participation in this Agreement is voluntary. DE-Carolinas is not obligated to take or provide services or make any purchases or sales pursuant to this Agreement, and DE-Carolinas may elect to discontinue its participation in this Agreement at its election after giving notice under Section 6.2 of the Agreement.

(b) DE-Carolinas may not make or incur a charge under this Agreement except in accordance with North Carolina law and the rules, regulations and orders of the NCUC promulgated thereunder.

(c) DE-Carolinas may not seek to reflect in rates any (i) costs incurred under this Agreement exceeding the amount allowed by the NCUC or (ii) revenue level earned under this Agreement less than the amount imputed by the NCUC; and

(d) Except to the extent that requesting FERC review and authorization pursuant to 1275(b) of Subtitle F in Title XII of PUHCA 2005, as provided in Regulatory Condition 21, may be determined to have preemptive effect under the law, DE-Carolinas will not assert in any forum that the NCUC's authority to assign, allocate, make pro-forma adjustments to or disallow revenues and costs for retail ratemaking and regulatory accounting and reporting purposes is preempted and will bear the full risk of any preemptive effects of federal law with respect to this Agreement.

2. Transfers by DE-Carolinas. With respect to the transfer by DE-Carolinas under this Agreement of the control of, operational responsibility for, or ownership of any DE-Carolinas assets used for the generation, transmission or distribution of electric power to its North Carolina retail customers with a gross book value in excess of ten million dollars, the following shall apply: (a) DE-Carolinas may not commit to or carry out the transfer except in accordance with all applicable law, and the rules, regulations and orders of the NCUC promulgated thereunder; and (b) DE-Carolinas may not include in its North Carolina cost of service or rates the value of the transfer, whether or not subject to federal law, except as allowed by the NCUC in accordance with North Carolina law.

3. Access to DE-Carolinas Information. Any Operating Company providing Services to DE-Carolinas pursuant to this Agreement, including any loaned employees under Section 1.2 of the Agreement, shall be permitted to have access to DE-Carolinas Customer Information and Confidential Systems Operation Information, as those terms are defined in the Code of Conduct, to the extent necessary for the performance of such Services; provided that such Operating Company shall take reasonable steps to protect the confidentiality of such Information.

SECOND AMENDED AND RESTATED SERVICE COMPANY UTILITY SERVICE AGREEMENT

This Second Amended and Restated Service Company Utility Service Agreement (this "Second Amended and Restated Service Agreement" or "Agreement")), dated September 1, 2008 (the "Effective Date") by and among Duke Energy Carolinas, LLC ("DE-Carolinas"), a North Carolina limited liability company, Duke Energy Ohio, Inc., an Ohio corporation ("DE-Ohio"), Duke Energy Indiana, Inc., an Indiana corporation ("DE-Indiana"), Duke Energy Kentucky, Inc., a Kentucky corporation ("DE-Kentucky"), Miami Power Corporation, an Indiana corporation ("Miami"), and Duke Energy Business Services LLC, a Delaware limited liability company, on its own behalf and as successor in interest to Duke Energy Shared Services, Inc. (the "Service Company") (DE-Carolinas, DE-Ohio, DE-Indiana, DE-Kentucky and Miami are sometimes hereinafter referred to individually as a "Client Company" and collectively as the "Client Companies"), supersedes and restates in its entirety the Amended and Restated Service Company Utility Service Agreement entered into by the parties dated January 2, 2007 (the "Amended and Restated Service Agreement").

WITNESSETH

WHEREAS, the terms of this Agreement are substantially similar to the Amended and Restated Service Agreement and the purpose of this Second Amended and Restated Service Agreement is to clarify the parties' intentions regarding the scope of services. WHEREAS, each of the Client Companies and the Service Company is a subsidiary of Duke Energy Corporation;

WHEREAS, the Service Company and the Client Companies have entered into this Agreement whereby the Service Company agrees to provide and the Client Companies agree to accept and pay for various services as provided herein at cost, except to the extent otherwise required by Section 482 of the Internal Revenue Code; and

WHEREAS, economies and efficiencies benefiting the Client Companies will result from the performance by the Service Company of services as herein provided;

NOW, THEREFORE, in consideration of the premises and the mutual agreements herein contained, the parties to this Agreement covenant and agree as follows:

ARTICLE I – SERVICES

Section 1.1 The Service Company shall furnish to the Client Companies, upon the terms and conditions hereinafter set forth, such of the services described in Appendix A hereto, at such times, for such periods and in such manner as the Client Companies may from time to time request and which the Service Company concludes it is equipped to perform. The Service Company shall also provide Client Companies with such special services, including without limitation cost management services, in addition to those services described in Appendix A hereto, as may be requested by a Client Company and which the Service Company concludes it is equipped to perform. In supplying such services, the Service Company may (i) arrange, where it deems appropriate, for the services of such experts, consultants, advisers and other persons with necessary qualifications as are required for or pertinent to the rendition of such services, and (ii) tender payments to third parties as agent for and on behalf of Client Companies, with such charges being passed through to the appropriate Client Companies.

Section 1.2 Each of the Client Companies shall take from the Service Company such of the services described in Section 1.1 and such additional general or special services, whether or not now contemplated, as are requested from time to time by the Client Companies and which the Service Company concludes it is equipped to perform.

Section 1.3 The services described herein shall be directly assigned, distributed or allocated by activity, process, project, responsibility center, work order or other appropriate basis. A Client Company shall have the right from time to time to amend, alter or rescind any activity, process, project, responsibility center or work order, provided that (i) any such amendment or alteration which results in a material change in the scope of the services to be performed or equipment to be provided is agreed to by the Service Company, (ii) the cost for the services covered by the activity, process, project, responsibility center or work order shall include any expense incurred by the Service Company as a direct result of such amendment, alteration or rescission of the activity, process, project, responsibility center or work order, and (iii) no amendment, alteration or rescission of an activity, process, project, responsibility center or work order shall release a Client Company from liability for all costs already incurred by or contracted for by the Service Company pursuant to the activity, process, project, responsibility center or work order, regardless of whether the services associated with such costs have been completed.

Section 1.4 The Service Company shall maintain a staff trained and experienced in the design, construction, operation, maintenance and management of public utility properties.

ARTICLE II - COMPENSATION

Section 2.1 Except to the extent otherwise required by Section 482 of the Internal Revenue Code, as compensation for the services to be rendered hereunder, each of the Client Companies shall pay to the Service Company all costs which reasonably can be identified and related to particular services performed by the Service Company for or on its behalf. Where more than one Client Company is involved in or has received benefits from a service performed,

costs will be directly assigned, distributed or allocated, as set forth in Appendix A hereto, between or among such companies on a basis reasonably related to the service performed to the extent reasonably practicable.

Section 2.2 The method of assignment, distribution or allocation of costs described in Appendix A shall be subject to review annually, or more frequently if appropriate. Such method of assignment, distribution or allocation of costs may be modified or changed by the Service Company without the necessity of an amendment to this Agreement, provided that in each instance, all services rendered hereunder shall be at actual cost thereof, fairly and equitably assigned, distributed or allocated, except to the extent otherwise required by Section 482 of the Internal Revenue Code. The Service Company shall promptly advise the Client Companies and the North Carolina Utilities Commission ("NCUC"), the Public Service Commission of South Carolina ("PSCSC"), the Indiana Utility Regulatory Commission ("IURC"), The Public Utilities Commission of Ohio ("PUCO"), the Kentucky Public Service Commission ("KPSC;" and together with the NCUC, the PSCSC, the IURC and the PUCO, the "Affected State Commissions") from time to time of any material changes in such method of assignment, distribution or allocation. Such notice shall be in compliance with the requirements of applicable state law, regulations and regulatory conditions.

Section 2.3 The Service Company shall render a monthly statement to each Client Company which shall reflect the billing information necessary to identify the costs charged for that month. By the last day of each month, each Client Company shall remit to the Service Company all charges billed to it. For avoidance of doubt, the Service Company and each Client Company may satisfy the foregoing requirement by recording billings and payments required hereunder in their common accounting systems without rendering paper or electronic monthly statements or remitting cash payments.

Section 2.4 Subject to Section 482 of the Internal Revenue Code, it is the intent of this Agreement that the payment for services rendered by the

Service Company to the Client Companies shall cover all the costs of its doing business (less the cost of services provided to affiliated companies not a party to this Agreement and to other non-affiliated companies, and credits for any miscellaneous income items), including, but not limited to, salaries and wages, office supplies and expenses, outside services employed, property insurance, injuries and damages, employee pensions and benefits, miscellaneous general expenses, rents, maintenance of structures and equipment, depreciation and amortization and compensation for use of capital. Without limitation of the foregoing, "cost," as used in this Agreement, means fully embedded cost, namely, the sum of (1) direct costs, (2) indirect costs and (3) costs of capital.

ARTICLE III - TERM

Section 3.1 This Agreement is entered into as of the Effective Date and shall continue in force with respect to a Client Company until terminated by the Service Company and Client Company with respect to such Client Company (provided that no such termination with respect to less than all of the Client Companies shall thereby affect the term of this Agreement or any of the provisions hereof) or until terminated by unanimous agreement of all the parties then signatory to this Agreement.

ARTICLE IV – ACCOUNTS AND RECORDS

Section 4.1 The Service Company shall utilize the Uniform System of Accounts prescribed by the Federal Energy Regulatory Commission.

Section 4.2 The Service Company shall permit each Affected State Commission and applicable statutory utility consumer representative(s), together with other interested parties as required under applicable law, access to its accounts and records, including the basis and computation of allocations, necessary for each Affected State Commission to review a Client Company's operating results.

ARTICLE V – MISCELLANEOUS

Section 5.1 Counterparts. This Agreement may be executed in one or more counterparts, all of which shall be considered one and the same agreement and shall become effective when one or more counterparts have been signed by each party and delivered to the other parties.

Section 5.2 Entire Agreement; No Third Party Beneficiaries. This Agreement (including Appendix A and any other appendices or other exhibits or schedules hereto) (i) constitutes the entire agreement, and supersedes any prior agreements and understandings, both written and oral, among the parties with respect to the subject matter of this Agreement (including without limitation the Amended and Restated Service Agreement; and (ii) is not intended to confer upon any person other than the parties hereto any rights or remedies.

Section 5.3 Governing Law. This Agreement shall be governed by, and construed in accordance with, the laws of the State of New York, regardless of the laws that might otherwise govern under applicable principles of conflict of laws.

Section 5.4 Assignment. Neither this Agreement nor any of the rights, interests or obligations hereunder shall be assigned, in whole or in part, by operation of law or otherwise by any of the parties hereto without the prior written consent of each of the other parties. Any attempted or purported assignment in violation of the preceding sentence shall be null and void and of no effect whatsoever. Subject to the preceding two sentences, this Agreement shall be binding upon, inure to the benefit of, and be enforceable by, the parties and their respective successors and assigns.

Section 5.5 Amendments. This Agreement may not be amended except by an instrument in writing signed on behalf of each of the parties. To the extent

that applicable state law or regulation or other binding obligation requires that any such amendment be filed with any Affected State Commission for its review or otherwise, each Client Company shall comply in all respects with any such requirements.

Section 5.6 Interpretation. When a reference is made in this Agreement to an Article, Section or Appendix or other Exhibit, such reference shall be to an Article or Section of, or an Appendix or other Exhibit to, this Agreement unless otherwise indicated. The headings contained in this Agreement are for convenience of reference only and shall not affect in any way the meaning or interpretation of this Agreement. Whenever the words "include", "includes" or "including" are used in this Agreement, they shall be deemed to be followed by the words "without limitation". The words "hereof", "herein" and "hereunder" and words of similar import when used in this Agreement shall refer to this Agreement as a whole and not to any particular provision of this Agreement. The definitions contained in this Agreement are applicable to the singular as well as the plural forms of such terms and to the masculine as well as to the feminine and neuter genders of such term. References to a person are also to its permitted successors and assigns.

Section 5.7 DE-Carolinas Conditions. In addition to the terms and conditions set forth herein, with respect to DE-Carolinas, the provisions set out in Appendix B are hereby incorporated herein by reference. In addition, DE-Carolinas' participation in this Agreement is explicitly subject to the Regulatory Conditions and Code of Conduct approved by the NCUC in its Order Approving Merger Subject to Regulatory Conditions and Code of Conduct issued March 24, 2006, in NCUC Docket No. E-7, Sub 795. In the event of any conflict between the provisions of this Agreement and the approved Regulatory Conditions and Code of Conduct provisions, the Regulatory Conditions and Code of Conduct shall govern.

[REMAINDER OF PAGE INTENTIONALLY LEFT BLANK]

IN WITNESS WHEREOF, the parties hereto have caused this Second Amended and Restated Service Agreement to be executed as of the date and year first above written.

DUKE ENERGY BUSINESS SERVICES LLC

By: _____
Richard G. Beach
Assistant Secretary

DUKE ENERGY CAROLINAS, LLC

By: _____
Richard G. Beach
Assistant Secretary

DUKE ENERGY OHIO, INC.

By: _____
Richard G. Beach
Assistant Secretary

DUKE ENERGY INDIANA, INC.

By: _____
Richard G. Beach
Assistant Secretary

DUKE ENERGY KENTUCKY, INC.

By: _____
Richard G. Beach
Assistant Secretary

MIAMI POWER CORPORATION

By _____
Richard G. Beach
Assistant Secretary

APPENDIX A

Description of Services and Determination
of Charges for Services

I. The Service Company will maintain an accounting system for accumulating all costs on an activity, process, project, responsibility center, work order, or other appropriate basis. To the extent practicable, time records of hours worked by Service Company employees will be kept by activity, process, project, responsibility center or work order. Charges for salaries will be determined from such time records and will be computed on the basis of employees' labor costs, including the cost of fringe benefits, indirect labor costs and payroll taxes. Records of employee-related expenses and other indirect costs will be maintained for each functional group within the Service Company (hereinafter referred to as "Function"). Where identifiable to a particular activity, process, project, responsibility center or work order, such indirect costs will be directly assigned to such activity, process, project, responsibility center or work order. Where not identifiable to a particular activity, process, project, responsibility center or work order, such indirect costs within a Function will be distributed in relationship to the directly assigned costs of the Function. For purposes of this Appendix A, any costs not directly assigned or distributed by the Service Company will be allocated monthly.

II. Service Company costs accumulated for each activity, process, project, responsibility center or work order will be directly assigned, distributed, or allocated to the Client Companies or other Functions within the Service Company as follows:

1. Costs accumulated in an activity, process, project, responsibility center or work order for services specifically performed for a single Client Company or Function will be directly assigned and charged to such Client Company or Function.

2. Costs accumulated in an activity, process, project, responsibility center or work order for services specifically performed for two or more Client Companies or Functions will be distributed among and charged to such Client Companies or Functions. The appropriate method of distribution will be determined by the Service Company on a case-by-case basis consistent with the nature of the work performed and will be based on the application of one or more of the methods described in paragraphs IV and V of this

Appendix A. The distribution method will be provided to each such affected Client Company or Function.

3. Costs accumulated in an activity, process, project, responsibility center or work order for services of a general nature which are applicable to all Client Companies or Functions or to a class or classes of Client Companies or Functions will be allocated among and charged to such Client Companies or Functions by application of one or more of the methods described in paragraphs IV and V of this Appendix A.

III. For purposes of this Appendix A, the following definitions or methodologies shall be utilized:

1. Where applicable, the following will be utilized to convert gas sales to equivalent electric sales: 1 cubic foot of gas sales equals 0.303048 kilowatt-hour of electric sales (based on electricity at 3412 Btu/kWh and natural gas at 1034 Btu/cubic foot).

2. "Domestic utility" refers to a utility which operates in the contiguous United States of America.

3. "Gross margin" refers to revenues as defined by Generally Accepted Accounting Principles, less cost of sales, including but not limited to fuel, purchased power, emission allowances and other cost of sales.

4. "Distribution" means electric distribution and local gas distribution as applicable.

5. "Distribution Lines" mean electric power lines at distribution voltages measured in circuit miles, and gas mains and lines, as applicable.

The weights utilized in the weighted average ratios in paragraph V of this Appendix A shall represent the percentage relationship of the activities associated with the function for which costs are to be allocated. For example, if an expense item is to be allocated on the weighted average of the Gross Margin Ratio, the Labor Dollars Ratio and the Total Property, Plant and Equipment ("PP&E") Ratio, and the activity to be allocated is one-third gross margin related, one-third labor related and one-third PP&E related, 33 percent of the Gross Margin Ratio would be utilized, 33 percent of the Labor Dollars Ratio and 34 percent of the PP&E Ratio would be utilized. To illustrate this application, assuming that

the Gross Margin Ratio were 53.75 percent for Company A and 46.25 percent for Company B, the Labor Dollars Ratio were 25 percent for Company A and 75 percent for Company B, and the Total PP&E Ratio were 60 percent for Company A and 40 percent for Company B, the following weighted average ratio would be computed:

		Company A		Company B	
Activity	Weight	Ratio	Weighted	Ratio	Weighted
Gross Margin Ratio	33%	53.75%	17.74%	46.25%	15.26%
Labor Dollars Ratio	33%	25.00%	8.25%	75.00%	24.75%
Total Property, Plant and Equipment Ratio	34%	60.00%	20.40%	40.00%	13.60%
	100%		46.39%		53.61%

IV. The following allocation methods will be applied, as specified in paragraph V of this Appendix A, to assign costs for services applicable to two or more clients and/or to allocate costs for services of a general nature.

1. Sales Ratio

   A ratio, based on the applicable domestic firm kilowatt-hour electric sales (and/or the equivalent cubic feet of gas sales, where applicable), excluding intra-system sales, for a preceding twelve consecutive calendar month period, the numerator of which is for a Client Company and the denominator of which is for all utility Client Companies (and Duke Energy Corporation's non-utility and non-domestic utility affiliates, where applicable), This ratio will be determined annually, or at such time as may be required due to a significant change.

2. Electric Peak Load Ratio

   A ratio, based on the sum of the applicable monthly domestic firm electric maximum system demands for a preceding twelve consecutive calendar month period, the numerator of which is for a Client Company and the denominator of which is for all utility Client Companies (and Duke Energy Corporation's non-utility and non-domestic utility affiliates, where

applicable). This ratio will be determined annually, or at such time as may be required due to a significant change.

3. Number of Customers Ratio

A ratio, based on the sum of the applicable domestic firm electric customers (and/or gas customers, where applicable) at the end of a recent month in the preceding twelve consecutive calendar month period, the numerator of which is for a Client Company and the denominator of which is for all domestic utility Client Companies (and Duke Energy Corporation's non-utility and non-domestic utility affiliates, where applicable). This ratio will be determined annually, or at such time as may be required due to a significant change.

4. Number of Employees Ratio

A ratio, based on the applicable number of employees at the end of a recent month in the preceding twelve consecutive month period, the numerator of which is for a Client Company or Service Company Function and the denominator of which is for all Client Companies (and Duke Energy Corporation's non-utility and non-domestic utility affiliates, where applicable) and/or the Service Company. This ratio will be determined annually, or at such time as may be required due to a significant change.

5. Construction-Expenditures Ratio

A ratio, based on the applicable projected construction expenditures for the following twelve consecutive calendar month period, the numerator of which is for a Client Company and the denominator of which is for all Client Companies (and Duke Energy Corporation's non-utility and non-domestic utility affiliates, where applicable). Separate ratios will be computed for total construction expenditures and appropriate functional plant (i.e., production, transmission, Distribution, and general) classifications. This ratio will be

determined annually, or at such time as may be required due to a significant change.

6. Miles of Distribution Lines Ratio

In the case of electric Distribution, a ratio, based on the applicable installed circuit miles of domestic electric Distribution Lines, and in the case of gas Distribution, a ratio, based on the applicable installed miles of domestic gas Distribution Lines, in either case at the end of the preceding calendar year, the numerator of which is for a Client Company and the denominator of which is for all domestic utility Client Companies. This ratio will be determined annually, or at such time as may be required due to a significant change.

7. Circuit Miles of Electric Transmission Lines Ratio

A ratio, based on the applicable installed circuit miles of domestic electric transmission lines at the end of the preceding calendar year; the numerator of which is for a Client Company and the denominator of which is for all domestic utility Client Companies. This ratio will be determined annually, or at such time as may be required due to a significant change.

8. Number of Central Processing Unit Seconds Ratio

A ratio, based on the sum of the applicable number of central processing unit seconds expended to execute mainframe computer software applications for a preceding twelve consecutive calendar month period, the numerator of which is for a Client Company or Service Company Function, and the denominator of which is for all Client Companies, (and Duke Energy Corporation's non-utility and non-domestic utility affiliates, where applicable) and/or the Service Company. This ratio will be determined annually, or at such time as may be required due to a significant change.

9. Revenues Ratio

A ratio, based on the total applicable revenues for a preceding twelve consecutive calendar month period, the numerator of which is for a Client Company and the denominator of which is for all Client Companies (and Duke Energy Corporation's non-utility and non-domestic utility affiliates, where applicable). This ratio will be determined annually or at such time as may be required due to a significant change.

10. Inventory Ratio

A ratio, based on the total applicable inventory balance for the preceding year, the numerator of which is for a Client Company and the denominator of which is for all Client Companies (and Duke Energy Corporation's non-utility and non-domestic utility affiliates, where applicable). Separate ratios will be computed for total inventory and the appropriate functional plant (i.e., production, transmission, Distribution, and general) classifications. This ratio will be determined annually or at such time as may be required due to a significant change.

11. Procurement Spending Ratio

A ratio, based on the total amount of applicable procurement spending for the preceding year, the numerator of which is for a Client Company or Service Company Function and the denominator of which is for all Client Companies (and Duke Energy Corporation's non-utility and non-domestic utility affiliates, where applicable) and/or the Service Company. Separate ratios will be computed for total procurement spending and appropriate functional plant (i.e., production, transmission, Distribution, and general) classifications. This ratio will be determined annually or at such time as may be required due to a significant change.

12. Square Footage Ratio

A ratio, based on the total amount of applicable square footage occupied in a recent month in the preceding twelve consecutive month period, the numerator of which is for a Client Company or Service Company Function

and the denominator of which is for all Client Companies (and Duke Energy Corporation's non-utility and non-domestic utility affiliates, where applicable) and/or the Service Company. This ratio will be determined annually or at such time as may be required due to a significant change.

13. Gross Margin Ratio

A ratio, based on the total applicable gross margin for a preceding twelve consecutive calendar month period, the numerator of which is for a Client Company and the denominator of which is for all Client Companies (and Duke Energy Corporation's non-utility and non-domestic utility affiliates, where applicable). This ratio will be determined annually or at such time as may be required due to a significant change.

14. Labor Dollars Ratio

A ratio, based on the total applicable labor dollars for a preceding twelve consecutive calendar month period, the numerator of which is for a Client Company or Service Company Function and the denominator of which is for all Client Companies (and Duke Energy Corporation's non-utility and non-domestic utility affiliates, where applicable) and/or the Service Company. This ratio will be determined annually or at such time as may be required due to a significant change.

15. Number of Personal Computer Work Stations Ratio

A ratio, based on the total number of applicable personal computer work stations at the end of a recent month in the preceding twelve consecutive month period, the numerator of which is for a Client Company or Service Company Function and the denominator of which is for all Client Companies (and Duke Energy Corporation's non-utility and non-domestic utility affiliates, where applicable) and/or the Service Company. This ratio will be determined annually or at such time as may be required due to a significant change.

16. Number of Information Systems Servers Ratio

A ratio, based on the total number of applicable servers at the end of a recent month in the preceding twelve consecutive month period, the numerator of which is for a Client Company or Service Company Function and the denominator of which is for all Client Companies (and Duke Energy Corporation's non-utility and non-domestic utility affiliates, where applicable) and/or the Service Company. This ratio will be determined annually or at such time as may be required due to a significant change.

17. Total Property, Plant and Equipment Ratio

A ratio, based on the total applicable Property, Plant and Equipment balance (net of accumulated depreciation and amortization) for the preceding year, the numerator of which is for a Client Company and the denominator of which is for all Client Companies (and Duke Energy Corporation's non-utility and non-domestic utility affiliates, where applicable). This ratio will be determined annually or at such time as may be required due to a significant change.

18. Generating Unit MW Capability Ratio

A ratio, based on the total applicable installed megawatt capability for the preceding year, the numerator of which is for a Client Company and the denominator of which is for all Client Companies (and Duke Energy Corporation's non-utility and non-domestic utility affiliates, where applicable). This ratio will be determined annually or at such time as may be required due to a significant change.

19. Number of Meters Ratio

A ratio, based on the number of electric and/or gas meters, as applicable, the numerator of which is for a Client Company and the denominator of which is for all domestic utility Client Companies. Separate ratios will be computed for appropriate meter classifications (e.g., type of metering

technology). This ratio will be determined annually, or at such time as may be required due to a significant change.

20. O&M Expenditures Ratio

A ratio, based on the operation and maintenance (O&M) expenditures for a prior twelve month period, the numerator of which is for a Client Company and the denominator of which is for all Client Companies (and Duke Energy Corporation's non-utility and non-domestic utility affiliates, where applicable). Separate ratios will be computed for total O&M expenditures and appropriate functional plant (i.e., production, transmission, Distribution, and general) classifications. This ratio will be determined annually.

V. A description of each Function's activities, which may be modified from time to time by the Service Company, is set forth below in paragraph "a" under each Function. As described in paragraph II, "1" and "2" of this Appendix A, where identifiable, costs will be directly assigned or distributed to Client Companies or to other Functions of the Service Company. For costs accumulated in activities, processes, projects, responsibility centers, or work orders which are for services of a general nature that cannot be directly assigned or distributed, as described in paragraph II, "3" of this Appendix A, the method or methods of allocation are set forth below in paragraph "b" under each Function. For any of the functions set forth below other than Information Systems, Transportation, Human Resources or Facilities, costs of a general nature to be allocated pursuant to this Agreement shall exclude costs of a general nature which have been allocated to affiliated companies not a party to this Agreement. Substitution or changes may be made in the methods of allocation hereinafter specified, as may be appropriate, and will be provided to state regulatory agencies and to each Client Company. Any such substitution or changes shall be in compliance with the requirements of applicable state law, regulations and regulatory conditions.

1. Information Systems

a. Description of Function

Provides communications and electronic data processing services. The activities of the Function include:

(1) Development and support of mainframe computer software applications.

(2) Procurement and support of personal computers and related network and software applications.

(3) Development and support of distributed computer software applications (e.g., servers).

(4) Installation and operation of communications systems.

(5) Information systems management and support services.

b. Method of Allocation

(1) Development and support of mainframe computer software applications - allocated between the Client Companies and other Functions of the Service Company based on the number of Central Processing Unit Seconds Ratio, or allocated among the Client Companies on a weighted average of the Gross Margin Ratio, the Labor Dollar Ratio and the PP&E Ratio as appropriate.

(2) Procurement and support of personal computers and related network and software applications - allocated to the Client Companies and to other Functions of the Service Company based on the Number of Personal Computer Work Stations Ratio.

(3) Development and support of distributed computer software applications - allocated to the Client Companies and to other Functions of the Service Company based on the Number of Information Systems Servers Ratio.

(4) Installation and operation of communications systems - allocated to the Client Companies and to other Functions of the Service Company based on the Number of Employees Ratio.

(5) Information systems management and support services – allocated to the Client Companies and to other Functions of the Service Company based

on a weighted average of the Gross Margin Ratio, the Labor Dollar Ratio and the PP&E Ratio.

2. Meters

a. Description of Function

Procures, tests and maintains meters.

b. Method of Allocation

Allocated to the Client Companies based on the Number of Customers Ratio.

3. Transportation

a. Description of Function

(1) Procures and maintains vehicles and equipment.

(2) Procures and maintains aircraft and equipment.

b. Method of Allocation

(1) The costs of maintaining vehicles and equipment are allocated to the Client Companies and to other Functions of the Service Company based on the Number of Employees Ratio.

(2) The costs of maintaining aircraft and equipment are allocated to the Client Companies and to other Functions of the Service Company based on a weighted average of the Gross Margin Ratio, the Labor Dollars Ratio and the PP&E Ratio.

4. System Maintenance

a. Description of Function

Coordinates maintenance and support of electric transmission systems and Distribution systems.

b. Method of Allocation

(1) Services related to electric transmission systems - allocated to the Client Companies based on the Circuit Miles of Electric Transmission Lines Ratio.

(2) Services related to electric Distribution systems - allocated to the Client Companies based on the Miles of Distribution Lines Ratio.

(3) Services related to gas Distribution systems – allocated to the Client Companies based on the Labor Dollars Ratio.

5. Marketing and Customer Relations

a. Description of Function

Advises the Client Companies in relations with domestic utility customers.

The activities of the Function include:

(1) Design and administration of sales and demand-side management programs.

(2) Customer meter reading, billing and payment processing.

(3) Customer services including the operation of call center.

b. Method of Allocation

(1) Design and administration of sales and demand-side management programs - allocated to the Client Companies based on the Sales Ratio.

(2) Customer billing and payment processing - allocated to the Client Companies based on the Number of Customers Ratio.

(3) Customer Services - allocated to the Client Companies based on the Number of Customers Ratio.

6. Transmission and Distribution Engineering and Construction

a. Description of Function

Designs and monitors construction of electric transmission and Distribution Lines and associated facilities. Prepares cost and schedule estimates, visits construction sites to ensure that construction activities coincide with plans, and administers construction contracts.

b. Method of Allocation

(1) Transmission engineering and construction allocated to the Client Companies based on the Electric Transmission Plant's Construction-Expenditures Ratio.

(2) Distribution engineering and construction allocated to the Client Companies based on the Distribution plant's Construction-Expenditures Ratio.

7. Power Engineering and Construction

a. Description of Function

Designs, monitors and supports the construction and retirement of electric generation facilities. Prepares specifications and administers contracts for construction of new electric generating units, improvements to existing electric generating units, and the retirement of existing electric generating equipment, including developing associated operating processes with operations personnel. Prepares cost and schedule estimates and visits construction sites to ensure that construction and retirement activities meet schedules and plans..

b. Method of Allocation

Allocated to the Client Companies based on the Electric Production Plant's Construction-Expenditures Ratio.

8. Human Resources

a. Description of Function

Establishes and administers policies and supervises compliance with legal requirements in the areas of employment, compensation, benefits and employee health and safety. Processes payroll and employee benefit payments. Supervises contract negotiations and relations with labor unions.

b. Method of Allocation

Allocated to the Client Companies and to other Functions of the Service Company based on the Number of Employees Ratio.

9. Materials Management

a. Description of Function

Provides services in connection with the procurement of materials and contract services, processes payments to vendors, and provides management of material and supplies inventories.

b. Method of Allocation

(1) Procurement of materials and contract services and vendor payment processing - allocated to the Client Companies and to other Functions of the Service Company based on the Procurement Spending Ratio.

(2) Management of materials and supplies inventory – allocated to the Client Companies on the Inventory Ratio.

10. Facilities

a. Description of Function

Operates and maintains office and service buildings. Provides security and housekeeping services for such buildings and procures office furniture and equipment.

b. Method of Allocation

Allocated to the Client Companies and to other Functions of the Service Company based on the Square Footage Ratio.

11. Accounting

a. Description of Function

Maintains the books and records of Duke Energy Corporation and its affiliates, prepares financial and statistical reports, prepares tax filings and supervises compliance with the laws and regulations.

b. Method of Allocation

Allocated to the Client Companies based on a weighted average of the Gross Margin Ratio, the Labor Dollar Ratio and the PP&E Ratio.

12. Power and Gas Planning and Operations

a. Description of Function

Coordinate the planning, management and operation of Duke Energy Corporation's power generation, transmission and Distribution systems. The activities of the Function include:

(1) System Planning - planning of additions and retirements to the electric generation units and transmission and Distribution systems belonging to the regulated utilities owned by Duke Energy Corporation.

(2) System Operations - coordination of the dispatch and operation of the electric generating units and transmission and Distribution systems belonging to the regulated utilities owned by Duke Energy Corporation.

(3) Power Operations – provides management and support services for the electric generation units owned or operated by subsidiaries of Duke Energy Corporation.

(4) Wholesale Power Operations – coordination of Duke Energy Corporation's wholesale power operations.

b. Method of Allocation

(1) System Planning

(a) Generation planning - allocated to the Client Companies based on the Electric Peak Load Ratio.

(b) Transmission planning – allocated to the Client Companies based on the Electric Peak Load Ratio.

(c) Electric Distribution planning - allocated to the Client Companies based on a weighted average of the Miles of Distribution Lines Ratio and the Electric Peak Load Ratio.

(d) Gas Distribution planning – allocated to the Client Companies based on the Construction-Expenditures Ratio.

(2) System Operations –

(a) Generation Dispatch - allocated to the Client Companies based on the Sales Ratio.

(b) Transmission Operations - allocated to the Client Companies based on a weighted average of the Circuit Miles of Electric Transmission Lines Ratio and the Electric Peak Load Ratio.

(c) Electric Distribution Operations - allocated to the Client Companies based on a weighted average of the Miles of Distribution Lines Ratio and the Electric Peak Load Ratio.

(d) Gas Distribution Operations – allocated to the Client Companies based on the Construction-Expenditures Ratio.

(3) Power Operations – allocated to the Client Companies based on the Generating Unit MW Capability Ratio.

(4) Wholesale Power Operations – allocated to the Client Companies based on the Sales Ratio.

13. Public Affairs

a. Description of Function

Prepares and disseminates information to employees, customers, government officials, communities and the media. Provides graphics, reproduction lithography, photography and video services.

b. Method of Allocation

(1) Services related to corporate governance, public policy, management and support services - allocated to the Client Companies based on a weighted average of the Gross Margin Ratio, the Labor Dollar Ratio and the PP&E Ratio.

(2) Services related to utility specific activities - allocated to the Client Companies based on a weighted average of the Number of Customers Ratio and the Number of Employees Ratio.

14. Legal

a. Description of Function

Renders services relating to labor and employment law, litigation, contracts, rates and regulatory affairs, environmental matters, financing, financial reporting, real estate and other legal matters.

b. Method of Allocation

Allocated to the Client Companies based on a weighted average of the Gross Margin Ratio, the Labor Dollar Ratio and the PP&E Ratio.

15. Rates

a. Description of Function

Determines the Client Companies' revenue requirements and rates to electric and gas requirements customers. Administers interconnection and joint ownership agreements. Researches and forecasts customers' usage.

b. Method of Allocation

Allocated to the Client Companies based on the Sales Ratio.

16. Finance

a. Description of Function

Renders services to Client Companies with respect to investments, financing, cash management, risk management, claims and fire prevention. Prepares budgets, financial forecasts and economic analyses.

b. Method of Allocation

Allocated to the Client Companies based on a weighted average of the Gross Margin Ratio, the Labor Dollar Ratio and the PP&E Ratio.

17. Rights of Way

a. Description of Function

Purchases, surveys, records, and sells real estate interests for Client Companies.

b. Method of Allocation

(1) Services related to Distribution system - allocated to the Client Companies based on the Miles of Distribution Lines Ratio.

(2) Services related to electric generation system- allocated to the Client Companies based on the Electric Peak Load Ratio.

(3) Services related to electric transmission system – allocated to the Client Companies based on the Circuit Miles of Electric Transmission Lines Ratio.

18. Internal Auditing

    a. Description of Function

    Reviews internal controls and procedures to ensure that assets are safeguarded and that transactions are properly authorized and recorded.

    b. Method of Allocation

    Allocated to the Client Companies based on a weighted average of the Gross Margin Ratio, the Labor Dollar Ratio and the PP&E Ratio.

19. Environmental, Health and Safety

    a. Description of Function

    Establishes policies and procedures and governance framework for compliance with environmental, health and safety ("EHS") issues, monitors compliance with EHS requirements and provides EHS compliance support to the Client Companies' personnel.

    b. Method of Allocation

    (1) Services related to corporate governance, environmental policy, management and support services - allocated to the Client Companies based on a weighted average of the Gross Margin Ratio, the Labor Dollar Ratio and the PP&E Ratio.

    (2) Services related to utility specific activities – allocated to the Client Companies based on the Sales Ratio

20. Fuels

    a. Description of Function

    Procures coal, gas and oil for the Client Companies. Ensures compliance with price and quality provisions of fuel contracts and arranges for transportation of the fuel to the generating stations.

    b. Method of Allocation

    Allocated to the Client Companies based on the Sales Ratio.

21. Investor Relations

a. Description of Function

Provides communications to investors and the financial community, performs transfer agent and shareholder record keeping functions, administers stock plans and performs stock-related regulatory reporting.

b. Method of Allocation

Allocated to the Client Companies based on a weighted average of the Gross Margin Ratio, the Labor Dollars Ratio and the PP&E Ratio.

22. Planning

a. Description of Function

Facilitates preparation of strategic and operating plans, monitors trends and evaluates business opportunities.

b. Method of Allocation

Allocated to the Client Companies based on a weighted average of the Gross Margin Ratio, the Labor Dollars Ratio and the PP&E Ratio.

23. Executive

a. Description of Function

Provides general administrative and executive management services.

b. Method of Allocation

Allocated to the Client Companies based on a weighted average of the Gross Margin Ratio, the Labor Dollars Ratio and the PP&E Ratio.

APPENDIX B

DE-CAROLINAS CONDITIONS

1. In connection with the NCUC approval the Merger in NCUC Docket No. E-7, Sub 795, the NCUC adopted certain Regulatory Conditions and a revised Code of Conduct governing transactions between DE-Carolinas and its affiliates. Pursuant to the Regulatory Conditions, the following provisions are applicable to DE-Carolinas:

(a) DE-Carolinas' participation in this Agreement is voluntary. DE-Carolinas is not obligated to take or provide services or make any purchases or sales pursuant to this Agreement, and DE-Carolinas may elect to discontinue its participation in this Agreement at its election after giving notice under Section 3.1 of the Agreement.

(b) DE-Carolinas may not make or incur a charge under this Agreement except in accordance with North Carolina law and the rules, regulations and orders of the NCUC promulgated thereunder.

(c) DE-Carolinas may not seek to reflect in rates any (i) costs incurred under this Agreement exceeding the amount allowed by the NCUC or (ii) revenue level earned under this Agreement less than the amount imputed by the NCUC; and

(d) Except to the extent that requesting FERC review and authorization pursuant to Section 1275(b) of Subtitle F in Title XII of PUHCA 2005, as provided in Regulatory Condition No. 21, may be determined to have preemptive effect under the law, DE-Carolinas will not assert in any forum that the NCUC's authority to assign, allocate, make pro-forma adjustments to or disallow revenues and costs for retail ratemaking and regulatory accounting and reporting purposes is preempted and will bear the full risk of any preemptive effects of federal law with respect to this Agreement.

2. With respect to the transfer by DE-Carolinas under this Agreement of the control of, operational responsibility for, or ownership of any DE-Carolinas assets used for the generation, transmission or distribution of electric power to its North Carolina retail customers with a gross book value in excess of ten million dollars ($10 million), the following shall apply:

(a) DE-Carolinas may not commit to or carry out the transfer except in accordance with all applicable law, and the rules, regulations and orders of the NCUC promulgated thereunder; and

(b) DE-Carolinas may not include in its North Carolina cost of service or rates the value of the transfer, whether or not subject to federal law, except as allowed by the NCUC in accordance with North Carolina law.

UTILITY MONEY POOL AGREEMENT

This UTILITY MONEY POOL AGREEMENT (this "Agreement") is made and entered into as of November 1, 2008 ("Effective Date") by and among Duke Energy Corporation, a Delaware corporation ("Duke Energy"), Cinergy Corp., a Delaware corporation ("Cinergy"), Duke Energy Carolinas, LLC, a North Carolina limited liability company ("DE-Carolinas"), Duke Energy Indiana, Inc., an Indiana corporation ("DE-Indiana"), Duke Energy Ohio, Inc., an Ohio corporation ("DE-Ohio"), Duke Energy Kentucky, Inc., a Kentucky corporation ("DE-Kentucky"), Miami Power Corporation, an Indiana corporation ("Miami"), KO Transmission Company, a Kentucky corporation ("KO"), and Duke Energy Business Services LLC, a Delaware limited liability company ("Duke Services"), (each a "party" and collectively, the "parties") .

Recitals

Each of DE-Carolinas, DE-Indiana, DE-Ohio, DE-Kentucky and Miami is a public utility company and a subsidiary company of Duke Energy. Duke Services is a subsidiary service company of Duke Energy. KO is a nonutility company and a subsidiary company of DE-Ohio.

The parties from time to time have need to borrow funds on a short-term basis. Some of the parties from time to time have funds available to loan on a short-term basis. The parties desire to establish a cash management program (the "Utility Money Pool") to coordinate and provide for certain of their short-term cash and working capital requirements.

The terms of this Agreement are substantially similar to a prior agreement entered into among the parties as of January 2, 2007, and the purpose of this Agreement is to reflect the merger of Duke Energy Shared Services, Inc. into Duke Energy Business Services LLC.

NOW THEREFORE, in consideration of the premises, and the mutual promises set forth herein, the parties hereto agree as follows:

ARTICLE I
CONTRIBUTIONS AND BORROWINGS

Section 1.1 Contributions to Utility Money Pool. Each party will determine each day, on the basis of cash flow projections and other relevant factors, in such party's sole discretion, the amount of funds it has available for contribution to the Utility Money Pool, and will contribute such funds to the Utility Money Pool. The determination of whether a party at any time has surplus funds to lend to the Utility Money Pool or shall lend funds to the Utility Money Pool will be made by such party's chief financial officer or treasurer, or by a designee thereof, on the basis of cash flow projections and other

relevant factors, in such party's sole discretion. Each party may withdraw any of its funds at any time upon notice to Duke Services as administrative agent of the Utility Money Pool.

Section 1.2 Rights to Borrow. Subject to the provisions of Section 1.4(b) of this Agreement, all short-term borrowing needs of the parties, with the exception of Duke Energy and Cinergy, will be met by funds in the Utility Money Pool to the extent such funds are available. Each party (other than Duke Energy and Cinergy) shall have the right to make short-term borrowings from the Utility Money Pool from time to time, subject to the availability of funds and the limitations and conditions set forth herein. Each party (other than Duke Energy and Cinergy) may request loans from the Utility Money Pool from time to time during the period from the date hereof until this Agreement is terminated by written agreement of the parties; provided, however, that the aggregate amount of all loans requested by any party hereunder shall not exceed the applicable borrowing limits set forth in applicable orders of regulatory authorities, resolutions of such party's shareholders and Board of Directors, such party's governing corporate documents, and agreements binding upon such party. No loans through the Utility Money Pool will be made to, and no borrowings through the Utility Money Pool will be made by Duke Energy and Cinergy.

Section 1.3 Source of Funds. (a) Funds will be available through the Utility Money Pool from the following sources for use by the parties from time to time: (i) surplus funds in the treasuries of parties other than Duke Energy and Cinergy, (ii) surplus funds in the treasuries of Duke Energy and Cinergy, and (iii) proceeds from borrowings by parties, including the sale of commercial paper by Duke Energy, Cinergy, DE-Carolinas, DE-Indiana, DE-Ohio and DE-Kentucky ("External Funds"), in each case to the extent permitted by applicable laws and regulatory orders. Funds will be made available from such sources in such other order as Duke Services, as administrator of the Utility Money Pool, may determine will result in a lower cost of borrowing to companies borrowing from the Utility Money Pool, consistent with the individual borrowing needs and financial standing of the parties providing funds to the Utility Money Pool.

(b) Borrowing parties will borrow pro rata from each lending party in the proportion that the total amount loaned by such lending party bears to the total amount then loaned through the Utility Money Pool. On any day when more than one fund source (e.g., surplus treasury funds of Duke Energy and Cinergy and other Utility Money Pool participants ("Internal Funds") and External Funds), with different rates of interest, is used to fund loans through the Utility Money Pool, each borrowing party will borrow pro rata from each fund source in the same proportion that the amount of funds provided by that fund source bears to the total amount of short-term funds available to the Utility Money Pool.

Section 1.4 Authorization. (a) Each loan shall be authorized by the lending party's chief financial officer or treasurer, or by a designee thereof.

(b) All borrowings from the Utility Money Pool shall be authorized by the borrowing party's chief financial officer or treasurer, or by a designee thereof. No party shall be required to effect a borrowing through the Utility Money Pool if such party determines that it can (and is authorized to) effect such borrowing at lower cost from other sources, including but not limited to directly from banks or through the sale of its own commercial paper.

Section 1.5 Interest. Each party receiving a loan shall accrue interest monthly on the unpaid principal amount of such loan to the Utility Money Pool from the date of such loan until such principal amount shall be paid in full.

(a) If only Internal Funds comprise the funds available in the Utility Money Pool, the interest rate applicable to loans of such Internal Funds shall be the CD yield equivalent of the 30-day Federal Reserve "AA" Industrial Commercial Paper Composite Rate (or, if no such Composite Rate is established for that day, then the applicable rate shall be the Composite Rate for the next preceding day for which such Composite Rate was established).

(b) If only External Funds comprise the funds available in the Utility Money Pool, the interest rate applicable to loans of such External Funds shall be equal to the lending party's cost for such External Funds (or, if more than one party had made available External Funds on such day, the applicable interest rate shall be a composite rate, equal to the weighted average of the cost incurred by the respective parties for such External Funds).

(c) In cases where both Internal Funds and External Funds are concurrently borrowed through the Utility Money Pool, the rate applicable to all loans comprised of such "blended" funds shall be a composite rate, equal to the weighted average of the (i) cost of all Internal Funds contributed by parties (as determined pursuant to Section 1.5(a) above) and (ii) the cost of all such External Funds (as determined pursuant to Section 1.5(b) above); provided, that in circumstances where Internal Funds and External Funds are available for loans through the Utility Money Pool, loans may be made exclusively from Internal Funds or External Funds, rather than from a "blend" of such funds, to the extent it is expected that such loans would result in a lower cost of borrowing.

Section 1.6 Certain Costs. The cost of compensating balances and fees paid to banks to maintain credit lines by parties lending External Funds to the Utility Money Pool shall initially be paid by the party maintaining such line. A portion of such costs shall be retroactively allocated every month to the parties borrowing such External Funds through the Utility Money Pool in proportion to their respective daily outstanding borrowings of such External Funds.

Section 1.7 Repayment. Each party receiving a loan hereunder shall repay the principal amount of such loan, together with all interest accrued thereon, on demand and in any event within 365 days of the date on which such loan was made. All loans made

through the Utility Money Pool may be prepaid by the borrower without premium or penalty.

Section 1.8 Form of Loans to Parties. Loans to the parties through the Utility Money Pool will be made pursuant to open-account advances, repayable upon demand and in any event not later than one year after the date of the advance; provided, that each lending party shall at all times be entitled to receive upon demand one or more promissory notes evidencing any and all loans by such lender. Any such note shall: (a) be dated as of the date of the initial borrowing, (b) mature on demand or on a date agreed by the parties to the transaction, but in any event not later than one year after the date of the applicable borrowing, and (c) be repayable in whole at any time or in part from time to time, without premium or penalty.

ARTICLE II
OPERATION OF UTILITY MONEY POOL

Section 2.1 Operation. Operation of the Utility Money Pool, including record keeping and coordination of loans, will be handled by Duke Services under the authority of the appropriate officers of the parties. Duke Services shall be responsible for the determination of all applicable interest rates and charges to be applied to advances outstanding at any time hereunder, shall maintain records of all advances, interest charges and accruals and interest and principal payments for purposes hereof, and shall prepare periodic reports thereof for the parties. Duke Services will administer the Utility Money Pool on an at-cost basis. Separate records shall be kept by Duke Services for the money pool established by this agreement and any other money pool administered by Duke Services.

Section 2.2 Investment of Surplus Funds in the Utility Money Pool. Funds not required to meet Utility Money Pool loans (with the exception of funds required to satisfy the Utility Money Pool's liquidity requirements) will ordinarily be invested in one or more short-term investments, including: (i) interest-bearing accounts with banks; (ii) obligations issued or guaranteed by the U.S. government and/or its agencies and instrumentalities, including obligations under repurchase agreements; (iii) obligations issued or guaranteed by any state or political subdivision thereof, provided that such obligations are rated not less than A by a nationally recognized rating agency; (iv) commercial paper rated not less than A-1 or P-1 or their equivalent by a nationally recognized rating agency; (v) money market funds; (vi) bank certificates of deposit; (vii) Eurodollar certificates of deposit or time deposits; and (viii) such other investments as the parties mutually determine .

Section 2.3 Allocation of Interest Income and Investment Earnings. The interest income and other investment income earned by the Utility Money Pool on loans and investment of surplus funds will be allocated among the parties in accordance with the proportion each party's contribution of funds in the Utility Money Pool bears to the total amount of funds in the Utility Money Pool and the cost of any External Funds provided

to the Utility Money Pool by such party. Interest and other investment earnings will be computed on a daily basis and settled once per month.

Section 2.4 Event of Default. If any party shall generally not pay its debts as such debts become due, or shall admit in writing its inability to pay its debts generally, or shall make a general assignment for the benefit of creditors, or any proceeding shall be instituted by or against any party seeking to adjudicate it a bankrupt or insolvent, then the other parties may declare the unpaid principal amount of any loans to such party, and all interest thereon, to be forthwith due and payable and all such amounts shall forthwith become due and payable.

ARTICLE III
MISCELLANEOUS

Section 3.1 Amendments. No amendment to this Agreement shall be effective unless set forth in writing and executed by each of the parties. To the extent that applicable state law or regulation or other binding obligation requires that any such amendment be filed with any affected state public utility commission for its review or otherwise, the parties shall comply in all respects with any such requirements.

Section 3.2 Legal Responsibility. Nothing herein contained shall render any party liable for the obligations of any other party hereunder and the rights, obligations and liabilities of the parties are several in accordance with their respective obligations, and not joint.

Section 3.3 Governing Law. This Agreement shall be governed by and construed in accordance with the laws of the State of New York, without regard to conflicts of laws principles thereof.

Section 3.4 Effective Date; Term. This Agreement shall become effective on the Effective Date and shall continue in full force and effect until terminated by the parties. This Agreement may be terminated and thereafter will be of no further force and effect upon the mutual consent in writing of all of the parties.

Section 3.5 Entire Agreement. This Agreement contains the entire agreement between and among the parties with respect to the subject matter hereof and supersedes any prior or contemporaneous contracts, agreements, understandings or arrangements, whether written or oral, with respect thereto (including without limitation that certain Utility Money Pool Agreement between and among the parties dated as of January 2, 2007). Any oral or written statements, representations, promises, negotiations or agreements, whether prior hereto or concurrently herewith, are superseded by and merged into this Agreement.

Section 3.6 Severability; Regulatory Requirements. If any provision of this Agreement shall be determined to be invalid or unenforceable, the remainder of this Agreement shall not be affected thereby. Without limiting the generality of the

foregoing, the transactions contemplated under this Agreement shall in all cases, and notwithstanding anything herein to the contrary, be subject to any limitations or restrictions contained in any applicable orders or authorizations, statutory provisions, rules or regulations, or agreements, whether now in existence or hereinafter promulgated, of those regulatory or governmental agencies, including without limitation any affected state public utility commission or the Federal Energy Regulatory Commission, having jurisdiction over any of the parties. To the extent, if any, that at any time any provision of this Agreement conflicts with any such limitation or restriction of any such regulatory agencies, such limitation shall control.

Section 3.7 Assignment. Neither this Agreement nor any of the rights, interests or obligations hereunder shall be assigned, in whole or in part, by operation of law or otherwise by any of the parties hereto without the prior written consent of each of the other parties. Any attempted or purported assignment in violation of the preceding sentence shall be null and void and of no effect whatsoever. Subject to the preceding two sentences, this Agreement shall be binding upon, inure to the benefit of, and be enforceable by, the parties and their respective successors and assigns.

Section 3.8 Captions, etc. The captions and headings used in this Agreement are for convenience of reference only and shall not affect the construction to be accorded any of the provisions hereof. As used in this Agreement, "hereof," "hereunder," "herein," "hereto," and words of like import refer to this Agreement as a whole and not to any particular section or other paragraph or subparagraph thereof.

Section 3.9 Counterparts. This Agreement may be executed in one or more counterparts, each of which shall be deemed a duplicate original hereof, but all of which shall be deemed one and the same Agreement.

[REMAINDER OF PAGE INTENTIONALLY LEFT BLANK]

IN WITNESS WHEREOF, the undersigned companies have duly caused this Utility Money Pool Agreement to be executed on their behalf on the Effective Date above by the undersigned thereunto duly authorized.

DUKE ENERGY CORPORATION

By: _____
Richard G. Beach
Assistant Corporate Secretary

CINERGY CORP.

By: _____
Richard G. Beach
Assistant Secretary

DUKE ENERGY BUSINESS SERVICES LLC

By: _____
Richard G. Beach
Assistant Secretary

DUKE ENERGY CAROLINAS, LLC

By: _____
Richard G. Beach
Assistant Secretary

DUKE ENERGY INDIANA, INC.

By: _____
Richard G. Beach
Assistant Secretary

DUKE ENERGY OHIO, INC.

By: _____
Richard G. Beach
Assistant Secretary

DUKE ENERGY KENTUCKY, INC.

By: _____
Richard G. Beach
Assistant Secretary

MIAMI POWER CORPORATION

By: _____
Richard G. Beach
Assistant Secretary

KO TRANSMISSION COMPANY

By: _____
Richard G. Beach
Assistant Secretary

AMENDED AND RESTATED

PURCHASE AND SALE AGREEMENT

Dated as of March 31, 2002

among

THE CINCINNATI GAS & ELECTRIC COMPANY,
PSI ENERGY, INC., AND THE UNION LIGHT,
HEAT AND POWER COMPANY,
as Originators,

and

CINERGY RECEIVABLES COMPANY LLC, as SPE

TABLE OF CONTENTS

Section 1. Definitions and Related Matters 1

Section 1.1. Defined Terms 1
Section 1.2 Other Interpretive Matters 1

Section 2. Agreement to Purchase and Sell 2

Section 2.1 Purchase and Sale 2
Section 2.2 Timing of Purchases 3
Section 2.3 Purchase Price 3
Section 2.4 Transfer of Records to SPE 5
Section 2.5 No Recourse or Assumption of Obligations 5
Section 2.6 Intentions of the Parties 5

Section 3. Administration and Collection 6

Section 3.1 Appointment of Collection Agent 6
Section 3.1.1 Replacement of Collection Agent; Notification of Obligor 6
Section 3.2 Deemed Collections 7
Section 3.3 Application of Collections 8
Section 3.4 Responsibilities of the Originator 8

Section 4. Representations and Warrants 8

Section 4.1 Mutual Representations and Warrants 8
Section 4.2 Additional Representations and Warrants 9

Section 5. General Covenants 11

Section 5.1 Affirmative Covenants of the Originators 11
Section 5.2 Reporting Requirements of the Originators 13
Section 5.3 Negative Covenants of the Originators 14

Section 6. Termination of Purchases 16

Section 6.1 Voluntary Termination 16
Section 6.2 Automatic Termination 16

Section 7. Indemnification 16

Section 7.1 Indemnification by Originators of SPE, Etc. 16

Section 8. Miscellaneous 18

Section 8.1 Amendments, Waivers, Etc. 18
Section 8.2 Assignment of Receivables Purchase Agreement 18
Section 8.3 Binding Effect; Assignment 19
Section 8.4 Survival 19
Section 8.5 Costs, Expenses and Taxes 19
Section 8.6 Execution of Counterparts; Integration 20
Section 8.7 Governing Law; Submission of Jurisdiction 20
Section 8.8 No Proceedings 20
Section 8.9 [Intentionally Omitted] 20
Section 8.10 Notices 20
Section 8.11 Entire Agreement 20

This Amended and Restated Purchase and Sale Agreement (this *"Agreement"*), dated as of March 31, 2002 (the *"Agreement Date"*), is among THE CINCINNATI GAS & ELECTRIC COMPANY, an Ohio corporation (*"CG&E"*), PSI ENERGY, INC., an Indiana corporation (*"PSI"*) and THE UNION LIGHT, HEAT AND POWER COMPANY, a Kentucky corporation (*"ULH&P"*) (each an *"Originator"* and collectively, the *"Originators"*), and CINERGY RECEIVABLES COMPANY LLC, a Delaware limited liability company (the *"SPE"*).

BACKGROUND:

WHEREAS, the SPE is a qualified special purpose entity, the sole membership interest of which is held by Cinergy Corp., a Delaware corporation (the *"Parent"*) and the sole shareholder of each of the CG&E and PSI;

WHEREAS, the Originators each generate Receivables in the ordinary course of their respective businesses;

WHEREAS, the Originators, in order to improve liquidity at the lowest possible cost, desire to sell their Receivables to the SPE, and the SPE is willing to purchase Receivables from each of the Originators, on the terms and subject to the conditions set forth herein;

WHEREAS, the each of Originators and the SPE intend this transaction to be an absolute and irrevocable true sale of Receivables by the Originators to the SPE, providing the SPE with the full benefits of ownership of the Receivables, and the Originators and the SPE do not intend the transactions hereunder to be characterized as a loan from the SPE to the Originators;

NOW, THEREFORE, in consideration of the premises and the mutual agreements herein contained, the parties hereto agree as follows:

Section 1. Definitions and Related Matters.

Section 1.1. Defined Terms. In this Agreement, unless otherwise specified or defined herein: (a) capitalized terms are used as defined in Annex I to the Receivables Loan Agreement dated as of the Agreement Date (as amended or modified from time to time, the *"Second Tier Agreement"*) among SPE, as borrower, CG&E, as collection agent (the *"Collection Agent"*), Jupiter Securitization Corporation and Windmill Funding Corporation, as the Lenders, Bank One, N.A. and ABN AMRO Bank N.V., as the Servicing Agents, and ABN AMRO Bank, N.V., as the Administrative Agent, as such agreement may be amended or modified from time to time; and (b) terms defined in Article 9 of the UCC and not otherwise defined herein are used as defined in such Article 9 as in effect on the date hereof.

Section 1.2. Other Interpretive Matters. In this Agreement, unless otherwise specified: (a) references to any Section or Annex refer to such Section of, or Annex to, this Agreement, and references in any Section or definition to any subsection or clause refer to such subsection or clause of such Section or definition; (b) *"herein," "hereof,"*

"hereto," "hereunder" and similar terms refer to this Agreement as a whole and not to any particular provision of this Agreement; (c) *"including"* means including without limitation, and other forms of the verb *"to include"* have correlative meanings; (d) the word *"or"* is not exclusive; and (e) captions are solely for convenience of reference and shall not affect the meaning of this Agreement.

Section 2. Agreement to Purchase and Sell.

Section 2.1. Purchase and Sale. On the terms and subject to the conditions set forth in this Agreement, each Originator, severally and for itself, agrees to sell to the SPE, and the SPE hereby agrees to purchase from each Originator, from time to time on and after the Initial Funding Date all of such Originator's right, title and interest in, to and under:

(a) each Receivable of each of the Originators that existed and was owing to the Originators at the closing of each Originator's business on the Agreement Date;

(b) each Receivable generated by each of the Originators from and including the Agreement Date to and including the Termination Date;

(c) all rights to, but not the obligations of the Originators under the Receivables;

(d) all monies due or to become due to the Originators with respect to any of the foregoing;

(e) all books and records of the Originators related to any of the foregoing, and all rights, remedies, powers, privileges, title and interest of the Originators in each Lock-Box Account, all amounts on deposit therein, all certificates and instruments, if any, from time to time evidencing such accounts and amounts on deposit therein, and all related agreements between the Originators and each Lock-Box Bank; and

(f) all Collections and other proceeds and products of any of the foregoing (as defined in the UCC) that are or were received by the Originators on or after the Agreement Date, including, without limitation, all funds which either are received by the Originators, the SPE or the Collection Agent from or on behalf of the Obligors in payment of any amounts owed (including, without limitation, invoice price, finance charges, interest and all other charges) in respect of Receivables, or are applied to such amounts owed by the Obligors (including, without limitation, any insurance payments that the Originators or the Collection Agent applies in the ordinary course of its business to amounts owed in respect of any Receivable, and net proceeds of sale or other disposition of repossessed goods or other collateral or property of the Obligors in respect

of Receivables or any other parties directly or indirectly liable for payment of such Receivables).

All purchases hereunder are absolute and irrevocable and shall be made without recourse except as expressly provided herein, but shall be made pursuant to, and in reliance upon, the representations, warranties and covenants of the Originators set forth in this Agreement. No obligation or liability to any Obligor on any Receivable is intended to be, or shall be, assumed by the SPE hereunder, and any such assumption is expressly disclaimed. The SPE's foregoing commitment to purchase Receivables and the proceeds and rights described in clauses (c) through (f) (collectively, the *"Related Rights"*, and together with the Receivables, the *"Sold Property"*) is herein called the *"Purchase Facility."* In connection with the transfer of ownership in the Receivables and Related Rights, by signing this Agreement in the space provided, each Originator hereby authorizes the filing of all applicable UCC financing statements in all necessary jurisdictions.

Section 2.2. Timing of Purchases. All of the Receivables existing at the close of each Originator's business on the Agreement Date will be sold to SPE as of the Initial Funding Date. On each Business Day after the Initial Funding Date, until the occurrence of the Termination Date, each Originator agrees to sell to the SPE; and the SPE agrees to buy from each Originator, all Receivables, Collections and Related Rights existing as of the close of business on the immediately preceding Business Day which have not been previously purchased hereunder. Until the Termination Date, each purchase described in the preceding sentence shall automatically occur at 3:00 p.m. (Cincinnati time) on the date of such purchase subject to the payment of the Purchase Price under Section 2.3, but otherwise without further action on the part of the Originators and the SPE. The proceeds with respect to each Receivable (including all Collections with respect thereto) shall be sold at the same time as such Receivable, whether such proceeds (or Collections) exist at such time or arise or are acquired thereafter.

Section 2.3. Purchase Price. (a) The aggregate purchase price for the Receivables originated by an Originator sold on the Initial Funding Date shall be the Purchase Price. The purchase price for Receivables subsequently sold during any Settlement Period shall be calculated in accordance with the Purchase Price then in effect. The Required Discount component of the Purchase Price for Receivables generated by an Originator shall be calculated solely by reference to the Receivables generated by that Originator such that the SPE shall pay a separate and distinct Purchase Price for the Receivables generated by each Originator.

(b) On the Initial Funding Date, SPE shall pay each Originator the Purchase Price for the Receivables originated by such Originator and sold on that date. On each Business Day after the Initial Funding Date on which an Originator sells any Receivables originated by it to SPE pursuant to the terms of Section 2.1, until the Termination Date, the SPE shall pay to such Originator the Purchase Price of such Receivables (i) by

depositing into such account as such Originator shall specify immediately available funds from monies then held by or on behalf of the SPE solely to the extent that such monies do not constitute Collections that are required to be identified or are deemed to be held by the Collection Agent pursuant to the Second Tier Agreement for the benefit of, or required to be distributed to, the Administrative Agent or the Lenders pursuant to the Second Tier Agreement or required to be paid to the Collection Agent as the Collection Agent Fee, or otherwise necessary to pay current expenses of the SPE (such available monies, the *"Available Funds"*) and provided that such Originator has paid all amounts then due by such Originator hereunder or (ii) if SPE has no Available Funds, by increasing the principal amount owed to such Originator under a promissory note (as amended or modified from time to time, each a *"Subordinated Note"* and collectively the *"Subordinated Notes"*) executed and delivered by the SPE to the order of such Originator as of the Initial Funding Date; *provided, however,* that the SPE shall at all times maintain a minimum net worth (calculated after giving effect to all such purchases and all outstanding Subordinated Notes) of not less than $3,000,000.00. The outstanding principal amount owed to an Originator under the related Subordinated Note shall be reduced from time to time in the manner required by Section 3.2 hereof or by payments made by the SPE from Available Funds, *provided* that such Originator has paid all amounts then due to the SPE by such Originator hereunder. Any Available Funds remaining after payment in full of all outstanding principal and accrued and unpaid interest owing in respect of the Subordinated Notes shall be used: first, to maintain the SPE's minimum net worth as required herein; and second, to effectuate a dividend of any remaining Available Funds to its member(s). Each Originator shall make all appropriate record keeping entries with respect to amounts due to such Originator under the related Subordinated Note to reflect payments by the SPE thereon and increases of the principal amount thereof, and such Originator's books and records shall constitute rebuttable presumptive evidence of the principal amount of and accrued interest owed to such Originator under the related Subordinated Note. Each Originator, by accepting the proceeds of the Purchase Price for a sale of Receivables, shall be deemed to have certified to the SPE the satisfaction of all conditions precedent to such sale, and title to the Receivables included in such sale shall vest in the SPE regardless of whether the conditions precedent have in fact been satisfied. All amounts to be paid by the SPE to an Originator hereunder shall be paid in accordance with the terms hereof no later than 12:00 p.m. (Cincinnati time) on the date when due in immediately available funds to such accounts as such Originator may from time to time specify in writing. Payments received by an Originator after such time shall be deemed to have been received on the next Business Day. In the event that any payment becomes due on a day which is not a Business Day, then such payment shall be made on the next succeeding Business Day. The SPE shall, to the extent permitted by law, pay to each Originator, on demand, interest on all amounts not paid when due hereunder at 2% per annum above the Prime Rate in effect on the date such payment was due; *provided, however,* that such interest rate shall not at any time exceed the maximum rate permitted by applicable law. All computations of interest payable hereunder shall be made on the basis of a year of 360 days for the actual number of days (including the first but excluding the last day) elapsed.

Section 2.4. Transfer of Records to SPE. (a) Each purchase of Receivables hereunder shall include the transfer to the SPE of all of the applicable Originator's right and title to and interest in the records relating to such Receivables and rights to the use of the Originator's computer software to access and create the records, and each Originator hereby agrees that such transfer shall be effected automatically with each such purchase, without any action on the part of the parties hereto or any further documentation.

(b) Each Originator shall take such action reasonably requested by the SPE, from time to time hereafter, that may be necessary or appropriate to ensure that the SPE and its assignees have an enforceable ownership interest in the records relating to the Receivables purchased hereunder, including the rights to the use of computer software to access and create the records.

Section 2.5. No Recourse or Assumption of Obligations. The purchase and sale of Receivables under this Agreement shall be without recourse to the Originators, *provided, however,* that (i) each Originator shall be severally liable to the SPE for all representations, warranties and covenants made by such Originator pursuant to this Agreement and (ii) such purchase and sale does not constitute and is not intended to result in an assumption by the SPE or any assignee of any obligation of the Originators or any other person arising in connection with the Receivables, and the SPE shall not have any obligation or liability with respect to any Receivable, nor shall the SPE have any obligation or liability to any Obligor or other customer or client of an Originator (including any obligation to perform any of the obligations of such Originator under any Receivable).

Section 2.6 Intentions of the Parties. Each Originator and the SPE intend that the sale transactions hereunder shall be absolute and irrevocable and shall constitute true sales of Receivables by such Originator to the SPE, providing the SPE with the full risks and benefits of ownership of the Receivables originated by such Originator (such that the Receivables would not be property of such Originator's estate in the event of such Originator's bankruptcy). If, however, with respect to Sold Property conveyed to the SPE by the Originators, despite the intention of the parties, the conveyances provided for in this Agreement are determined not to be "true sales" of such Sold Property from the Originators to the SPE, then this Agreement shall also be deemed to be a "security agreement" within the meaning of Article 9 of the UCC and each Originator hereby grants to the SPE a "security interest" within the meaning of Article 9 of the UCC in all of such Originator's right, title and interest in and to the such Sold Property, now existing and thereafter created, to secure a loan in an amount equal to the aggregate Purchase Prices therefor and each of such Originator's other payment obligations under this Agreement.

Section 3. Administration and Collection.

Section 3.1. Appointment of Collection Agent. (a) The SPE hereby appoints CG&E as its Collection Agent, and the Collection Agent accepts such appointment. Subject to the terms of the Second Tier Agreement, the Collection Agent shall be responsible for collecting the Receivables, tracking, holding and remitting the Collections and fulfilling all other duties expressly assigned to it in this Agreement. The SPE acknowledges that CG&E may delegate to PSI its responsibilities as Collection Agent with respect to Receivables originated by PSI.

(b) The Collection Agent shall, on each day on which Collections are received by it, set aside and hold in trust for the SPE such Collections.

(c) The SPE grants the Collection Agent the authority necessary to carry out its duties under this Agreement for so long as its acting as Collection Agent.

(d) The SPE grants to the Collection Agent, for so long as it is acting in that capacity, an irrevocable power of attorney to endorse all drafts, checks and other forms of payment made out in the SPE's name and to settle, adjust and forgive any Receivable, subject to the provisions of the Second Tier Agreement. Upon any replacement of the Collection Agent, such power of attorney in favor of the replaced Collection Agent will terminate and have no further force or effect.

(e) The Collection Agent shall exercise reasonable care in the performance of its duties under this Agreement and shall use the same degree of care and skill which it applies to its own property.

Section 3.1.1. Replacement of Collection Agent; Notification of Obligors. (a) Upon the occurrence of any of the following events (each a *"Termination Event"*), the SPE acknowledges that under the Second Tier Agreement the Administrative Agent may remove CG&E as the Collection Agent, appoint a new Collection Agent, take control of the Lock-Box Accounts, notify Obligors of the SPE's ownership interest in the Receivables and exercise all other incidences of and rights as a secured party to the extent of its Interest in the Receivables:

(i) any Originator's long-term senior secured debt is rated less than BBB – by Standard & Poor Ratings Group or less than Baa3 by Moody's Investors Services, Inc;

(ii) any Originator shall breach in any material respect any representation or warranty or fail to perform or observe any material term, covenant or agreement, applicable to it which is contained in this Agreement or any other Sale Document;

(iii) any Originator shall fail to pay when due any amount in respect of any debts or obligations having, in the case of the Originators, an aggregate principal amount outstanding of at least (with respect to CG&E and ULH&P, collectively, or PSI, individually) $25,000,000.00 and such failure shall continue after any applicable grace period, or any other event shall occur or condition shall exist in respect of such debts or obligations and shall continue after any applicable grace period, the effect of which is to cause such debts or obligations to become due and payable prior to the stated maturity thereof; *provided*, that the failure to pay a judgment, writ, warrant of attachment or similar process in the amount set forth above shall not give the SPE the rights described above unless it remains unvacated, unbonded or unstayed for a period of 30 days;

(iv) any Originator is in bankruptcy, reorganization, insolvency or similar proceedings;

(b) Upon removal of Collection Agent by the Administrative Agent, pursuant to and in accordance with the Second Tier Agreement, the SPE shall have the right to take control of the Lock-Box Accounts, notify Obligors of its ownership interest in the Receivables and exercise all other incidences of ownership in the Receivables.

(c) If CG&E is removed as Collection Agent, CG&E and the SPE shall, to the extent permitted by any applicable licensing agreement, transfer to the SPE all records, correspondence, and documents (including computer software) requested by the SPE and shall permit such persons to have access to, and to copy, all software used by CG&E or any other Originator in the collection, administration or monitoring of the Receivables. To the extent the consent of any third party is required for CG&E to transfer to the SPE or to permit the SPE to have access to or to copy, any item described in the immediately preceding sentence, CG&E agrees to use its best efforts to assist the SPE in obtaining such consent.

(d) At any time and from time to time, the Originators may designate an alternate Collection Agent. Provided that (i) the Originators give at least sixty (60) days prior written notice of such designation and (ii) the long term senior secured indebtedness of such designee at the time of the giving of such notice has a rating or ratings of BBB – or higher issued by Standard & Poor's Ratings Group or Baa3 or higher by Moody's Investor Services, Inc., (A) such designee shall be deemed to be the Collection Agent as of the date specified in such notice, and (B) from and after such date, the entity designated as Collection Agent immediately prior to the giving of such notice shall not incur any further liabilities under this Agreement and no rights of Collection Agent under this Agreement shall accrue in favor of the entity designated as Collection Agent immediately prior to the giving of such notice.

Section 3.2. Deemed Collections. If on any day the outstanding balance of a Receivable is reduced or cancelled as a result of any defective or rejected goods or services, any cash discount or adjustment (including any adjustment resulting from the application of any special refund or other discounts or any reconciliation), any setoff or

credit (whether such claim or credit arises out of the same, a related, or an unrelated transaction) or other reason not attributable to or arising from the creditworthiness of the Obligor or the financial ability or inability of the Obligor to pay the undisputed indebtedness of such Receivable, (i) the applicable Originator shall be deemed to have received on such day a Collection on such Receivable in the amount of such reduction or cancellation and (ii) such Receivable shall thereupon be, or be deemed to be, reconveyed to such Originator. If on the date of purchase of a Receivable, any representation, warranty, covenant or other agreement of an Originator related to such Receivable set forth in Section 4.2(b) is not true or is not satisfied, (i) such Originator shall be deemed to have received on such day a Collection in the amount of the outstanding balance of such Receivable and (ii) such Receivable shall thereupon be, or be deemed to be, reconveyed to such Originator. Not later than the first Settlement Date after an Originator is deemed pursuant to this Section 3.2 to have received any Collections, such Originator shall transfer to the SPE, in immediately available funds, the amount of such deemed Collections; *provided, however,* that if no such application is required under the Second Tier Agreement, such Originator may reduce the outstanding principal amount of the relevant Subordinated Note in lieu of all or part of such transfer. To the extent that the SPE subsequently receives Collections in respect of any such reconveyed "Receivable," the SPE shall remit such Collections to the applicable Originator not later than the first Settlement Date after the SPE receives the Collections.

Section 3.3. Application of Collections. Any payment by an Obligor in respect of any indebtedness owed by it to the related Originator shall, except as otherwise specified by such Obligor (including by reference to a particular invoice), or required by the related contracts or law, be applied, *first,* as a Collection of any Receivable or Receivables then outstanding of such Obligor in the order of the age of such Receivables, starting with the oldest of such Receivables, and, *second,* to any other indebtedness of such Obligor to such Originator.

Section 3.4. Responsibilities of Originator. Each Originator shall pay when due all taxes (other than taxes on gross receipts and earnings) payable in connection with the Receivables originated by it. Each Originator shall perform all of its obligations under agreements related to the Receivables originated by it. The Administrative Agent's or the Lenders' exercise of any rights under the Second Tier Agreement shall not relieve any Originator from such obligations. Neither the Administrative Agent nor the Lenders shall have any obligation to perform any obligation of any Originator in connection with the Receivables.

Section 4. Representations and Warranties.

Section 4.1. Mutual Representations and Warranties. Each of the Originators severally represents and warrants to the SPE and its assignee as follows:

(a) It is a corporation duly incorporated, validly existing and in good standing under the laws of the jurisdiction of its incorporation and is duly

qualified in good standing as a foreign corporation in each jurisdiction where the failure to be so qualified could reasonably be expected to materially adversely affect its ability to perform its obligations hereunder.

(b) The execution, delivery and performance by such Originator of the Sale Documents are within such Originator's respective corporate powers, have been duly authorized by all necessary corporate action, do not contravene (i) such Originator's charter or by-laws or (ii) any law or any contractual restriction binding on or affecting such Originator, and do not result in or require the creation of any lien (other than pursuant hereto) upon or with respect to any of its properties; and no transaction contemplated hereby requires compliance with any bulk sales act or similar law.

(c) No authorization or approval or other action by, and no notice to or filing with, any governmental authority or regulatory body is required for the due execution, delivery and performance by such Originator of the Sale Documents.

(d) The Sale Documents, when executed and delivered by such Originator, will be the legal, valid and binding obligation of such Originator enforceable against such Originator in accordance with their terms, except as such enforceability may be limited by applicable bankruptcy, reorganization, insolvency or similar laws affecting the enforcement of creditors' rights generally.

Section 4.2. Additional Representations by Each Originator. Each Originator further severally represents and warrants to SPE as follows:

(a) There is no pending or threatened action or proceeding affecting such Originator or any of its subsidiaries (other than those disclosed in such Originator's most recent Form 10-Q filed with the SEC) before any court, governmental agency or arbitrator which reasonably could be expected to materially adversely affect (i) its financial condition or operations or (ii) its ability to perform its obligations hereunder or under any of the Sale Documents, or which reasonably could be expected to affect the legality, validity or enforceability of any Sale Document or of the Ownership Interest.

(b) Such Originator is the legal and beneficial owner of the Receivables originated by it free and clear of any lien, security interest, claim or encumbrance, except as created by this Agreement; upon each purchase, the SPE will acquire a valid and perfected ownership interest in the Receivables then existing and in the Collections with respect thereto, free and clear of any lien, security interest, claim or encumbrance, except as created by this Agreement.

(c) The information provided by such Originator to the Collection Agent for use in each Receivables Activity Report prepared under Section 7.4 of the Second Tier Agreement and all information and Sale Documents furnished or

to be furnished at any time by such Originator to the Administrative Agent, the Servicing Agents or the Lenders in connection with this Agreement is or will be accurate in all material respects as of its date, and no such document will contain any untrue statement of a material fact or will omit to state a material fact.

(d) Each Receivables Activity Report prepared by the Collection Agent under Section 7.4 of the Second Tier Agreement will be accurate in all material respects as of its date, and no such document will contain any untrue statement of a material fact or will omit to state a material fact.

(e) The chief place of business and chief executive office of such Originator and the office where such Originator keeps its records concerning the Receivables are located at the addresses specified in Exhibit A hereof.

(f) The names and addresses of the Lock-Box Banks, together with the account numbers of the Lock-Box Accounts, are specified in Exhibit H to the Second Tier Agreement (or at such other Lock-Box Banks and/or with such other Lock-Box Accounts as have been disclosed to the Administrative Agent).

(g) Each Originator is treating the conveyance of the Sold Property under this Agreement as a sale for purposes of generally accepted accounting principles.

(h) Each Plan is in compliance with all of the applicable material provisions of ERISA and each Plan intended to be qualified under Section 401(a) of the Code is so qualified. No Plan has incurred an "accumulated funding deficiency" (within the meaning of Section 302 of ERISA or Section 412 of the Code) whether or not waived. No Originator nor any ERISA Affiliate: (i) has incurred or expects to incur any liability under Title IV of ERISA, with respect to any Plan, which could give rise to a lien in favor of the PBGC, other than liability for the payment of premiums, all of which have been timely paid when due in accordance with Section 4007 of ERISA, (ii) has incurred or expects to incur any withdrawal liability, within the meaning of Section 4201 of ERISA, (iii) is subject to any lien under Section 412(n) of the Code or Section 302(f) or 4068 of ERISA or arising out of any action brought under Section 4070 or 4301 of ERISA, or (iv) is required to provide security to a Plan under Section 401(a)(29) of the Code. The PBGC has not instituted proceedings to terminate any Plan or to appoint a trustee or administrator of any such Plan and no circumstances exist that constitute grounds under Section 4042 of ERISA to commence any such proceedings.

Section 5. General Covenants.

Section 5.1. Affirmative Covenants of the Originators. Until the Collection Date, each of the Originators (with respect to itself) will, unless SPE has otherwise consented in writing:

(a) Comply in all material respects with all applicable laws, rules, regulations and orders with respect to it, its business and properties and all Receivables and Collections.

(b) Maintain its corporate existence in the jurisdiction of its incorporation, and qualify and remain qualified in good standing as a foreign corporation in each jurisdiction where the failure to be so qualified could reasonably be expected to materially adversely affect its ability to perform its obligations hereunder; *provided* that an Originator may merge or consolidate with or into any person if, immediately after giving effect to such transaction, (i) none of the events described in Section 8.3.1(a) of the Second Tier Agreement (and no event or circumstance which, with the giving of notice or the passage of time, or both, would constitute such an event) has occurred and is continuing and (ii) the long-term senior secured debt of such Originator or the entity surviving such merger or consolidation, as applicable, is rated BBB- or higher by Standard & Poor's Ratings Group and Baa3 or higher by Moody's Investors Service, Inc.

(c) At any reasonable time and upon reasonable prior notice, permit the Lenders, any Servicing Agents or their respective agents or representatives to visit and inspect any of its properties, to examine its books of account and other records and files relating to Receivables (including, without limitation, computer tapes and disks) and to discuss its affairs, business, finances and accounts with its officers.

(d) Maintain and implement administrative and operating procedures (including, without limitation, an ability to recreate records evidencing Receivables in the event of the destruction of the originals thereof), and keep and maintain all records and other information, reasonably necessary or advisable for the collection of Receivables (including, without limitation, records adequate to permit, on a daily basis, a reasonable estimate of Receivables and all Collections and adjustments to Receivables).

(e) At its expense, timely and fully perform and comply with all material provisions and covenants required to be observed by such Originator under the contracts related to the Receivables.

(f) Keep its place of business or chief executive office (if it has more than one place of business) and the office where it keeps the originals of its

records concerning the Receivables at the address of such Originator listed on the signature page hereto or, upon 30 days' prior written notice to the Administrative Agent, at any other location in a jurisdiction where all UCC financing statements required by the Administrative Agent have been filed.

(g) Comply in all material respects with such Originator's credit and collection policy in regard to each Receivable and any contract related to such Receivable.

(h) Instruct all Obligors to cause all Collections to be either (i) deposited directly into a Lock-Box Account or (ii) remitted to the applicable Originator in such other manner as is utilized in the applicable Originator's normal course of business and has been approved by the Administrative Agent, provided that any such Collections shall be deposited to the appropriate Lock-Box Account within one (1) Business Day after receipt by any Originator. On or prior to the Agreement Date, each Originator shall deliver to the Collection Agent (on behalf of the SPE) a certificate from an authorized officer of the Originator to the effect that (i) the name of the renter of all post office boxes into which Collections may from time to time be mailed have been changed to add the name of the SPE (unless such post office boxes are in the name of the relevant Lock-Box Banks) and (ii) all relevant postmasters have been notified that the Collection Agent is authorized to collect mail delivered to such post office boxes (unless such post office boxes are in the name of the relevant Lock-Box Banks).

(i) File and maintain in effect all filings, and take all such other actions, as may be necessary to protect the validity and perfection of the SPE's ownership interest in Receivables.

(j) Each Originator shall bill all Unbilled Receivables in accordance with its customary practices.

(k) Each Originator shall place on the most recent, and shall take all steps reasonably necessary to ensure that there shall be placed on each subsequent, Receivables Activity Report, the following legend (or the substantive equivalent thereof): "THE RECEIVABLES DESCRIBED HEREIN HAVE BEEN SOLD PURSUANT TO AN AMENDED AND RESTATED PURCHASE AND SALE AGREEMENT, DATED AS OF MARCH 31, 2002, AS MAY BE FURTHER AMENDED, BETWEEN THE CINCINNATI GAS & ELECTRIC COMPANY, PSI ENERGY, INC., AND THE UNION LIGHT, HEAT AND POWER COMPANY, AS ORIGINATORS, AND CINERGY RECEIVABLES COMPANY LLC, AS PURCHASER; AND AN UNDIVIDED, FRACTIONAL SECURITY INTEREST IN THE RECEIVABLES DESCRIBED HEREIN HAS BEEN GRANTED TO JUPITER SECURITIZATION CORPORATION AND WINDMILL FUNDING CORPORATION PURSUANT TO A RECEIVABLES LOAN AGREEMENT, DATED AS OF FEBRUARY 14, 2002, AS AMENDED, AMONG CINERGY RECEIVABLES COMPANY LLC, AS BORROWER, JUPITER SECURITIZATION CORPORATION AND

WINDMILL FUNDING CORPORATION, AS LENDERS, ABN AMRO BANK, N.V. AND BANK ONE, N.A., AS SERVICERS, AND ABN AMRO BANK, N.V., AS ADMINISTATOR."

Section 5.2. Reporting Requirements of the Originators. Until the Collection Date, each Originator will, unless the SPE shall otherwise consent in writing, furnish to the Servicing Agents (or, in the case of (f) below, assist the Collection Agent in furnishing to the Servicing Agents):

(a) the Receivables Activity Report as required under Section 7.4 of the Second Tier Agreement;

(b) promptly and in any event within 5 Business Days after learning thereof, notice of any rate rebates which any Originator may be required by applicable regulatory authorities to provide to its Obligors and any pending proceedings concerning any such rate rebates.

(c) (i) promptly and in any event within 30 Business Days after any Originator or any ERISA Affiliate knows or has reason to know that a "reportable event" (as defined in Section 4043 of ERISA) has occurred with respect to any Plan, a statement of the chief financial officer of such Originator setting forth details as to such reportable event and the action that such Originator or an ERISA Affiliate proposes to take with respect thereto, together with a copy of the notice of such reportable event, if any, given to the PBGC, the Internal Revenue Service or the Department of Labor; (ii) promptly and in any event within 10 Business Days after receipt thereof, a copy of any notice such Originator or any ERISA Affiliate may receive from the PBGC relating to the intention of the PBGC to terminate any Plan or to appoint a trustee to administer any such Plan; (iii) promptly and in any event within 10 Business Days after a filing with the PBGC pursuant to Section 412(n) of the Code of a notice of failure to make a required installment or other payment with respect to a Plan, a statement of the chief financial officer of such Originator setting forth details as to such failure and the action that such Originator or an ERISA Affiliate proposes to take with respect thereto, together with a copy of such notice given to the PBGC; and (iv) promptly and in any event within 30 Business Days after receipt thereof by such Originator or any ERISA Affiliate from the sponsor of a multiemployer plan (as defined in Section 3(37) of ERISA), a copy of each notice received by such Originator or any ERISA Affiliate concerning the imposition of withdrawal liability or a determination that a multiemployer plan is, or is expected to be, terminated or reorganized; and

(d) such other information, documents, records or reports respecting the Sold Property as the SPE, the Administrative Agent, any Servicing Agents or the Lenders may from time to time reasonably request.

Section 5.3. Negative Covenants of the Originators. Until the Collection Date, none of the Originators will, unless the SPE has otherwise consented in writing:

(a) Except as provided herein, sell, assign (by operation of law or otherwise) or otherwise dispose of, or create or suffer to exist any security interest, lien or encumbrance upon or with respect to Receivables, Collections or any Lock-Box Account or assign any right to receive income in respect thereof.

(b) Except pursuant to the applicable Originator's budget/balanced billing payment plan or deferred arrangement payment plan, amend or otherwise modify the terms of any Receivable, or amend, modify or waive any term or condition of any contract related thereto, in each case so as to extend the maturity thereof.

(c) Make any change in the character of its business or its credit and collection policy which would, in either case, be reasonably likely to materially impair the collectibility of any Receivable unless such change is required by applicable regulatory authorities. Any such change will be promptly notified to the Lenders and the Administrative Agent.

(d) Add or terminate any bank as a Lock-Box Bank from those listed on Exhibit H of the Second Tier Agreement, or make any change in its instructions to Obligors regarding payments to be made to such Originator or payments to be made to any Lock-Box Bank, unless the Administrative Agent shall have received notice of such addition, termination or change and, with respect to the addition of any Lock-Box Bank, a Lock-Box Bank Agreement in the form of Exhibit E of the Second Tier Agreement executed by such Originator and such Lock-Box Bank shall have been delivered to the Administrative Agent.

(e) Account for or treat (whether in financial statements or otherwise) the transactions contemplated hereby in any manner other than as sales of the Receivables and Related Rights by the Originators to the SPE.

Section 5.4. Organizational Separateness. Each Originator hereby acknowledges that this Agreement is being entered into in reliance upon the SPE's identity as a legal entity separate from the Originators and their Affiliates, including the Parent. Therefore, from and after the date hereof, the Originators shall take all reasonable steps necessary to make it apparent to third Persons that the SPE is an entity with assets and liabilities distinct from those of the Originators, the Parent and any other Person, and is not a division of any of the Originators, their Affiliates, the Parent, or any other Person. Without limiting the generality of the foregoing and in addition to and consistent with the other covenants set forth herein, the Originators and the Parent shall take such actions as shall be required in order that:

(a) the Originators and the Parent shall not be involved in the day to day management of the SPE;

(b) the Originators and the Parent shall maintain separate corporate records and books of account from the SPE and otherwise will observe corporate formalities and have a separate area from the SPE for their businesses;

(c) the financial statements and books and records of the Originators and the Parent shall be prepared after the date of creation of the SPE to reflect and shall reflect the separate existence of the SPE; *provided,* that the SPE's assets and liabilities may be included in a consolidated financial statement issued by an Affiliate of the SPE; *provided, however,* all financial statements of the Originators or any Affiliate thereof, including the Parent, that are consolidated to include the SPE will contain detailed notes clearly stating that (i) a special purpose corporation exists as a subsidiary of the Parent, (ii) the Originators have sold receivables and other related assets to such special purpose subsidiary that, in turn, has granted an undivided security interest therein to certain financial institutions and other entities and (iii) that the special purpose subsidiary's assets are not available to satisfy the obligations of any Originator or any Affiliate, including the Parent;

(d) except as permitted by the Second-Tier Agreement, (i) each Originator and the Parent shall maintain its assets separately from the assets of the SPE, and (ii) such Originator's assets, and the assets of the Parent and records relating thereto, have not been, are not, and shall not be, commingled with those of the SPE;

(e) all of the SPE's business correspondence and other communications shall be conducted in the SPE's own name and on its own stationery;

(f) neither any Originator nor the Parent shall act as an agent for the SPE, other than ministerial activities of Originators in collecting Receivables and activities of CG&E in its capacity as the Collection Agent, and in connection therewith, CG&E shall present itself to the public as an agent for the SPE and a legal entity separate from the SPE;

(g) neither any Originator nor the Parent shall conduct any of the business of the SPE in its own name;

(h) neither any Originator nor the Parent shall pay any liabilities of the SPE out of its own funds or assets;

(i) each Originator and the Parent shall maintain an arm's-length relationship with the SPE;

(j) neither any Originator nor the Parent shall assume or guarantee or become obligated for the debts of the SPE or hold out its credit as being available to satisfy the obligations of the SPE;

(k) neither any Originator nor the Parent shall acquire obligations of the SPE;

(l) each Originator and the Parent shall allocate fairly and reasonably overhead or other expenses that are properly shared with the SPE, including, without limitation, shared office space;

(m) each Originator and the Parent shall identify and hold itself out as a separate and distinct entity from the SPE;

(n) each Originator and the Parent shall correct any known misunderstanding respecting its separate identity from the SPE;

(o) neither any Originator nor the Parent shall enter into, or be a party to, any transaction with the SPE, except in the ordinary course of its business and on terms which are intrinsically fair and not less favorable to it than would be obtained in a comparable arm's-length transaction with an unrelated third party; and

(p) neither any Originator nor the Parent shall pay the salaries of the SPE's employees, if any.

The provisions of this Section shall survive any termination of this Agreement for one year and one day after the Termination Date.

Section 6. Termination of Purchases.

Section 6.1. Voluntary Termination. The purchase and sale of Receivables pursuant to this Agreement may be terminated by any Originator on a date certain designated by that Originator in writing (the *"Termination Date"*) which shall not be less than five (5) Business Days' after such written notice is provided to the other parties.

Section *6.2. Automatic Termination.* The purchase and sale of Receivables pursuant to this Agreement shall automatically terminate upon the occurrence of a Termination Event, and the Termination Date shall be deemed to have occurred upon the occurrence of such event.

Section 7. Indemnification.

Section 7.1. Indemnification by Originators of SPE, Etc. Without limiting any other rights which the SPE and its officers, directors, employees, and agents,

(collectively, the *"Indemnified Parties"*) may have hereunder or under applicable law, each Originator, jointly and severally, hereby indemnifies such parties and holds them harmless from and against any and all damages, losses, claims, liabilities and related costs and expenses, including reasonable attorneys' fees and disbursements (collectively, *"Claims"*) incurred by any of them arising out of or resulting from the failure of such Originator to perform its obligations under this Agreement or arising out of the claims asserted against an Indemnified Party relating to the transactions contemplated herein or in the Second Tier Agreement or the use of proceeds thereof or therefrom, excluding, however, (i) Claims to the extent resulting from gross negligence or willful misconduct on the part of such Indemnified Party (*"Excluded Losses"*), (ii) recourse with respect to any Receivable to the extent that such Receivable is uncollectible on account of insolvency, bankruptcy or lack of creditworthiness of the related Obligor (except as otherwise specifically provided under this Agreement) and (iii) any tax based upon or measured by net income property, or gross receipts. Without limiting the foregoing, each Originator shall indemnify each Indemnified Party for Claims relating to or resulting from:

(a) the reliance by an Indemnified Party on any representation or warranty made by any Originator (whether as a Originator, Collection Agent or otherwise) (or any of their officers) under or in connection with this Agreement or any Sale Document, which was incorrect in any material respect when made;

(b) the failure by any Originator to comply with any covenant set forth in this Agreement or any other Sale Document, whether as Originator, Collection Agent or otherwise;

(c) the failure to vest and maintain in the SPE, legal and equitable title to, and ownership of, the Receivables, free and clear of any security interest, lien, claim or encumbrance;

(d) the failure to timely file financing statements or other similar instruments or documents under the UCC of any applicable jurisdiction or other applicable laws with respect to any Receivables, whether at the time of a purchase hereunder or otherwise;

(e) except as expressly provided herein, the return or transfer by the Collection Agent of any portion of Collections to any Originator or any other person for any reason whatsoever;

(f) any dispute, claim, offset or defense of any Obligor to the payment of any Receivable attributable to the action or inaction of an Originator (including a defense based on such Receivables or the related contracts not being a legal, valid and binding obligation of such Obligor enforceable against it in accordance with its terms), or any other claim resulting from the sale, use, operation or ownership of or defects in or breaches of warranties with respect to, the

merchandise or services relating to such Receivable or the furnishing or failure to furnish such merchandise or services;

(g) any Originator's failure to pay when due any taxes (including sales, excise or personal property taxes) payable in connection with the Receivables;

(h) the commingling of Collections with other funds of any Originator;

(i) the failure by any Originator to comply in any material respect with any applicable law, rule or regulation with respect to any Receivable, or the nonconformity in any material respect of any Receivable with any such applicable law, rule or regulation;

(j) the failure of any third party to which Collections are remitted to transfer such Collections to the applicable Originator; or

(k) for any reason, the invoices representing previously Unbilled Receivables are less than the amount of such Unbilled Receivables included as Eligible Receivables under the Second Tier Agreement.

If and to the extent that the foregoing undertaking may be unenforceable for any reason, each Originator hereby agrees to make the maximum contribution to the payment of the amounts indemnified against in this Section which is permissible under applicable law.

Section 8. Miscellaneous.

Section 8.1. Amendments, Waivers, Etc. No amendment of this Agreement or waiver of any provision hereof or consent to any departure by either party therefrom shall be effective without the written consent of the party that is sought to be bound. Any such waiver or consent shall be effective only in the specific instance given. No failure or delay on the part of either party to exercise, and no delay in exercising, any right hereunder shall operate as a waiver thereof; nor shall any single or partial exercise of any right hereunder preclude any other or further exercise thereof or the exercise of any other right. The remedies herein provided are cumulative and not exclusive of any remedies provided by law. Each Originator agrees that the Lenders may rely upon the terms of this Agreement, and that the terms of this Agreement may not be amended, nor any material waiver of those terms be granted, without the consent of the Administrative Agent; *provided* that such Originator and the SPE may agree to an adjustment of the Purchase Price for any Receivable originated by such Originator without the consent of the Administrative Agent provided that the Purchase Price paid for such Receivable shall be an amount not less than adequate consideration that represents fair value for such Receivable.

Section 8.2. Assignment of Receivables Purchase Agreement. Each Originator hereby acknowledges that on the date hereof the SPE has collaterally assigned for

security purposes all of its right, title and interest in, to and under this Agreement to the Administrative Agent for the benefit of the Lenders pursuant to the Second Tier Agreement and that the Administrative Agent and the Lenders are third party beneficiaries hereof. Each Originator hereby further acknowledges that after the occurrence and during the continuation of a Termination Event all provisions of this Agreement inuring to the benefit of the SPE shall inure to the benefit of the Administrative Agent and the Lenders, including the enforcement of any provision hereof to the extent set forth in the Second Tier Agreement, but that neither the Administrative Agent nor the Lenders shall have any obligations or duties under this Agreement. No purchases shall take place hereunder at any time that the Administrative Agent has exercised its right to enforce the SPE's rights hereunder pursuant to Section 3.4(b) of the Second Tier Agreement. Each Originator hereby further acknowledges that the execution and performance of this Agreement are conditions precedent for the Administrative Agent and the Lenders to enter into the Second Tier Agreement and that the agreement of the Administrative Agent and Lenders to enter into the Second Tier Agreement will directly or indirectly benefit such Originator and constitutes good and valuable consideration for the rights and remedies of the Administrative Agent and the Lenders with respect hereto.

Section 8.3. Binding Effect; Assignment. This Agreement shall be binding upon and inure to the benefit of the parties hereto and their respective successors and assigns and shall also, to the extent provided herein, inure to the benefit of the parties to the Second Tier Agreement. Each Originator acknowledges that SPE's rights under this Agreement are being assigned to the Administrative Agent under the Second Tier Agreement and consents to such assignment and to the exercise of those rights directly by the Administrative Agent, to the extent permitted by the Second Tier Agreement.

Section 8.4. Survival. The rights and remedies with respect to any breach of any representation and warranty made by an Originator or SPE pursuant to Section 4 and the indemnification provisions of Section 7 shall survive any termination of this Agreement.

Section 8.5. Costs, Expenses and Taxes. In addition to the obligations of the Originators under Section 7, each party (the Originators being one party and the SPE the other party) hereto agrees to pay on demand all costs and expenses incurred by the other party and its assigns (other than Excluded Losses) in connection with the enforcement of, or any actual or claimed breach of, this Agreement, including the reasonable fees and expenses of counsel to any of such Persons incurred in connection with any of the foregoing or in advising such Persons as to their respective rights and remedies under this Agreement in connection with any of the foregoing. Each Originator, jointly and severally, also agrees to pay on demand all stamp and other taxes and fees payable or determined to be payable in connection with the execution, delivery, filing, and recording of this Agreement.

Section 8.6. Execution in Counterparts; Integration. This Agreement may be executed in any number of counterparts and by the different parties in separate counterparts, each of which when so executed shall be deemed to be an original and all of which when taken together shall constitute one and the same Agreement.

Section 8.7. Govering Law; Submission to Jurisdiction. THIS AGREEMENT SHALL BE GOVERNED BY, AND CONSTRUED IN ACCORDANCE WITH, THE INTERNAL LAWS (AND NOT THE LAW OF CONFLICTS) OF THE STATE OF OHIO. EACH ORIGINATOR HEREBY SUBMITS TO THE NONEXCLUSIVE JURISDICTION OF THE UNITED STATES DISTRICT COURT FOR THE SOUTHERN DISTRICT OF OHIO AND OF ANY OHIO STATE COURT SITTING IN CINCINNATI, OHIO FOR PURPOSES OF ALL LEGAL PROCEEDINGS ARISING OUT OF, OR RELATING TO, THE SALE DOCUMENTS OR THE TRANSACTIONS CONTEMPLATED THEREBY. EACH ORIGINATOR HEREBY IRREVOCABLY WAIVES, TO THE FULLEST EXTENT PERMITTED BY LAW, ANY OBJECTION IT MAY NOW OR HEREAFTER HAVE TO THE VENUE OF ANY SUCH PROCEEDING AND ANY CLAIM THAT ANY SUCH PROCEEDING HAS BEEN BROUGHT IN AN INCONVENIENT FORUM. NOTHING IN THIS SECTION 8.7 SHALL AFFECT THE RIGHT OF THE ADMINISTRATIVE AGENT OR THE LENDERS TO BRING ANY ACTION OR PROCEEDING AGAINST AN ORIGINATOR OR ITS PROPERTY IN THE COURTS OF OTHER JURISDICTIONS.

Section 8.8. No Proceedings. Each Originator agrees, for the benefit of the parties to the Second Tier Agreement, that it will not institute against the SPE, or join any other Person in instituting against the SPE, any proceeding of a type referred to in Section 3.1.1(a)(iv) of this Agreement until one year and one day after no investment, loan or commitment is outstanding under the Second Tier Agreement.

Section 8.9. [Intentionally Omitted].

Section 8.10. Notices. Unless otherwise specified, all notices and other communications hereunder shall be in writing (including by telecopier or other facsimile communication), given to the appropriate Person at its address or telecopy number set forth in the Second Tier Agreement or at such other address or telecopy number as such Person may specify, and effective when received at the address specified by such Person.

Section 8.11. Entire Agreement. This Agreement constitutes the entire understanding of the parties hereto concerning the subject matter hereof. Any previous or contemporaneous agreements, whether written or oral, concerning such matters are superseded hereby.

IN WITNESS WHEREOF, the parties have caused this Agreement to be executed by their respective officers thereunto duly authorized, as of the date first above written.

THE CINCINNATI GAS & ELECTRIC COMPANY, as Originator and Collection Agent

By: Wendy L. Aumiller
Name: Wendy L. Aumiller
Title: Acting Treasurer

PSI ENERGY, INC., as Originator

By: Wendy L. Aumiller
Name: Wendy L. Aumiller
Title: Acting Treasurer

THE UNION LIGHT, HEAT AND POWER COMPANY, as Originator

By: Wendy L. Aumiller
Name: Wendy L. Aumiller
Title: Acting Treasurer

CINERGY RECEIVABLES COMPANY LLC, as the SPE

By: Charles J. Winger
Name: Charles J. Winger
Title: President

CINERGY CORP., as the Parent, with respect to Section 5.4 of the Agreement only

By: Wendy L. Aumiller
Name: Wendy L. Aumiller
Title: Acting Treasurer

Exhibit A

Locations of Records and Chief Executive Offices

A. The Cincinnati Gas & Electric Company

1. Location of Chief Executive Office:

   139 East Fourth Street
   Cincinnati, Ohio 45202

2. Location of Books and Records:

   139 East Fourth Street
   Cincinnati, Ohio 45202

B. PSI Energy, Inc.

1. Location of Chief Executive Office:

   1000 East Main Street
   Plainfield, Indiana 46168

2. Location of Books and Records:

   1000 East Main Street
   Plainfield, Indiana 46168

C. The Union Light, Heat and Power Company

1. Location of Chief Executive Office:

   139 East Fourth Street
   Cincinnati, Ohio 45202

2. Location of Books and Records:

   139 East Fourth Street
   Cincinnati, Ohio 45202

   107 Brent Spence Square
   Covington, Kentucky 41011

AMENDMENT TO PURCHASE AND SALE AGREEMENT

THIS AMENDMENT (this *"Amendment"*), effective as of May 30, 2003, is entered into by and among The Cincinnati Gas & Electric Company, an Ohio corporation (*"CG&E"*), PSI Energy Inc., an Indiana corporation ("PSI") and The Union Light, Heat and Power Company, a Kentucky corporation (*"ULH&P"*) (each an *"Originator"* and collectively, the *"Originators"*), and Cinergy Receivables Company LLC, a Delaware limited liability company (the *"SPE"*), and pertains to that certain Amended and Restated Purchase and Sale Agreement, dated as of March 31, 2002, by and among the parties hereto (the *"Agreement"*). Capitalized terms used and not otherwise defined herein are used with the meanings attributed thereto in the Agreement.

WITNESSETH:

WHEREAS, the SPE and the Originators wish to add certain definitions to the Agreement.

NOW, THEREFORE, in consideration of the premises and the other mutual covenants herein contained, and for other good and valuable consideration, the receipt and sufficiency of which is hereby acknowledged, the parties hereto agree as follows:

1. Amendment. From and after the date hereof, the following definitions are hereby added to Section 1.1:

"Affiliate" means, when used with respect to any Person, any other Person controlling or controlled by or under common control with such Person. As used in this definition, "control" (including its correlative meanings "controlled by" and "under common control with") shall mean possession, directly or indirectly, of power to direct or cause the direction of the management or policies of a Person, whether through ownership of voting securities by contract or otherwise.

"Affiliated Obligor" means an Obligor that is an Affiliate of an Originator or the SPE or that is an entity that would be accounted for by an Originator, the SPE or any Affiliate of an Originator or the SPE under the equity method of accounting under U.S. generally accepted accounting principles.

"Obligor" means any corporation, partnership, person or any other party which is obligated to make payment on a Receivable.

"Person" means any individual, partnership, corporation (including a business trust), joint stock company, trust, unincorporated organization or a government or any department or agency or instrumentality thereof.

"Purchase Price" means, with respect to each Purchase under the Agreement, the product obtained by multiplying (a) the Receivables originated during the calendar month by (b) one minus the Required Discount calculated as of the penultimate month-end preceding that calendar month. Notwithstanding the discussion in (b), for purposes of the

Required Discount calculation, the Prime Rate used shall be as of the month-end immediately preceding the calendar month.

"Prime Rate" is defined in Section 5.3 of the Second Tier Agreement.

"Receivable" means the obligation of an Obligor (other than an Affiliated Obligor) to pay an Originator for merchandise sold or services rendered by an Originator in a retail transaction, and includes the rights of the applicable Originator to payment of any interest or finance charges, and in the contracts relating to such Receivable, all security interests, guaranties and property securing or supporting payment of such Receivable, all books and records relating to the Receivable and all proceeds of the foregoing, but "Receivable" shall not include any obligation of an Obligor to pay for merchandise sold or services rendered on a wholesale basis by an Originator. A "retail transaction" is one (i) (a) in which the merchandise sold or the services rendered are sold or rendered to a residential, commercial, industrial, public street and highway lighting, or public authority customer or successor type of customer to the aforementioned customer, or in which Dayton Power and Light, or its successor or Columbus Southern Power, or (b) which resulted in a receivable of CG&E which arose from the joint ownership arrangements between and/or among CG&E, Dayton Power & Light Co. and/or Columbus Southern Power Co. relating to certain jointly owned generating stations), and (ii) which does not result in the customer being obliged to pay for such merchandise or services under a Percentage of Increase Payment Plan.

"Required Discount" means, as measured each month end, an amount for each Originator which is equal to:

$$1 \text{ minus } \frac{(1-B+L-C)}{1+(D \times T)}$$

where: B = the three year weighted average net charge-off percentage, which is calculated as 12 months of net charge-offs divided by 9 month lagging 12 months of billings. '*Net Charge-offs*' is charge-offs less collections. For PSI, the most recent year is weighted 50%, the year prior is weighted 33.33%, and the oldest year is weighted 16.67%. For CG&E and ULH&P, the most recent year is weighted 33.34%, the year prior is weighted 33.33%, and the oldest year is weighted 33.33%.

L = the three year weighted average late charges percentage, which is calculated as 12 months of late charges received divided by 12 months of billings. For PSI, the most recent year is weighted 50%, the year prior is weighted 33.33%, and the oldest year is weighted 16.67%. For CG&E and ULH&P, the most recent year is weighted 33.34%, the year prior is weighted 33.33%, and the oldest year is weighted 33.33%.

C = collection fee is .25%

D = Prime Rate plus .25%

T = the three year weighted average turnover rate, which is calculated as (i) the month-end balance of Receivables divided (ii) by that month's originated receivables times 12. That percentage is calculated for the most recent 36 months and averaged over that period. For PSI, the most recent year is weighted 50%, the year prior weighted 33.3%, and the oldest year weighted 16.67%. For CG&E and ULH&P, the most recent year is weighted 33.34%, the year prior is weighted 33.33%, and the oldest year is weighted 33.33%."

2. Effectiveness. This Amendment shall become effective as of the date first above written upon delivery of counterparts hereof duly executed by each of the parties hereto.

3. Continuing Effect. Except as expressly amended above, the Agreement remains unaltered and in full force and effect and is hereby ratified and confirmed.

4. Binding Effect. This Amendment shall become effective when it shall have been executed and delivered by each of the parties hereto and thereafter shall be binding upon and inure to the benefit of the parties and their respective successors and permitted assigns.

5. **GOVERNING LAW**. THIS AGREEMENT SHALL BE GOVERNED BY, AND CONSTRUED IN ACCORDANCE WITH, THE INTERNAL LAWS (AND NOT THE LAW OF CONFLICTS) OF THE STATE OF OHIO.

6. **Counterparts**. This Amendment may be executed in any number of counterparts, each of which when so executed shall be deemed to be an original and all of which when taken together shall constitute one and the same agreement. Delivery of an executed counterpart of a signature page to this Amendment by facsimile shall be effective as delivery of a manually executed counterpart of this Amendment.

[signature pages begin on next page]

IN WITNESS WHEREOF, the parties have caused this Amendment to be duly executed and delivered as of the day and year first above written.

THE CINCINNATI GAS & ELECTRIC COMPANY,
as Originator and Collection Agent

By: Wendy L. Aumiller
Wendy L. Aumiller
Treasurer

PSI ENERGY, INC., as Originator

By: Wendy L. Aumiller
Wendy L. Aumiller
Treasurer

THE UNION LIGHT, HEAT AND POWER
COMPANY, as Originator

By: Wendy L. Aumiller
Wendy L. Aumiller
Treasurer

CINERGY RECEIVABLES COMPANY LLC,
as the SPE

By: Christopher J. Vogt
Christopher J. Vogt
Treasurer

CINERGY CORP, as the Parent, with respect to
Section 5.4 of the Agreement only

By: Wendy L. Aumiller
Wendy L. Aumiller
Treasurer

SECOND AMENDMENT TO PURCHASE AND SALE AGREEMENT

THIS SECOND AMENDMENT TO PURCHASE AND SALE AGREEMENT (this *"Amendment"*), effective as of January 1, 2004, is entered into by and among The Cincinnati Gas & Electric Company, an Ohio corporation (*"CG&E"*), PSI Energy Inc., an Indiana corporation ("PSI") and The Union Light, Heat and Power Company, a Kentucky corporation (*"ULH&P"*) (each an *"Originator"* and collectively, the *"Originators"*), and Cinergy Receivables Company LLC, a Delaware limited liability company (the *"SPE"*), and pertains to that certain Amended and Restated Purchase and Sale Agreement, dated as of March 31, 2002, as previously amended, by and among the parties hereto (the *"Agreement"*). Capitalized terms used and not otherwise defined herein are used with the meanings attributed thereto in the Agreement.

WITNESSETH:

WHEREAS, the SPE and the Originators wish to add and amend certain definitions to the Agreement.

NOW, THEREFORE, in consideration of the premises and the other mutual covenants herein contained, and for other good and valuable consideration, the receipt and sufficiency of which is hereby acknowledged, the parties hereto agree as follows:

1. New and Amended Definitions. From and after the effective date, the following definition of "LIBOR" is hereby added to Section 1.1 of the Agreement and the definition of "Required Discount" in Section 1.1 of the Agreement is amended as set forth below:

"LIBOR" stands for "London Interbank Offered Rate" and is the rate of interest at which banks borrow funds from other banks, in marketable size, in the London interbank market. For purposes of this Agreement "LIBOR" specifically means the interest rate per annum (rounded upwards, if necessary, to the next higher one hundred-thousandth of a percentage point) for deposits in U.S. dollars for a period of one month as of the first business day of each calendar month, which is accessed and determined by means of a Bloomberg terminal (a subscription service of Bloomberg Financial Markets) by typing in and searching for "BBAM" using the search tool and then selecting the heading "Official BBA LIBOR Fixings" (or any successor page or successor service that displays the British Bankers' Association Interest Settlement Rates for dollar deposits).

"Required Discount" means, as measured each month end, an amount for each Originator which is equal to:

$$1 \text{ minus } \frac{(1-B+L-C)}{1+(D \times T)}$$

where: B = the three year weighted average net charge-off percentage, which is calculated as 12 months of net charge-offs divided by 9 month lagging 12 months of billings. '*Net Charge-offs*' is charge-offs less collections. For PSI, the most recent year is weighted 50%, the year prior is weighted 33.33%, and the oldest year is weighted 16.67%. For CG&E and ULH&P, the most recent year is weighted 33.34%, the year prior is weighted 33.33%, and the oldest year is weighted 33.33%.

L = the three year weighted average late charges percentage, which is calculated as 12 months of late charges received divided by 12 months of billings. For PSI, the most recent year is weighted 50%, the year prior is weighted 33.33%, and the oldest year is weighted 16.67%. For CG&E and ULH&P, the most recent year is weighted 33.34%, the year prior is weighted 33.33%, and the oldest year is weighted 33.33%.

C = collection fee is .25%

D = 1- month LIBOR + 2.39%

T = the three year weighted average turnover rate, which is calculated as (i) the month-end balance of Receivables divided (ii) by that month's originated receivables times 12. That percentage is calculated for the most recent 36 months and averaged over that period. For PSI, the most recent year is weighted 50%, the year prior weighted 33.3%, and the oldest year weighted 16.67%. For CG&E and ULH&P, the most recent year is weighted 33.34%, the year prior is weighted 33.33%, and the oldest year is weighted 33.33%.

2. Effectiveness. This Amendment shall become effective as of the date first above written upon delivery of counterparts hereof duly executed by each of the parties hereto.

3. Continuing Effect. Except as expressly amended above, the Agreement remains unaltered and in full force and effect and is hereby ratified and confirmed.

4. Binding Effect. This Amendment shall become effective when it shall have been executed and delivered by each of the parties hereto and thereafter shall be binding upon and inure to the benefit of the parties and their respective successors and permitted assigns.

5. GOVERNING LAW. THIS AGREEMENT SHALL BE GOVERNED BY, AND CONSTRUED IN ACCORDANCE WITH, THE INTERNAL LAWS (AND NOT THE LAW OF CONFLICTS) OF THE STATE OF OHIO.

6. Counterparts. This Amendment may be executed in any number of counterparts, each of which when so executed shall be deemed to be an original and all of which when taken together shall constitute one and the same agreement. Delivery of an executed counterpart of a signature page to this Amendment by facsimile shall be effective as delivery of a manually executed counterpart of this Amendment.

IN WITNESS WHEREOF, the parties have caused this Amendment to be duly executed and delivered as of the day and year first above written.

THE CINCINNATI GAS & ELECTRIC COMPANY, as Originator and Collection Agent

By: Wendy L. Aumiller
Wendy L. Aumiller
Treasurer

PSI ENERGY, INC., as Originator

By: Wendy L. Aumiller
Wendy L. Aumiller
Treasurer

THE UNION LIGHT, HEAT AND POWER COMPANY, as Originator

By: Wendy L. Aumiller
Wendy L. Aumiller
Treasurer

CINERGY RECEIVABLES COMPANY LLC, as the SPE

By: Christopher J. Vogt
Christopher J. Vogt
Treasurer

CINERGY CORP, as the Parent, consents to this Amendment in its role as a signatory to the Agreement with respect to Section 5.4 only

By: Wendy L. Aumiller
Wendy L. Aumiller
Treasurer

AMENDMENT
Dated as of March 28, 2008
to
AMENDED AND RESTATED PURCHASE AND SALE AGREEMENT
Dated as of March 31, 2002

THIS AMENDMENT (the *"Amendment"*), dated as of March 28, 2008, is entered into among Cinergy Receivables Company LLC (the *"SPE"*), Duke Energy Ohio, Inc. (formerly known as The Cincinnati Gas & Electric Company), Duke Energy Indiana, Inc. (formerly known as PSI Energy, Inc.) and Duke Energy Kentucky, Inc. (formerly known as The Union Light, Heat and Power Company) (each an *"Originator"* and collectively, the *"Originators"*).

This Amendment amends that certain Amended and Restated Purchase and Sale Agreement, dated as of March 31, 2002 (as amended, supplemented or otherwise modified through the date hereof, the *"Purchase Agreement"*), among the SPE and the Originators. Terms used herein and not otherwise defined herein which are defined in the Purchase Agreement shall have the same meaning herein as defined therein.

For good and valuable consideration, the receipt and adequacy of which are hereby acknowledged, the parties hereto hereby agree as follows.

Section 1. Upon execution by the parties hereto in the space provided for that purpose below, the Purchase Agreement shall be, and it hereby is, amended as follows:

(a) Any and all references to *"The Cincinnati Gas & Electric Company"* and *"CG&E"* shall now refer to *"Duke Energy Ohio, Inc."* and *"Duke Ohio,"* respectively.

(b) Any and all references to *"PSI Energy, Inc."* and *"PSI"* shall now refer to *"Duke Energy Indiana, Inc."* and *"Duke Indiana,"* respectively.

(c) Any and all references to *"The Union Light, Heat and Power Company"* and *"ULH&P"* shall now refer to *"Duke Energy Kentucky, Inc."* and *"Duke Kentucky,"* respectively.

(d) A new Section 2.7 is hereby added to the Purchase Agreement as follows:

Section 2.7. Receivables Dispositions. Collection Agent shall periodically generate and deliver to the SPE and each Originator a Bankruptcy Event Notice with respect to the Receivables owned by the SPE. If and so long as no Event of Termination has occurred and is then continuing or would result therefrom each Originator may enter into a Disposition Transaction with the SPE regarding any such Receivables sold by such Originator upon receipt by the SPE of (a) the Bankruptcy Event Notice from the Collection Agent; (b) a disposition offer from such Originator substantially in the form of Exhibit A attached hereto (a *"Disposition Offer"*) which references the Receivables to which such Bankruptcy Event Notice pertains and recites the Disposition Price (as defined

below) therefor (a copy of the Disposition Offer shall be delivered to the Administrative Agent and each Servicing Agent) and (c) cash from such Originator in an amount equal to the fair market value of such Receivables as of the purchase date (the *"Disposition Price"*), whereupon the SPE's right, title and interest in and to such Receivables shall immediately and automatically be sold, assigned, transferred and conveyed by the SPE to the applicable Originator without any further action by the SPE or any other Person. All Disposition Transactions shall be consummated in the order in which the Bankruptcy Event Notices are received by the Collection Agent, without preference or priority given to any Originator, and the SPE shall not enter into a Disposition Transaction if doing so would cause the total face amount of Receivables disposed of pursuant to this Section 2.7 to exceed an amount equal to one percent (1%) of the aggregate sales of the Originators during the most recently completed 12 month period.

(e) The last sentence of Section 3.1(a) is hereby amended in its entirety and as so amended shall read as follows:

The SPE acknowledges that Duke Ohio may delegate to either of Duke Indiana or Duke Kentucky its responsibilities as Collection Agent with respect to Receivables originated by either of Duke Indiana or Duke Kentucky.

(f) A new Exhibit A is hereby added to the Purchase Agreement and shall read as set forth on Exhibit A attached hereto.

Section 2. This Amendment shall become effective only once the Agent has received (i) executed counterparts hereof from each of the parties hereto, (ii) the fully executed Ninth Amendment to Receivables Loan Agreement and (iii) the fully executed Twelfth Amendment to the Back-Stop Agreement.

Section 3. The Purchase Agreement, as amended and supplemented hereby or as contemplated herein, and all rights and powers created thereby and thereunder or under the other Loan Documents and all other documents executed in connection therewith, are in all respects ratified and confirmed. From and after the date hereof, the Purchase Agreement shall be amended and supplemented as herein provided, and, except as so amended and supplemented, the Purchase Agreement, each of the other Loan Documents and all other documents executed in connection therewith shall remain in full force and effect.

Section 4. This Amendment may be executed in two or more counterparts, each of which shall be deemed an original and all of which together shall constitute one instrument. This Amendment shall be become effective when each party hereto shall have received counterparts hereof signed by the other parties hereto. Any counterpart may be executed and transmitted by facsimile or portable document format (.pdf) signature and such facsimile or .pdf signature, upon transmission, shall be deemed an original.

Section 5. This Amendment shall be governed and construed in accordance with the internal laws of the State of Ohio.

IN WITNESS WHEREOF, the parties have caused this Amendment to be executed and delivered by their duly authorized officers as of the date first above written.

CINERGY RECEIVABLES COMPANY LLC, as the SPE

By: _____
Name: Stephen G. De May
Title: President

DUKE ENERGY OHIO, INC. (FORMERLY KNOWN AS THE CINCINNATI GAS & ELECTRIC COMPANY)

By: _____
Name: Michael A. Carrick
Title: Assistant Treasurer

DUKE ENERGY INDIANA, INC. (FORMERLY KNOWN AS PSI ENERGY, INC.)

By: _____
Name: Michael A. Carrick
Title: Assistant Treasurer

DUKE ENERGY KENTUCKY, INC. (FORMERLY KNOWN AS THE UNION, LIGHT, HEAT AND POWER COMPANY)

By: _____
Name: Michael A. Carrick
Title: Assistant Treasurer

EXHIBIT A

DISPOSITION OFFER

ABN AMRO Bank N.V.,
as Administrative Agent and a Servicing Agent
Chicago, Illinois 60661

JPMorgan Chase Bank, N.A.,
as a Servicing Agent
Chicago, Illinois 60670

Cinergy Receivables Company LLC ("SPE")
Cincinnati, Ohio 45202

Re: Amended and Restated Purchase and Sale Agreement dated as of March 31, 2002 (as amended, supplemented or otherwise modified from time to time, the *"Purchase Agreement"*) by and among Duke Energy Ohio, Inc. (formerly known as The Cincinnati Gas & Electric Company), Duke Energy Indiana, Inc. (formerly known as PSI Energy, Inc.), Duke Energy Kentucky, Inc. (formerly known as The Union Light, Heat and Power Company) and Cinergy Receivable Company LLC

Ladies and Gentlemen:

Pursuant to Section 2.7 of the Purchase Agreement, the undersigned Originator hereby offers to purchase from SPE on _____, 20__ (the *"Disposition Date"*) the Receivables (the *"Disposition Receivables"*) listed on Schedule I attached hereto, each of the Obligors for which are the subject of Bankruptcy Event Notices received by the Collection Agent. The aggregate Disposition Price of the Disposition Receivables equals $_____ and the Originator represents and warrants to the addressees that the Disposition Price represents the fair market value of the Disposition Receivables as of the Disposition Date. The Originator shall pay or cause to be paid the Disposition Price to the SPE in immediately available funds on or before the Disposition Date.

Capitalized terms used herein without definition shall have the meanings set forth in the Purchase Agreement.

[NAME OF ORIGINATOR]

By:_____
Name: _____
Title: _____

DUKE ENERGY CORPORATION AND CONSENTING MEMBERS OF ITS CONSOLIDATED GROUP

SECOND AMENDED AGREEMENT FOR FILING CONSOLIDATED INCOME TAX RETURNS AND FOR ALLOCATION OF CONSOLIDATED INCOME TAX LIABILITIES AND BENEFITS

Duke Energy Corporation, a Delaware corporation ("Duke Energy"), and its Members hereby agree as of October 1, 2008 to join annually in the filing of a consolidated Federal income tax return and to allocate the consolidated Federal income tax liabilities and benefits among the Members of the Consolidated Group in accordance with the provisions of this Second Amended Agreement ("Agreement"). The purpose of this Second Amendment, which is effective as of November 1, 2008, is to clarify certain terms, reflect the parties' name changes which occurred since the prior agreement, and revise the list of signatories.

1. DEFINITIONS

"Affiliate" means a corporation, or a company that is treated as a corporation or a company wholly owned by an entity treated as a corporation that is disregarded for purposes of U.S. federal income taxation, other than the common parent which is a Member of the Affiliated Group.

"Affiliated Group" means a group of corporations, or companies that are treated as corporations or disregarded for purposes of U.S. federal income taxation, as defined in Internal Revenue Code ("IRC") section 1504 and the regulations enacted thereunder,

"Consolidated Group" means a group filing (or required to file) consolidated returns for the tax year.

"Consolidated tax" is the aggregate current Federal income tax liability for the Consolidated Group for a tax year shown on the consolidated Federal income tax return, including any adjustments thereto, or as described in section 5 hereof.

"Corporate taxable income" is the positive taxable income of an Affiliate for a tax year, computed as though such company had filed a separate return on the same basis as used in the consolidated return, except that dividend income from Affiliates shall be disregarded, and other intercompany transactions, eliminated in consolidation, shall be given appropriate effect.

"Corporate taxable loss" is the taxable loss of an Affiliate for a tax year, computed as though such entity had filed a Separate return on the same basis as used in the consolidated return, except that dividend income from

Affiliates shall be disregarded, and other intercompany transactions, eliminated in consolidation, shall be given appropriate effect.

"Corporate tax credit" is a negative separate regular tax of an Affiliate for a tax year, equal to the amount by which the consolidated regular tax is reduced by including the Corporate taxable loss of such Affiliate in the consolidated tax return.

"Environmental Tax" The Superfund Amendments and Reauthorization Act of 1986 imposed a new Environmental Tax. The tax was imposed only for the years beginning after December 31, 1986 and before January 1, 1996. The environmental tax was equal to 0.12 percent ($12 of tax per $10,000 of alternative minimum taxable income ("AMTI")) of the excess of AMTI over $2,000,000 and was imposed whether or not the taxpayer was subject to the alternative minimum tax. The Environmental Tax is included in this Agreement for the purposes of any refund on liability with respect to those years when it was in effect.

"Group" means a group of Affiliates as defined in IRC section 1504.

"Separate return" is the tax liability calculated on the taxable income or loss of an Affiliate as though such entity were not a Member of a Consolidated Group.

"Member" is an Affiliate, including a Regulated Business as indicated in section 3 herein, which is part of the Affiliated Group as defined in IRC section 1504 that files consolidated tax returns and agrees to be subject to this Agreement.

These definitions shall apply, as appropriate, in the context of the regular income tax and the Alternative Minimum Tax ("AMT") unless otherwise indicated in the Agreement.

2. FILING OF RETURNS

A U.S. consolidated federal income tax return shall be filed by Duke Energy as the common parent for the tax year ended December 31, 2008, and for each subsequent taxable period for which the Affiliated Group is required or permitted to do so. Each Member of the Affiliated Group consents to the filing by Duke Energy of consolidated federal income tax returns for all taxable periods in which it is eligible to be a member of the Affiliated Group. Duke Energy and each Member of the Affiliated Group agrees to execute and file such consents, elections and other documents, and to take such other action as may be necessary, required or appropriate for the proper filing of such returns. Duke Energy will timely pay the Affiliated Group's federal income tax liability for each taxable year.

3. REGULATED BUSINESSES OPERATING IN LLC OR LP FORM

For purposes of allocating the consolidated federal and state tax liabilities and tax benefits under this Agreement, each business operating as a LLC, or LP that is subject to the rules and regulations of the Federal Energy Regulatory Commission or state utilities commissions (hereinafter, a "Regulated Business") shall be considered a member of the Consolidated Group, and shall be responsible for its allocable share of taxable income (or shall be entitled to a credit for its allocable share of tax loss), as set forth in Sections 4 through 7 hereof. For purposes of this Agreement, the determination of a Regulated Business's allocable share shall be made (i) as if such Regulated Business was a taxable or regarded entity for U.S. federal income tax purposes and (ii) utilizing the separate "taxable income" method.

4. ALLOCATION PROCEDURES FOR CONSOLIDATED FEDERAL INCOME TAXES

For all taxable periods, Duke Energy shall calculate the consolidated federal income tax liability (including, if applicable, alternative minimum tax liability) of the Affiliated Group for the period. The Members agree that their respective shares of the Consolidated tax liability for each year shall be an amount equal to the amount determined under the income method in accordance with IRC 1552(a)(2)[1], with the absorption of tax benefits determined under the percentage method in accordance with Treas. Reg. section 1.1502-33(d)(3)[2], using 100% as the applicable percentage for allocation of any excess of a member's Separate return liability over that determined under the income method. To the extent that the Consolidated Group federal income tax liability is reduced by a loss or tax credit available to it as a result of the inclusion of a Member in the consolidated federal income tax return, Duke Energy shall make a payment or an inter-company account adjustment for the amount of the benefit to the Member as determined in accordance with this section.

To illustrate the above, the Consolidated tax liability shall be allocated among the Members of the Group utilizing the separate return "taxable income" allocation method attributable to each Member, in the following manner:

a) Each Member, which has a Corporate taxable loss, will be entitled to a Corporate tax credit equal to the amount by which the consolidated regular income tax is reduced by including the corporate tax loss of such Member in the consolidated tax return. The Members having

[1] Under IRC 1551(a)(2), tax liability is allocated to the several members of the group on the basis of the percentage of the total tax which the tax of such member if computed on a separate return would bear to the total amount of the taxes for all members of the group so computed.

[2] The percentage method under this regulation "allocates tax liability based on the absorption of tax attributes, without taking into account the ability of any member to subsequently absorb its own tax attributes. The allocation under this method is in addition to the allocation under section 1552."

corporate taxable income will be allocated an amount of regular income tax liability equal to the sum of the consolidated regular tax liability and the Corporate tax credits allocated to the Members having corporate tax losses based on the ratio that each such Member's Corporate taxable income bears to the total corporate taxable income of all Members having Corporate taxable income.

If the aggregate of the Members' Corporate taxable losses are not entirely utilized on the current year's consolidated return, the consolidated carryback or carryforward of such losses to the applicable taxable year(s) will be allocated to each Member having a Corporate taxable loss in the ratio that such Member's separate Corporate tax loss bears to the total corporate tax losses of all Members having Corporate taxable losses.

b) The consolidated Environmental Tax will be allocated among the Members of the Group by applying the procedures set forth in subsection a) above, except that the basis for allocation will be Alternative Minimum Taxable Income ("AMTI") rather than regular corporate taxable income.

c) The consolidated AMT will be allocated among the Members in accordance with the procedures and principles set forth in Proposed Treasury Regulation section 1.1502-55 in the form such Regulation existed on the date on which this Agreement was executed.

d) Tax benefits such as general business credits, foreign tax benefits, or other tax credits shall be apportioned directly to those Members whose investments or contributions generated the credit or benefit.

If the credit or benefit cannot be entirely utilized to offset current Consolidated tax, the consolidated credit carryback or carryforward shall be apportioned to those Members whose investments or contributions generated the credit or benefit in proportion to the relative amounts of credits or benefits generated by each Member.

e) If the amount of Consolidated tax allocated to any Member under this Agreement, as determined above, exceeds the separate return tax of such Member, such excess shall be reallocated among those Members whose allocated tax liability is less than the amount of their respective separate return tax liabilities. The reallocation shall be proportionate to the respective reductions in separate return tax liability of such Members. Any remaining unallocated tax liability shall be assigned to Duke Energy. The term "tax" and "tax liability" used in the subsection shall include regular tax, Environmental Tax and AMT.

5. <u>TAX PAYMENTS AND COLLECTIONS FOR ALLOCATIONS</u>

Duke Energy shall make any calculations on behalf of the Members necessary to comply with the estimated tax provisions of the Internal Revenue Code of 1986 as amended (the "Code"). Based on such calculations, Duke Energy shall charge or refund to the Members appropriate amounts at intervals consistent with the dates indicated by Code section 6655. Duke Energy shall be responsible for paying to the Internal Revenue Service the consolidated current Federal income tax liability.

After filing the consolidated Federal income tax return and allocating the Consolidated tax liability among the Members, Duke Energy and the Members agree to settle between them the difference, if any, between the allocable federal income tax liability as determined under this Agreement and the sum of all payments or inter-company adjustments previously made relating to that tax year by means of actual payments, in the case of Regulated companies, or adjustments to their respective inter-company accounts.

6. ALLOCATION OF STATE TAX LIABILITIES OR BENEFITS

State and local income tax liabilities will be allocated, where appropriate, among Members in accordance with principles similar to those employed in the Agreement for the allocation of consolidated Federal income tax liability.

7. TAX RETURN ADJUSTMENTS

In the event the consolidated tax return is subsequently adjusted by the Internal Revenue Service, state tax authorities, amended returns, claims for refund, or otherwise, such adjustments shall be reflected in the same manner as though they had formed part of the original consolidated return. Interest paid or received, and penalties imposed on account of any adjustment will be allocated to the responsible Member.

8. NEW MEMBERS

If, at any time, a corporation becomes a Member of the affiliated group, the parties hereto agree that such new Member shall become a party to this Agreement by executing a duplicate copy of this Agreement. Unless otherwise specified, such new Member shall have similar rights and obligations of all other Members under this Agreement, effective as of the day they become a member of the Affiliated Group that elects to file a consolidated return.

9. MEMBERS LEAVING THE AFFILIATED GROUP

In the event that any Member of the Affiliated Group at any time leaves the

Group and, under any applicable statutory provision or regulation, that Member is assigned and is deemed to take with it all or a portion of any of the tax attributes (including, but not limited to, net operating losses, credit carryforwards, and Minimum Tax Credit carryforwards) of the Affiliated Group, then, to the extent the amount of the attributes so assigned differs from the amount of such attributes previously allocated to such Member under this Agreement, the leaving Member shall appropriately settle with the Group. Such settlement shall consist of payment on a dollar-for-dollar basis for all differences in credits and, in the case of net operating loss differences, in an amount computed by reference to the highest marginal corporate tax rate. The settlement amounts shall be allocated among the remaining Members of the Group in proportion to the relative level of attributes possessed by each Member and the attributes of each Member shall be adjusted accordingly.

10. SUCCESSORS, ASSIGNS

The provisions and terms of the Agreement shall be binding on and inure to the benefit of any successor or assignee by reason of merger, acquisition of assets, or otherwise, of any of the Members hereto.

11. AMENDMENTS AND TERMINATION

This Agreement may be amended at any time by the written agreement of the parties hereto at the date of such amendment and may be terminated at any time by the written consent of all such parties.

12. GOVERNING LAW

This Agreement is made under the law of the State of Delaware, which law shall be controlling in all matters relating to the interpretation, construction, or enforcement hereof.

13. EFFECTIVE DATE

This Second Amended Agreement is effective for the allocation of the current Federal income tax liabilities of the Members for the consolidated tax year 2008 and all subsequent years until this Second Amended Agreement is revised in writing.

The above procedure for apportioning the consolidated annual net current federal and state tax liabilities and tax benefits of Duke Energy and consenting Members of its Consolidated Group have been agreed to by each of the below listed Members of the Consolidated Group as evidenced by the signature of an officer of each entity.

IN WITNESS WHEREOF, each of the parties hereto has caused this Agreement to be executed on its behalf by an appropriate officer thereunto duly authorized.

DUKE ENERGY CORPORATION

By:_____
Richard G. Beach
Assistant Corporate Secretary

CINERGY CORP.

By:_____
Richard G. Beach
Assistant Secretary

DUKE ENERGY BUSINESS SERVICES LLC

By:_____
Richard G. Beach
Assistant Secretary

DUKE ENERGY OHIO, INC.

By:_____
Richard G. Beach
Assistant Secretary

DUKE ENERGY INDIANA, INC.

By:_____
Richard G. Beach
Assistant Secretary

SOUTH CONSTRUCTION COMPANY, INC.

By:_____
Richard G. Beach
Assistant Secretary

DUKE ENERGY KENTUCKY, INC.

By:_____
Richard G. Beach
Assistant Secretary

DUKE ENERGY CAROLINAS, LLC

By:_____
Richard G. Beach
Assistant Secretary

MIAMI POWER CORPORATION

By:_____
Richard G. Beach
Assistant Secretary

TRI-STATE IMPROVEMENT COMPANY

By:_____
Richard G. Beach
Assistant Secretary

KO TRANSMISSION COMPANY

By:_____
Richard G. Beach
Assistant Secretary

CINERGY INVESTMENTS, INC.

By:_____
George Dwight, II
Assistant Secretary

DUKE ENERGY KENTUCKY, INC.

By:_____
Richard G. Beach
Assistant Secretary

DUKE ENERGY CAROLINAS, LLC

By:_____
Richard G. Beach
Assistant Secretary

MIAMI POWER CORPORATION

By:_____
Richard G. Beach
Assistant Secretary

TRI-STATE IMPROVEMENT COMPANY

By:_____
Richard G. Beach
Assistant Secretary

KO TRANSMISSION COMPANY

By:_____
Richard G. Beach
Assistant Secretary

CINERGY INVESTMENTS, INC.

By:_____
George Dwight II
Assistant Secretary

DUKE COMMUNICATIONS HOLDINGS, INC.
(formerly Cinergy Telecommunications Holding Company, Inc.)

By:_____
Richard G. Beach
Assistant Secretary

CINERGY TECHNOLOGY, INC.

By:_____
Richard G. Beach
Assistant Secretary

CINERGY UK, INC.

By:_____
Richard G. Beach
Assistant Secretary

DUKE ENERGY ENGINEERING, INC.
(formerly Cinergy Engineering, Inc.)

By:_____
George Dwight, II
Assistant Secretary

DUKE ENERGY GENERATION SERVICES HOLDING COMPANY, INC.
(formerly Cinergy Solutions Holding Company, Inc.)

By:_____
George Dwight, II
Assistant Secretary

DUKE-CADENCE, INC.

By:_____
Richard G. Beach
Assistant Secretary

DUKE COMMUNICATIONS HOLDINGS, INC.
(*formerly Cinergy Telecommunications Holding Company, Inc.*)

By:_____
Richard G. Beach
Assistant Secretary

CINERGY TECHNOLOGY, INC.

By:_____
Richard G. Beach
Assistant Secretary

CINERGY UK, INC.

By:_____
Richard G. Beach
Assistant Secretary

DUKE ENERGY ENGINEERING, INC.
(formerly Cinergy Engineering, Inc.)

By:_____
George Dwight, II
Assistant Secretary

DUKE ENERGY GENERATION SERVICES HOLDING COMPANY, INC.
(formerly Cinergy Solutions Holding Company, Inc.)

By:_____
George Dwight, II
Assistant Secretary

DUKE-CADENCE, INC.

By:_____
Richard G. Beach
Assistant Secretary

CINERGY CAPITAL & TRADING, INC.

By:_____
George Dwight, II
Assistant Secretary

CINERGY GLOBAL POWER, INC.

By:_____
Joseph E. Lentz, Jr.
Vice President

CINERGY GLOBAL RESOURCES, INC.

By:_____
Joseph E. Lentz, Jr.
Vice President

DUKE–RELIANT RESOURCES, INC.

By:_____
Richard G. Beach
Assistant Secretary

CINERGY-CENTRUS COMMUNICATIONS, INC.

By:_____
Richard G. Beach
Assistant Secretary

CINERGY-CENTRUS, INC.

By:_____
Richard G. Beach
Assistant Secretary

CINERGY GLOBAL HOLDINGS, INC.

By:_____
James D. Duncan, Jr.
Vice President

CINERGY CAPITAL & TRADING, INC.

By:_____
George Dwight, II
Assistant Secretary

CINERGY GLOBAL POWER, INC.

By:_____
Joseph E. Lentz, Jr.
Vice President

CINERGY GLOBAL RESOURCES, INC.

By:_____
Joseph E. Lentz, Jr.
Vice President

DUKE–RELIANT RESOURCES, INC.

By:_____
Richard G. Beach
Assistant Secretary

CINERGY-CENTRUS COMMUNICATIONS, INC.

By:_____
Richard G. Beach
Assistant Secretary

CINERGY-CENTRUS, INC.

By:_____
Richard G. Beach
Assistant Secretary

CINERGY GLOBAL HOLDINGS, INC.

By:_____
James D. Duncan, Jr.
Vice President

CINERGY CAPITAL & TRADING, INC.

By:_____
George Dwight, II
Assistant Secretary

CINERGY GLOBAL POWER, INC.

By:_____
Joseph E. Lentz, Jr.
Vice President

CINERGY GLOBAL RESOURCES, INC.

By:_____
Joseph E. Lentz, Jr.
Vice President

DUKE–RELIANT RESOURCES, INC.

By:_____
Richard G. Beach
Assistant Secretary

CINERGY-CENTRUS COMMUNICATIONS, INC.

By:_____
Richard G. Beach
Assistant Secretary

CINERGY-CENTRUS, INC.

By:_____
Richard G. Beach
Assistant Secretary

CINERGY GLOBAL HOLDINGS, INC.

By:_____
James D. Duncan, Jr.
Vice President

CINERGY CAPITAL & TRADING, INC.

By:_____
George Dwight, II
Assistant Secretary

CINERGY GLOBAL POWER, INC.

By:_____
Joseph E. Lentz, Jr.
Vice President

CINERGY GLOBAL RESOURCES, INC.

By:_____
Joseph E. Lentz, Jr.
Vice President

DUKE–RELIANT RESOURCES, INC.

By:_____
Richard G. Beach
Assistant Secretary

CINERGY-CENTRUS COMMUNICATIONS, INC.

By:_____
Richard G. Beach
Assistant Secretary

CINERGY-CENTRUS, INC.

By:_____
Richard G. Beach
Assistant Secretary

CINERGY GLOBAL HOLDINGS, INC.

By:_____
James D. Duncan, Jr.
Vice President

CINERGY GLOBAL ELY, INC.

By: James D. Duncan, Jr.
Vice President

DEGS OF TUSCOLA, INC

By:_____
George Dwight, II
Assistant Secretary

DUKE ENERGY ONE, INC.
(formerly Cinergy One, Inc.)

By:_____
Richard G. Beach
Assistant Secretary

CINERGY POWER INVESTMENTS, INC.

By:_____
Joseph E. Lentz, Jr.
Vice President

DUKE ENERGY GENERATION SERVICES, INC.
(formerly Cinergy Solutions, Inc.)

By:_____
George Dwight, II
Assistant Secretary

DUKE TECHNOLOGIES, INC.
(*formerly Cinergy Technologies, Inc.*)

By:_____
Richard G. Beach
Assistant Secretary

CINERGY GLOBAL ELY, INC.

By:_____
James D. Duncan, Jr.
Vice President

DEGS OF TUSCOLA, INC

By:_____
George Dwight, II
Assistant Secretary

DUKE ENERGY ONE, INC.
(formerly Cinergy One, Inc.)

By:_____
Richard G. Beach
Assistant Secretary

CINERGY POWER INVESTMENTS, INC.

By:_____
Joseph E. Lentz, Jr.
Vice President

DUKE ENERGY GENERATION SERVICES, INC.
(formerly Cinergy Solutions, Inc.)

By:_____
George Dwight, II
Assistant Secretary

DUKE TECHNOLOGIES, INC.
(*formerly Cinergy Technologies, Inc.*)

By:_____
Richard G. Beach
Assistant Secretary

CINERGY GLOBAL ELY, INC.

By:_____
James D. Duncan, Jr.
Vice President

DEGS OF TUSCOLA, INC

By:_____
George Dwight, II
Assistant Secretary

DUKE ENERGY ONE, INC.
(formerly Cinergy One, Inc.)

By:_____
Richard G. Beach
Assistant Secretary

CINERGY POWER INVESTMENTS, INC.

By:_____
Joseph E. Lentz, Jr.
Vice President

DUKE ENERGY GENERATION SERVICES, INC.
(formerly Cinergy Solutions, Inc.)

By:_____
George Dwight, II
Assistant Secretary

DUKE TECHNOLOGIES, INC.
(*formerly Cinergy Technologies, Inc.*)

By:_____
Richard G. Beach
Assistant Secretary

CINERGY GLOBAL ELY, INC.

By:_____
James D. Duncan, Jr.
Vice President

DEGS OF TUSCOLA, INC

By:_____
George Dwight, II
Assistant Secretary

DUKE ENERGY ONE, INC.
(formerly Cinergy One, Inc.)

By:_____
Richard G. Beach
Assistant Secretary

CINERGY POWER INVESTMENTS, INC.

By:_____
Joseph E. Lentz, Jr.
Vice President

DUKE ENERGY GENERATION SERVICES, INC.
(formerly Cinergy Solutions, Inc.)

By:_____
George Dwight, II
Assistant Secretary

DUKE TECHNOLOGIES, INC.
(*formerly Cinergy Technologies, Inc.*)

By:_____
Richard G. Beach
Assistant Secretary

CINERGY TWO, INC.

By:_____
Richard G. Beach
Assistant Secretary

CINERGY WHOLESALE ENERGY, INC.

By:_____
Joseph E. Lentz, Jr.
Vice President

DUKETEC, LLC
(*formerly CinTec LLC*)

By:_____
Richard G. Beach
Assistant Secretary

CINERGY RETAIL POWER LIMITED, INC.

By:_____
Richard G. Beach
Assistant Secretary

CINERGY RETAIL POWER GENERAL, INC.

By:_____
Joseph E. Lentz, Jr.
Vice President

DEGS OF PHILADELPHIA, LLC

By:_____
George Dwight, II
Assistant Secretary

CINFUEL RESOURCES, INC.

By:_____
George Dwight, II
Assistant Secretary

CINERGY TWO, INC.

By:_____
Richard G. Beach
Assistant Secretary

CINERGY WHOLESALE ENERGY, INC.

By:_____
Joseph E. Lentz, Jr.
Vice President

DUKETEC, LLC
(*formerly CinTec LLC*)

By:_____
Richard G. Beach
Assistant Secretary

CINERGY RETAIL POWER LIMITED, INC.

By:_____
Richard G. Beach
Assistant Secretary

CINERGY RETAIL POWER GENERAL, INC.

By:_____
Joseph E. Lentz, Jr.
Vice President

DEGS OF PHILADELPHIA, LLC

By:_____
George Dwight, II
Assistant Secretary

CINFUEL RESOURCES, INC.

By:_____
George Dwight, II
Assistant Secretary

CINERGY TWO, INC.

By:_____
Richard G. Beach
Assistant Secretary

CINERGY WHOLESALE ENERGY, INC.

By:_____
Joseph E. Lentz, Jr.
Vice President

DUKETEC, LLC
(*formerly CinTec LLC*)

By:_____
Richard G. Beach
Assistant Secretary

CINERGY RETAIL POWER LIMITED, INC.

By:_____
Richard G. Beach
Assistant Secretary

CINERGY RETAIL POWER GENERAL, INC.

By:_____
Joseph E. Lentz, Jr.
Vice President

DEGS OF PHILADELPHIA, LLC

By:_____
George Dwight, II
Assistant Secretary

CINFUEL RESOURCES, INC.

By:_____
George Dwight, II
Assistant Secretary

CINERGY CLIMATE CHANGE INVESTMENTS, LLC

By:_____
Richard G. Beach
Assistant Secretary

DUKE ENERGY RETAIL SALES, LLC
(formerly Cinergy Retail Sales, LLC)

By:_____
Richard G. Beach
Assistant Secretary

DEGS OF SAN DIEGO, INC.
(formerly Cinergy Solutions of San Diego ,Inc.)

By:_____
George Dwight, II
Assistant Secretary

CINERGY SOLUTIONS UTILITY, INC.

By:_____
Richard G. Beach
Assistant Secretary

BISON INSURANCE COMPANY LIMITED

By:_____
Edwin Keith Bone
Senior Vice President

CALDWELL POWER COMPANY

By:_____
Richard G. Beach
Assistant Secretary

CINERGY CLIMATE CHANGE INVESTMENTS, LLC

By:_____
Richard G. Beach
Assistant Secretary

DUKE ENERGY RETAIL SALES, LLC
(formerly Cinergy Retail Sales, LLC)

By:_____
Richard G. Beach
Assistant Secretary

DEGS OF SAN DIEGO, INC.
(formerly Cinergy Solutions of San Diego ,Inc.)

By:_____
George Dwight, II
Assistant Secretary

CINERGY SOLUTIONS UTILITY, INC.

By:_____
Richard G. Beach
Assistant Secretary

BISON INSURANCE COMPANY LIMITED

By:_____
Edwin Keith Bone
Senior Vice President

CALDWELL POWER COMPANY

By:_____
Richard G. Beach
Assistant Secretary

CINERGY CLIMATE CHANGE INVESTMENTS, LLC

By:_____
Richard G. Beach
Assistant Secretary

DUKE ENERGY RETAIL SALES, LLC
(formerly Cinergy Retail Sales, LLC)

By:_____
Richard G. Beach
Assistant Secretary

DEGS OF SAN DIEGO, INC.
(formerly Cinergy Solutions of San Diego ,Inc.)

By:_____
George Dwight, II
Assistant Secretary

CINERGY SOLUTIONS UTILITY, INC.

By:_____
Richard G. Beach
Assistant Secretary

BISON INSURANCE COMPANY LIMITED

By:_____
George M. Brown
President and Chief Executive Officer

CALDWELL POWER COMPANY

By:_____
Richard G. Beach
Assistant Secretary

CATAWBA MANUFACTURING AND ELECTRIC POWER COMPANY

By:_____
Richard G. Beach
Assistant Secretary

CLAIBORNE ENERGY SERVICES, INC.

By:_____
Richard G. Beach
Assistant Secretary

DE NUCLEAR ENGINEERING, INC.

By:_____
Julia S. Janson
Secretary

DETMI MANAGEMENT, INC.

By:_____
Richard G. Beach
Assistant Secretary

DIXILYN-FIELD DRILLING COMPANY

By:_____
Richard G. Beach
Assistant Secretary

DUKE COMMUNICATION SERVICES, INC.

By:_____
Julia S. Janson
Assistant Secretary

DUKE ENERGY ALLOWANCE MANAGEMENT, LLC

By:_____
Sherwood L. Love
Vice President

CATAWBA MANUFACTURING AND ELECTRIC POWER COMPANY

By:_____
Richard G. Beach
Assistant Secretary

CLAIBORNE ENERGY SERVICES, INC.

By:_____
Richard G. Beach
Assistant Secretary

DE NUCLEAR ENGINEERING, INC.

By:_____
Julia S. Janson
Secretary

DETMI MANAGEMENT, INC.

By:_____
Richard G. Beach
Assistant Secretary

DIXILYN-FIELD DRILLING COMPANY

By: _____
Richard G. Beach
Assistant Secretary

DUKE COMMUNICATION SERVICES, INC.

By:_____
Julia S. Janson
Assistant Secretary

DUKE ENERGY ALLOWANCE MANAGEMENT, LLC

By:_____
Sherwood L. Love
Vice President

CATAWBA MANUFACTURING AND ELECTRIC POWER COMPANY

By:_____
Richard G. Beach
Assistant Secretary

CLAIBORNE ENERGY SERVICES, INC.

By:_____
Richard G. Beach
Assistant Secretary

DE NUCLEAR ENGINEERING, INC.

By:_____
Julia S. Janson
Secretary

DETMI MANAGEMENT, INC.

By:_____
Richard G. Beach
Assistant Secretary

DIXILYN-FIELD DRILLING COMPANY

By: _____
Richard G. Beach
Assistant Secretary

DUKE COMMUNICATION SERVICES, INC.

By:_____
Julia S. Janson
Assistant Secretary

DUKE ENERGY ALLOWANCE MANAGEMENT, LLC

By: SLLove
Sherwood L. Love
Vice President

DUKE ENERGY FOSSIL-HYDRO CALIFORNIA, INC.

By:_____
Richard G. Beach
Assistant Secretary

DUKE ENERGY GLOBAL MARKETS, INC.

By:_____
Richard G. Beach
Assistant Secretary

DUKE ENERGY GROUP HOLDINGS, LLC

By:_____
Javier Gonzalez
Assistant Secretary

DUKE ENERGY MARKETING AMERICA, LLC

By:_____
Greer E. Mendelow
Assistant Secretary

DUKE ENERGY MARKETING CORP.

By:_____
Richard G. Beach
Assistant Secretary

DUKE ENERGY REGISTRATION SERVICES, INC.

By:_____
Julia S. Janson
Secretary

DUKE ENERGY SERVICES, INC.

By:_____
Richard G. Beach
Assistant Secretary

DUKE ENERGY FOSSIL-HYDRO CALIFORNIA, INC.

By:_____
Richard G. Beach
Assistant Secretary

DUKE ENERGY GLOBAL MARKETS, INC.

By:_____
Richard G. Beach
Assistant Secretary

DUKE ENERGY GROUP HOLDINGS, LLC

By: Javier Gonzalez
Javier Gonzalez
Assistant Secretary

DUKE ENERGY MARKETING AMERICA, LLC

By:_____
Greer E. Mendelow
Assistant Secretary

DUKE ENERGY MARKETING CORP.

By:_____
Richard G. Beach
Assistant Secretary

DUKE ENERGY REGISTRATION SERVICES, INC.

By:_____
Julia S. Janson
Secretary

DUKE ENERGY SERVICES, INC.

By:_____
Richard G. Beach
Assistant Secretary

DUKE ENERGY FOSSIL-HYDRO CALIFORNIA, INC.

By:_____
Richard G. Beach
Assistant Secretary

DUKE ENERGY GLOBAL MARKETS, INC.

By:_____
Richard G. Beach
Assistant Secretary

DUKE ENERGY GROUP HOLDINGS, LLC

By:_____
Javier Gonzalez
Assistant Secretary

DUKE ENERGY MARKETING AMERICA, LLC

By:_____
Greer E. Mendelow
Assistant Secretary

DUKE ENERGY MARKETING CORP.

By:_____
Richard G. Beach
Assistant Secretary

DUKE ENERGY REGISTRATION SERVICES, INC.

By:_____
Julia S. Janson
Secretary

DUKE ENERGY SERVICES, INC.

By:_____
Richard G. Beach
Assistant Secretary

DUKE ENERGY FOSSIL-HYDRO CALIFORNIA, INC.

By:_____
Richard G. Beach
Assistant Secretary

DUKE ENERGY GLOBAL MARKETS, INC.

By:_____
Richard G. Beach
Assistant Secretary

DUKE ENERGY GROUP HOLDINGS, LLC

By:_____
Javier Gonzalez
Assistant Secretary

DUKE ENERGY MARKETING AMERICA, LLC

By:_____
Greer E. Mendelow
Assistant Secretary

DUKE ENERGY MARKETING CORP.

By:_____
Richard G. Beach
Assistant Secretary

DUKE ENERGY REGISTRATION SERVICES, INC.

By:_____
Julia S. Janson
Secretary

DUKE ENERGY SERVICES, INC.

By:_____
Richard G. Beach
Assistant Secretary

DUKE ENGINEERING & SERVICES (EUROPE) INC.

By : _____
Richard G. Beach
Assistant Secretary

DUKE PROJECT SERVICES, INC.

By: _____
Richard G. Beach
Assistant Secretary

DUKE VENTURES, LLC

By: _____
Richard G. Beach
Assistant Secretary

EASTOVER LAND COMPANY

By: _____
Richard G. Beach
Assistant Secretary

EASTOVER MINING COMPANY

By: _____
Richard G. Beach
Assistant Secretary

ENERGY PIPELINES INTERNATIONAL COMPANY

By: _____
Richard G. Beach
Assistant Secretary

GREENVILLE GAS AND ELECTRIC LIGHT AND POWER COMPANY

By:_____
Richard G. Beach
Assistant Secretary

MP SUPPLY, INC.

By:_____
Julia S. Janson
Secretary

NORTHSOUTH INSURANCE COMPANY LIMITED

By:_____
Edwin Keith Bone
Senior Vice President

PAN SERVICE COMPANY

By:_____
Richard G. Beach
Assistant Secretary

PANENERGY CORP

By:_____
Richard G. Beach
Assistant Secretary

SOUTHEASTERN ENERGY SERVICES, INC.

By:_____
Steven L. Sheek
Secretary

SOUTHERN POWER COMPANY

By:_____
Richard G. Beach
Assistant Secretary

GREENVILLE GAS AND ELECTRIC LIGHT AND POWER COMPANY

By:_____
Richard G. Beach
Assistant Secretary

MP SUPPLY, INC.

By:_____
Julia S. Janson
Secretary

NORTHSOUTH INSURANCE COMPANY LIMITED

By:_____
Edwin Keith Bone
Senior Vice President

PAN SERVICE COMPANY

By:_____
Richard G. Beach
Assistant Secretary

PANENERGY CORP

By:_____
Richard G. Beach
Assistant Secretary

SOUTHEASTERN ENERGY SERVICES, INC.

By:_____
Steven L. Sheek
Secretary

SOUTHERN POWER COMPANY

By:_____
Richard G. Beach
Assistant Secretary

GREENVILLE GAS AND ELECTRIC LIGHT AND POWER COMPANY

By:_____
Richard G. Beach
Assistant Secretary

MP SUPPLY, INC.

By:_____
Julia S. Janson
Secretary

NORTHSOUTH INSURANCE COMPANY LIMITED

By:_____
George V. Brown
President and Chief Executive Officer

PAN SERVICE COMPANY

By:_____
Richard G. Beach
Assistant Secretary

PANENERGY CORP

By:_____
Richard G. Beach
Assistant Secretary

SOUTHEASTERN ENERGY SERVICES, INC.

By:_____
Steven L. Sheek
Secretary

SOUTHERN POWER COMPANY

By:_____
Richard G. Beach
Assistant Secretary

GREENVILLE GAS AND ELECTRIC LIGHT AND POWER COMPANY

By:_____
Richard G. Beach
Assistant Secretary

MP SUPPLY, INC.

By:_____
Julia S. Janson
Secretary

NORTHSOUTH INSURANCE COMPANY LIMITED

By:_____
Edwin Keith Bone
Senior Vice President

PAN SERVICE COMPANY

By:_____
Richard G. Beach
Assistant Secretary

PANENERGY CORP

By:_____
Richard G. Beach
Assistant Secretary

SOUTHEASTERN ENERGY SERVICES, INC.

By:_____
Steven L. Sheek
Secretary

SOUTHERN POWER COMPANY

By:_____
Richard G. Beach
Assistant Secretary

WESTERN CAROLINA POWER COMPANY

By:_____
Richard G. Beach
Assistant Secretary

DUKE JAVA, INC.

By:_____
Javier Gonzalez
Assistant Secretary

DENA ASSET PARTNERS, L.P.
(by *DENA Partners Holding, LLC, its General Partner*

By:_____
Richard G. Beach
Secretary

DUKENET COMMUNICATIONS, LLC

By:_____
Richard G. Beach
Assistant Secretary

WATEREE POWER COMPANY

By:_____
Richard G. Beach
Assistant Secretary

DEGS BIOGAS, INC.

By:_____
George Dwight, II
Assistant Secretary

DUKE ENERGY TRANSMISSION HOLDING COMPANY, LLC

By:_____
Richard G. Beach
Assistant Secretary

WESTERN CAROLINA POWER COMPANY

By:_____
Richard G. Beach
Assistant Secretary

DUKE JAVA, INC.

By:_____
Javier Gonzalez
Assistant Secretary

DENA ASSET PARTNERS, L.P.
(by *DENA Partners Holding, LLC, its General Partner*

By:_____
Richard G. Beach
Secretary

DUKENET COMMUNICATIONS, LLC

By:_____
Richard G. Beach
Assistant Secretary

WATEREE POWER COMPANY

By:_____
Richard G. Beach
Assistant Secretary

DEGS BIOGAS, INC.

By:_____
George Dwight, II
Assistant Secretary

DUKE ENERGY TRANSMISSION HOLDING COMPANY, LLC

By:_____
Richard G. Beach
Assistant Secretary

WESTERN CAROLINA POWER COMPANY

By:_____
Richard G. Beach
Assistant Secretary

DUKE JAVA, INC.

By:_____
Javier Gonzalez
Assistant Secretary

DENA ASSET PARTNERS, L.P.
(by *DENA Partners Holding, LLC, its General Partner*

By:_____
Richard G. Beach
Secretary

DUKENET COMMUNICATIONS, LLC

By:_____
Richard G. Beach
Assistant Secretary

WATEREE POWER COMPANY

By:_____
Richard G. Beach
Assistant Secretary

DEGS BIOGAS, INC.

By:_____
George Dwight, II
Assistant Secretary

DUKE ENERGY TRANSMISSION HOLDING COMPANY, LLC

By:_____
Richard G. Beach
Assistant Secretary

Catamount Energy Corporation

By: _____ Date: March 5, 2009
Richard G. Beach
Assistant Secretary

Catamount Heartlands Corporation

By: _____ Date: March 5, 2009
Richard G. Beach
Assistant Secretary

Catamount Rumford Corporation

By: _____ Date: March 5, 2009
Richard G. Beach
Assistant Secretary

Catamount Sweetwater Corporation

By: _____ Date: March 5, 2009
Richard G. Beach
Assistant Secretary

CEC UK1 Holding Corporation

By: _____ Date: March 5, 2009
Richard G. Beach
Assistant Secretary

CEC UK2 Holding Corporation

By: _____ Date: March 5, 2009
Richard G. Beach
Assistant Secretary

Duke Energy Corporate Services, Inc.

By: _____ Date: March 5, 2009
Richard G. Beach
Assistant Secretary

Equinox Vermont Corporation

By: _____ Date: March 5, 2009
Richard G. Beach
Assistant Secretary

INTERCOMPANY ASSET TRANSFER AGREEMENT

This **Intercompany Asset Transfer Agreement** (this "Agreement") is made and entered into as of December 22, 2008 (the "Effective Date") by and among Duke Energy Carolinas, LLC, a North Carolina limited liability company ("DE Carolinas"), Duke Energy Ohio, Inc., an Ohio corporation ("DE Ohio"), Duke Energy Indiana, Inc., an Indiana corporation ("DE Indiana"), and Duke Energy Kentucky, Inc., a Kentucky corporation ("DE Kentucky") (collectively the "Operating Companies" and, individually, an "Operating Company").

W I T N E S S E T H:

WHEREAS, Duke Energy Corporation ("Duke Energy") is a Delaware corporation;

WHEREAS, each Operating Company is a subsidiary of Duke Energy and a public utility company;

WHEREAS, in the ordinary course of their businesses, the Operating Companies maintain inventory and other assets for the operation and maintenance of their respective electric utility, and with respect to DE Ohio and DE Kentucky, gas utility, businesses; and

WHEREAS, subject to the terms and conditions herein set forth, and taking into consideration the Operating Companies' utility responsibilities, each Operating Company is willing, upon request from time to time, to transfer Assets, as defined herein, to each other Operating Company, as each shall request from each other.

NOW, THEREFORE, in consideration of the premises and the mutual covenants herein contained, the parties agree as follows:

ARTICLE 1. TRANSFER OF ASSETS

Section 1.1 Transfer. Upon request from one party ("Recipient"), the other party ("Transferor") shall transfer to the Recipient those Assets requested by Recipient, provided that (i) Transferor believes, in its reasonable judgment, that such transfer will not jeopardize Transferor's ability to render electric utility service to its customers consistent with Good Utility Practice and, for DE Carolinas, such a transfer is consistent with the priority of service condition approved by the NCUC by Order dated October 30, 2006, in Docket No. E-7, Sub 810; (ii) the Cost of any shipment of transmission- or generation-related item(s) does not exceed $10,000,000; (iii) DE Carolinas shall not transfer any Asset hereunder in contravention of S.C. Code Ann. § 58-27-1300; (iii) DE Kentucky shall not transfer any Asset hereunder in contravention of KRS 278.218; (iv) DE Carolinas shall not transact with DE Ohio's generation operation under this Agreement and shall not transact with DE Kentucky or DE Indiana for purposes of circumventing or avoiding this prohibition; and (v) DE Carolinas shall not transfer or take receipt of any transmission transformers or other equipment under this Agreement other than transmission-related equipment that may be used on/with transformers within a range of voltages or regardless of voltage. "Assets" means parts inventory, capital spares, equipment and other goods except for the following: coal; natural gas; fuel

oil used for electric power generation; emission allowances; electric power; and environmental control reagents. "Good Utility Practice" means any of the practices, methods and acts engaged in or approved by a significant portion of the electric utility industry in the United States during the relevant time period, or any of the practices, methods and acts which, in the exercise of reasonable judgment in light of the facts known at the time the decision was made, could have been expected to accomplish the desired result at a reasonable cost consistent with good business practices, reliability, safety and expedition. Good Utility Practice is not intended to be limited to the optimum practice, method, or act to the exclusion of all others, but rather includes all acceptable practices, method, or acts generally accepted in the region

Section 1.2 Compensation. Except to the extent otherwise required by Section 482 of the Internal Revenue Code or analogous state tax law, Recipient shall compensate Transferor for any Assets transferred hereunder at Cost; provided however that any transfers of electric generation-related Assets between DE Ohio, on the one hand, and DE Indiana, or DE Kentucky on the other hand, will be priced in accordance with Federal Energy Regulatory Commission's ("FERC") affiliate transaction pricing requirements. Accordingly, generation-related Assets transferred from DE Indiana or DE Kentucky to DE Ohio shall be priced at the greater of Cost or market, and generation-related Assets transferred from DE Ohio to DE Indiana or DE Kentucky shall be priced at no more than market. "Cost" means (i) for items of inventory accounted for in the FERC Uniform System of Accounts account 154 ("Inventory Items"), the average unit price of such Inventory Items as recorded on the books of the Transferor, plus stores, freight, handling, and other applicable costs, and (ii) for assets other than Inventory Items, net book value.

Alternatively, to the extent that an Asset may be transferred under this Agreement, the Transferor and Recipient may agree that the Asset transferred to the Recipient be replaced in kind. In this event, Transferor and Recipient shall agree to the timing of such replacement, and other necessary terms and conditions, and such in-kind replacement shall be deemed a transferred Asset for all purposes hereunder.

Section 1.3 Payment. Each Operating Company shall reasonably cooperate with each other Operating Company to record billings and payments required hereunder in their common accounting systems.

Section 1.4 Delivery; Title and Risk of Loss. The parties shall cooperate in providing transportation equipment necessary to deliver the Assets to the Recipient. Assets will be delivered FOB transportation equipment at the Transferor's location where such Assets reside ("Shipping Point"). All costs of transportation, including the cost of transporting in-kind replacement Assets to Transferor, shall be borne by the Recipient. Title to and risk of loss of the transferred Assets shall pass from the Transferor to the Recipient at the Shipping Point.

ARTICLE 2. WARRANTIES

Section 2.1 Warranties. Each Operating Company, as Transferor, warrants that it will have good and marketable title to the Assets transferred hereunder. Further, each Operating Company, as Transferor, warrants that it shall obtain release of any liens or other encumbrances on the transferred Assets within a reasonable time. ALL ASSETS TRANSFERRED HEREUNDER

ARE BEING SOLD "AS IS, WHERE IS" AND WITHOUT ANY WARRANTY AS TO ITS CONDITION, INCLUDING WITHOUT ANY WARRANTY AS TO MERCHANTABILITY OR FITNESS FOR A PARTICULAR PURPOSE.

Section 2.2 Disclaimer. WITH RESPECT TO ANY ASSETS TRANSFERRED HEREUNDER, EACH OPERATING COMPANY AS TRANSFEROR MAKES NO WARRANTY OR REPRESENTATION OTHER THAN AS SET FORTH IN SECTION 2.1, AND THE PARTIES HERETO HEREBY AGREE THAT NO OTHER WARRANTY, WHETHER STATUTORY, EXPRESS OR IMPLIED (INCLUDING BUT NOT LIMITED TO ALL WARRANTIES OF MERCHANTABILITY AND FITNESS FOR A PARTICULAR PURPOSE AND WARRANTIES ARISING FROM COURSE OF DEALING OR USAGE OF TRADE), SHALL BE APPLICABLE TO SUCH ASSETS. THE PARTIES FURTHER AGREE THAT THE REMEDIES STATED HEREIN ARE EXCLUSIVE AND SHALL CONSTITUTE THE SOLE AND EXCLUSIVE REMEDY OF ANY PARTY HERETO FOR A FAILURE BY ANY OTHER PARTY HERETO TO COMPLY WITH ITS WARRANTY OBLIGATIONS.

ARTICLE 3. INDEMNIFICATION

Section 3.1 Indemnification; Limitation of Liability.

(a) Subject to subparagraph (b) of this Section 3.1, each party (the "Indemnifying Party") shall release, defend, indemnify and hold harmless the other party (the "Indemnified Party"), including any officer, director, employee or agent thereof, from and against, and shall pay the full amount of, any loss, liability, claim, damage, expense (including costs of investigation and defense and reasonable attorneys' fees), whether or not involving a third-party claim, incurred or sustained by or against any such Indemnified Party arising, directly or indirectly, from or in connection with Indemnifying Party's negligence or willful misconduct in the performance of its obligations hereunder.

(b) Notwithstanding any other provision hereof, each party's total liability hereunder with respect to any Assets shall be limited to the amount actually paid to Transferor for such Assets for which the liability arises, and under no circumstances shall Transferor be liable for consequential, incidental, punitive, exemplary or indirect damages, lost profits or other business interruption damages, by statute, in tort or contract, under any indemnity provision or otherwise (it being the intent of the parties that the indemnification obligations in this Agreement shall cover only actual damages and accordingly, without limitation of the foregoing, shall be net of any insurance proceeds actually received in respect of any such damages).

Section 3.2 Procedure for Indemnification. Within 15 business days after receipt by an Indemnified Party of notice of any claim or the commencement of any action, suit, litigation or other proceeding against it (a "Proceeding") with respect to which it is eligible for indemnification hereunder, the Indemnified Party shall notify the Indemnifying Party thereof in writing (it being understood that failure so to notify the Indemnifying Party shall not relieve the latter of its indemnification obligation, unless the Indemnifying Party establishes that defense thereof has been prejudiced by such failure). Thereafter, the Indemnifying Party shall be entitled to participate in

such Proceeding and, at its election upon notice to such Indemnified Party and at its expense, to assume the defense of such Proceeding. Without the prior written consent of such Indemnified Party, Indemnifying Party shall not enter into any settlement of any third-party claim that would lead to liability or create any financial or other obligation on the part of such Indemnified Party for which such Indemnified Party is not entitled to indemnification hereunder. If such Indemnified Party has given timely notice to Indemnifying Party of the commencement of such Proceeding, but Indemnifying Party has not, within 15 business days after receipt of such notice, given notice to Indemnified Party of its election to assume the defense thereof, Indemnifying Party shall be bound by any determination made in such Proceeding or any compromise or settlement made by Indemnified Party. A claim for indemnification for any matter not involving a third-party claim may be asserted by notice from the applicable Indemnified Party to Indemnifying Party.

ARTICLE 4. MISCELLANEOUS

Section 4.1 Amendments. Any amendments to this Agreement shall be in writing executed by each of the parties hereto. To the extent that applicable state law or regulation or other binding obligation requires that any such amendment be filed with any affected state public utility commission for its review or otherwise, each Operating Company shall comply in all respects with any such requirements.

Section 4.2 Effective Date; Term. This Agreement shall become effective on the Effective Date and shall continue in full force and effect until terminated by either party upon not less than 30 days prior written notice to the other party. This Agreement may be terminated and thereafter be of no further force and effect upon the mutual consent of the parties hereto.

Section 4.3 Entire Agreement. This Agreement contains the entire agreement between the parties hereto with respect to the subject matter hereof and supersedes any prior or contemporaneous contracts, agreements, understandings or arrangements, whether written or oral, with respect thereto. Any oral or written statements, representations, promises, negotiations or agreements, whether prior hereto or concurrently herewith, are superseded by and merged into this Agreement.

Section 4.4 Severability. If any provision of this Agreement or any application thereof shall be determined to be invalid or unenforceable, the remainder of this Agreement and any other application thereof shall not be affected thereby.

Section 4.5 Assignment. Neither this Agreement nor any of the rights, interests or obligations hereunder shall be assigned, in whole or in part, by operation of law or otherwise by any party hereto without the prior written consent of the other party. Any attempted or purported assignment in violation of the preceding sentence shall be null and void and of no effect whatsoever. Subject to the preceding two sentences, this Agreement shall be binding upon, inure to the benefit of, and be enforceable by, the parties and their respective successors and assigns.

Section 4.6 Governing Law. This Agreement shall be construed and enforced under and in accordance with the laws of the State of New York, without regard to conflicts of laws principles.

Section 4.7 Captions, etc. The captions and headings used in this Agreement are for convenience of reference only and shall not affect the construction to be accorded any of the provisions hereof. As used in this Agreement, "hereof," "hereunder," "herein," "hereto," and words of like import refer to this Agreement as a whole and not to any particular section or other paragraph or subparagraph thereof.

Section 4.8 Counterparts. This Agreement may be executed in one or more counterparts, each of which shall be deemed a duplicate original hereof, but all of which shall be deemed one and the same Agreement.

Section 4.9 DE Carolinas Conditions. In addition to the terms and conditions set forth herein, with respect to DE Carolinas, the provisions set out in Exhibit A are hereby incorporated herein by reference. In addition, except with respect to the pricing of Asset transfers as set forth herein, DE Carolinas' participation in this Agreement is explicitly subject to the Regulatory Conditions and Code of Conduct approved by the NCUC in its Order Approving Merger Subject to Regulatory Conditions and Code of Conduct issued March 24, 2006, in Docket No. E-7, Sub 795 ("Merger Order"), as such Regulatory Conditions and Code of Conduct may be amended from time to time. In accordance with Regulatory Condition 9 as approved in the Merger Order, nothing in this Agreement shall be construed or interpreted so as to commit DE Carolinas, or to involve DE Carolinas in, joint planning, coordination, or operation of generation, transmission, or distribution facilities with one or more affiliates nor shall it be interpreted as otherwise altering DE Carolinas' obligations with respect to the Regulatory Conditions approved in the Merger Order. In the event of a conflict between the provisions of this Agreement and the Regulatory Conditions and Code, the Regulatory Conditions and Code shall govern, except as altered by the Commission by Order for this Agreement.

Section 4.10 DE Indiana Conditions. DE Indiana agrees and acknowledges that in accordance with its Affiliate Standards, Section II O (i) it will make Assets available to non-affiliated wholesale power marketers under the same terms, conditions and prices, and at the same time, as it makes Assets available to a DE Ohio's wholesale power marketing function, and (ii) it will process all requests for Assets from DE Ohio's wholesale power marketing function and non-affiliated wholesale power marketers on a non-discriminatory basis.

Section 4.11 Regulatory Approvals. This Agreement is expressly contingent on the receipt of all regulatory approvals or waivers deemed necessary by the parties.

IN WITNESS WHEREOF, each of the parties hereto has caused this Agreement to be executed on its behalf by an appropriate officer thereunto duly authorized.

Duke Energy Carolinas, LLC.

By: _____
Richard G. Beach
Assistant Secretary

Duke Energy Indiana, Inc.

By: _____
Richard G. Beach
Assistant Secretary

Duke Energy Ohio, Inc.

By: _____
Richard G. Beach
Assistant Secretary

Duke Energy Kentucky, Inc.

By: _____
Richard G. Beach
Assistant Secretary

EXHIBIT A

DE CAROLINAS CONDITIONS

In connection with the North Carolina Utilities Commission ("NCUC") approval of the Merger in NCUC Docket No. E-7, Sub 795, the NCUC imposed certain Regulatory Conditions ("Regulatory Conditions") and adopted a revised Code of Conduct governing transactions between DE Carolinas and its affiliates ("Code of Conduct"). Pursuant to the Regulatory Conditions and Code of Conduct, the following provisions are applicable to DE Carolinas and considered to be incorporated into the Intercompany Asset Transfer Agreement filed in Docket No. E-7, Sub 844:

(1) DE Carolinas' participation in this Agreement is voluntary. DE Carolinas is not obligated to take or provide services or make any purchases or sales pursuant to this Agreement, and DE Carolinas may elect to discontinue its participation in this Agreement at its election after giving notice under Section 4.2 of the Agreement.

(2) DE Carolinas may not make or incur a charge under this Agreement except in accordance with North Carolina law and the rules, regulations and orders of the NCUC promulgated thereunder.

(3) DE Carolinas may not seek to reflect in rates any (i) costs incurred under this Agreement exceeding the amount allowed by the NCUC or (ii) revenue level earned under this Agreement less than the amount imputed by the NCUC; and

(4) DE Carolinas will not assert in any forum that the NCUC's authority to assign, allocate, make pro-forma adjustments to or disallow revenues and costs for retail ratemaking and regulatory accounting and reporting purposes is preempted and will bear the full risk of any preemptive effects of federal law with respect to this Agreement.

(5) DE Carolinas' authority to engage in transfers pursuant to this Agreement at cost-based pricing as an exception to its Code of Conduct is limited to single Asset transfers where the Cost of such Asset does not exceed $100,000. The annual aggregate limit on (i) transfers of Assets hereunder at cost-based pricing as an exception to DE Carolinas' Code of Conduct; plus (ii) transactions/services rendered to and from DE Carolinas under Section III(D)(3)(d) of the Code of Conduct, shall be $8.5 million on a DE Carolinas total company basis. Any transfers of Assets above the single item/transaction limit shall be priced according to Sections III(D)(3)(a) and III(D)(3)(b) of DE Carolinas' Code of Conduct. Any proposed transfers over the aggregate annual limit are outside the scope of this Agreement and will be filed with the Commission pursuant to N.C. Gen. Stat. § 62-153.

(6) DE Carolinas shall retain appropriate documentation verifying compliance with the terms hereof for Public Staff and NCUC review.

(7) DE Carolinas shall submit to the NCUC for approval any changes in the terms and conditions of this Agreement having or likely to have a material effect on DE Carolinas.

(8) DE Carolinas shall file a separate detailed report in this docket with respect to all transfers engaged in by Duke pursuant to the Agreement.

(9) DE Carolinas acknowledges and agrees that for ratemaking purposes, NCUC approval of DE Carolinas' participation in this Agreement does not constitute approval of the amount of compensation paid with respect to transactions pursuant to the Agreement, and that the authority granted by the NCUC is without prejudice to the right of any party to take issue with any provision of the Agreement or with any transaction pursuant thereto in a future proceeding.

Unofficial FERC-Generated PDF of 20060301-0381 Received by FERC OSEC 02/23/2006 in Docket#: ER06-548-001

FACILITIES OPERATION AGREEMENT

Between

THE CINCINNATI GAS & ELECTRIC COMPANY

and

THE UNION LIGHT, HEAT AND POWER COMPANY

Dated September 27, 2004

Unofficial FERC-Generated PDF of 20060301-0381 Received by FERC OSEC 02/23/2006 in Docket#: ER06-548-001

SKADDEN, ARPS, SLATE, MEAGHER & FLOM LLP

1440 NEW YORK AVENUE, N.W.
WASHINGTON, D.C. 20005-2111

TEL: (202) 371-7000
FAX: (202) 393-5760
http://www.skadden.com

DIRECT DIAL
202-371-7463
DIRECT FAX
202-661-9037
EMAIL ADDRESS
DBUFFING@SKADDEN.COM

FIRM/AFFILIATE OFFICES

BOSTON
CHICAGO
HOUSTON
LOS ANGELES
NEWARK
NEW YORK
PALO ALTO
RESTON
SAN FRANCISCO
WILMINGTON

BEIJING
BRUSSELS
FRANKFURT
HONG KONG
LONDON
MOSCOW
PARIS
SINGAPORE
SYDNEY
TOKYO
TORONTO

February 23, 2006

ER06-548-001

FILED
OFFICE OF THE
SECRETARY
2006 FEB 23 A 11:31
FEDERAL ENERGY
REGULATORY COMMISSION

Magalie R. Salas
Secretary
Federal Energy Regulatory Commission
888 First Street, NE
Washington, DC 20426

RE: The Cincinnati Gas & Electric Company, ~~ER04-1249-~~

Dear Secretary Salas:

On January 25, 2006, The Cincinnati Gas & Electric Company ("CG&E") submitted for filing an amended Facilities Operation Agreement ("Agreement") between CG&E and The Union Light, Heat and Power Company ("ULH&P"). It has come to our attention that this Agreement was inadvertently submitted as Rate Schedule No. 58. This designation, however, was already given to the Joint Transmission System Planning and Operating Agreement between CG&E and PSI Energy, Inc.[1] Therefore, in order to correct this inadvertent error, CG&E is resubmitting the Agreement as Rate Schedule No. 60. Accordingly, a clean copy and a blacklined copy of the Agreement are attached.

If you have any questions regarding this filing, please contact the undersigned.

Respectfully submitted,

Denise M. Buffington

Denise M. Buffington

Counsel for The Cincinnati Gas & Electric Co.

Enclosures

---

[1] *See Cinergy Servs., Inc.*, 98 FERC ¶ 61,306 (2002).

Unofficial FERC-Generated PDF of 20060301-0381 Received by FERC OSEC 02/23/2006 in Docket#: ER06-548-001

FACILITIES OPERATION AGREEMENT

Between

THE CINCINNATI GAS & ELECTRIC COMPANY

and

THE UNION LIGHT, HEAT AND POWER COMPANY

Dated September 27, 2004

Unofficial FERC-Generated PDF of 20060301-0381 Received by FERC OSEC 02/23/2006 in Docket#: ER06-548-001

FACILITIES OPERATION AGREEMENT

Between

THE CINCINNATI GAS & ELECTRIC COMPANY

and

THE UNION LIGHT, HEAT AND POWER COMPANY

Dated September 27, 2004

THIS FACILITIES OPERATION AGREEMENT is dated this 27th day of September, 2004 by and between The Cincinnati Gas & Electric Company, an Ohio corporation with offices at 139 East Fourth Street, Cincinnati, Ohio ("CG&E") and The Union Light, Heat and Power Company, a Kentucky corporation with offices at 139 East Fourth Street, Cincinnati, Ohio ("ULH&P) (each a "Party" and collectively the "Parties").

WITNESSETH:

WHEREAS, ULH&P desires to acquire CG&E's ownership interest in the East Bend Generating Station located in Rabbit Hash, Kentucky, Miami Fort Unit 6 electric generating facility located in North Bend, Ohio, and the Woodsdale Generating Station located in Butler County, Ohio (collectively, the "Plants") from CG&E; and

WHEREAS, CG&E desires to transfer its ownership interest in the Plants to ULH&P; and

WHEREAS, CG&E owns generation step-up transformers connecting the Plants (as

Unofficial FERC-Generated PDF of 20060301-0381 Received by FERC OSEC 02/23/2006 in Docket#: ER06-548-001

defined in Article 2 of this Agreement and collectively referred to hereinafter as the "CG&E Facilities") to the Transmission System; and

WHEREAS, ULH&P desires to utilize the CG&E Facilities to step up power from the Plants to the appropriate voltage level of the interconnected Transmission System; and

WHEREAS, CG&E's costs of owning, operating and maintaining the CG&E Facilities are not included in the rates assessed under the OATT.

NOW, THEREFORE, in consideration of the premises and mutual covenants herein set forth, CG&E and ULH&P agree as follows:

ARTICLE 1

DEFINITIONS

1.1 "Agreement" means this Facility Operations Agreement, including all exhibits attached hereto and any amendments thereto.

1.2 "CG&E" has the meaning given in the recitals to this Agreement, and includes CG&E's permitted successors and assigns.

1.3 "CG&E Facilities" means those facilities described as such in Article 2 of this Agreement.

1.4 "East Bend" shall mean the East Bend Generating Station located in Rabbit Hash, Kentucky.

1.5 "ECAR" means the East Central Area Reliability Council, or any successor organization.

1.6 "Effective Date" means the date of closing of the Transaction.

1.7 "Emergency" has the meaning customarily attributed to it in the electric utility

Unofficial FERC-Generated PDF of 20060301-0381 Received by FERC OSEC 02/23/2006 in Docket#: ER06-548-001

industry in the United States, including, without limitation, any condition on any of the Plants, CG&E Facilities, the Transmission System or the transmission system of other utilities which is likely to result in imminent significant disruption to service to consumers or is imminently likely to endanger life or property.

1.8 "Environmental Laws" means all federal, state, and local laws (including common laws), regulations, rules, ordinances, codes, decrees, judgments, binding directives, or judicial or administrative orders relating to the protection, preservation or restoration of human health, the environment, or natural resources, including, without limitation, laws relating to the Release, or threatened Release, of Hazardous Substances into any media (including, without limitation, ambient air, surface water, groundwater, land, surface and subsurface strata) or otherwise relating to the manufacture, processing, distribution, use treatment, storage, Release, transport, or handling of Hazardous Substances.

1.9 "Event" has the meaning given in Article 26.3 of this Agreement.

1.10 "FERC" means the Federal Energy Regulatory Commission or any successor agency.

1.11 "Force Majeure" has the meaning set forth in Article 11 of this Agreement.

1.12 "Good Utility Practice" means any of the practices, methods and acts engaged in or approved by a significant portion of the electric utility industry in the United States during the relevant time period, or any of the practices, methods and acts which, in the exercise of reasonable judgment in light of the facts known at the time the decision was made, could have been expected to accomplish the desired result at a reasonable cost consistent with good business practices, reliability, safety and expedition. Good Utility Practice is not intended to be limited to

Unofficial FERC-Generated PDF of 20060301-0381 Received by FERC OSEC 02/23/2006 in Docket#: ER06-548-001

the optimum practice, method, or act to the exclusion of all others, but rather includes all acceptable practices, method, or acts generally accepted in the region. Good Utility Practice shall include, but not be limited to, the Rules and Procedures.

1.13 "GSUs" means generation step-up transformers used to increase the voltage from the Plants to the compatible voltage of the interconnected Transmission System.

1.14 "Hazardous Substances" means:

(A) any petrochemical or petroleum products, oil, radioactive materials, radon gas, asbestos in any form that is or could become friable, urea formaldehyde foam insulation and transformers or other equipment that contain dielectric fluid which may contain levels of polychlorinated biphenyls;

(B) any chemicals, materials, or substances defined as or included in the definition of "hazardous substances," "hazardous wastes," "hazardous materials," "restricted hazardous materials," "extremely hazardous substances," "toxic substances," "contaminants," or "pollutants," or words of similar meaning and regulatory effect; or

(C) any other chemical, material, or substance, exposure to which is prohibited, limited or regulated by applicable Environmental Laws.

1.15 "Miami Fort 6" means the Miami Fort Unit 6 electric generating facility located in North Bend, Ohio.

1.16 "MISO" means the Midwest Independent Transmission System Operator, Inc. or any successor organization.

1.17 "Monthly Fee" means the monthly charge for service under this Agreement, as defined in Article 3.2 of this Agreement.

Unofficial FERC-Generated PDF of 20060301-0381 Received by FERC OSEC 02/23/2006 in Docket#: ER06-548-001

1.18 "NERC" means the North American Electric Reliability Council or any successor organization.

1.19 "OATT" means the applicable open access transmission tariff, as filed with the FERC and as it may be amended from time to time, including any successor tariff, under which the applicable open access transmission service over the Transmission System is provided.

1.20 "Parties" means collectively, CG&E and ULH&P, and their permitted successors and assigns.

1.21 "Party" means either CG&E or ULH&P, and their permitted successors and assigns.

1.22 "Plants" has the meaning given in the recitals to this Agreement.

1.23 "PSI Energy" means PSI Energy, Inc. and its permitted successors and assigns.

1.24 "RTO" means the applicable regional transmission operator as certified and approved by FERC.

1.25 "Release" means release, spill, leak, discharge, dispose of, pump, pour, emit, empty, inject, leach, dump, or allow to escape into or through the environment.

1.26 "Rules and Procedures" means the applicable rules and procedures that CG&E or ULH&P must follow and abide by and which shall govern the operational conditions of the Transmission System, including but not limited to such applicable criteria, rules, procedures and standards of MISO, the RTO, NERC, ECAR, and the National Electrical Safety Code, and any successor entity or organization, as they may be amended from time to time, including those of any entity or successor organization.

1.27 "Transaction" means ULH&P's acquisition of CG&E's ownership interest in the

Unofficial FERC-Generated PDF of 20060301-0381 Received by FERC OSEC 02/23/2006 in Docket#: ER06-548-001

Plants.

1.28 "Transmission System" means the transmission facilities owned, operated or controlled by PSI Energy, or CG&E, including conductors, circuit breakers, switches, transformers and other associated equipment used to control the transfer of energy from one place to another, and shall include any modifications, additions, or upgrades made to those facilities.

1.29 "ULH&P" has the meaning given in the recitals to this Agreement, and includes ULH&P's permitted successors and assigns.

1.30 "Woodsdale" means the Woodsdale Generating Station located in Butler County, Ohio.

ARTICLE 2

FACILITIES OPERATION AND MAINTENANCE

2.1 CG&E shall own, operate and maintain in conformance with Good Utility Practice, and permit ULH&P to utilize for the purpose for which they were utilized by CG&E on the date preceding the Effective Date, at ULH&P's expense as set forth in Article 3 hereof, the following described CG&E Facilities (transformer ratings specified as of Effective Date); viz.:

2.1.1 East Bend; the 700 MVA step-up transformer bank (TB) 2 located in or near Rabbit Hash, Kentucky and identified as such in Exhibit 1 of this Agreement;

2.1.2 Miami Fort 6: the 180 MVA step-up transformer bank (TB) 6 located in or

Unofficial FERC-Generated PDF of 20060301-0381 Received by FERC OSEC 02/23/2006 in Docket#: ER06-548-001

near North Bend Ohio as identified as such in Exhibit 2 of this Agreement;

2.1.3 Woodsdale: the three 240 MVA step-up transformer banks (TB) 39, 40, and 41 located in Butler County, Ohio, as identified in Exhibit 3 of this Agreement.

2.2 Curtailment or Interruption of Operation of CG&E Facilities and Disconnection of the Plants and CG&E Facilities.

2.2.1 (A) CG&E may not curtail or interrupt ULH&P's use of any of the CG&E Facilities, disconnect any of the Plants from the CG&E Facilities, or disconnect any of the CG&E Facilities from the Transmission System except when such curtailment, interruption or disconnection is necessary under Good Utility Practice, is required under the OATT, or is otherwise required by MISO or the RTO.

(B) With respect to any curtailment, interruption or disconnection permitted under Article 2.2.1(A) of this Agreement:

(1) CG&E agrees that:

(a) the curtailment, interruption or disconnection shall continue only for so long as reasonably necessary under Good Utility Practice, as required under the OATT, or is otherwise required by MISO or the RTO;

(b) any such curtailment, interruption or disconnection shall be made on a not unduly discriminatory basis with respect to other generators interconnected to the Transmission System;

Unofficial FERC-Generated PDF of 20060301-0381 Received by FERC OSEC 02/23/2006 in Docket#: ER06-548-001

(c) when the curtailment, interruption or disconnection must be made under circumstances which do not allow for advance notice, CG&E will notify ULH&P or its agent as soon as practicable of the reasons for the curtailment, interruption or disconnection and, if known, its expected duration consistent with FERC Order No. 2004 and applicable standards of conduct thereafter; and

(d) when the curtailment, interruption or disconnection can be scheduled, CG&E will consult in advance with ULH&P regarding the timing of such scheduling, and notify ULH&P in advance of the expected duration of the curtailment, interruption or disconnection consistent with FERC Order No. 2004 and any applicable standards of conduct thereafter. CG&E agrees to use commercially reasonable efforts to schedule the curtailment, interruption or disconnection to coincide with the scheduled outages of the Plants.

(2) The Parties agree to cooperate and coordinate with each other to the extent necessary in order to restore the CG&E Facilities to their normal operating state, consistent with system conditions and Good Utility Practice.

2.3 Notwithstanding any other provision of this Agreement, this Agreement shall not be interpreted to or construed to, nor shall this Agreement, confer, transfer, convey or otherwise provide ULH&P an ownership, leasehold or any other property interest in the CG&E Facilities.

Unofficial FERC-Generated PDF of 20060301-0381 Received by FERC OSEC 02/23/2006 in Docket#: ER06-548-001

2.4 Consistent with the Rules and Procedures and applicable standards of conduct, and prior to development thereof, CG&E shall consult with ULH&P to develop a non-binding maintenance schedule in accordance with which CG&E shall perform scheduled maintenance on the CG&E Facilities. CG&E shall use commercially reasonable efforts to coordinate the scheduled maintenance of the CG&E Facilities with the scheduled outages of the Plants.

2.5 Unless otherwise agreed to by the Parties, or otherwise required by law or regulation, or Good Utility Practice, CG&E shall not be required at any time to upgrade or otherwise modify the CG&E Facilities; provided however, at ULH&P's sole expense, CG&E agrees to make any additions, modification, or replacements to the CG&E Facilities requested by ULH&P so long as such additions, modifications, or replacements are consistent with Good Utility Practice.

2.6 Inspections

2.6.1 Right to Inspect. Each Party, at its own cost and expense, has the right, but not the obligation, to inspect or observe the operation and maintenance activities, equipment tests, installation, construction, or other modifications to the other Party's equipment, systems or facilities which might reasonably be expected to affect the observing Party's operations. The Party desiring to inspect or observe must provide the other Party advance written notice of such inspection or observation.

2.6.2 Deficiencies and Defects. If the observing Party observes any deficiencies or defects which might reasonably be expected to adversely affect its operations, it may notify the other Party and said Party will be responsible

Unofficial FERC-Generated PDF of 20060301-0381 Received by FERC OSEC 02/23/2006 in Docket#: ER06-548-001

for making any corrections necessitated by Good Utility Practice. Notwithstanding the foregoing, the observing Party shall have no liability whatsoever for failure to give such notice, it being agreed that the Party owning such equipment, systems or facilities will be fully responsible and liable for all such activities, tests, installation, construction or modification.

2.7 Information and Recordkeeping Obligations and Audit Rights

2.7.1 Information Obligations

(A) Consistent with FERC Order No. 2004 and any applicable standards of conduct, either Party may request that the other Party, and that other Party will promptly provide, at the requesting Party's sole cost and expense, such information and data that the requesting Party may reasonably require to: (1) verify costs relating to, in CG&E's case, the Plants, and in ULH&P's case, the CG&E Facilities, including, but not limited to, costs relating to the procurement, operation, maintenance, construction, and installation of any modifications thereto; (2) carry out its responsibilities and enforce its rights under this Agreement; and (3) satisfy any required reporting obligations it may have to any organization issuing criteria, rules, procedures or standards included in the Rules and Procedures, or any agency to which it is required to report.

2.7.2 Recordkeeping Obligations

(A) Transaction Records. Each Party shall keep such records as may be needed to substantiate performance of its obligations under this Agreement.

Unofficial FERC-Generated PDF of 20060301-0381 Received by FERC OSEC 02/23/2006 in Docket#: ER06-548-001

Neither Party shall make use of the records or summary of transactions of the other Party without the express written consent of the other Party, unless such use is permitted by this Agreement or required by law.

(B) Record Retention. Each Party agrees to retain all records under Article 2.7.2(A) normally kept in the course of business and consistent with Good Utility Practice for a minimum of three (3) years from the date of such record.

2.7.3 Audit Rights. Either Party has the right to audit the other Party's accounts and records pertaining to this Agreement, within three (3) years following the calendar year in which such account entry or record is made, at that other Party's offices where such accounts and records are maintained, provided proper notice is given prior to any audit and such audit occurs during normal business hours, and provided further that the audit will be limited to those portions of such accounts and records that relate to services provided under this Agreement for that calendar year. All actual and reasonable non-labor related costs incurred by either Party in connection with an audit shall be borne by the Party undertaking the audit.

2.8 Environmental Compliance and Procedures. The Parties agree to comply with: (A) all applicable Environmental Laws which affect the ability of the Parties to meet their obligations under this Agreement; and (B) all local notification and response procedures required for all applicable environmental and safety manners which affect the ability the Parties to meet their obligations under this Agreement.

ARTICLE 3.

FEES, BILLING AND PAYMENT

Unofficial FERC-Generated PDF of 20060301-0381 Received by FERC OSEC 02/23/2006 in Docket#: ER06-548-001

3.1 Cooperation. Each Party agrees to cooperate with the other Party in attempting to minimize costs under this Agreement. The Parties may agree to other billing/invoicing arrangements, in recognition of the fact that the Parties are affiliates and share an accounting system, and such arrangement shall not constitute an amendment to this Agreement.

3.2 Monthly Fee. During the Term of this Agreement, ULH&P shall pay to CG&E a monthly fee of $161,148 ("Monthly Fee") for use of the CG&E Facilities, such Monthly Fee being intended to enable CG&E to recover its full costs of owning, operating and maintaining the CG&E Facilities.

3.3 Billing Procedures.

3.3.1 Monthly Invoices. With respect to any costs and expenses for which a Party is entitled to be reimbursed under this Agreement, the Party (the "invoicing Party") must submit an invoice to the other Party at the start of each calendar month for the costs for which it is entitled to be reimbursed for the previous period under this Agreement. Each invoice must detail the work, equipment, or services for which the costs were incurred. The invoicing Party shall provide any supporting documentation requested during the course of an audit.

3.3.2 Payment. Payment of invoiced amounts will be due and payable within thirty (30) days of receipt of the invoice or such other time as the Parties mutually agree. If the payment falls on a Saturday, Sunday or federal or state legal holiday, payment shall be made on the next business day. All payments will be made in immediately available funds payable to the invoicing Party or by wire transfer to a bank named by the invoicing Party. If any undisputed portion of any invoice remains unpaid thirty (30) days after the

Unofficial FERC-Generated PDF of 20060301-0381 Received by FERC OSEC 02/23/2006 in Docket#: ER06-548-001

receipt of the invoice or such other time as the Parties mutually agree upon, the invoicing Party will apply to the unpaid balance, and the other Party will pay, a finance charge at the rate of one and one half percent (1.5%) per month but in no event more than the maximum allowed by the law governing the Agreement.

3.3.3 Disputes. If a Party disputes any portion of an invoice, that Party shall make payment of all amounts not in dispute and notify the invoicing Party in writing of any such dispute and the reasons therefor. No invoice may be disputed after such time as a Party's audit rights set forth in Article 2.7.3 of this Agreement have expired. Any billing disputes must be resolved in accordance with Article 8 of this Agreement. In the event of a billing dispute, each Party agrees to continue to perform its duties and obligations under this Agreement as long as the other Party continues to make all payments not in dispute and adheres to the dispute resolution procedures set forth in Article 8 of this Agreement, pending resolution of such dispute. If a Party fails to meet the requirements set forth in the prior sentence and fails to correct or cure such failure within thirty (30) days after receiving written notice from the other Party, then the other Party may, at its option, proceed in accordance with Article 6.5 of this Agreement. Upon the resolution of any billing dispute, any amounts that must be paid to a Party as a result shall be promptly paid, with a finance charge assessed from the date the payment was due to the date payment is made at the rate of one and one half percent (1.5%) per month but in no event more than the maximum allowed by the law governing this Agreement.

3.3.4 Payment Not a Waiver. Payment of invoices by a Party will not relieve that Party from any responsibilities or obligations it has under this Agreement, nor will it

Unofficial FERC-Generated PDF of 20060301-0381 Received by FERC OSEC 02/23/2006 in Docket#: ER06-548-001

constitute a waiver of any claims that Party may have under this Agreement.

3.4 Limitations on ULH&P's Cost Responsibility Obligations. To the extent that the CG&E Facilities' costs for which ULH&P is responsible for under this Agreement are now or at any time in the future to be recovered by CG&E pursuant to the OATT, any other applicable tariff, or from a party other than ULH&P, ULH&P will not be responsible for such costs under this Agreement. If ULH&P has already paid CG&E for such costs, CG&E agrees to refund to ULH&P such amounts no later than thirty (30) days after CG&E rolls such costs in under the OATT, or any other applicable CG&E tariff, or is otherwise reimbursed for such costs by a party other than ULH&P. CG&E agrees to provide to ULH&P such documentation as ULH&P reasonably requires to determine the amounts of such refunds due to ULH&P.

ARTICLE 4.

CONFIDENTIALITY

4.1 General. Unless compelled to disclose by judicial or administrative process or other provisions of law or as otherwise provided for in this Agreement, any information provided by either Party to the other pursuant to this Agreement and either labeled "CONFIDENTIAL" or otherwise designed in writing as confidential will be utilized by the receiving Party solely in connection with the purposes of this Agreement and will not be disclosed by the receiving Party to any third party (or, in the case of CG&E, to any person engaged in the marketing or trading of electric power) other than as expressly contemplated herein and as necessary for the performance of such Party's obligations hereunder. Each Party will hold in confidence any and all such documents and information furnished by the other Party in connection with this Agreement. Notwithstanding the foregoing provisions of this Article 4.1, each Party may release or disclose

Unofficial FERC-Generated PDF of 20060301-0381 Received by FERC OSEC 02/23/2006 in Docket#: ER06-548-001

such information or documents if such disclosure is compelled by judicial or administrative process or other provisions of law, or to: (i) any organization issuing criteria, rules, procedures or standards included in the Rules and Procedures, to the extent consistent with Good Utility Practice; or (ii) the Party's employees, contractors, affiliates and agents (other than any such employees, contractors, affiliates or agents engaged in the marketing or trading of electric energy, capacity or ancillary services) on a need to know basis so long as the Party first advises them of the existence and content of such provisions.

4.2 Exempt Information and Documents. The Parties' confidentiality obligations set forth in Article 4.1 of this Agreement shall not apply to information or documents that are (A) generally available to the public other than as a result of disclosure by a Party (the "disclosing Party") to the other Party; (B) available to a Party on non-confidential basis prior to disclosure by the disclosing Party; or (C) available to a Party on a non-confidential basis from a source other than the disclosing Party, provided that the source is not known and, by reasonable effort, could not be known by the Party receiving such information or documents to be bound by a confidentiality agreement with the disclosing Party or otherwise prohibited from transmitting the information to the Party receiving such information or documents by a contractual, legal or fiduciary obligation.

4.3 Notification. Each Party will promptly notify the other Party if it receives notice or otherwise concludes that the production of any information or documentation furnished by the disclosing Party and subject to Article 4.1 of this Agreement is being sought under any provision of law, but the notifying Party shall have no obligation to oppose or object to any attempt to obtain such production. If the disclosing Party desires to object or oppose such production, it

Unofficial FERC-Generated PDF of 20060301-0381 Received by FERC OSEC 02/23/2006 in Docket#: ER06-548-001

must do so at its own expense.

4.4 Use of Information or Documentation. Each Party may utilize information or documentation furnished by the disclosing Party and subject to Article 4.1 of this Agreement in any proceeding under Article 8 of this Agreement or in an administrative agency or court of competent jurisdiction addressing any dispute arising under this Agreement, subject to a confidentiality agreement with all participants (including, if applicable, any arbitrator) or a protective order.

4.5 Remedies Regarding Confidentiality. The Parties agree that monetary damages by themselves will be inadequate to compensate a Party for the other Party's breach of its obligations under this Article 4. Each Party accordingly agrees that the other Party is entitled to equitable relief, by way of injunction or otherwise, if it breaches or threatens to breach its obligations under this Article 4.

ARTICLE 5.

DAMAGE TO EQUIPMENT, FACILITIES, AND PROPERTY

5.1 ULH&P's Responsibility. Except to the extent caused by CG&E's negligence, intentional misconduct or failure to act in a manner consistent with Good Utility Practice, ULH&P will be responsible for all physical damage to or destruction of property, equipment, or facilities owned by ULH&P or its affiliates other than CG&E regardless of who brings the claim and regardless of who caused the damage, and ULH&P will not seek recovery or reimbursement from CG&E for the damage.

5.2 CG&E's Responsibility. Except to the extent caused by ULH&P's negligence, intentional misconduct, or failure to act in a manner consistent with Good Utility Practice,

Unofficial FERC-Generated PDF of 20060301-0381 Received by FERC OSEC 02/23/2006 in Docket#: ER06-548-001

CG&E will be responsible for all physical damage to or destruction of property, equipment, or facilities owned by CG&E or its affiliates other than ULH&P regardless of who brings the claim and regardless of who caused the damage, and CG&E will not seek recovery or reimbursement from ULH&P for the damage.

5.3 Insurance. The obligations under this Article 5 are not limited in any way by any limitation on either Party's insurance, and each Party waives any subrogation which any of its insurers may have against the other Party.

ARTICLE 6.

TERM, TERMINATION, AND DEFAULT

6.1 Term. This Agreement shall be effective on the date first written above, subject to its approval or acceptance for filing by the FERC as provided for in Article 26 of this Agreement, and subject to the transfer of CG&E's interest in the Plants to ULH&P, and shall continue in effect for thirty (30) years, and, thereafter, for successive one year periods until either Party terminates the Agreement after providing to the other Party at least twelve months' advance written notice of its intent to terminate this Agreement. Notwithstanding the above, this Agreement may be terminated earlier if (A) the Parties mutually agree; (B) this Agreement is terminated earlier as provided for in this Agreement; or (C) ULH&P terminates the Agreement after providing CG&E at least sixty (60) days' advance written notice of intent to terminate this Agreement.

6.2 Effect of Expiration or Termination of Agreement on Liabilities and Obligations. Expiration or termination of this Agreement shall not relieve ULH&P or CG&E of any of its liabilities and obligations arising hereunder prior to the date expiration or termination becomes

Unofficial FERC-Generated PDF of 20060301-0381 Received by FERC OSEC 02/23/2006 in Docket#: ER06-548-001

effective.

6.3 Effectiveness of Certain Provisions After Expiration or Termination of Agreement. The applicable provisions of this Agreement will continue in effect after expiration or early termination hereof to the extent necessary to provide for final billings, billing adjustments and the determination and enforcement of liability and indemnification obligations arising from acts or events that occurred while this Agreement was in effect. These provisions include, without limitation, Article 9 ("Insurance"), Article 12 ("Indemnification"), and Article 20 ("Limitation of Liability") of this Agreement.

6.4 Default. A Party will be in default under this Agreement if, at any time:

(A) the Party fails to make any payment due the other Party in accordance with this Agreement, and does not make such payment to the other Party within thirty (30) days after receiving written notice from the other Party of such failure;

(B) (1)(a) the Party fails in any material respect to comply with, observe or perform any term or condition of this Agreement; (b) any representation or warranty made herein by the Party fails to be true and correct in all material respects; (c) the Party abandons its work or the facilities contemplated in this Agreement; or (d) the Party fails to provide to the other Party reasonable written assurance of its ability to perform fully and completely any of its material duties and responsibilities under this Agreement within thirty (30) days after receiving any reasonable request for such assurances from the other Party; and

(2)(a) the Party fails to correct or cure the situation within thirty (30) days after receiving written notice thereof from the other Party; or (b) excluding those events set forth in Articles 6.4(A) and 6.4(C), if the situation cannot be completely corrected or cured within such thirty day

Unofficial FERC-Generated PDF of 20060301-0381 Received by FERC OSEC 02/23/2006 in Docket#: ER06-548-001

period, the Party fails to either (i) commence diligent efforts to correct or cure the situation within such thirty day period or (ii) completely correct or cure the situation within sixty (60) days after receiving written notice thereof from the other Party; or

(C) (1) a receiver or liquidator or trustee of the Party or of any of its property is appointed by a court of competent jurisdiction, and such receiver, liquidator or trustee is not discharged within sixty (60) days;

(2) by decree of such court, the Party is adjudicated bankrupt or insolvent or any substantial part of its property is sequestered, and such decree continues undischarged and unstayed for a period of sixty (60) days after the entry thereof;

(3) a petition to declare bankruptcy or to reorganize the Party pursuant to any provision of any federal or state bankruptcy law now in effect or as may hereafter be amended (collectively, "Bankruptcy Laws") is filed against the Party and is not dismissed within sixty (60) days after such filing;

(4) the Party files a voluntary petition in bankruptcy under any provision of any Bankruptcy Law;

(5) the Party consents to the filing of any bankruptcy or reorganization petition against it under any Bankruptcy Law;

(6) the Party makes an assignment for the benefit of its creditors; or

(7) the Party consents to the appointment of a receiver, trustee or liquidator of the Party or all or any part of its property.

6.5 Remedies of Parties Upon Default. Subject to Article 8 of this Agreement, if a Party defaults under this Agreement in accordance with Article 6.4 of this Agreement, the other

Unofficial FERC-Generated PDF of 20060301-0381 Received by FERC OSEC 02/23/2006 in Docket#: ER06-548-001

Party may, at its option, (A) act to terminate this Agreement by providing written notice of termination to the defaulting Party, or (B) take whatever action at law or in equity as may appear necessary or desirable to enforce the performance or observance of any rights, remedies, obligations, agreements, or covenants under this Agreement. Any termination sought under this Article 6.5 shall not take effect until FERC either authorizes any request by either Party seeking termination of this Agreement or accepts any written notice of termination.

6.6 Performance of Other Party's Obligations. If either Party (the "defaulting Party") fails to carry out its obligations under this Agreement and such failure could reasonably be expected to have a material adverse impact on the Transmission System, the CG&E Facilities, the ULH&P Facilities, the Plants, or the regional network, the other Party, following at least ten (10) days' advance written notice (except in cases of Emergencies, in which case only such notice as is reasonably practicable in the circumstances is required), may, but will not be obligated to, perform the obligations of the defaulting Party (including, without limitation, maintenance obligations), in which case the defaulting Party will, upon presentation of an invoice therefor, reimburse the other Party for all actual and reasonable costs and expenses incurred by it in performing said obligations of the defaulting Party (including, without limitation, costs associated with its employees and the costs of appraisers, engineers, environmental consultants and other experts retained by said Party in connection with performance of the defaulting Party's obligations), together with a finance charge on all such amounts of one and one half percent (1.5%) per month but in no event more than the maximum allowed by the law governing this Agreement.

6.7 Remedies Cumulative. Subject to Article 8 of this Agreement, no remedy

Unofficial FERC-Generated PDF of 20060301-0381 Received by FERC OSEC 02/23/2006 in Docket#: ER06-548-001

conferred by any of the provisions of this Agreement is intended to be exclusive of any other remedy and each and every remedy shall be cumulative and shall be in addition to every other remedy given hereunder or now or hereafter existing at law or in equity or by statute or otherwise. The election of any one or more remedies shall not constitute a waiver of the right to pursue other available remedies.

ARTICLE 7.

REPRESENTATIONS

7.1 Representations of CG&E. CG&E represents and warrants the following:

7.1.1 CG&E is a corporation duly organized, validly existing and in good standing under the laws of the State of Ohio, and it has the requisite corporate power and authority to own its properties, and to carry on its business as now being conducted.

7.1.2 CG&E has the requisite corporate power and authority to execute and deliver this Agreement and to carry out the actions required of it by this Agreement. The execution and delivery of this Agreement and the actions it contemplates have been duly and validly authorized by CG&E, and no other corporate proceedings on the part of CG&E are necessary to authorize this Agreement or to consummate the transactions contemplated hereby. This Agreement has been duly and validly executed and delivered by CG&E and constitutes a legal, valid and binding agreement of CG&E enforceable against CG&E in accordance with its terms, subject to the acceptance of this Agreement by the FERC.

7.1.3 The CG&E Facilities are owned by CG&E, and operated or controlled by CG&E. It is further acknowledged that CG&E has the authorization to grant ULH&P use of the CG&E Facilities consistent with Good Utility Practice or will obtain, with the assistance of ULH&P,

Unofficial FERC-Generated PDF of 20060301-0381 Received by FERC OSEC 02/23/2006 in Docket#: ER06-548-001

such authorization as necessary prior to the transfer of the Plants to ULH&P.

7.1.4 CG&E has obtained or will use its reasonable best efforts to timely obtain all approvals of, and has given or will use its reasonable best efforts to give all notices to, any public authority that are required for CG&E to execute, deliver and perform its obligations under this Agreement.

7.1.5 To CG&E's knowledge, it is not in violation of any applicable law, statute, order, rule or regulation promulgated by, or judgment, decree, writ, injunction, or award rendered by, any federal, state, or local governmental court or agency which, individually or in the aggregate, would adversely affect such entity's entering into or performance of its obligations under this Agreement. Such entity's entering into and performance of its obligations under this Agreement will not give rise to any default under any agreement to which either such entity is a party.

7.1.6 CG&E will comply with all applicable laws, rules, regulations, codes, and standards of all federal, state, and local governmental agencies having jurisdiction over either such entity or the transactions under this Agreement and with respect to which failure to comply could reasonably be expected to have a material adverse effect on either Party's performance under this Agreement.

7.1.7 CG&E shall do such other and further acts and things, and shall execute and deliver such instruments and documents, as ULH&P may reasonably request from time to time in furtherance of the purposes of this Agreement.

7.2 Representations of ULH&P. ULH&P represents and warrants the following:

7.2.1 ULH&P is corporation duly organized, validly existing, and in good standing under the laws of the Commonwealth of Kentucky, and ULH&P has the requisite corporate

Unofficial FERC-Generated PDF of 20060301-0381 Received by FERC OSEC 02/23/2006 in Docket#: ER06-548-001

power and authority to own its properties, and to carry on its business as now being conducted.

7.2.2 ULH&P has the requisite corporate power and authority to execute and deliver this Agreement and to carry out the actions required of it by this Agreement. The execution and delivery of this Agreement and the actions it contemplates have been duly and validly authorized by ULH&P, and no other corporate proceedings on the part of ULH&P are necessary to authorize this Agreement or to consummate the transactions contemplated hereby. This Agreement has been duly and validly executed and delivered by ULH&P and constitutes a legal, valid and binding agreement of ULH&P enforceable against it in accordance with its terms, subject to the acceptance of this Agreement by the FERC.

7.2.3 ULH&P has obtained or will obtain all approvals of, and has given or will give all notices to, any public authority that are required for ULH&P to execute, deliver and perform its obligations under this Agreement.

7.2.4 To ULH&P's knowledge, it is not in violation of any applicable law, statute, order, rule, or regulation promulgated by, or judgment, decree, writ, injunction, or award rendered by, any federal, state, or local governmental court or agency which, individually or in the aggregate, would adversely affect ULH&P's entering into or performance of its obligations under this Agreement. ULH&P's entering into and performance of its obligations under this Agreement will not give rise to any default under any agreement to which it is a party.

7.2.5 ULH&P will comply with all applicable laws, rules, regulations, codes, and standards of all federal, state, and local governmental agencies having jurisdiction over ULH&P or the transactions under this Agreement and with respect to which failure to comply could reasonably be expected to have a material adverse effect on either Party's performance under this

Unofficial FERC-Generated PDF of 20060301-0381 Received by FERC OSEC 02/23/2006 in Docket#: ER06-548-001

Agreement.

7.2.6 ULH&P shall do such other and further acts and things, and shall execute and deliver such instruments and documents, as CG&E may reasonably request from time to time in furtherance of the purposes of this Agreement.

7.3 Representations of Both Parties. The representations in Articles 7.1 and 7.2 of this Agreement shall continue in full force and effect for the term of this Agreement.

ARTICLE 8.

DISPUTE RESOLUTION

8.1 Actions Prior to Arbitration

8.1.1 Parties to Address First. Any dispute, disagreement, or claim arising out of or concerning this Agreement must first be addressed by the Parties.

8.1.2 Notice of Dispute. When a Party believes that there is such a dispute, disagreement or claim, that Party may initiate the dispute resolution procedures by giving the other Party written notice of the dispute, disagreement or claim.

8.1.3 Good Faith Negotiations; Applicability of Arbitration. Representatives of the Parties must attempt to negotiate in good faith to resolve such dispute, disagreement or claim within ten (10) days after notice of the dispute, disagreement or claim has been given. If such representatives are unable to satisfactorily resolve such dispute, disagreement or claim, they must refer the matter to senior representatives of each Party with the authority to settle the dispute, disagreement or claim, which such senior representatives shall meet at a mutually acceptable time and place to attempt to resolve the dispute, disagreement or claim. If the senior representatives have not resolved such dispute, disagreement or claim within twenty (20) days

Unofficial FERC-Generated PDF of 20060301-0381 Received by FERC OSEC 02/23/2006 in Docket#: ER06-548-001

after notice of the dispute, disagreement or claim has been given, then the Parties may, upon mutual agreement, submit such dispute, disagreement or claim (including the issue of whether such dispute, disagreement or claim is arbitrable) to binding arbitration.

8.2 Arbitration Procedures. Any arbitration shall be conducted by a single neutral arbitrator appointed by the Parties under the Commercial Arbitration Rules of the American Arbitration Association ("Arbitration Rules") in effect at the time a notice of arbitration is made. The arbitrator shall be selected pursuant to the Arbitration Rules. The arbitrator must be knowledgeable in matters that are the subject of the dispute. The arbitrator shall conduct the arbitration in accordance with the Arbitration Rules in effect at the time arbitration is initiated under this Article 8; provided, however, that, in the event of a conflict between the Arbitration Rules and the terms and provisions of this Article 8, the terms and provisions of this Article 8 shall govern.

8.3 Authority of Arbitrator

8.3.1 No Authority to Modify Agreement. The arbitrator shall have the authority only to interpret and apply the terms and conditions of this Agreement and shall have no power to modify or change any such terms or conditions.

8.3.2 Compliance with Law. The arbitrator shall be required to follow any and all applicable federal, state, or local laws and regulations.

8.3.3 Remedies

(A) The arbitrator may not award punitive damages, multiple damages, or any other damages which are not measured by the prevailing Party's actual damages.

(B) Any award of damages must be determined, limited and controlled by the

Unofficial FERC-Generated PDF of 20060301-0381 Received by FERC OSEC 02/23/2006 in Docket#: ER06-548-001

limitation of damages provision of this Agreement.

(C) The arbitrator may, in his or her discretion, award pre award and post award interest on any damages awarded; provided, however that the rate of interest may not exceed a rate equal to the lower of one and one half percent (1.5%) per month or the maximum rate allowed by the law governing this Agreement.

8.4 Timing and Nature of Decision

8.4.1 Timing. Unless otherwise agreed upon by the Parties, the arbitrator must render a decision as quickly as practicable under the circumstances.

8.4.2 Binding on Parties; Challenges. The decision must be in writing and contain the reasons for the decision. The decision and award of the arbitrator shall be final and binding upon the Parties, their successors, and assigns; provided, however, that such decision and award may be challenged solely on the grounds that the conduct of the arbitrator, or the decision and award itself, violated the standards set forth in the Federal Arbitration Act. Judgment upon the award rendered by the arbitrator may be entered in any court having jurisdiction.

8.4.3 Filing With FERC. The decision must also be filed with FERC if it affects FERC jurisdictional rates, terms and conditions of service or facilities.

8.5 Location of Arbitration. Any arbitration conducted hereunder must be conducted in Indianapolis, Indiana, unless the Parties mutually agree upon another location.

8.6 Costs. Each Party shall be responsible for its own costs and expenses, including attorneys' fees, incurred during the arbitration and for fifty percent (50%) of the cost of the arbitrator.

8.7 Confidentiality. The existence, contents, or results of any arbitration proceeding

Unofficial FERC-Generated PDF of 20060301-0381 Received by FERC OSEC 02/23/2006 in Docket#: ER06-548-001

conducted under this Article 8 may not be disclosed without the prior written consent of both Parties; provided, however, that either Party may (A) make such disclosures as may be necessary to (1) satisfy regulatory obligations to any regulatory authority having jurisdiction or (2) seek or obtain from a court of competent jurisdiction judgment on, confirmation or vacation of an arbitration award; (B) inform its lenders, affiliates, auditors, and insurers, as necessary, under pledge of confidentiality; and (C) consult with experts as required in connection with the arbitration proceeding under pledge of confidentiality. If either Party seeks preliminary injunctive relief from any court to preserve the status quo or avoid irreparable harm pending arbitration, the Parties agree to use commercially reasonable efforts to keep the court proceedings confidential, to the maximum extent permitted by the law.

8.8 FERC Jurisdiction Over Certain Disputes

8.8.1 Nothing in this Agreement shall preclude, or be construed as precluding, either Party from filing a petition or complaint with the FERC with respect to any arbitrable claim over which the FERC has jurisdiction; provided, however, that neither Party may file a petition or claim at FERC with respect to an issue which has been submitted to binding arbitration pursuant to Article 8.1.3 of this Agreement.

8.8.2 If the FERC determines that it has no jurisdiction or declines to resolve all or a portion of a claim, that portion of the claim may be resolved through arbitration as provided for in this Article 8. Any decision, finding of fact, or order of the FERC shall be final and binding, subject to the judicial review provided for under the Federal Power Act.

8.8.3 The arbitrator shall have no authority to modify, and shall be conclusively bound by, any decision, finding of fact, or order of the FERC; provided, however, that, to the extent that

Unofficial FERC-Generated PDF of 20060301-0381 Received by FERC OSEC 02/23/2006 in Docket#: ER06-548-001

a decision, finding of fact or order of the FERC does not provide a final or complete remedy to the Party seeking relief, such Party may proceed to arbitration under this Article 8, subject to the FERC decision, finding of fact, or order.

8.9 Preliminary Injunctive Relief. Nothing in this Article 8 precludes, or is to be construed as precluding, either Party from resorting to a court of competent jurisdiction for the purpose of securing a temporary or preliminary injunction to preserve the status quo or avoid irreparable harm pending the resolution of a dispute pursuant to this Article 8.

ARTICLE 9.

INSURANCE

9.1 General. Each Party agrees to maintain, at its own cost and expense, in full force and effect throughout the term of this Agreement, the types of and minimum dollar amounts of insurance or self insurance coverage as would be carried by similar companies in similar circumstances.

9.2 Certificates of Insurance; Copies of Policies. Each Party agrees to provide the other Party with certificates of insurance evidencing the insurance coverage or self insurance as set forth in Article 9.1 of this Agreement. Each Party agrees to provide the other copies of all policies or evidence of self insurance upon request.

9.3 Waiver of Subrogation. Each Party waives any right to subrogation under its respective insurance policies for any liability each has agreed to assume under this Agreement. Evidence of this requirement shall be noted on all certificates of insurance.

9.4 Failure to Comply. Failure of either Party to comply with the above insurance

Unofficial FERC-Generated PDF of 20060301-0381 Received by FERC OSEC 02/23/2006 in Docket#: ER06-548-001

terms and conditions, or the complete or partial failure of an insurance carrier to fully protect and indemnify the other Party or its affiliates, or the inadequacy of the insurance shall not in any way lessen or affect the obligations or liabilities of each Party to the other.

ARTICLE 10.

NOTICES

10.1 General. Except for notices of occurrences requiring prompt attention, all notices required or permitted to be given under this Agreement must be in writing and delivered by (A) hand; (B) registered or certified first class mail, postage prepaid, return receipt requested; (C) facsimile transmission; or (D) a reputable overnight courier which provides evidence of delivery or refusal. All such notices shall be addressed as follows:

To CG&E: Vice President
Electric System Operations
Cinergy Services, Inc.
139 East Fourth Street
Cincinnati, OH 45202
Tel: 513 287 3455
Fax: 513 287 3812

To ULH&P: In the case of notices pertaining to curtailment, interruption or disconnection, notice will be provided to the manager of the respective affected Plant, as follows:

East Bend:
Plant Manager
East Bend Electric Generating Station
139 East Fourth Street, EG373
Cincinnati, OH 45202
Tel: 513 467 4811
Fax: 513 419 5676

Miami Fort 6:
Plant Manager
Miami Fort Electric Generating Station

Unofficial FERC-Generated PDF of 20060301-0381 Received by FERC OSEC 02/23/2006 in Docket#: ER06-548-001

139 East Fourth Street, EG376
Cincinnati, OH 45202
Tel: 513 467 4936
Fax: 513 467 4931

Woodsdale:

Manager, CT Fleet Portfolio
Woodsdale Electric Generating Station
139 East Fourth Street, EG379
Cincinnati, OH 45202
Tel: 513 467 5351
Fax: 513 467 5399

All other notices to ULH&P shall be provided to:

Vice President
Power Generation
139 East Fourth Street, EM402
Cincinnati, OH 45201
Tel: 513 287 3485
Fax: 513 287 2823

10.2 Changes. Either Party may change its address for notices or the person(s) to whom notices should be given by notice to the other Party in the manner provided above.

10.3 Emergencies. Notwithstanding Article 10.1 of this Agreement, any notice concerning a system Emergency or other occurrence requiring prompt attention may be made by telephone or in person, provided that such notice is confirmed in writing promptly thereafter.

10.4 Authority of Party Representatives. The representatives noted in Article 10.1 of this Agreement, or their designees (including points of contact), shall be authorized to act on behalf of the Parties, and their instructions, requests, and decisions will be binding upon the Parties as to all matters pertaining to this Agreement and the performance of the Parties hereunder. Only these representatives shall have the authority to commit funds or make binding

Unofficial FERC-Generated PDF of 20060301-0381 Received by FERC OSEC 02/23/2006 in Docket#: ER06-548-001

obligations on behalf of the Parties. The representatives shall be responsible for tracking work, costs, schedules and all other matters related to this Agreement, and for the performance of any third parties.

10.5 Points of Contact. Each Party representative noted in Article 10.1 of this Agreement shall designate a person to act as a twenty four (24) hour point of contact, which such person shall have knowledge and control of that Party's facilities. The point of contact shall be the day to day method of communicating any and all changes in operational status and operational issues and concerns relating to each Party's facilities.

ARTICLE 11.

FORCE MAJEURE

11.1 General. Neither Party shall be considered to be in default or breach of this Agreement or liable in damages or otherwise responsible to the other Party for any delay in or failure to carry out any of its obligations under this Agreement if, and only to the extent that, the Party is unable to perform or is prevented from performing by an event of force majeure. Notwithstanding the foregoing sentence, neither Party may claim force majeure for any delay or failure to perform or carry out any provision of this Agreement to the extent that such Party has been negligent or engaged in intentional misconduct and such negligence or misconduct contributed to that Party's delay or failure to perform or carry out its duties and obligations under this Agreement. A Party's exemption from liability will extend for the period of time necessitated by the event of force majeure. All performance obligations affected by the event of force majeure will be extended for a period equal to the length of the resulting delay.

Unofficial FERC-Generated PDF of 20060301-0381 Received by FERC OSEC 02/23/2006 in Docket#: ER06-548-001

11.2 Force Majeure Defined. The term "force majeure" means those causes beyond the reasonable control of the Party claiming force majeure and which, through the exercise of Good Utility Practice and reasonable care, that Party could not have avoided, including, but not limited to, the following: flood; lightning strikes; earthquake; fire; epidemic; war; invasion; riot; civil disturbance; sabotage; explosion; insurrection; military or usurped power; strikes affecting more than one locality; labor dispute; action of any court or governmental authority, or any civil or military authority de facto or de jure; change in law; act of God or the public enemy; or any other event or cause of a similar nature beyond a Party's reasonable control. Mere economic hardship of either Party does not constitute Force Majeure.

11.3 Procedures. A Party claiming force majeure must:

(A) give written notice to the other Party of the occurrence of a force majeure event no later than three (3) business days after learning of the occurrence of such an event;

(B) use due diligence to resume performance or the provision of service hereunder as soon as practicable;

(C) take all commercially reasonable actions to correct or cure the force majeure event, provided, however, that settlement of strikes or other labor disputes are completely within the sole discretion of the Party affected by such strike or labor dispute;

(D) exercise all reasonable efforts to mitigate or limit damages to the other Party; and

(E) provide prompt written notice to the other Party of the cessation of the adverse effect of the force majeure event on its ability to perform under this Agreement.

ARTICLE 12.

INDEMNIFICATION

Unofficial FERC-Generated PDF of 20060301-0381 Received by FERC OSEC 02/23/2006 in Docket#: ER06-548-001

12.1 Indemnification. Subject to Articles 5.1, 5.2 and 20.1 of this Agreement, each Party agrees to indemnify, release and hold the other Party and its affiliates, trustees, officers, directors, agents, and employees harmless from and against any and all damages, costs (including attorneys' fees), suits, cause of action, fines, penalties or liabilities, in tort, contract or otherwise, of any kind and nature whatsoever brought by or associated with claims involving a third party, and any other obligation to third parties (collectively, "Liabilities") resulting from, or claimed to have arisen as a result of any act or omission of the indemnifying Party and/or its officers, directors, employees, agents and subcontractors arising out of or connected with the indemnifying Party's performance or breach of this Agreement or the indemnifying Party's exercise of its rights hereunder, except to the extent that such Liabilities resulted from the negligence, intentional wrongdoing, or willful misconduct of the Party seeking indemnification. Each Party hereby waives recourse against the other Party and its affiliates, trustees, officers, directors, agents, and employees for, and releases the other Party and affiliates, trustees, officers, directors, agents, and employees from, any and all Liabilities for or arising from damage to its property or from damage or injury to person(s) due to performance under this Agreement by such other Party, except to the extent such damage or injury resulted from the other Party's negligence, intentional wrongdoing, or willful misconduct.

12.2 Conditions. Each Party's obligations with respect to claims and suits covered by this Article 12 are subject to the conditions that (A) the Party seeking indemnification must give the indemnifying Party reasonably prompt notice of any such claim or suit; (B) the Party seeking indemnification must cooperate in the defense of any such claim or suit, the costs of which are to be borne by the indemnifying Party; and (C) the indemnifying Party has sole control of the

Unofficial FERC-Generated PDF of 20060301-0381 Received by FERC OSEC 02/23/2006 in Docket#: ER06-548-001

defense of such claim or suit to the extent of the indemnifying Party's liability for any such claim or suit.

12.3 Consent. Neither Party may settle, compromise, decline to appeal or otherwise dispose of any action, proceeding, or claim with respect to which indemnification is sought without the prior written consent of the other Party. In the event that any claim is settled, each Party agrees to not publicize the settlement and to make every effort to ensure that any settlement agreement contains a non-disclosure provision; provided, however, that, if required by law, either Party may disclose the existence or content of the settlement agreement.

12.4 Survival. Each Party's indemnification obligation will survive expiration or early termination of this Agreement.

ARTICLE 13.

INTEGRATION

13.1 Entire Agreement. This Agreement sets forth the entire agreement and understanding of ULH&P and CG&E and supersedes all prior oral and written understandings and agreements, oral or written, between ULH&P and CG&E with respect to the specific subject matter addressed herein.

ARTICLE 14.

RELATIONSHIP OF PARTIES

14.1 Relationship of Parties. Nothing in this Agreement is to be construed or deemed to cause, create, constitute, give effect to, or otherwise recognize CG&E and ULH&P to be partners, joint venturers, employer and employee, principal and agent, or any other business association, with respect to any matter.

Unofficial FERC-Generated PDF of 20060301-0381 Received by FERC OSEC 02/23/2006 in Docket#: ER06-548-001

14.2 No Authority to Act for Other Party. Unless otherwise agreed to in writing signed by both Parties, neither Party shall have any authority to create or assume in the other Party's name or on its behalf any obligation, express or implied, or to act or purport to act as the other Party's agent or legally empowered representative for any purpose whatsoever.

14.3 No Liability for Acts of Other Party. Neither Party shall be liable to any third party in any way for any engagement, obligation, contract, representation, or for any negligent act or omission of the other Party, except as expressly provided for herein.

ARTICLE 15.

WAIVER

15.1 Waiver Permitted. Except as otherwise provided for in this Agreement, the failure of either Party to comply with any obligation, covenant, agreement, or condition herein may be waived by the Party entitled to the benefits thereof only by a written instrument signed by the Party granting such waiver.

15.2 Limited Nature of Waivers. Any waiver granted by a Party may not operate as a waiver of any other failure of the Party granted a waiver to comply with any obligation, covenant, agreement, or condition herein.

ARTICLE 16.

AMENDMENT

16.1 CG&E Section 205 Rights. Notwithstanding any provision in this Agreement to the contrary, CG&E may unilaterally make application to the FERC under Section 205 of the Federal Power Act and pursuant to FERC's rules and regulations promulgated thereunder for a change in any rate, term, condition, charge, classification of service, rule or regulation under or

Unofficial FERC-Generated PDF of 20060301-0381 Received by FERC OSEC 02/23/2006 in Docket#: ER06-548-001

related to this Agreement.

16.2 ULH&P Section 206 Rights. Notwithstanding any provision in this Agreement to the contrary, ULH&P may exercise its rights under Section 206 of the Federal Power Act and pursuant to FERC's rules and regulations promulgated thereunder with respect to any rate, term, condition, charge, classification of service, rule or regulation for any services provided under this Agreement over which the FERC has jurisdiction.

16.3 Amendments. Except as provided for in Articles 16.1 and 16.2 of this Agreement, this Agreement may only be modified, amended, changed, or supplemented in writing signed by ULH&P and CG&E.

ARTICLE 17.

SUCCESSORS, ASSIGNS,

AND THIRD PARTY BENEFICIARIES

17.1 Binding On Parties, Successors, and Assigns. This Agreement shall be binding upon and inure to the benefit of the Parties hereto and their successors and assigns. No person or Party shall have any rights, benefits or interests, direct or indirect, arising from this Agreement except the Parties hereto, their successors and authorized assigns. The Parties expressly disclaim any intent to create any rights in any person or party as a third party beneficiary to this Agreement.

17.2 Assignment. Neither Party shall voluntarily assign this Agreement, nor assign its rights nor delegate its duties under this Agreement, or any part of such rights or duties, without the written consent of the other Party, which consent shall not be unreasonably withheld. Any such assignment or delegation made without such written consent shall be null and void;

Unofficial FERC-Generated PDF of 20060301-0381 Received by FERC OSEC 02/23/2006 in Docket#: ER06-548-001

provided, however, that such written consent shall not be required: (i) in connection with the sale, merger, or transfer of all or a substantial portion of the properties of a Party (and, in the case of CG&E, its transmission system and the CG&E Facilities), so long as the assignee in such a sale, merger, or transfer assumes directly all of the assignor's rights, duties, obligations and liabilities arising under this Agreement; (ii) for CG&E to assign this Agreement to any wholly-owned direct or indirect subsidiary of Cinergy Corp., a Delaware corporation, so long as such subsidiary assumes directly all of the assignor's rights, duties, obligations and liabilities arising under this Agreement; (iii) for CG&E to assign this Agreement to any purchaser of all or a substantial portion of the Transmission System, so long as the purchaser assumes directly all of the assignor's rights, duties, obligations and liabilities arising under this Agreement; or (iv) for ULH&P to assign this Agreement to any purchaser of all or a substantial portion of the Plants, so long as the purchaser assumes directly all of the assignor's rights, duties, obligations and liabilities arising under this Agreement.

17.3 Financing Parties. Notwithstanding the foregoing, ULH&P may assign this Agreement without CG&E's prior consent to any future owner of the Plants, as long as the future owner assumes directly all of ULH&P's rights, duties, obligations and liabilities under this Agreement. In addition and notwithstanding the foregoing, ULH&P or its assignee may assign this Agreement to the persons, entities or institutions providing financing or refinancing for the development, design, construction or operation of the Plants and, if ULH&P provides notice thereof to CG&E, CG&E shall provide notice and reasonable opportunity for such lenders to cure any default under this Agreement. CG&E shall, if requested by such lenders, execute its standard documents and certificates as may be requested with respect to the assignment and

Unofficial FERC-Generated PDF of 20060301-0381 Received by FERC OSEC 02/23/2006 in Docket#: ER06-548-001

status of this Agreement, provided such documents do not change the rights of CG&E under this Agreement except with respect to providing notice and a reasonable opportunity to cure defaults. In the event of any foreclosure by such lenders, the purchasers at such foreclosure or any subsequent purchaser shall, upon request, be entitled to the rights and benefits of (and be bound by) this Agreement so long as it is an entity entitled to interconnect with the Transmission System.

17.4 Release of Assigning Party. Any assignment authorized as provided in Article 17.2 or Article 17.3 of this Agreement will not operate to relieve the Party assigning this Agreement of any of its rights, interests, duties, obligations or liabilities hereunder or of the responsibility of full compliance with the requirements of this Agreement unless (A) the other Party consents, if such consent is required under such sections, in which case such consent shall not be unreasonably withheld, and (B) the assignee agrees in writing to be bound by all of the duties, obligations and liabilities of the assigning Party provided for in this Agreement.

ARTICLE 18.

SUBCONTRACTORS

18.1 Use of Subcontractors or Agents Permitted. Nothing in this Agreement will prevent either Party from utilizing the services of subcontractors or agents as it deems appropriate; provided, however, that all such subcontractors and agents comply with the terms and conditions of this Agreement.

18.2 Retaining Party to Remain Responsible. The creation of any subcontract or agency relationship shall not relieve the retaining Party of any of its obligations under this Agreement. Each Party shall be fully responsible to the other Party for the acts or omissions of

Unofficial FERC-Generated PDF of 20060301-0381 Received by FERC OSEC 02/23/2006 in Docket#: ER06-548-001

any subcontractor or agent it hires as if no subcontract or agency relationship had been made. Any obligation imposed by this Agreement upon either Party, where applicable, shall be equally binding upon and construed as having application to any subcontractor or agent.

18.3 Liability for Subcontractors or Agents. Each Party will be liable for, indemnify, and hold harmless the other Party, its affiliates, and their officers, directors, employees, agents, and assigns from and against any and all claims, demands, or actions from its subcontractors or agents; and will be responsible for all costs, expenses, and legal fees associated therewith and all judgments, decrees, and awards rendered therein.

18.4 No Third Party Beneficiary. No subcontractor or agent is intended to be or will be deemed a third party beneficiary of this Agreement.

18.5 No Limitation by Insurance. The obligations under this Article 18 are not limited in any way by any limitation on subcontractor's or agent's insurance.

ARTICLE 19.

LABOR DISPUTES

19.1 Notice. Each Party agrees to promptly notify the other, orally and then in writing, of any labor dispute which may reasonably be expected to affect the operations of the other Party.

ARTICLE 20.

LIMITATION OF LIABILITY

20.1 No Consequential Damages. Neither Party shall be liable to the other Party or its parent, subsidiaries, affiliates, officers, directors, agents, employees, successors, or assigns for incidental, punitive, special, indirect, multiple, or consequential damages (including attorneys'

Unofficial FERC-Generated PDF of 20060301-0381 Received by FERC OSEC 02/23/2006 in Docket#: ER06-548-001

fees, litigation costs, and claims for lost profits) connected with or resulting from performance or non-performance of this Agreement.

20.2 Application; Survival. The limitation of liability provided for in this Article 20 will apply regardless of fault, and will survive expiration or early termination of this Agreement.

ARTICLE 21.

GOVERNING LAW AND INTERPRETATION

21.1 Applicable Law. This Agreement and all rights, obligations, and performances hereunder are subject to all applicable federal and state laws and to all duly promulgated orders and other duly authorized action of any governmental authority with competent jurisdiction.

21.2 Governing Law. This Agreement is to be governed by federal law where applicable, and when not in conflict with or preempted by federal law, this Agreement shall be governed by and construed in accordance with the laws of the State of Ohio without regard to its conflict of laws principles. Except for those matters which are brought to the FERC or which are resolved through arbitration, any action arising out of or concerning this Agreement must be brought in the courts of the State of Ohio.

21.3 No Presumption. This Agreement shall be construed without regard to any presumption or other rule requiring construction against the Party causing this Agreement to be drafted.

21.4 Conflicts Between Main Body of Agreement and Exhibits. In the event of a conflict between the main body of this Agreement and any exhibit hereto, the terms of the main body of this Agreement shall govern.

ARTICLE 22.

Unofficial FERC-Generated PDF of 20060301-0381 Received by FERC OSEC 02/23/2006 in Docket#: ER06-548-001

HEADINGS AND CAPTIONS

22.1 No Effect on Interpretation. The headings and captions contained in this Agreement are for convenience only and shall not affect the interpretation of this Agreement.

ARTICLE 23.

COUNTERPARTS

23.1 Counterpart Execution Permitted. This Agreement may be executed in separate or multiple counterparts, all of which shall evidence a single agreement.

ARTICLE 24.

SEVERABILITY

24.1 Severable Nature of Agreement. If any provision of this Agreement or the application thereof to any person or circumstances is, to any extent, held to be invalid or unenforceable, the remainder of this Agreement, or the application of such provision to persons or circumstances other than those as to which it is held to be invalid or unenforceable, will not be affected thereby, and each provision of this Agreement shall be valid and enforceable to the fullest extent permitted by law.

ARTICLE 25.

OPERATING COMMITTEE

25.1 Representatives. The Parties shall establish a committee of authorized representatives to be known as the Operating Committee. Each of the Parties shall designate, in writing delivered to the other Party, the person who is to act as its representative on said committee (and the person or persons who may serve as alternate or alternates whenever such

Unofficial FERC-Generated PDF of 20060301-0381 Received by FERC OSEC 02/23/2006 in Docket#: ER06-548-001

representative is unable to act). Such representatives and alternate or alternates shall each be persons familiar with the facilities of the Party he or she represents, and each shall be fully authorized to cooperate on behalf of the Party they represent in performing the functions delegated to the Operating Committee.

25.2 Duties of Operating Committee. The Operating Committee shall perform the following:

(A) All functions pertaining to the coordination of maintenance of the Plants, the CG&E Facilities, and the Transmission System.

(B) All matters pertaining to the control of time, frequency, energy flow, kilovar exchange, power factor, voltage and other similar matters bearing on the satisfactory synchronous operations of the Plants, the CG&E Facilities, and the Transmission System.

(C) Such other functions not specifically provided for herein upon which cooperation, coordination, and agreement as to quantity, time, method, terms and conditions are necessary in order that the operation of the Plants, the CG&E Facilities, and the Transmission System may be coordinated to the fullest practicable extent as agreed upon by the Parties.

(D) Resolution of disputes and operating issues.

25.3 Right to Inspect. For the purpose of inspection, checking of records, and all other pertinent matters, said representatives and their alternates shall have the right to request any and all applicable documentation and shall have the right of entry to all property of the Parties used in connection with the performance of this Agreement.

CG&E shall have the right to enter and inspect the ULH&P facilities interconnected to

Unofficial FERC-Generated PDF of 20060301-0381 Received by FERC OSEC 02/23/2006 in Docket#: ER06-548-001

the CG&E Facilities at its discretion under non-Emergency operating conditions. ULH&P shall have the right to enter and inspect the CG&E Facilities at its discretion under non-Emergency operating conditions. Access shall be provided where the Party requesting access provides at least twenty-four (24) hours' advance notice of its desire to inspect and the facilities it desires to inspect.

25.4 Limit of Authority. The Operating Committee shall not have authority to modify any of the terms or conditions of this Agreement.

25.5 Unresolvable Disputes. If the Operating Committee is unable to take action on any matter to be acted upon by it under this Agreement because of a dispute between the representatives as to such matter, then dispute resolution shall proceed in compliance with Article 8 of this Agreement.

ARTICLE 26.

OTHER CONDITIONS

26.1 Filing of Agreement with FERC. CG&E agrees to file this Agreement with the FERC for approval under Section 205 of the Federal Power Act and with any other appropriate regulatory agency as soon as practicable after its execution by the Parties. ULH&P agrees to support such filing, to reasonably cooperate with CG&E with respect to the filing, and to provide any information, including the filing of testimony, reasonably required by CG&E to comply with applicable filing requirements.

26.2 Filing of Amendments. Promptly upon execution of any amendment to this Agreement by the Parties pursuant to Article 16.3 or Article 26.3 of this Agreement, CG&E

Unofficial FERC-Generated PDF of 20060301-0381 Received by FERC OSEC 02/23/2006 in Docket#: ER06-548-001

shall, if necessary, file such amendment with FERC and with any other appropriate regulatory agency. ULH&P agrees to support such filing, to reasonably cooperate with CG&E with respect to such filing, and to provide any information, including the filing of testimony, reasonably required by CG&E to comply with applicable filing requirements.

26.3 Good Faith Negotiations Upon Occurrence of Certain Events. If one of the following events (an "Event") takes place, the Parties agree to negotiate in good faith an amendment or amendments to this Agreement or to take other appropriate action so as to put each Party in as nearly the same position as the Parties would have been had the Event not occurred:

(A) this Agreement is not approved or accepted for filing by FERC without modification or condition; or

(B) FERC, the United States Congress, any state or state regulatory commission, any organization issuing criteria, rules, procedures or standards included in the Rules and Procedures or CG&E (upon approval of the FERC) implements any change in any law, regulation, rule, procedure, standard, criteria or practice which materially affects or is reasonably expected to materially affect either Party's ability to perform under this Agreement; or

(C) compliance with this Agreement causes CG&E or any other entity exercising control over the Transmission System, or ULH&P to be in non-compliance with any requirement of the FERC.

26.3.1 Amendments. Any amendment the Parties negotiate pursuant to this Article 26.3 must be executed by the Parties in writing in accordance with Article 16.3 of this Agreement and, if necessary, filed with the FERC or any other appropriate regulatory agency in accordance

Unofficial FERC-Generated PDF of 20060301-0381 Received by FERC OSEC 02/23/2006 in Docket#: ER06-548-001

with Article 26.2 of this Agreement.

26.3.2 Failure to Agree. If, within sixty (60) days after the occurrence of an Event, the Parties (A) are unable to reach agreement as to what, if any, amendments are necessary, and (B) fail to take other appropriate action so as to put each Party in as nearly the same position as the Parties would have been had the Event not occurred, the Parties may proceed under Article 8 of this Agreement to resolve any disputes related thereto.

26.3.3 Failure to Perform Due to Event. If either CG&E or ULH&P is unable to fully perform its obligations under this Agreement due to the occurrence of an Event, the affected Party will not be deemed to be in default of its obligations under this Agreement to the extent that (A) the Party is unable to perform as a result of the Event and (B) the affected Party acts in accordance with its obligations under this Article 26.3.

Unofficial FERC-Generated PDF of 20060301-0381 Received by FERC OSEC 02/23/2006 in Docket#: ER06-548-001

IN WITNESS WHEREOF the Parties hereto have caused this Agreement to be executed by their duly authorized officers and their respective corporate seals to be hereunto affixed as of the date first above mentioned.

THE CINCINNATI GAS & ELECTRIC COMPANY

By: _____
John C. Procario
Senior Vice President

THE UNION LIGHT, HEAT AND POWER COMPANY

By: _____
Gregory C. Ficke
President

Unofficial FERC-Generated PDF of 20060301-0381 Received by FERC OSEC 02/23/2006 in Docket#: ER06-548-001

FACILITIES OPERATION AGREEMENT

Between

THE CINCINNATI GAS & ELECTRIC COMPANY

and

THE UNION LIGHT, HEAT AND POWER COMPANY

Dated September 27, 2004

Unofficial FERC-Generated PDF of 20060301-0381 Received by FERC OSEC 02/23/2006 in Docket#: ER06-548-001

FACILITIES OPERATION AGREEMENT

Between

THE CINCINNATI GAS & ELECTRIC COMPANY

and

THE UNION LIGHT, HEAT AND POWER COMPANY

Dated September 27, 2004

THIS FACILITIES OPERATION AGREEMENT is dated this 27th day of September, 2004 by and between The Cincinnati Gas & Electric Company, an Ohio corporation with offices at 139 East Fourth Street, Cincinnati, Ohio ("CG&E") and The Union Light, Heat and Power Company, a Kentucky corporation with offices at 139 East Fourth Street, Cincinnati, Ohio ("ULH&P) (each a "Party" and collectively the "Parties").

WITNESSETH:

WHEREAS, ULH&P desires to acquire CG&E's ownership interest in the East Bend Generating Station located in Rabbit Hash, Kentucky, Miami Fort Unit 6 electric generating facility located in North Bend, Ohio, and the Woodsdale Generating Station located in Butler County, Ohio (collectively, the "Plants") from CG&E; and

WHEREAS, CG&E desires to transfer its ownership interest in the Plants to ULH&P; and

WHEREAS, CG&E owns generation step-up transformers connecting the Plants (as

Unofficial FERC-Generated PDF of 20060301-0381 Received by FERC OSEC 02/23/2006 in Docket#: ER06-548-001

defined in Article 2 of this Agreement and collectively referred to hereinafter as the "CG&E Facilities") to the Transmission System; and

WHEREAS, ULH&P desires to utilize the CG&E Facilities to step up power from the Plants to the appropriate voltage level of the interconnected Transmission System; and

WHEREAS, CG&E's costs of owning, operating and maintaining the CG&E Facilities are not included in the rates assessed under the OATT.

NOW, THEREFORE, in consideration of the premises and mutual covenants herein set forth, CG&E and ULH&P agree as follows:

ARTICLE 1

DEFINITIONS

1.1 "Agreement" means this Facility Operations Agreement, including all exhibits attached hereto and any amendments thereto.

1.2 "CG&E" has the meaning given in the recitals to this Agreement, and includes CG&E's permitted successors and assigns.

1.3 "CG&E Facilities" means those facilities described as such in Article 2 of this Agreement.

1.4 "East Bend" shall mean the East Bend Generating Station located in Rabbit Hash, Kentucky.

1.5 "ECAR" means the East Central Area Reliability Council, or any successor organization.

1.6 "Effective Date" means the date of closing of the Transaction.

1.7 "Emergency" has the meaning customarily attributed to it in the electric utility

Unofficial FERC-Generated PDF of 20060301-0381 Received by FERC OSEC 02/23/2006 in Docket#: ER06-548-001

industry in the United States, including, without limitation, any condition on any of the Plants, CG&E Facilities, the Transmission System or the transmission system of other utilities which is likely to result in imminent significant disruption to service to consumers or is imminently likely to endanger life or property.

1.8 "Environmental Laws" means all federal, state, and local laws (including common laws), regulations, rules, ordinances, codes, decrees, judgments, binding directives, or judicial or administrative orders relating to the protection, preservation or restoration of human health, the environment, or natural resources, including, without limitation, laws relating to the Release, or threatened Release, of Hazardous Substances into any media (including, without limitation, ambient air, surface water, groundwater, land, surface and subsurface strata) or otherwise relating to the manufacture, processing, distribution, use treatment, storage, Release, transport, or handling of Hazardous Substances.

1.9 "Event" has the meaning given in Article 26.3 of this Agreement.

1.10 "FERC" means the Federal Energy Regulatory Commission or any successor agency.

1.11 "Force Majeure" has the meaning set forth in Article 11 of this Agreement.

1.12 "Good Utility Practice" means any of the practices, methods and acts engaged in or approved by a significant portion of the electric utility industry in the United States during the relevant time period, or any of the practices, methods and acts which, in the exercise of reasonable judgment in light of the facts known at the time the decision was made, could have been expected to accomplish the desired result at a reasonable cost consistent with good business practices, reliability, safety and expedition. Good Utility Practice is not intended to be limited to

Unofficial FERC-Generated PDF of 20060301-0381 Received by FERC OSEC 02/23/2006 in Docket#: ER06-548-001

the optimum practice, method, or act to the exclusion of all others, but rather includes all acceptable practices, method, or acts generally accepted in the region. Good Utility Practice shall include, but not be limited to, the Rules and Procedures.

1.13 "GSUs" means generation step-up transformers used to increase the voltage from the Plants to the compatible voltage of the interconnected Transmission System.

1.14 "Hazardous Substances" means:

(A) any petrochemical or petroleum products, oil, radioactive materials, radon gas, asbestos in any form that is or could become friable, urea formaldehyde foam insulation and transformers or other equipment that contain dielectric fluid which may contain levels of polychlorinated biphenyls;

(B) any chemicals, materials, or substances defined as or included in the definition of "hazardous substances," "hazardous wastes," "hazardous materials," "restricted hazardous materials," "extremely hazardous substances," "toxic substances," "contaminants," or "pollutants," or words of similar meaning and regulatory effect; or

(C) any other chemical, material, or substance, exposure to which is prohibited, limited or regulated by applicable Environmental Laws.

1.15 "Miami Fort 6" means the Miami Fort Unit 6 electric generating facility located in North Bend, Ohio.

1.16 "MISO" means the Midwest Independent Transmission System Operator, Inc. or any successor organization.

1.17 "Monthly Fee" means the monthly charge for service under this Agreement, as defined in Article 3.2 of this Agreement.

Unofficial FERC-Generated PDF of 20060301-0381 Received by FERC OSEC 02/23/2006 in Docket#: ER06-548-001

1.18 "NERC" means the North American Electric Reliability Council or any successor organization.

1.19 "OATT" means the applicable open access transmission tariff, as filed with the FERC and as it may be amended from time to time, including any successor tariff, under which the applicable open access transmission service over the Transmission System is provided.

1.20 "Parties" means collectively, CG&E and ULH&P, and their permitted successors and assigns.

1.21 "Party" means either *CG&E* or *ULH&P*, and their permitted successors and assigns.

1.22 "Plants" has the meaning given in the recitals to this Agreement.

1.23 "PSI Energy" means PSI Energy, Inc. and its permitted successors and assigns.

1.24 "RTO" means the applicable regional transmission operator as certified and *approved by FERC.*

1.25 "Release" means release, spill, leak, discharge, dispose of, pump, pour, emit, empty, inject, leach, dump, or allow to escape into or through the environment.

1.26 "Rules and Procedures" means the applicable rules and procedures that CG&E or ULH&P must follow and abide by and which shall govern the operational conditions of the Transmission System, including but not limited to such applicable criteria, rules, procedures and standards of MISO, the RTO, NERC, ECAR, and the National Electrical Safety Code, and any successor entity or organization, as they may be amended from time to time, including those of any entity or successor organization.

1.27 "Transaction" means ULH&P's acquisition of CG&E's ownership interest in the

Unofficial FERC-Generated PDF of 20060301-0381 Received by FERC OSEC 02/23/2006 in Docket#: ER06-548-001

Plants.

1.28 "Transmission System" means the transmission facilities owned, operated or controlled by PSI Energy, or CG&E, including conductors, circuit breakers, switches, transformers and other associated equipment used to control the transfer of energy from one place to another, and shall include any modifications, additions, or upgrades made to those facilities.

1.29 "ULH&P" has the meaning given in the recitals to this Agreement, and includes ULH&P's permitted successors and assigns.

1.30 "Woodsdale" means the Woodsdale Generating Station located in Butler County, Ohio.

ARTICLE 2

FACILITIES OPERATION AND MAINTENANCE

2.1 CG&E shall own, operate and maintain in conformance with Good Utility Practice, and permit ULH&P to utilize for the purpose for which they were utilized by CG&E on the date preceding the Effective Date, at ULH&P's expense as set forth in Article 3 hereof, the following described CG&E Facilities (transformer ratings specified as of Effective Date); viz.:

2.1.1 East Bend: the 700 MVA step-up transformer bank (TB) 2 located in or near Rabbit Hash, Kentucky and identified as such in Exhibit 1 of this Agreement;

2.1.2 *Miami Fort 6: the 180 MVA step-up transformer bank (TB) 6* located in or

Unofficial FERC-Generated PDF of 20060301-0381 Received by FERC OSEC 02/23/2006 in Docket#: ER06-548-001

near North Bend Ohio as identified as such in Exhibit 2 of this Agreement;

2.1.3 Woodsdale: the three 240 MVA step-up transformer banks (TB) 39, 40, and 41 located in Butler County, Ohio, as identified in Exhibit 3 of this Agreement.

2.2 Curtailment or Interruption of Operation of CG&E Facilities and Disconnection of the Plants and CG&E Facilities.

2.2.1 (A) CG&E may not curtail or interrupt ULH&P's use of any of the CG&E Facilities, disconnect any of the Plants from the CG&E Facilities, or disconnect any of the CG&E Facilities from the Transmission System except when such curtailment, interruption or disconnection is necessary under Good Utility Practice, is required under the OATT, or is otherwise required by MISO or the RTO.

(B) With respect to any curtailment, interruption or disconnection permitted under Article 2.2.1(A) of this Agreement:

(1) CG&E agrees that:

(a) the curtailment, interruption or disconnection shall continue only for so long as reasonably necessary under Good Utility Practice, as required under the OATT, or is otherwise required by MISO or the RTO;

(b) any such curtailment, interruption or disconnection shall be made on a not unduly discriminatory basis with respect to other generators interconnected to the Transmission System;

Unofficial FERC-Generated PDF of 20060301-0381 Received by FERC OSEC 02/23/2006 in Docket#: ER06-548-001

(c) when the curtailment, interruption or disconnection must be made under circumstances which do not allow for advance notice, CG&E will notify ULH&P or its agent as soon as practicable of the reasons for the curtailment, interruption or disconnection and, if known, its expected duration consistent with FERC Order No. 2004 and applicable standards of conduct thereafter; and

(d) when the curtailment, interruption or disconnection can be scheduled, CG&E will consult in advance with ULH&P regarding the timing of such scheduling, and notify ULH&P in advance of the expected duration of the curtailment, interruption or disconnection consistent with FERC Order No. 2004 and any applicable standards of conduct thereafter. CG&E agrees to use commercially reasonable efforts to schedule the curtailment, interruption or disconnection to coincide with the scheduled outages of the Plants.

(2) The Parties agree to cooperate and coordinate with each other to the extent necessary in order to restore the CG&E Facilities to their normal operating state, consistent with system conditions and Good Utility Practice.

2.3 Notwithstanding any other provision of this Agreement, this Agreement shall not be interpreted to or construed to, nor shall this Agreement, confer, transfer, convey or otherwise provide ULH&P an ownership, leasehold or any other property interest in the CG&E Facilities.

Unofficial FERC-Generated PDF of 20060301-0381 Received by FERC OSEC 02/23/2006 in Docket#: ER06-548-001

2.4 Consistent with the Rules and Procedures and applicable standards of conduct, and prior to development thereof, CG&E shall consult with ULH&P to develop a non-binding maintenance schedule in accordance with which CG&E shall perform scheduled maintenance on the CG&E Facilities. CG&E shall use commercially reasonable efforts to coordinate the scheduled maintenance of the CG&E Facilities with the scheduled outages of the Plants.

2.5 Unless otherwise agreed to by the Parties, or otherwise required by law or regulation, or Good Utility Practice, CG&E shall not be required at any time to upgrade or otherwise modify the CG&E Facilities; provided however, at ULH&P's sole expense, CG&E agrees to make any additions, modification, or replacements to the CG&E Facilities requested by ULH&P so long as such additions, modifications, or replacements are consistent with Good Utility Practice.

2.6 Inspections

2.6.1 Right to Inspect. Each Party, at its own cost and expense, has the right, but not the obligation, to inspect or observe the operation and maintenance activities, equipment tests, installation, construction, or other modifications to the other Party's equipment, systems or facilities which might reasonably be expected to affect the observing Party's operations. The Party desiring to inspect or observe must provide the other Party advance written notice of such inspection or observation.

2.6.2 Deficiencies and Defects. If the observing Party observes any deficiencies or defects which might reasonably be expected to adversely affect its operations, it may notify the other Party and said Party will be responsible

Unofficial FERC-Generated PDF of 20060301-0381 Received by FERC OSEC 02/23/2006 in Docket#: ER06-548-001

for making any corrections necessitated by Good Utility Practice. Notwithstanding the foregoing, the observing Party shall have no liability whatsoever for failure to give such notice, it being agreed that the Party owning such equipment, systems or facilities will be fully responsible and liable for all such activities, tests, installation, construction or modification.

2.7 Information and Recordkeeping Obligations and Audit Rights

2.7.1 Information Obligations

(A) Consistent with FERC Order No. 2004 and any applicable standards of conduct, either Party may request that the other Party, and that other Party will promptly provide, at the requesting Party's sole cost and expense, such information and data that the requesting Party may reasonably require to: (1) verify costs relating to, in CG&E's case, the Plants, and in ULH&P's case, the CG&E Facilities, including, but not limited to, costs relating to the procurement, operation, maintenance, construction, and installation of any modifications thereto; (2) carry out its responsibilities and enforce its rights under this Agreement; and (3) satisfy any required reporting obligations it may have to any organization issuing criteria, rules, procedures or standards included in the Rules and Procedures, or any agency to which it is required to report.

2.7.2 Recordkeeping Obligations

(A) Transaction Records. Each Party shall keep such records as may be needed to substantiate performance of its obligations under this Agreement.

Unofficial FERC-Generated PDF of 20060301-0381 Received by FERC OSEC 02/23/2006 in Docket#: ER06-548-001

Neither Party shall make use of the records or summary of transactions of the other Party without the express written consent of the other Party, unless such use is permitted by this Agreement or required by law.

(B) Record Retention. Each Party agrees to retain all records under Article 2.7.2(A) normally kept in the course of business and consistent with Good Utility Practice for a minimum of three (3) years from the date of such record.

2.7.3 Audit Rights. Either Party has the right to audit the other Party's accounts and records pertaining to this Agreement, within three (3) years following the calendar year in which such account entry or record is made, at that other Party's offices where such accounts and records are maintained, provided proper notice is given prior to any audit and such audit occurs during normal business hours, and provided further that the audit will be limited to those portions of such accounts and records that relate to services provided under this Agreement for that calendar year. All actual and reasonable non-labor related costs incurred by either Party in connection with an audit shall be borne by the Party undertaking the audit.

2.8 Environmental Compliance and Procedures. The Parties agree to comply with: (A) all applicable Environmental Laws which affect the ability of the Parties to meet their obligations under this Agreement; and (B) all local notification and response procedures required for all applicable environmental and safety manners which affect the ability the Parties to meet their obligations under this Agreement.

ARTICLE 3.

FEES, BILLING AND PAYMENT

Unofficial FERC-Generated PDF of 20060301-0381 Received by FERC OSEC 02/23/2006 in Docket#: ER06-548-001

3.1 Cooperation. Each Party agrees to cooperate with the other Party in attempting to minimize costs under this Agreement. The Parties may agree to other billing/invoicing arrangements, in recognition of the fact that the Parties are affiliates and share an accounting system, and such arrangement shall not constitute an amendment to this Agreement.

3.2 Monthly Fee. During the Term of this Agreement, ULH&P shall pay to CG&E a monthly fee of $161,148 ("Monthly Fee") for use of the CG&E Facilities, such Monthly Fee being intended to enable CG&E to recover its full costs of owning, operating and maintaining the CG&E Facilities.

3.3 Billing Procedures.

3.3.1 Monthly Invoices. With respect to any costs and expenses for which a Party is entitled to be reimbursed under this Agreement, the Party (the "invoicing Party") must submit an invoice to the other Party at the start of each calendar month for the costs for which it is entitled to be reimbursed for the previous period under this Agreement. Each invoice must detail the work, equipment, or services for which the costs were incurred. The invoicing Party shall provide any supporting documentation requested during the course of an audit.

3.3.2 Payment. Payment of invoiced amounts will be due and payable within thirty (30) days of receipt of the invoice or such other time as the Parties mutually agree. If the payment falls on a Saturday, Sunday or federal or state legal holiday, payment shall be made on the next business day. All payments will be made in immediately available funds payable to the invoicing Party or by wire transfer to a bank named by the invoicing Party. If any undisputed portion of any invoice remains unpaid thirty (30) days after the

Unofficial FERC-Generated PDF of 20060301-0381 Received by FERC OSEC 02/23/2006 in Docket#: ER06-548-001

receipt of the invoice or such other time as the Parties mutually agree upon, the invoicing Party will apply to the unpaid balance, and the other Party will pay, a finance charge at the rate of one and one half percent (1.5%) per month but in no event more than the maximum allowed by the law governing the Agreement.

3.3.3 Disputes. If a Party disputes any portion of an invoice, that Party shall make payment of all amounts not in dispute and notify the invoicing Party in writing of any such dispute and the reasons therefor. No invoice may be disputed after such time as a Party's audit rights set forth in Article 2.7.3 of this Agreement have expired. Any billing disputes must be resolved in accordance with Article 8 of this Agreement. In the event of a billing dispute, each Party agrees to continue to perform its duties and obligations under this Agreement as long as the other Party continues to make all payments not in dispute and adheres to the dispute resolution procedures set forth in Article 8 of this Agreement, pending resolution of such dispute. If a Party fails to meet the requirements set forth in the prior sentence and fails to correct or cure such failure within thirty (30) days after receiving written notice from the other Party, then the other Party may, at its option, proceed in accordance with Article 6.5 of this Agreement. Upon the resolution of any billing dispute, any amounts that must be paid to a Party as a result shall be promptly paid, with a finance charge assessed from the date the payment was due to the date payment is made at the rate of one and one half percent (1.5%) per month but in no event more than the maximum allowed by the law governing this Agreement.

3.3.4 Payment Not a Waiver. Payment of invoices by a Party will not relieve that Party from any responsibilities or obligations it has under this Agreement, nor will it

Unofficial FERC-Generated PDF of 20060301-0381 Received by FERC OSEC 02/23/2006 in Docket#: ER06-548-001

constitute a waiver of any claims that Party may have under this Agreement.

3.4 Limitations on ULH&P's Cost Responsibility Obligations. To the extent that the CG&E Facilities' costs for which ULH&P is responsible for under this Agreement are now or at any time in the future to be recovered by CG&E pursuant to the OATT, any other applicable tariff, or from a party other than ULH&P, ULH&P will not be responsible for such costs under this Agreement. If ULH&P has already paid CG&E for such costs, CG&E agrees to refund to ULH&P such amounts no later than thirty (30) days after CG&E rolls such costs in under the OATT, or any other applicable CG&E tariff, or is otherwise reimbursed for such costs by a party other than ULH&P. CG&E agrees to provide to ULH&P such documentation as ULH&P reasonably requires to determine the amounts of such refunds due to ULH&P.

ARTICLE 4.

CONFIDENTIALITY

4.1 General. Unless compelled to disclose by judicial or administrative process or other provisions of law or as otherwise provided for in this Agreement, any information provided by either Party to the other pursuant to this Agreement and either labeled "CONFIDENTIAL" or otherwise designed in writing as confidential will be utilized by the receiving Party solely in connection with the purposes of this Agreement and will not be disclosed by the receiving Party to any third party (or, in the case of CG&E, to any person engaged in the marketing or trading of electric power) other than as expressly contemplated herein and as necessary for the performance of such Party's obligations hereunder. Each Party will hold in confidence any and all such documents and information furnished by the other Party in connection with this Agreement. Notwithstanding the foregoing provisions of this Article 4.1, each Party may release or disclose

Unofficial FERC-Generated PDF of 20060301-0381 Received by FERC OSEC 02/23/2006 in Docket#: ER06-548-001

such information or documents if such disclosure is compelled by judicial or administrative process or other provisions of law, or to: (i) any organization issuing criteria, rules, procedures or standards included in the Rules and Procedures, to the extent consistent with Good Utility Practice; or (ii) the Party's employees, contractors, affiliates and agents (other than any such employees, contractors, affiliates or agents engaged in the marketing or trading of electric energy, capacity or ancillary services) on a need to know basis so long as the Party first advises them of the existence and content of such provisions.

4.2 Exempt Information and Documents. The Parties' confidentiality obligations set forth in Article 4.1 of this Agreement shall not apply to information or documents that are (A) generally available to the public other than as a result of disclosure by a Party (the "disclosing Party") to the other Party; (B) available to a Party on non-confidential basis prior to disclosure by the disclosing Party; or (C) available to a Party on a non-confidential basis from a source other than the disclosing Party, provided that the source is not known and, by reasonable effort, could not be known by the Party receiving such information or documents to be bound by a confidentiality agreement with the disclosing Party or otherwise prohibited from transmitting the information to the Party receiving such information or documents by a contractual, legal or fiduciary obligation.

4.3 Notification. Each Party will promptly notify the other Party if it receives notice or otherwise concludes that the production of any information or documentation furnished by the disclosing Party and subject to Article 4.1 of this Agreement is being sought under any provision of law, but the notifying Party shall have no obligation to oppose or object to any attempt to obtain such production. If the disclosing Party desires to object or oppose such production, it

Unofficial FERC-Generated PDF of 20060301-0381 Received by FERC OSEC 02/23/2006 in Docket#: ER06-548-001

must do so at its own expense.

4.4 Use of Information or Documentation. Each Party may utilize information or documentation furnished by the disclosing Party and subject to Article 4.1 of this Agreement in any proceeding under Article 8 of this Agreement or in an administrative agency or court of competent jurisdiction addressing any dispute arising under this Agreement, subject to a confidentiality agreement with all participants (including, if applicable, any arbitrator) or a protective order.

4.5 Remedies Regarding Confidentiality. The Parties agree that monetary damages by themselves will be inadequate to compensate a Party for the other Party's breach of its obligations under this Article 4. Each Party accordingly agrees that the other Party is entitled to equitable relief, by way of injunction or otherwise, if it breaches or threatens to breach its obligations under this Article 4.

ARTICLE 5.

DAMAGE TO EQUIPMENT, FACILITIES, AND PROPERTY

5.1 ULH&P's Responsibility. Except to the extent caused by CG&E's negligence, intentional misconduct or failure to act in a manner consistent with Good Utility Practice, ULH&P will be responsible for all physical damage to or destruction of property, equipment, or facilities owned by ULH&P or its affiliates other than CG&E regardless of who brings the claim and regardless of who caused the damage, and ULH&P will not seek recovery or reimbursement from CG&E for the damage.

5.2 CG&E's Responsibility. Except to the extent caused by ULH&P's negligence, intentional misconduct, or failure to act in a manner consistent with Good Utility Practice,

Unofficial FERC-Generated PDF of 20060301-0381 Received by FERC OSEC 02/23/2006 in Docket#: ER06-548-001

CG&E will be responsible for all physical damage to or destruction of property, equipment, or facilities owned by CG&E or its affiliates other than ULH&P regardless of who brings the claim and regardless of who caused the damage, and CG&E will not seek recovery or reimbursement from ULH&P for the damage.

5.3 Insurance. The obligations under this Article 5 are not limited in any way by any limitation on either Party's insurance, and each Party waives any subrogation which any of its insurers may have against the other Party.

ARTICLE 6.

TERM, TERMINATION, AND DEFAULT

6.1 Term. This Agreement shall be effective on the date first written above, subject to its approval or acceptance for filing by the FERC as provided for in Article 26 of this Agreement, and subject to the transfer of CG&E's interest in the Plants to ULH&P, and shall continue in effect for thirty (30) years, and, thereafter, for successive one year periods until either Party terminates the Agreement after providing to the other Party at least twelve months' advance written notice of its intent to terminate this Agreement. Notwithstanding the above, this Agreement may be terminated earlier if (A) the Parties mutually agree; (B) this Agreement is terminated earlier as provided for in this Agreement; or (C) ULH&P terminates the Agreement after providing CG&E at least sixty (60) days' advance written notice of intent to terminate this Agreement.

6.2 Effect of Expiration or Termination of Agreement on Liabilities and Obligations. Expiration or termination of this Agreement shall not relieve ULH&P or CG&E of any of its liabilities and obligations arising hereunder prior to the date expiration or termination becomes

Unofficial FERC-Generated PDF of 20060301-0381 Received by FERC OSEC 02/23/2006 in Docket#: ER06-548-001

effective.

6.3 Effectiveness of Certain Provisions After Expiration or Termination of Agreement. The applicable provisions of this Agreement will continue in effect after expiration or early termination hereof to the extent necessary to provide for final billings, billing adjustments and the determination and enforcement of liability and indemnification obligations arising from acts or events that occurred while this Agreement was in effect. These provisions include, without limitation, Article 9 ("Insurance"), Article 12 ("Indemnification"), and Article 20 ("Limitation of Liability") of this Agreement.

6.4 Default. A Party will be in default under this Agreement if, at any time:

(A) the Party fails to make any payment due the other Party in accordance with this Agreement, and does not make such payment to the other Party within thirty (30) days after receiving written notice from the other Party of such failure;

(B) (1)(a) the Party fails in any material respect to comply with, observe or perform any term or condition of this Agreement; (b) any representation or warranty made herein by the Party fails to be true and correct in all material respects; (c) the Party abandons its work or the facilities contemplated in this Agreement; or (d) the Party fails to provide to the other Party reasonable written assurance of its ability to perform fully and completely any of its material duties and responsibilities under this Agreement within thirty (30) days after receiving any reasonable request for such assurances from the other Party; and

(2)(a) the Party fails to correct or cure the situation within thirty (30) days after receiving written notice thereof from the other Party; or (b) excluding those events set forth in Articles 6.4(A) and 6.4(C), if the situation cannot be completely corrected or cured within such thirty day

Unofficial FERC-Generated PDF of 20060301-0381 Received by FERC OSEC 02/23/2006 in Docket#: ER06-548-001

period, the Party fails to either (i) commence diligent efforts to correct or cure the situation within such thirty day period or (ii) completely correct or cure the situation within sixty (60) days after receiving written notice thereof from the other Party; or

(C) (1) a receiver or liquidator or trustee of the Party or of any of its property is appointed by a court of competent jurisdiction, and such receiver, liquidator or trustee is not discharged within sixty (60) days;

(2) by decree of such court, the Party is adjudicated bankrupt or insolvent or any substantial part of its property is sequestered, and such decree continues undischarged and unstayed for a period of sixty (60) days after the entry thereof;

(3) a petition to declare bankruptcy or to reorganize the Party pursuant to any provision of any federal or state bankruptcy law now in effect or as may hereafter be amended (collectively, "Bankruptcy Laws") is filed against the Party and is not dismissed within sixty (60) days after such filing;

(4) the Party files a voluntary petition in bankruptcy under any provision of any Bankruptcy Law;

(5) the Party consents to the filing of any bankruptcy or reorganization petition against it under any Bankruptcy Law;

(6) the Party makes an assignment for the benefit of its creditors; or

(7) the Party consents to the appointment of a receiver, trustee or liquidator of the Party or all or any part of its property.

6.5 Remedies of Parties Upon Default. Subject to Article 8 of this Agreement, if a Party defaults under this Agreement in accordance with Article 6.4 of this Agreement, the other

Unofficial FERC-Generated PDF of 20060301-0381 Received by FERC OSEC 02/23/2006 in Docket#: ER06-548-001

Party may, at its option, (A) act to terminate this Agreement by providing written notice of termination to the defaulting Party, or (B) take whatever action at law or in equity as may appear necessary or desirable to enforce the performance or observance of any rights, remedies, obligations, agreements, or covenants under this Agreement. Any termination sought under this Article 6.5 shall not take effect until FERC either authorizes any request by either Party seeking termination of this Agreement or accepts any written notice of termination.

6.6 Performance of Other Party's Obligations. If either Party (the "defaulting Party") fails to carry out its obligations under this Agreement and such failure could reasonably be expected to have a material adverse impact on the Transmission System, the CG&E Facilities, the ULH&P Facilities, the Plants, or the regional network, the other Party, following at least ten (10) days' advance written notice (except in cases of Emergencies, in which case only such notice as is reasonably practicable in the circumstances is required), may, but will not be obligated to, perform the obligations of the defaulting Party (including, without limitation, maintenance obligations), in which case the defaulting Party will, upon presentation of an invoice therefor, reimburse the other Party for all actual and reasonable costs and expenses incurred by it in performing said obligations of the defaulting Party (including, without limitation, costs associated with its employees and the costs of appraisers, engineers, environmental consultants and other experts retained by said Party in connection with performance of the defaulting Party's obligations), together with a finance charge on all such amounts of one and one half percent (1.5%) per month but in no event more than the maximum allowed by the law governing this Agreement.

6.7 Remedies Cumulative. Subject to Article 8 of this Agreement, no remedy

Unofficial FERC-Generated PDF of 20060301-0381 Received by FERC OSEC 02/23/2006 in Docket#: ER06-548-001

conferred by any of the provisions of this Agreement is intended to be exclusive of any other remedy and each and every remedy shall be cumulative and shall be in addition to every other remedy given hereunder or now or hereafter existing at law or in equity or by statute or otherwise. The election of any one or more remedies shall not constitute a waiver of the right to pursue other available remedies.

ARTICLE 7.

REPRESENTATIONS

7.1 Representations of CG&E. CG&E represents and warrants the following:

7.1.1 CG&E is a corporation duly organized, validly existing and in good standing under the laws of the State of Ohio, and it has the requisite corporate power and authority to own its properties, and to carry on its business as now being conducted.

7.1.2 CG&E has the requisite corporate power and authority to execute and deliver this Agreement and to carry out the actions required of it by this Agreement. The execution and delivery of this Agreement and the actions it contemplates have been duly and validly authorized by CG&E, and no other corporate proceedings on the part of CG&E are necessary to authorize this Agreement or to consummate the transactions contemplated hereby. This Agreement has been duly and validly executed and delivered by CG&E and constitutes a legal, valid and binding agreement of CG&E enforceable against CG&E in accordance with its terms, subject to the acceptance of this Agreement by the FERC.

7.1.3 The CG&E Facilities are owned by CG&E, and operated or controlled by CG&E. It is further acknowledged that CG&E has the authorization to grant ULH&P use of the CG&E Facilities consistent with Good Utility Practice or will obtain, with the assistance of ULH&P,

Unofficial FERC-Generated PDF of 20060301-0381 Received by FERC OSEC 02/23/2006 in Docket#: ER06-548-001

such authorization as necessary prior to the transfer of the Plants to ULH&P.

7.1.4 CG&E has obtained or will use its reasonable best efforts to timely obtain all approvals of, and has given or will use its reasonable best efforts to give all notices to, any public authority that are required for CG&E to execute, deliver and perform its obligations under this Agreement.

7.1.5 To CG&E's knowledge, it is not in violation of any applicable law, statute, order, rule or regulation promulgated by, or judgment, decree, writ, injunction, or award rendered by, any federal, state, or local governmental court or agency which, individually or in the aggregate, would adversely affect such entity's entering into or performance of its obligations under this Agreement. Such entity's entering into and performance of its obligations under this Agreement will not give rise to any default under any agreement to which either such entity is a party.

7.1.6 CG&E will comply with all applicable laws, rules, regulations, codes, and standards of all federal, state, and local governmental agencies having jurisdiction over either such entity or the transactions under this Agreement and with respect to which failure to comply could reasonably be expected to have a material adverse effect on either Party's performance under this Agreement.

7.1.7 CG&E shall do such other and further acts and things, and shall execute and deliver such instruments and documents, as ULH&P may reasonably request from time to time in furtherance of the purposes of this Agreement.

7.2 Representations of ULH&P. ULH&P represents and warrants the following:

7.2.1 ULH&P is corporation duly organized, validly existing, and in good standing under the laws of the Commonwealth of Kentucky, and ULH&P has the requisite corporate

Unofficial FERC-Generated PDF of 20060301-0381 Received by FERC OSEC 02/23/2006 in Docket#: ER06-548-001

power and authority to own its properties, and to carry on its business as now being conducted.

7.2.2 ULH&P has the requisite corporate power and authority to execute and deliver this Agreement and to carry out the actions required of it by this Agreement. The execution and delivery of this Agreement and the actions it contemplates have been duly and validly authorized by ULH&P, and no other corporate proceedings on the part of ULH&P are necessary to authorize this Agreement or to consummate the transactions contemplated hereby. This Agreement has been duly and validly executed and delivered by ULH&P and constitutes a legal, valid and binding agreement of ULH&P enforceable against it in accordance with its terms, subject to the acceptance of this Agreement by the FERC.

7.2.3 ULH&P has obtained or will obtain all approvals of, and has given or will give all notices to, any public authority that are required for ULH&P to execute, deliver and perform its obligations under this Agreement.

7.2.4 To ULH&P's knowledge, it is not in violation of any applicable law, statute, order, rule, or regulation promulgated by, or judgment, decree, writ, injunction, or award rendered by, any federal, state, or local governmental court or agency which, individually or in the aggregate, would adversely affect ULH&P's entering into or performance of its obligations under this Agreement. ULH&P's entering into and performance of its obligations under this Agreement will not give rise to any default under any agreement to which it is a party.

7.2.5 ULH&P will comply with all applicable laws, rules, regulations, codes, and standards of all federal, state, and local governmental agencies having jurisdiction over ULH&P or the transactions under this Agreement and with respect to which failure to comply could reasonably be expected to have a material adverse effect on either Party's performance under this

Unofficial FERC-Generated PDF of 20060301-0381 Received by FERC OSEC 02/23/2006 in Docket#: ER06-548-001

Agreement.

7.2.6 ULH&P shall do such other and further acts and things, and shall execute and deliver such instruments and documents, as CG&E may reasonably request from time to time in furtherance of the purposes of this Agreement.

7.3 Representations of Both Parties. The representations in Articles 7.1 and 7.2 of this Agreement shall continue in full force and effect for the term of this Agreement.

ARTICLE 8.

DISPUTE RESOLUTION

8.1 Actions Prior to Arbitration

8.1.1 Parties to Address First. Any dispute, disagreement, or claim arising out of or concerning this Agreement must first be addressed by the Parties.

8.1.2 Notice of Dispute. When a Party believes that there is such a dispute, disagreement or claim, that Party may initiate the dispute resolution procedures by giving the other Party written notice of the dispute, disagreement or claim.

8.1.3 Good Faith Negotiations; Applicability of Arbitration. Representatives of the Parties must attempt to negotiate in good faith to resolve such dispute, disagreement or claim within ten (10) days after notice of the dispute, disagreement or claim has been given. If such representatives are unable to satisfactorily resolve such dispute, disagreement or claim, they must refer the matter to senior representatives of each Party with the authority to settle the dispute, disagreement or claim, which such senior representatives shall meet at a mutually acceptable time and place to attempt to resolve the dispute, disagreement or claim. If the senior representatives have not resolved such dispute, disagreement or claim within twenty (20) days

Unofficial FERC-Generated PDF of 20060301-0381 Received by FERC OSEC 02/23/2006 in Docket#: ER06-548-001

after notice of the dispute, disagreement or claim has been given, then the Parties may, upon mutual agreement, submit such dispute, disagreement or claim (including the issue of whether such dispute, disagreement or claim is arbitrable) to binding arbitration.

8.2 Arbitration Procedures. Any arbitration shall be conducted by a single neutral arbitrator appointed by the Parties under the Commercial Arbitration Rules of the American Arbitration Association ("Arbitration Rules") in effect at the time a notice of arbitration is made. The arbitrator shall be selected pursuant to the Arbitration Rules. The arbitrator must be knowledgeable in matters that are the subject of the dispute. The arbitrator shall conduct the arbitration in accordance with the Arbitration Rules in effect at the time arbitration is initiated under this Article 8; provided, however, that, in the event of a conflict between the Arbitration Rules and the terms and provisions of this Article 8, the terms and provisions of this Article 8 shall govern.

8.3 Authority of Arbitrator

8.3.1 No Authority to Modify Agreement. The arbitrator shall have the authority only to interpret and apply the terms and conditions of this Agreement and shall have no power to modify or change any such terms or conditions.

8.3.2 Compliance with Law. The arbitrator shall be required to follow any and all applicable federal, state, or local laws and regulations.

8.3.3 Remedies

(A) The arbitrator may not award punitive damages, multiple damages, or any other damages which are not measured by the prevailing Party's actual damages.

(B) Any award of damages must be determined, limited and controlled by the

Unofficial FERC-Generated PDF of 20060301-0381 Received by FERC OSEC 02/23/2006 in Docket#: ER06-548-001

limitation of damages provision of this Agreement.

(C) The arbitrator may, in his or her discretion, award pre award and post award interest on any damages awarded; provided, however that the rate of interest may not exceed a rate equal to the lower of one and one half percent (1.5%) per month or the maximum rate allowed by the law governing this Agreement.

8.4 Timing and Nature of Decision

8.4.1 Timing. Unless otherwise agreed upon by the Parties, the arbitrator must render a decision as quickly as practicable under the circumstances.

8.4.2 Binding on Parties; Challenges. The decision must be in writing and contain the reasons for the decision. The decision and award of the arbitrator shall be final and binding upon the Parties, their successors, and assigns; provided, however, that such decision and award may be challenged solely on the grounds that the conduct of the arbitrator, or the decision and award itself, violated the standards set forth in the Federal Arbitration Act. Judgment upon the award rendered by the arbitrator may be entered in any court having jurisdiction.

8.4.3 Filing With FERC. The decision must also be filed with FERC if it affects FERC jurisdictional rates, terms and conditions of service or facilities.

8.5 Location of Arbitration. Any arbitration conducted hereunder must be conducted in Indianapolis, Indiana, unless the Parties mutually agree upon another location.

8.6 Costs. Each Party shall be responsible for its own costs and expenses, including attorneys' fees, incurred during the arbitration and for fifty percent (50%) of the cost of the arbitrator.

8.7 Confidentiality. The existence, contents, or results of any arbitration proceeding

Unofficial FERC-Generated PDF of 20060301-0381 Received by FERC OSEC 02/23/2006 in Docket#: ER06-548-001

conducted under this Article 8 may not be disclosed without the prior written consent of both Parties; provided, however, that either Party may (A) make such disclosures as may be necessary to (1) satisfy regulatory obligations to any regulatory authority having jurisdiction or (2) seek or obtain from a court of competent jurisdiction judgment on, confirmation or vacation of an arbitration award; (B) inform its lenders, affiliates, auditors, and insurers, as necessary, under pledge of confidentiality; and (C) consult with experts as required in connection with the arbitration proceeding under pledge of confidentiality. If either Party seeks preliminary injunctive relief from any court to preserve the status quo or avoid irreparable harm pending arbitration, the Parties agree to use commercially reasonable efforts to keep the court proceedings confidential, to the maximum extent permitted by the law.

8.8 FERC Jurisdiction Over Certain Disputes

8.8.1 Nothing in this Agreement shall preclude, or be construed as precluding, either Party from filing a petition or complaint with the FERC with respect to any arbitrable claim over which the FERC has jurisdiction; provided, however, that neither Party may file a petition or claim at FERC with respect to an issue which has been submitted to binding arbitration pursuant to Article 8.1.3 of this Agreement.

8.8.2 If the FERC determines that it has no jurisdiction or declines to resolve all or a portion of a claim, that portion of the claim may be resolved through arbitration as provided for in this Article 8. Any decision, finding of fact, or order of the FERC shall be final and binding, subject to the judicial review provided for under the Federal Power Act.

8.8.3 The arbitrator shall have no authority to modify, and shall be conclusively bound by, any decision, finding of fact, or order of the FERC; provided, however, that, to the extent that

Unofficial FERC-Generated PDF of 20060301-0381 Received by FERC OSEC 02/23/2006 in Docket#: ER06-548-001

a decision, finding of fact or order of the FERC does not provide a final or complete remedy to the Party seeking relief, such Party may proceed to arbitration under this Article 8, subject to the FERC decision, finding of fact, or order.

8.9 Preliminary Injunctive Relief. Nothing in this Article 8 precludes, or is to be construed as precluding, either Party from resorting to a court of competent jurisdiction for the purpose of securing a temporary or preliminary injunction to preserve the status quo or avoid irreparable harm pending the resolution of a dispute pursuant to this Article 8.

ARTICLE 9.

INSURANCE

9.1 General. Each Party agrees to maintain, at its own cost and expense, in full force and effect throughout the term of this Agreement, the types of and minimum dollar amounts of insurance or self insurance coverage as would be carried by similar companies in similar circumstances.

9.2 Certificates of Insurance; Copies of Policies. Each Party agrees to provide the other Party with certificates of insurance evidencing the insurance coverage or self insurance as set forth in Article 9.1 of this Agreement. Each Party agrees to provide the other copies of all policies or evidence of self insurance upon request.

9.3 Waiver of Subrogation. Each Party waives any right to subrogation under its respective insurance policies for any liability each has agreed to assume under this Agreement. Evidence of this requirement shall be noted on all certificates of insurance.

9.4 Failure to Comply. Failure of either Party to comply with the above insurance

Unofficial FERC-Generated PDF of 20060301-0381 Received by FERC OSEC 02/23/2006 in Docket#: ER06-548-001

terms and conditions, or the complete or partial failure of an insurance carrier to fully protect and indemnify the other Party or its affiliates, or the inadequacy of the insurance shall not in any way lessen or affect the obligations or liabilities of each Party to the other.

ARTICLE 10.

NOTICES

10.1 General. Except for notices of occurrences requiring prompt attention, all notices required or permitted to be given under this Agreement must be in writing and delivered by (A) hand; (B) registered or certified first class mail, postage prepaid, return receipt requested; (C) facsimile transmission; or (D) a reputable overnight courier which provides evidence of delivery or refusal. All such notices shall be addressed as follows:

To CG&E: Vice President
Electric System Operations
Cinergy Services, Inc.
139 East Fourth Street
Cincinnati, OH 45202
Tel: 513 287 3455
Fax: 513 287 3812

To ULH&P: In the case of notices pertaining to curtailment, interruption or disconnection, notice will be provided to the manager of the respective affected Plant, as follows:

East Bend:

Plant Manager
East Bend Electric Generating Station
139 East Fourth Street, EG373
Cincinnati, OH 45202
Tel: 513 467 4811
Fax: 513 419 5676

Miami Fort 6:

Plant Manager
Miami Fort Electric Generating Station

Unofficial FERC-Generated PDF of 20060301-0381 Received by FERC OSEC 02/23/2006 in Docket#: ER06-548-001

139 East Fourth Street, EG376
Cincinnati, OH 45202
Tel: 513 467 4936
Fax: 513 467 4931

Woodsdale:

Manager, CT Fleet Portfolio
Woodsdale Electric Generating Station
139 East Fourth Street, EG379
Cincinnati, OH 45202
Tel: 513 467 5351
Fax: 513 467 5399

All other notices to ULH&P shall be provided to:

Vice President
Power Generation
139 East Fourth Street, EM402
Cincinnati, OH 45201
Tel: 513 287 3485
Fax: 513 287 2823

10.2 Changes. Either Party may change its address for notices or the person(s) to whom notices should be given by notice to the other Party in the manner provided above.

10.3 Emergencies. Notwithstanding Article 10.1 of this Agreement, any notice concerning a system Emergency or other occurrence requiring prompt attention may be made by telephone or in person, provided that such notice is confirmed in writing promptly thereafter.

10.4 Authority of Party Representatives. The representatives noted in Article 10.1 of this Agreement, or their designees (including points of contact), shall be authorized to act on behalf of the Parties, and their instructions, requests, and decisions will be binding upon the Parties as to all matters pertaining to this Agreement and the performance of the Parties hereunder. Only these representatives shall have the authority to commit funds or make binding

Unofficial FERC-Generated PDF of 20060301-0381 Received by FERC OSEC 02/23/2006 in Docket#: ER06-548-001

obligations on behalf of the Parties. The representatives shall be responsible for tracking work, costs, schedules and all other matters related to this Agreement, and for the performance of any third parties.

10.5 Points of Contact. Each Party representative noted in Article 10.1 of this Agreement shall designate a person to act as a twenty four (24) hour point of contact, which such person shall have knowledge and control of that Party's facilities. The point of contact shall be the day to day method of communicating any and all changes in operational status and operational issues and concerns relating to each Party's facilities.

ARTICLE 11.

FORCE MAJEURE

11.1 General. Neither Party shall be considered to be in default or breach of this Agreement or liable in damages or otherwise responsible to the other Party for any delay in or failure to carry out any of its obligations under this Agreement if, and only to the extent that, the Party is unable to perform or is prevented from performing by an event of force majeure. Notwithstanding the foregoing sentence, neither Party may claim force majeure for any delay or failure to perform or carry out any provision of this Agreement to the extent that such Party has been negligent or engaged in intentional misconduct and such negligence or misconduct contributed to that Party's delay or failure to perform or carry out its duties and obligations under this Agreement. A Party's exemption from liability will extend for the period of time necessitated by the event of force majeure. All performance obligations affected by the event of force majeure will be extended for a period equal to the length of the resulting delay.

Unofficial FERC-Generated PDF of 20060301-0381 Received by FERC OSEC 02/23/2006 in Docket#: ER06-548-001

11.2 Force Majeure Defined. The term "force majeure" means those causes beyond the reasonable control of the Party claiming force majeure and which, through the exercise of Good Utility Practice and reasonable care, that Party could not have avoided, including, but not limited to, the following: flood; lightning strikes; earthquake; fire; epidemic; war; invasion; riot; civil disturbance; sabotage; explosion; insurrection; military or usurped power; strikes affecting more than one locality; labor dispute; action of any court or governmental authority, or any civil or military authority de facto or de jure; change in law; act of God or the public enemy; or any other event or cause of a similar nature beyond a Party's reasonable control. Mere economic hardship of either Party does not constitute Force Majeure.

11.3 Procedures. A Party claiming force majeure must:

(A) give written notice to the other Party of the occurrence of a force majeure event no later than three (3) business days after learning of the occurrence of such an event;

(B) use due diligence to resume performance or the provision of service hereunder as soon as practicable;

(C) take all commercially reasonable actions to correct or cure the force majeure event, provided, however, that settlement of strikes or other labor disputes are completely within the sole discretion of the Party affected by such strike or labor dispute;

(D) exercise all reasonable efforts to mitigate or limit damages to the other Party; and

(E) provide prompt written notice to the other Party of the cessation of the adverse effect of the force majeure event on its ability to perform under this Agreement.

ARTICLE 12.

INDEMNIFICATION

Unofficial FERC-Generated PDF of 20060301-0381 Received by FERC OSEC 02/23/2006 in Docket#: ER06-548-001

12.1 Indemnification. Subject to Articles 5.1, 5.2 and 20.1 of this Agreement, each Party agrees to indemnify, release and hold the other Party and its affiliates, trustees, officers, directors, agents, and employees harmless from and against any and all damages, costs (including attorneys' fees), suits, cause of action, fines, penalties or liabilities, in tort, contract or otherwise, of any kind and nature whatsoever brought by or associated with claims involving a third party, and any other obligation to third parties (collectively, "Liabilities") resulting from, or claimed to have arisen as a result of any act or omission of the indemnifying Party and/or its officers, directors, employees, agents and subcontractors arising out of or connected with the indemnifying Party's performance or breach of this Agreement or the indemnifying Party's exercise of its rights hereunder, except to the extent that such Liabilities resulted from the negligence, intentional wrongdoing, or willful misconduct of the Party seeking indemnification. Each Party hereby waives recourse against the other Party and its affiliates, trustees, officers, directors, agents, and employees for, and releases the other Party and affiliates, trustees, officers, directors, agents, and employees from, any and all Liabilities for or arising from damage to its property or from damage or injury to person(s) due to performance under this Agreement by such other Party, except to the extent such damage or injury resulted from the other Party's negligence, intentional wrongdoing, or willful misconduct.

12.2 Conditions. Each Party's obligations with respect to claims and suits covered by this Article 12 are subject to the conditions that (A) the Party seeking indemnification must give the indemnifying Party reasonably prompt notice of any such claim or suit; (B) the Party seeking indemnification must cooperate in the defense of any such claim or suit, the costs of which are to be borne by the indemnifying Party; and (C) the indemnifying Party has sole control of the

Unofficial FERC-Generated PDF of 20060301-0381 Received by FERC OSEC 02/23/2006 in Docket#: ER06-548-001

defense of such claim or suit to the extent of the indemnifying Party's liability for any such claim or suit.

12.3 Consent. Neither Party may settle, compromise, decline to appeal or otherwise dispose of any action, proceeding, or claim with respect to which indemnification is sought without the prior written consent of the other Party. In the event that any claim is settled, each Party agrees to not publicize the settlement and to make every effort to ensure that any settlement agreement contains a non-disclosure provision; provided, however, that, if required by law, either Party may disclose the existence or content of the settlement agreement.

12.4 Survival. Each Party's indemnification obligation will survive expiration or early termination of this Agreement.

ARTICLE 13.

INTEGRATION

13.1 Entire Agreement. This Agreement sets forth the entire agreement and understanding of ULH&P and CG&E and supersedes all prior oral and written understandings and agreements, oral or written, between ULH&P and CG&E with respect to the specific subject matter addressed herein.

ARTICLE 14.

RELATIONSHIP OF PARTIES

14.1 Relationship of Parties. Nothing in this Agreement is to be construed or deemed to cause, create, constitute, give effect to, or otherwise recognize CG&E and ULH&P to be partners, joint venturers, employer and employee, principal and agent, or any other business association, with respect to any matter.

Unofficial FERC-Generated PDF of 20060301-0381 Received by FERC OSEC 02/23/2006 in Docket#: ER06-548-001

14.2 No Authority to Act for Other Party. Unless otherwise agreed to in writing signed by both Parties, neither Party shall have any authority to create or assume in the other Party's name or on its behalf any obligation, express or implied, or to act or purport to act as the other Party's agent or legally empowered representative for any purpose whatsoever.

14.3 No Liability for Acts of Other Party. Neither Party shall be liable to any third party in any way for any engagement, obligation, contract, representation, or for any negligent act or omission of the other Party, except as expressly provided for herein.

ARTICLE 15.

WAIVER

15.1 Waiver Permitted. Except as otherwise provided for in this Agreement, the failure of either Party to comply with any obligation, covenant, agreement, or condition herein may be waived by the Party entitled to the benefits thereof only by a written instrument signed by the Party granting such waiver.

15.2 Limited Nature of Waivers. Any waiver granted by a Party may not operate as a waiver of any other failure of the Party granted a waiver to comply with any obligation, covenant, agreement, or condition herein.

ARTICLE 16.

AMENDMENT

16.1 CG&E Section 205 Rights. Notwithstanding any provision in this Agreement to the contrary, CG&E may unilaterally make application to the FERC under Section 205 of the Federal Power Act and pursuant to FERC's rules and regulations promulgated thereunder for a change in any rate, term, condition, charge, classification of service, rule or regulation under or

Unofficial FERC-Generated PDF of 20060301-0381 Received by FERC OSEC 02/23/2006 in Docket#: ER06-548-001

related to this Agreement.

16.2 ULH&P Section 206 Rights. Notwithstanding any provision in this Agreement to the contrary, ULH&P may exercise its rights under Section 206 of the Federal Power Act and pursuant to FERC's rules and regulations promulgated thereunder with respect to any rate, term, condition, charge, classification of service, rule or regulation for any services provided under this Agreement over which the FERC has jurisdiction.

16.3 Amendments. Except as provided for in Articles 16.1 and 16.2 of this Agreement, this Agreement may only be modified, amended, changed, or supplemented in writing signed by ULH&P and CG&E.

ARTICLE 17.

SUCCESSORS, ASSIGNS,

AND THIRD PARTY BENEFICIARIES

17.1 Binding On Parties, Successors, and Assigns. This Agreement shall be binding upon and inure to the benefit of the Parties hereto and their successors and assigns. No person or Party shall have any rights, benefits or interests, direct or indirect, arising from this Agreement except the Parties hereto, their successors and authorized assigns. The Parties expressly disclaim any intent to create any rights in any person or party as a third party beneficiary to this Agreement.

17.2 Assignment. Neither Party shall voluntarily assign this Agreement, nor assign its rights nor delegate its duties under this Agreement, or any part of such rights or duties, without the written consent of the other Party, which consent shall not be unreasonably withheld. Any such assignment or delegation made without such written consent shall be null and void;

Unofficial FERC-Generated PDF of 20060301-0381 Received by FERC OSEC 02/23/2006 in Docket#: ER06-548-001

provided, however, that such written consent shall not be required: (i) in connection with the sale, merger, or transfer of all or a substantial portion of the properties of a Party (and, in the case of CG&E, its transmission system and the CG&E Facilities), so long as the assignee in such a sale, merger, or transfer assumes directly all of the assignor's rights, duties, obligations and liabilities arising under this Agreement; (ii) for CG&E to assign this Agreement to any wholly-owned direct or indirect subsidiary of Cinergy Corp., a Delaware corporation, so long as such subsidiary assumes directly all of the assignor's rights, duties, obligations and liabilities arising under this Agreement; (iii) for CG&E to assign this Agreement to any purchaser of all or a substantial portion of the Transmission System, so long as the purchaser assumes directly all of the assignor's rights, duties, obligations and liabilities arising under this Agreement; or (iv) for ULH&P to assign this Agreement to any purchaser of all or a substantial portion of the Plants, so long as the purchaser assumes directly all of the assignor's rights, duties, obligations and liabilities arising under this Agreement.

17.3 Financing Parties. Notwithstanding the foregoing, ULH&P may assign this Agreement without CG&E's prior consent to any future owner of the Plants, as long as the future owner assumes directly all of ULH&P's rights, duties, obligations and liabilities under this Agreement. In addition and notwithstanding the foregoing, ULH&P or its assignee may assign this Agreement to the persons, entities or institutions providing financing or refinancing for the development, design, construction or operation of the Plants and, if ULH&P provides notice thereof to CG&E, CG&E shall provide notice and reasonable opportunity for such lenders to cure any default under this Agreement. CG&E shall, if requested by such lenders, execute its standard documents and certificates as may be requested with respect to the assignment and

Unofficial FERC-Generated PDF of 20060301-0381 Received by FERC OSEC 02/23/2006 in Docket#: ER06-548-001

status of this Agreement, provided such documents do not change the rights of CG&E under this Agreement except with respect to providing notice and a reasonable opportunity to cure defaults. In the event of any foreclosure by such lenders, the purchasers at such foreclosure or any subsequent purchaser shall, upon request, be entitled to the rights and benefits of (and be bound by) this Agreement so long as it is an entity entitled to interconnect with the Transmission System.

17.4 Release of Assigning Party. Any assignment authorized as provided in Article 17.2 or Article 17.3 of this Agreement will not operate to relieve the Party assigning this Agreement of any of its rights, interests, duties, obligations or liabilities hereunder or of the responsibility of full compliance with the requirements of this Agreement unless (A) the other Party consents, if such consent is required under such sections, in which case such consent shall not be unreasonably withheld, and (B) the assignee agrees in writing to be bound by all of the duties, obligations and liabilities of the assigning Party provided for in this Agreement.

ARTICLE 18.

SUBCONTRACTORS

18.1 Use of Subcontractors or Agents Permitted. Nothing in this Agreement will prevent either Party from utilizing the services of subcontractors or agents as it deems appropriate; provided, however, that all such subcontractors and agents comply with the terms and conditions of this Agreement.

18.2 Retaining Party to Remain Responsible. The creation of any subcontract or agency relationship shall not relieve the retaining Party of any of its obligations under this Agreement. Each Party shall be fully responsible to the other Party for the acts or omissions of

Unofficial FERC-Generated PDF of 20060301-0381 Received by FERC OSEC 02/23/2006 in Docket#: ER06-548-001

any subcontractor or agent it hires as if no subcontract or agency relationship had been made. Any obligation imposed by this Agreement upon either Party, where applicable, shall be equally binding upon and construed as having application to any subcontractor or agent.

18.3 Liability for Subcontractors or Agents. Each Party will be liable for, indemnify, and hold harmless the other Party, its affiliates, and their officers, directors, employees, agents, and assigns from and against any and all claims, demands, or actions from its subcontractors or agents; and will be responsible for all costs, expenses, and legal fees associated therewith and all judgments, decrees, and awards rendered therein.

18.4 No Third Party Beneficiary. No subcontractor or agent is intended to be or will be deemed a third party beneficiary of this Agreement.

18.5 No Limitation by Insurance. The obligations under this Article 18 are not limited in any way by any limitation on subcontractor's or agent's insurance.

ARTICLE 19.

LABOR DISPUTES

19.1 Notice. Each Party agrees to promptly notify the other, orally and then in writing, of any labor dispute which may reasonably be expected to affect the operations of the other Party.

ARTICLE 20.

LIMITATION OF LIABILITY

20.1 No Consequential Damages. Neither Party shall be liable to the other Party or its parent, subsidiaries, affiliates, officers, directors, agents, employees, successors, or assigns for incidental, punitive, special, indirect, multiple, or consequential damages (including attorneys'

Unofficial FERC-Generated PDF of 20060301-0381 Received by FERC OSEC 02/23/2006 in Docket#: ER06-548-001

fees, litigation costs, and claims for lost profits) connected with or resulting from performance or non-performance of this Agreement.

20.2 Application; Survival. The limitation of liability provided for in this Article 20 will apply regardless of fault, and will survive expiration or early termination of this Agreement.

ARTICLE 21.

GOVERNING LAW AND INTERPRETATION

21.1 Applicable Law. This Agreement and all rights, obligations, and performances hereunder are subject to all applicable federal and state laws and to all duly promulgated orders and other duly authorized action of any governmental authority with competent jurisdiction.

21.2 Governing Law. This Agreement is to be governed by federal law where applicable, and when not in conflict with or preempted by federal law, this Agreement shall be governed by and construed in accordance with the laws of the State of Ohio without regard to its conflict of laws principles. Except for those matters which are brought to the FERC or which are resolved through arbitration, any action arising out of or concerning this Agreement must be brought in the courts of the State of Ohio.

21.3 No Presumption. This Agreement shall be construed without regard to any presumption or other rule requiring construction against the Party causing this Agreement to be drafted.

21.4 Conflicts Between Main Body of Agreement and Exhibits. In the event of a conflict between the main body of this Agreement and any exhibit hereto, the terms of the main body of this Agreement shall govern.

ARTICLE 22.

Unofficial FERC-Generated PDF of 20060301-0381 Received by FERC OSEC 02/23/2006 in Docket#: ER06-548-001

HEADINGS AND CAPTIONS

22.1 No Effect on Interpretation. The headings and captions contained in this Agreement are for convenience only and shall not affect the interpretation of this Agreement.

ARTICLE 23.

COUNTERPARTS

23.1 Counterpart Execution Permitted. This Agreement may be executed in separate or multiple counterparts, all of which shall evidence a single agreement.

ARTICLE 24.

SEVERABILITY

24.1 Severable Nature of Agreement. If any provision of this Agreement or the application thereof to any person or circumstances is, to any extent, held to be invalid or unenforceable, the remainder of this Agreement, or the application of such provision to persons or circumstances other than those as to which it is held to be invalid or unenforceable, will not be affected thereby, and each provision of this Agreement shall be valid and enforceable to the fullest extent permitted by law.

ARTICLE 25.

OPERATING COMMITTEE

25.1 Representatives. The Parties shall establish a committee of authorized representatives to be known as the Operating Committee. Each of the Parties shall designate, in writing delivered to the other Party, the person who is to act as its representative on said committee (and the person or persons who may serve as alternate or alternates whenever such

Unofficial FERC-Generated PDF of 20060301-0381 Received by FERC OSEC 02/23/2006 in Docket#: ER06-548-001

representative is unable to act). Such representatives and alternate or alternates shall each be persons familiar with the facilities of the Party he or she represents, and each shall be fully authorized to cooperate on behalf of the Party they represent in performing the functions delegated to the Operating Committee.

25.2 Duties of Operating Committee. The Operating Committee shall perform the following:

(A) All functions pertaining to the coordination of maintenance of the Plants, the CG&E Facilities, and the Transmission System.

(B) All matters pertaining to the control of time, frequency, energy flow, kilovar exchange, power factor, voltage and other similar matters bearing on the satisfactory synchronous operations of the Plants, the CG&E Facilities, and the Transmission System.

(C) Such other functions not specifically provided for herein upon which cooperation, coordination, and agreement as to quantity, time, method, terms and conditions are necessary in order that the operation of the Plants, the CG&E Facilities, and the Transmission System may be coordinated to the fullest practicable extent as agreed upon by the Parties.

(D) Resolution of disputes and operating issues.

25.3 Right to Inspect. For the purpose of inspection, checking of records, and all other pertinent matters, said representatives and their alternates shall have the right to request any and all applicable documentation and shall have the right of entry to all property of the Parties used in connection with the performance of this Agreement.

CG&E shall have the right to enter and inspect the ULH&P facilities interconnected to

Unofficial FERC-Generated PDF of 20060301-0381 Received by FERC OSEC 02/23/2006 in Docket#: ER06-548-001

the CG&E Facilities at its discretion under non-Emergency operating conditions. ULH&P shall have the right to enter and inspect the CG&E Facilities at its discretion under non-Emergency operating conditions. Access shall be provided where the Party requesting access provides at least twenty-four (24) hours' advance notice of its desire to inspect and the facilities it desires to inspect.

25.4 Limit of Authority. The Operating Committee shall not have authority to modify any of the terms or conditions of this Agreement.

25.5 Unresolvable Disputes. If the Operating Committee is unable to take action on any matter to be acted upon by it under this Agreement because of a dispute between the representatives as to such matter, then dispute resolution shall proceed in compliance with Article 8 of this Agreement.

ARTICLE 26.

OTHER CONDITIONS

26.1 Filing of Agreement with FERC. CG&E agrees to file this Agreement with the FERC for approval under Section 205 of the Federal Power Act and with any other appropriate regulatory agency as soon as practicable after its execution by the Parties. ULH&P agrees to support such filing, to reasonably cooperate with CG&E with respect to the filing, and to provide any information, including the filing of testimony, reasonably required by CG&E to comply with applicable filing requirements.

26.2 Filing of Amendments. Promptly upon execution of any amendment to this Agreement by the Parties pursuant to Article 16.3 or Article 26.3 of this Agreement, CG&E

Unofficial FERC-Generated PDF of 20060301-0381 Received by FERC OSEC 02/23/2006 in Docket#: ER06-548-001

shall, if necessary, file such amendment with FERC and with any other appropriate regulatory agency. ULH&P agrees to support such filing, to reasonably cooperate with CG&E with respect to such filing, and to provide any information, including the filing of testimony, reasonably required by CG&E to comply with applicable filing requirements.

26.3 Good Faith Negotiations Upon Occurrence of Certain Events. If one of the following events (an "Event") takes place, the Parties agree to negotiate in good faith an amendment or amendments to this Agreement or to take other appropriate action so as to put each Party in as nearly the same position as the Parties would have been had the Event not occurred:

(A) this Agreement is not approved or accepted for filing by FERC without modification or condition; or

(B) FERC, the United States Congress, any state or state regulatory commission, any organization issuing criteria, rules, procedures or standards included in the Rules and Procedures or CG&E (upon approval of the FERC) implements any change in any law, regulation, rule, procedure, standard, criteria or practice which materially affects or is reasonably expected to materially affect either Party's ability to perform under this Agreement; or

(C) compliance with this Agreement causes CG&E or any other entity exercising control over the Transmission System, or ULH&P to be in non-compliance with any requirement of the FERC.

26.3.1 Amendments. Any amendment the Parties negotiate pursuant to this Article 26.3 must be executed by the Parties in writing in accordance with Article 16.3 of this Agreement and, if necessary, filed with the FERC or any other appropriate regulatory agency in accordance

Unofficial FERC-Generated PDF of 20060301-0381 Received by FERC OSEC 02/23/2006 in Docket#: ER06-548-001

with Article 26.2 of this Agreement.

26.3.2 Failure to Agree. If, within sixty (60) days after the occurrence of an Event, the Parties (A) are unable to reach agreement as to what, if any, amendments are necessary, and (B) fail to take other appropriate action so as to put each Party in as nearly the same position as the Parties would have been had the Event not occurred, the Parties may proceed under Article 8 of this Agreement to resolve any disputes related thereto.

26.3.3 Failure to Perform Due to Event. If either CG&E or ULH&P is unable to fully perform its obligations under this Agreement due to the occurrence of an Event, the affected Party will not be deemed to be in default of its obligations under this Agreement to the extent that (A) the Party is unable to perform as a result of the Event and (B) the affected Party acts in accordance with its obligations under this Article 26.3.

IN WITNESS WHEREOF the Parties hereto have caused this Agreement to be executed by their duly authorized officers and their respective corporate seals to be hereunto affixed as of the date first above mentioned.

THE CINCINNATI GAS & ELECTRIC COMPANY

By: _____
John C. Procario
Senior Vice President

THE UNION LIGHT, HEAT AND POWER COMPANY

By: _____
Gregory C. Ficke
President

Unofficial FERC-Generated PDF of 20060301-0381 Received by FERC OSEC 02/23/2006 in Docket#: ER06-548-001

CERTIFICATE OF SERVICE

I hereby certify that I have on this day caused to be served a copy of the foregoing upon all parties on the service list in this proceeding in accordance with the requirements of Rule 2010 of the Commission's Rules of Practice and Procedure.

Denise M. Buffington
Skadden, Arps, Slate, Meagher & Flom LLP
1440 New York Avenue, N.W.
Washington, D.C. 20005
(202) 371-7463
dbuffing@skadden.com

Dated: February 23, 2006

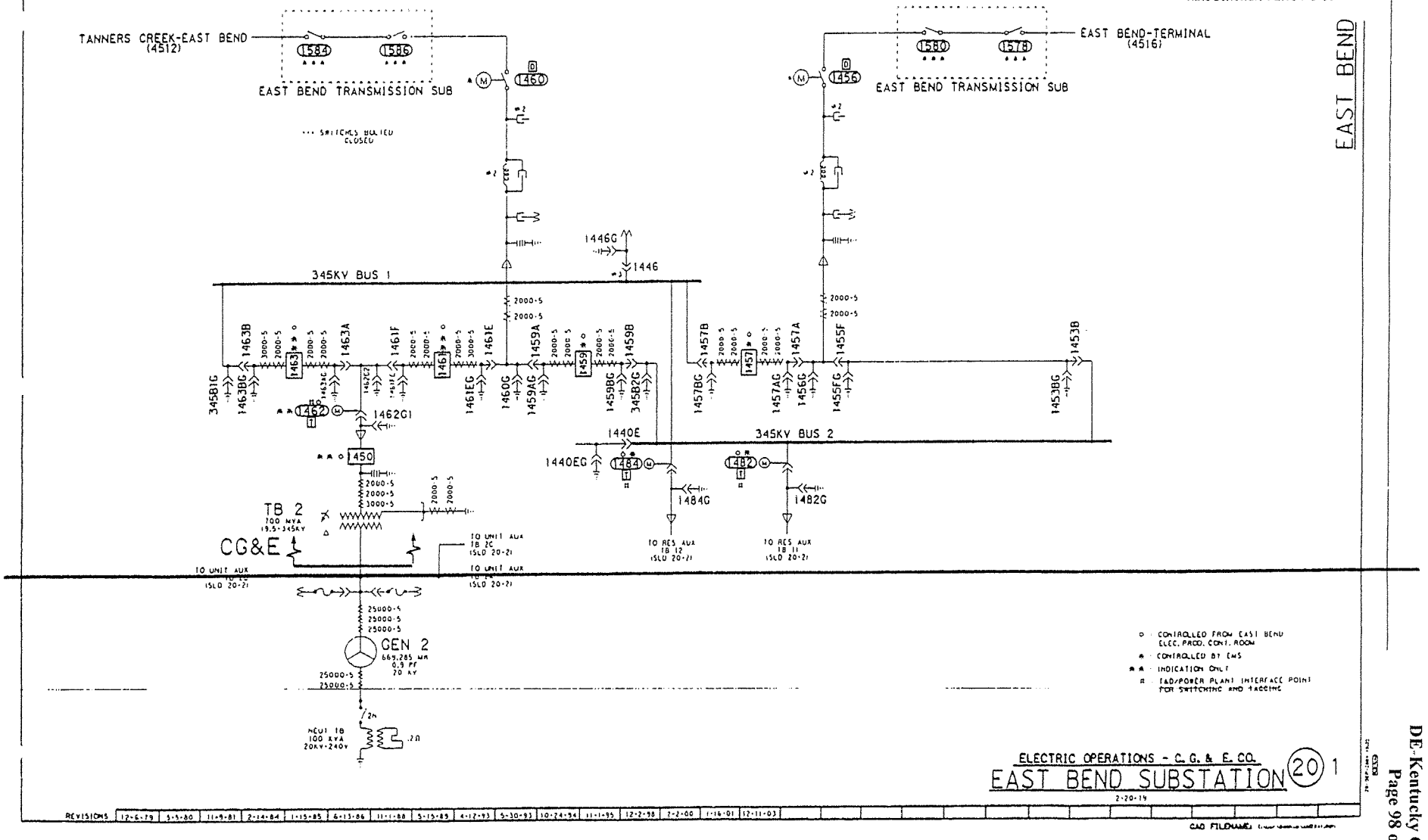
EAST BEND
TANNERS CREEK-EAST BEND (4512)
1584
1586
EAST BEND TRANSMISSION SUB
*** SWITCHES BOLTED CLOSED
1460
EAST BEND-TERMINAL (4516)
1580
1578
EAST BEND TRANSMISSION SUB
1456
1446G
1446
345KV BUS 1
2000-5
2000-5
1463B
1463A
1461F
1461E
1459A
1459B
1457B
1457A
1455F
1453B
345B1G
1463BG
1462
1462G1
1461EG
1460G
1459AG
1459BG
345B2G
1457BG
1457AG
1456G
1455FG
1453BG
1440E
345KV BUS 2
1440EG
1484
1482
1484G
1482G
1450
TB 2
100 MVA
19.5-345KV
CG&E
TO UNIT AUX
TB 2C
(SLD 20-2)
TO UNIT AUX
(SLD 20-2)
TO RES AUX
TB 12
(SLD 20-2)
TO RES AUX
TB 11
(SLD 20-2)
25000-5
GEN 2
669.285 MW
0.9 PF
20 KV
NCU1 1B
100 KVA
20KV-240V
.2Ω
O - CONTROLLED FROM EAST BEND ELEC. PROD. CONT. ROOM
* - CONTROLLED BY EMS
** - INDICATION ONLY
# - TAD/POWER PLANT INTERFACE POINT FOR SWITCHING AND TAGGING
ELECTRIC OPERATIONS - C. G. & E. CO.
EAST BEND SUBSTATION
20
1
2-20-19
REVISIONS
12-6-79
5-5-80
11-9-81
2-14-84
1-15-85
6-13-86
5-15-89
4-12-93
5-30-93
10-24-94
11-1-95
12-2-98
2-2-00
1-16-01
12-11-03
CAD FILENAME

EXHIBIT 2
Page 1 of 1
The Cincinnati Gas & Electric Company
Rate Schedule FERC No. 58

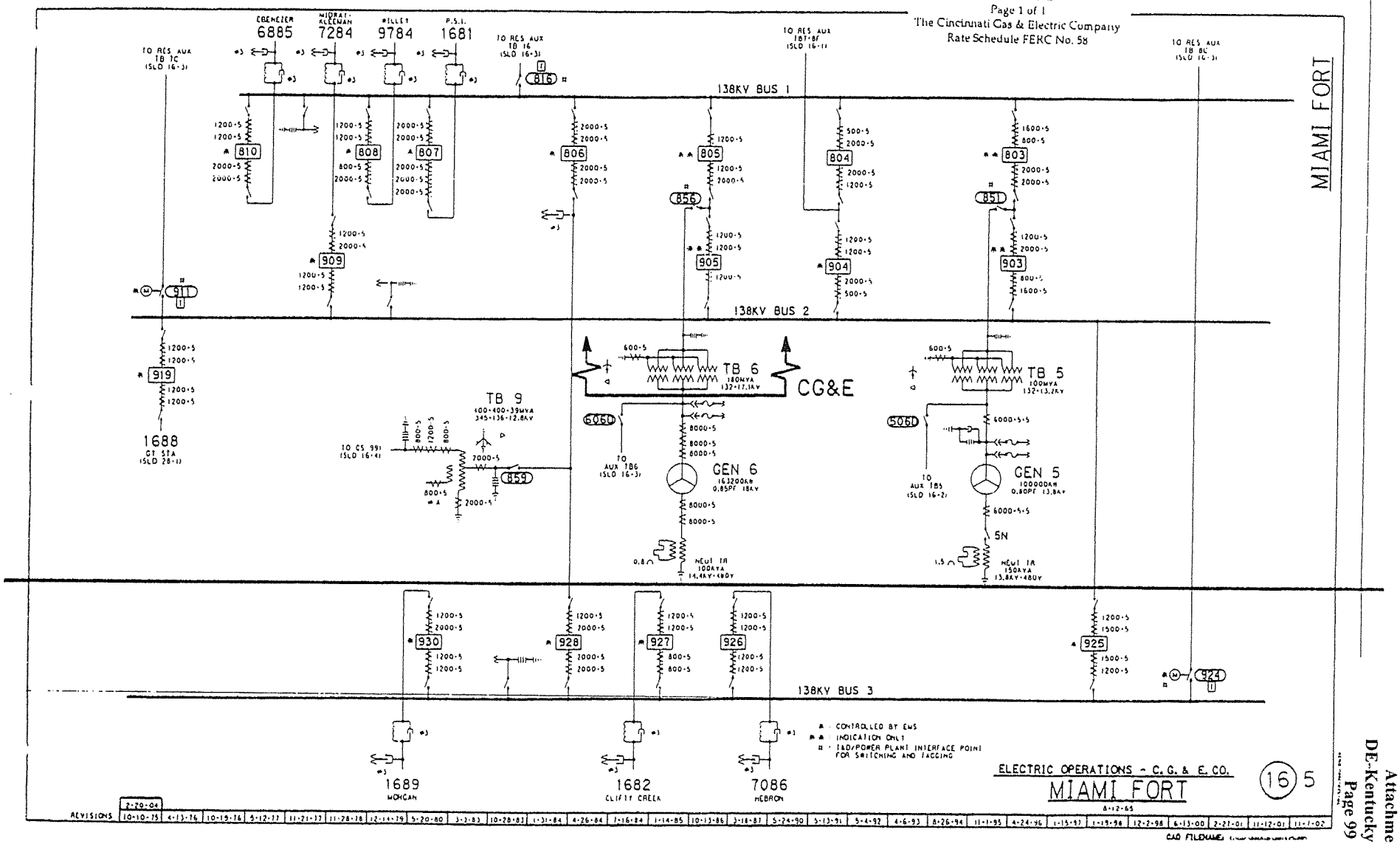

EXHIBIT 3
Page 1 of 3
The Cincinnati Gas & Electric Company
Rate Schedule FERC No. 58

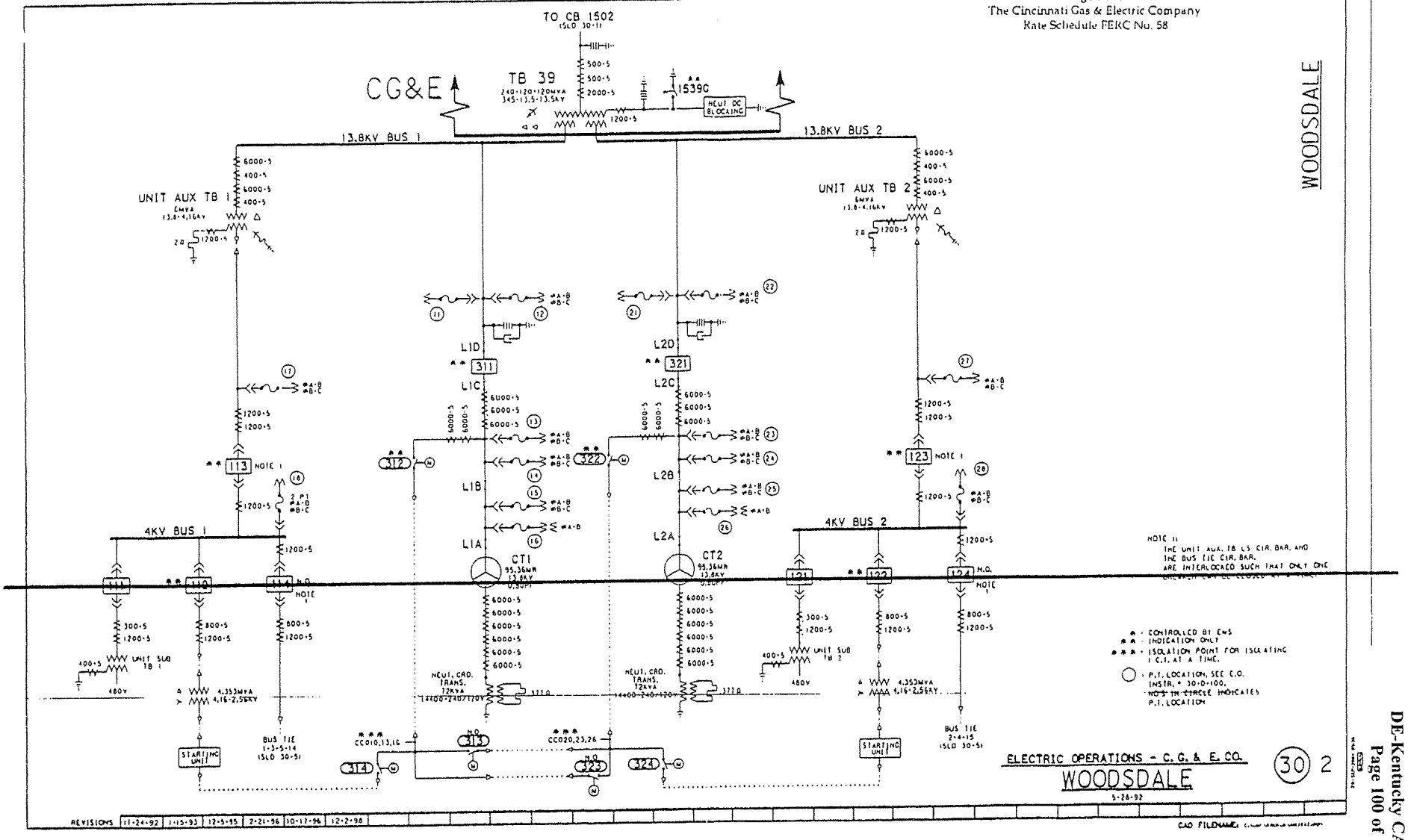

EXHIBIT 3
Page 2 of 3
The Cincinnati Gas & Electric Company
Rate Schedule FERC No. 58

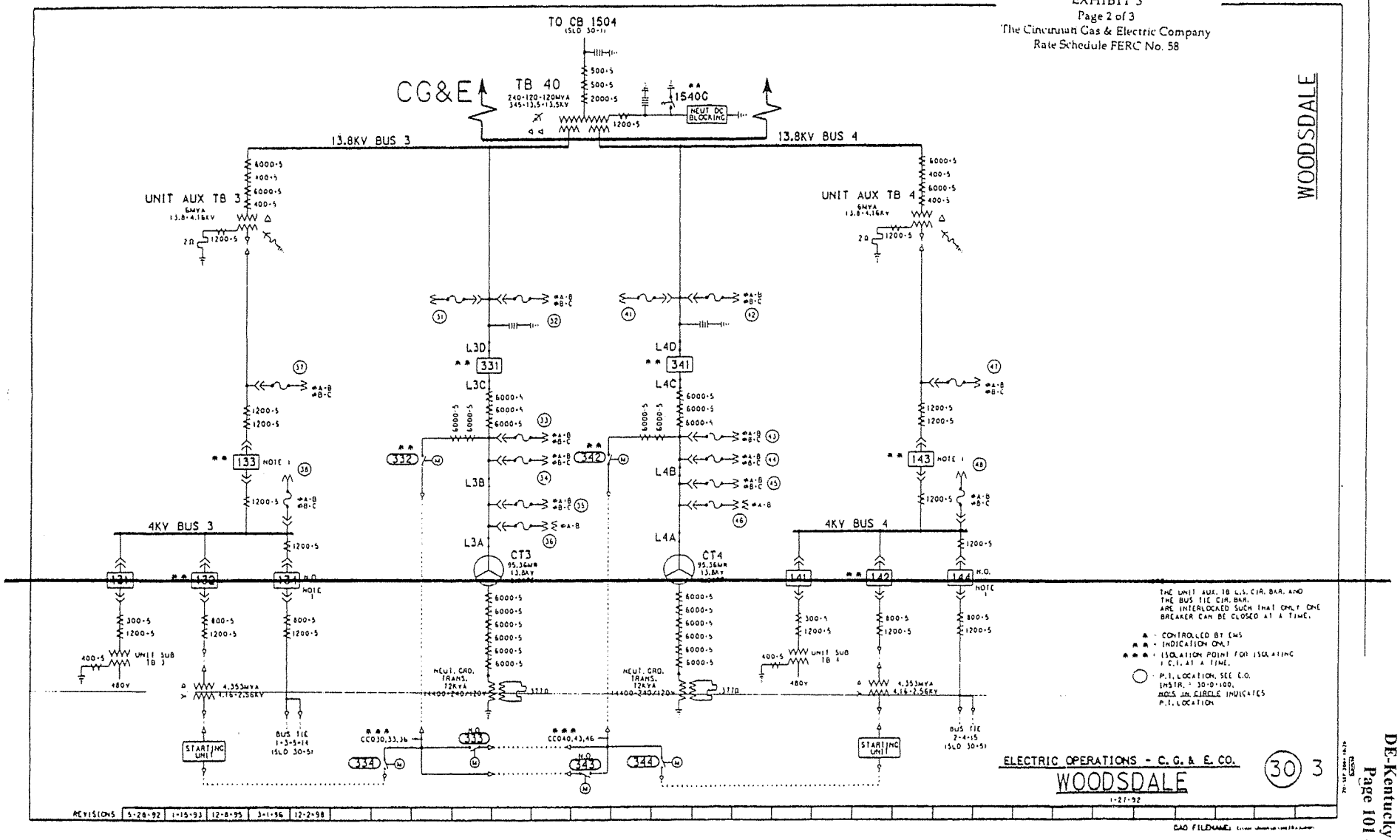

EXHIBIT 3
Page 3 of 3
The Cincinnati Gas & Electric Company
Rate Schedule FERC No. 58

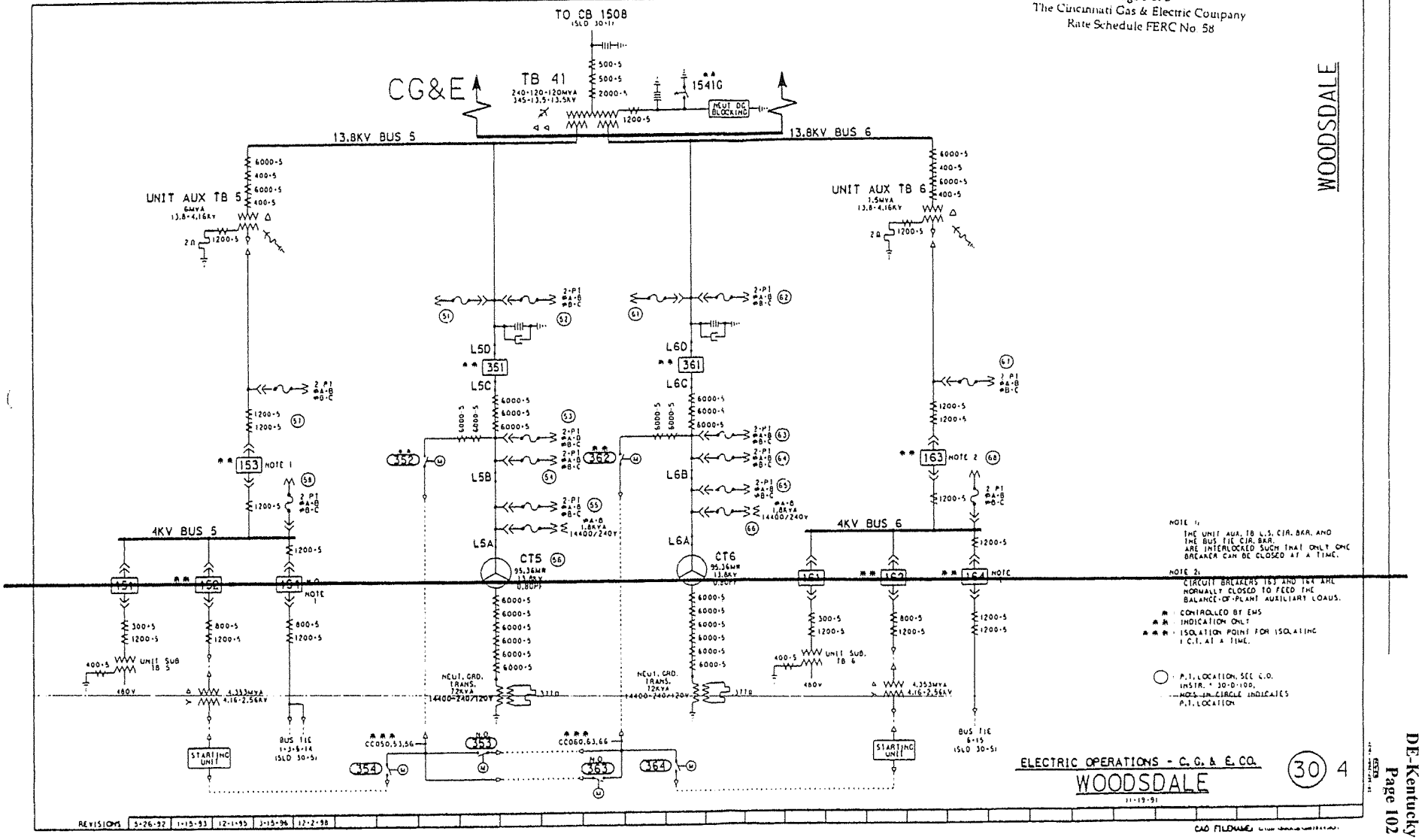

MIAMI FORT UNIT 6 OPERATION AGREEMENT

Between

THE CINCINNATI GAS & ELECTRIC COMPANY

And

THE UNION LIGHT, HEAT AND POWER COMPANY

THIS MIAMI FORT UNIT 6 OPERATION AGREEMENT (the "Agreement"), made as of the 25th day of January, 2006 and effective as of January 1, 2006, between The Cincinnati Gas & Electric Company, an Ohio corporation ("Cincinnati"), and The Union Light, Heat and Power Company, a Kentucky corporation ("ULHP", and together with Cincinnati sometimes referred to hereinafter as the "Parties", and each, individually, sometimes referred to hereinafter as a "Party"), sets forth the agreement of the Parties in respect of the operation of that certain coal-fired steam electric generating unit located at the Miami Fort Station, Hamilton County, Ohio, and having a turbine nameplate rating of 168 MW, and its associated equipment and Common Facilities (as hereinafter defined) and all additions and replacements thereto (collectively, "Miami Fort Unit 6").

A. Basic Obligations

1. Cincinnati shall operate and maintain Miami Fort Unit 6 and any facilities, supplies or equipment used in connection with the operation or maintenance of Miami Fort Unit 6 that also are used in connection with any other electric generating unit located at the Miami Fort Station ("Common Facilities") and shall make additions, replacements and retirements thereto, in accordance with good utility practice. Such practice shall include the maintenance of reasonable coal and fuel oil reserves, the level of which shall be mutually agreed to by the Parties, against interruptions of normal supply.

2. Cincinnati shall use Miami Fort Unit 6 to generate three phase, 60 hertz electric service, with a nominal station bus voltage of 18 kV.

B. Capability and Output

1. The output of Miami Fort Unit 6 shall be fed into transmission lines and related facilities in the manner to be described in a Facilities Operation Agreement to be entered into by and between the Parties.

2. ULHP shall be entitled to the full capability of Miami Fort Unit 6, subject to the following:

a. Cincinnati shall keep ULHP informed as to the maximum practical capability of Miami Fort Unit 6 as it may vary in accordance with the condition and availability of its associated equipment.

b. ULHP shall submit to Cincinnati, with reasonable notice, a schedule of its requirements to be generated pursuant to this Agreement.

c. Subject to necessary or unavoidable outages or reductions in capability, Miami Fort Unit 6 shall be operated so as to produce an output equal to the required scheduled generation of ULHP.

d. Should the capability of Miami Fort Unit 6 for any reason be reduced, ULHP shall immediately take steps to reduce its required scheduled generation.

C. Operation of Miami Fort Unit 6

Cincinnati, as agent for ULHP, shall operate and maintain Miami Fort Unit 6 and perform the other obligations in connection therewith set forth in this Agreement. In carrying out such responsibilities and subject to the maintenance of fuel reserves in accordance with the provisions of Paragraph A. 1. above, Cincinnati shall provide such materials, fuels, equipment and services, from such sources, which may include its own organization, as it determines in its sole discretion to be required.

Cincinnati, as agent for ULHP, shall operate and maintain Miami Fort Unit 6 in accordance with Good Utility Practice. "Good Utility Practice", as used herein, shall mean any of the practices, methods and acts engaged in or approved by a significant portion of the electric utility industry in the United States during the relevant time period, or any of the practices, methods and acts that, in the exercise of reasonable judgment in light of the facts known at the time the decision was made, could have been expected to accomplish the desired result at a reasonable cost consistent with good business practices, reliability, safety and expedition. Good

Utility Practice is not intended to be limited to the optimum practice, method, or act to the exclusion of all others, but rather includes all acceptable practices, methods or acts generally accepted in the region.

Cincinnati shall keep ULHP reasonably informed of present and anticipated operational issues that may reasonably be expected to be material to its obligations to ULHP hereunder. In that connection, it shall endeavor from time to time, as reasonably possible, to obtain advance approval of ULHP of its proposed course of action with respect to Miami Fort Unit 6 and ULHP shall not unreasonably withhold, condition or delay such approval. However, in the event of emergencies or inability to obtain such approval, Cincinnati shall take such action as Cincinnati, in its sole discretion, deems necessary under the circumstances.

D. Reimbursement of Cincinnati by ULHP

ULHP shall make Cincinnati whole for any and all expenses and costs, including applicable overheads, incurred on its behalf by Cincinnati under this Agreement. For the purposes of this Agreement, the following principles shall apply:

1. All expenses, including overheads, directly or indirectly applicable to the operation and maintenance of Miami Fort Unit 6 shall be classified as operation and maintenance expenses and taxes, as appropriate, and shall be the sole responsibility of ULHP. Of these, fuel and fuel handling expenses and associated overheads, exclusive of no-load and start-up fuel and associated fuel handling expenses, shall be classified as energy expenses. Overhead expenses applicable to operation and maintenance shall include expenses related to payroll, such as Social Security taxes, unemployment insurance, group life insurance, group hospitalization and medical insurance, pension plan contributions, thrift or stock purchase plan expenses, expense to Cincinnati of other fringe expenses related to employees and other applied overheads, including administrative and general expenses.

2. Expenses directly assignable to Miami Fort Unit 6 shall be so assigned. Expenses not directly assignable to Miami Fort Unit 6 shall be allocated on the basis of cost responsibility, as mutually agreed upon by the authorized representatives of the Parties.

3. Each Party hereby represents and warrants to the other that the representative identified by it to the other Party as the appropriate representative with respect to the supervision of this Agreement is duly authorized to develop procedures for the implementation and carrying out of the principles of and actions and obligations contemplated by this Agreement.

4. ULHP shall be solely responsible for all costs and expenses related to the maintenance of inventories of fuel and plant material and operating supplies. ULHP shall pay advances to Cincinnati, adjusted as required from time to time, as payment for the estimated requirements for operation and maintenance expenses, related overheads and taxes.

5. All costs and expenses related to additions, replacements and retirements relating to construction accounts and directly assignable to Miami Fort Unit 6 shall be the sole responsibility of ULHP. Funds for such purposes shall be supplied by ULHP to Cincinnati as needed on the basis of estimated costs and shall be adjusted to actual costs after completion of work. Costs and expenses of the nature described in this paragraph 5 not directly assignable to Miami Fort Unit 6 shall be allocated on the basis of cost responsibility, as mutually agreed upon by the authorized representatives of the Parties.

ULHP shall supply the necessary funds notwithstanding the pendency of arbitration or legal proceedings, or both, concerning the extent or propriety of the same, subject to adjustment upon the conclusions of such proceedings.

6. Cincinnati shall continue to apply for, administer and maintain all environmental permits necessary for operation of the Miami Fort Station, including Miami Fort Unit 6 and any Common Facilities. To the extent that Cincinnati's operation of Miami Fort Unit 6 contributes to or results in violation of an environmental permit or any applicable environmental law or regulation, ULHP shall be liable for any and all associated costs, including civil penalties, remedial measures and injunctive relief; *provided, however,* that, notwithstanding the foregoing, in the event that any such violation results from Cincinnati's failure to operate Unit 6 in accordance with Good Utility Practice, Cincinnati shall be solely liable for any and all such associated costs.

7. Cincinnati shall submit statements, in such detail as is reasonably satisfactory to ULHP, for the operation and maintenance expenses, related overheads and taxes.

Refusal on the part of ULHP to make payments as herein provided for, after final determination of the same by arbitration or legal proceedings, or both, if any, as provided for in Section E(6) hereof, shall entitle Cincinnati to deny ULHP any output of Miami Fort Unit 6. This remedy shall be in addition to any other remedies permitted under this Agreement.

E. General

1. The term of this Agreement shall be from the date hereof and shall extend until the twentieth annual anniversary hereof (the "Term"). The Term may be thereafter extended for additional two-year periods upon the mutual written consent of the Parties.

2. Except as to the treatment of liberalized tax depreciation, investment tax credit and other such issues as may arise from time to time in the future, each party in its accounting relating to Miami Fort Unit 6 shall follow the accounting provisions of the Uniform System of Accounts prescribed by the Federal Power Commission for Public Utilities and Licensees, as such provisions may be in effect from time to time, provided that either Cincinnati or ULHP may, in its use of the same, substitute its own, or appropriate Public Utilities Commission of Ohio account numbers for the F.P.C. account numbers.

3. Each Party shall use its best efforts to agree upon and employ from time to time uniform rates for determining the annual provision for depreciation of Miami Fort Unit 6.

4. Cincinnati shall keep accurate books of account containing in detail the items of cost applicable to the operation, maintenance, taxes, depreciation, additions, replacements and retirements for Miami Fort Unit 6. Cincinnati shall permit said books of account to be examined from time to time by ULHP, or on its behalf by its independent public accountant, at the reasonable request of ULHP, to the extent necessary to verify the assignment of costs to ULHP pursuant to the provisions of this Agreement.

5. Neither Cincinnati nor ULHP may assign this Agreement except to an affiliated entity. Subject to the foregoing, this Agreement shall inure to the benefit of and be binding upon the parties and their respective successors and assigns.

6. Any controversy, claim, counterclaim, dispute, difference or misunderstanding arising out of, or relating to this Agreement or the breach thereof, shall be submitted to arbitration upon the request of either of the Parties in the manner hereinafter provided.

The party hereto submitting such request shall serve notice in writing (the "Notice") upon the other party hereto, setting forth in detail the subject or subjects to be arbitrated, and the Parties thereupon shall endeavor to agree upon and appoint one person to act as sole arbitrator. If the parties fail to agree upon such an arbitrator within fifteen days from the receipt of the Notice, any one or more of the parties may apply within five days thereafter to the Chief Judge of the Untied States Court of Appeals for the Sixth Circuit for the appointment of the sole

arbitrator. In the event that the Chief Judge does not within 30 days make such appointment, either party hereto or both Parties may request the American Arbitration Association ("AAA") to appoint the sole arbitrator pursuant to its rules then obtaining.

The arbitration shall be conducted in accordance with the rules of the AAA then in effect. The findings and award of the sole arbitrator shall be binding and conclusive with respect to the matter or matters submitted to arbitration, except as such findings and award may be modified, corrected or vacated as provided in Sections 2711.10 and 2711.11 of the Revised Code of Ohio, or the successors to such Sections, in effect at the time under consideration. The costs of arbitration shall be divided equally between the Parties.

Performance of this provision shall be a condition precedent to the institution of any proceeding in any court concerning any controversy, claim, counterclaim, dispute, difference or misunderstanding, arising out of, or relating to this Agreement or the breach thereof.

7. Cincinnati and ULHP hereby acknowledge that future operating conditions may materially change from those now contemplated. In that event, they will use their best efforts to agree upon modifications to this Agreement that are fair and reasonable.

8. The performance of each provision of this Agreement is conditioned upon the due receipt of all regulatory approvals, in the form and substance satisfactory to the Parties, necessary to permit the performance thereof, and each party hereto shall use its best effort, to obtain any such necessary regulatory approval.

IN WITNESS WHEREOF, the Parties have caused this Agreement to be duly executed as of the 25th day of January, 2006.

THE CINCINNATI GAS & ELECTRIC COMPANY

By _____
Executive Vice President
Michael J. Cyrus

THE UNION LIGHT, HEAT AND POWER COMPANY

By _____
Chairman and Chief Executive Officer
Gregory C. Ficke

GAS AND PROPANE SERVICES AGREEMENT WITH RESPECT TO WOODSDALE GENERATING STATION BY AND BETWEEN THE CINCINNATI GAS & ELECTRIC COMPANY AND THE UNION LIGHT, HEAT AND POWER COMPANY

THIS GAS AND PROPANE SERVICES AGREEMENT ("Agreement"), is made and entered into this 25th day of January, 2006 and effective as of January 1, 2006, ("Effective Date") by and between The Cincinnati & Electric Company ("CG&E") and The Union Light, Heat and Power Company ("ULH&P") (each of CG&E and ULH&P being a "Party" and collectively, the "Parties").

RECITALS:

WHEREAS, immediately prior to the Effective Date, CG&E was the sole owner of all right, title and interest in, under and to Woodsdale Generating Station, a dual-fuel (natural gas and propane), single cycle electric generating station located in Butler County, Ohio in the city of Trenton ("Woodsdale Station");

WHEREAS, in accordance with the provisions of that certain Asset Transfer Agreement by and between CG&E and ULH&P, dated as of the date hereof (the "Asset Transfer Agreement"), on the Effective Date, CG&E transferred, assigned, conveyed and delivered to ULH&P all of CG&E's right, title and interest in, under and to Woodsdale Station and all real and personal property, tangible and intangible, constituting, or used in connection with or ancillary to the ownership and operation of, Woodsdale Station (other than certain assets associated therewith but excluded therefrom, including generation step-up transformers and other assets subject to the jurisdiction of the Federal Energy Regulatory Commission);

WHEREAS, ULH&P desires that CG&E provide certain operation and maintenance services to ULH&P related to the natural gas facilities and the propane facilities related to Woodsdale Station and CG&E desires to provide such services.

NOW THEREFORE, in consideration of the mutual agreements herein and for other good and valuable consideration, the receipt and sufficiency of which are hereby acknowledged, the Parties hereto agree as follows:

ARTICLE I

SERVICES

A) Engagement. Subject to the terms, conditions, provisions and limitations of this Agreement, ULH&P hereby engages CG&E, and CG&E agrees to accept such engagement, to provide the Natural Gas O&M Services and Propane O&M Services, both as defined below (and together referred to as the "Services").

B) Natural Gas O&M Services.

1. CG&E will provide the Natural Gas O&M Services with respect to certain of ULH&P's natural gas facilities serving Woodsdale Station that are described on Schedule 1(B),

attached hereto and made a part hereof (the "Natural Gas Facilities"), from the interconnect at Liberty Station through the outlet side of Station # 563 at Woodsdale.

2. The operation and maintenance of natural gas facilities owned by ULH&P contemplated by this Agreement (the "Natural Gas O&M Services") to be performed by CG&E hereunder shall include the following:

   a. Perform leak survey and line patrol of Line C210
   b. Perform corrosion survey of Line C210
   c. Conduct regular inspections
   d. Read interference bonds
   e. Maintain grounds upkeep at Liberty Station
   f. Calibrate and maintain meter and transducer
   g. Perform RTU calibration
   h. Check odorant equipment
   i. Perform DOT Integrity Management
   j. Perform any other regulatory compliance requirements
   k. Supply odorant to odorizers
   l. Monitor pressures, flows and odorization rates
   m. Handle miscellaneous trouble calls.

C) Natural Gas Service. ULH&P will be responsible for arranging for natural gas supplies for use at Woodsdale Station through the marketer or supplier of its choice and shall arrange for the transportation and delivery of those natural gas supplies on the Texas Gas Transmission system into Liberty Station.

D) Propane O&M Services.

1. CG&E will provide the Propane O&M Services with respect to certain of ULH&P's propane facilities serving Woodsdale Station that are described on Schedule 1(D), attached hereto and a part hereof (the "Propane Facilities"), from tap on the LP-6 line owned by CG&E and Ohio River Valley Propane ("ORVP") through the LP-7 line to the inlet flange of the first stage regulator to Woodsdale Station.

2. CG&E and ULH&P, along with ORVP, shall share the use of Line LP-6.

3. The operation and maintenance of propane facilities owned by ULH&P contemplated by this Agreement (the "Propane O&M Services") to be performed by CG&E hereunder shall include the following:

   a. Operate Todhunter control for Liquid Propane delivery to Woodsdale Station
   b. Odorize liquid propane to Woodsdale Station
   c. Maintain current odorizer system i.e. pump, controls, RTU
   d. Maintain current odorizer and micro-motion at Woodsdale
   e. Order odorant
   f. Monitor system
   g. Leak survey and line patrol of Line LP-7
   h. Perform corrosion survey of Line LP-7
   i. Conduct regulator inspections
   j. Read interference bonds

k. Check water separator at Todhunter
l. Operate cavern pumps when supplying propane to Woodsdale Station from CG&E's Todhunter Cavern
m. Handle miscellaneous trouble calls

ARTICLE II

TERM

A) The term of this Agreement shall commence on the Effective Date and shall continue in effect until the second anniversary of the Effective Date (the "Original Term"), unless sooner terminated in accordance with the terms of this Agreement.

B) Automatic Renewal Terms. This Agreement shall automatically renew for additional two year terms ("Automatic Renewal Term") unless terminated by either Party upon two (2) months' notice prior to the end of the Original Term or an applicable Automatic Renewal Term.

ARTICLE III

TITLE; ACCESS

A) Station. ULH&P shall retain all right, title, ownership of and exclusive rights to Woodsdale Station.

B) Fuel. ULH&P shall retain title to, shall have care, custody, control and ownership of all natural gas and propane with respect to which CG&E is providing the services contemplated hereunder.

C) Access to Woodsdale Station. ULH&P hereby grants CG&E a non-exclusive license during the term of this Agreement to access any Natural Gas Facilities and/or Propane Facilities in order to perform the Services in accordance with the terms set forth herein.

ARTICLE IV

FEES; PAYMENT

A) Fees. As full compensation and consideration for the performance of all of the Services under this Agreement, ULH&P shall pay to CG&E each month CG&E's fully-allocated cost for performing the Services for the immediately preceding month.

ARTICLE V

TERMINATION OF AGREEMENT

A) Conditions for Termination. This Agreement shall terminate and neither Party shall have any remaining rights or obligations hereunder, with the exception of payment by ULH&P to CG&E of any amounts due for services performed as of the date of termination, upon the occurrence of any of the following:

(1) the natural expiration of the Original Term or Automatic Renewal Terms and either Party's election not to renew pursuant to Article II;

(2) the occurrence of any event beyond the reasonable control of the affected Party which results in the failure or delay by the affected Party of some performance under this Agreement, in full or part, including the following: (i) failure of the Natural Gas Facilities or Propane Facilities not caused by failure to maintain, (ii) failure of Woodsdale Station due to drought, flood, earthquake, storm, fire, lightning, epidemic, war, terrorism, riot, civil disturbance, sabotage or other act of God, (iii) strike or labor difficulty, (iv) accident or curtailment of natural gas or propane supply, (v) total casualty to equipment and (vi) restraint, order or decree by a governmental authority;

(3) damage or destruction to Woodsdale Station that is reasonably determined by ULH&P's insurance provider to constitute a total loss to the station;

(4) the sale of Woodsdale Station by ULH&P to a third party; or

(5) failure by ULH&P, in the case of termination by CG&E, or failure by CG&E, in the case of termination by ULH&P, to comply with any material covenant, obligation or agreement made by it and contained in this Agreement.

ARTICLE VI

MISCELLANEOUS

A) No Third Party Beneficiary; No Dedication. This Agreement is intended to be solely for the benefit of CG&E and ULH&P and their successors and permitted assigns, and nothing in this Agreement, express or implied, is intended to, and this Agreement shall not, confer any rights, remedies, or benefits on any person not a signatory hereto.

B) Entire Agreement. This Agreement and any Exhibit or Schedule attached hereto integrate the entire agreement of the Parties with respect to the subject matter hereof, and supersede all oral negotiations and prior writings in respect to the subject matter hereof.

C) Amendments. This Agreement may be amended or modified only by an instrument in writing signed by an authorized officer of each of the Parties making specific reference to the provision or provisions to be amended or modified.

D) Headings. The table of contents and headings of the various Articles and Sections of this Agreement are for convenience of reference only and shall not modify, define, or limit any of the terms or provisions hereof.

E) Counterparts. This Agreement may be executed and delivered in multiple originals or using counterpart signature pages and may be delivered by facsimile transmission. All such multiple originals shall constitute but one and the same document.

[The remainder of this page is intentionally left blank. Signature pages to follow.]

IN WITNESS WHEREOF, the Parties have by their respective duly authorized officers caused this Agreement to be executed and delivered by their duly authorized officers as of the day and year first above written.

The Cincinnati Gas & Electric Company

By: _____
Name: Michael J. Cyrus
Title: Executive Vice President

The Union Light, Heat and Power Company

By: _____
Name: Gregory C. Ficke
Title: President

Schedule 1 (B)

Station #562 – Liberty Station

Station #563 – Woodsdale Station

Feeder Line C210

SCADA Equipment

Meter Runs at Woodsdale Station

Schedule 1 (D)

At TEPPCO's Todhunter Cavern's #2, 5, & 6:
1 submersible pump at Cavern #5
1 submersible pump at Cavern #6

At CG&E's Todhunter Cavern #1:
2 submersible cavern pumps
Motor control center
2 water separators
6 surface pumps
Metering, regulating equipment
SCADA equipment

Feeder Line LP-7 connecting Todhunter Cavern #1 to Woodsdale Station.

Metering, regulating, and storage facilities at Woodsdale Station.

AGREEMENT FOR GYPSUM DISPOSAL SERVICES

This AGREEMENT FOR GYPSUM DISPOSAL SERVICES ("Agreement") is made and entered into as of the 28th day of August, 2007, by and between The Dayton Power and Light Company ("Dayton"), and Duke Energy Kentucky, Inc. ("DEK"). Dayton and DEK shall be referred to individually as a "Party" and collectively as "Parties."

WHEREAS, Dayton desires to retain DEK to perform scrubber gypsum ("Product") disposal services for Dayton for Product produced by Dayton's Killen Generating Station ("Killen");

WHEREAS, Dayton and DEK desire to have their rights, obligations and duties set forth herein.

NOW THEREFORE, in consideration of the premises and of the mutual agreements and understandings contained herein, the Parties agree as follows:

1. Agreement to Furnish Product Disposal Services. Dayton hereby retains DEK to provide disposal services for Product produced by Killen as may be required from time to time in conjunction with Dayton's needs and duties as operator of Killen. DEK hereby agrees to furnish to Dayton, upon the terms and conditions herein provided, Product disposal services (the "Services").

2. Term. The term of this Agreement shall be for a period of one (1) year commencing on the date set forth above ("Calendar Year"), subject to earlier termination as provided herein. This Agreement shall automatically renew for successive periods of one (1) year each unless either Party terminates this Agreement by giving to the other thirty (30) days written notice of termination any time after the expiration of the initial term.

3. Services to be Performed by DEK. During the term of this Agreement, DEK will provide the following services to Dayton:

a. DEK will accept from Dayton a maximum of fifty thousand (50,000) tons of Product for disposal at DEK's East Bend landfill disposal site during each Calendar Year of the Agreement. The Product will be placed in individual cells at the East Bend landfill disposal site designated as cells P-15 and P-16 ("Delivery Site"). The Product shall meet criteria established by the Kentucky Department of Environmental Protection Special Waste Regulations.

b. DEK will be responsible for obtaining all associated permits for this disposal, and Dayton shall reimburse DEK for the associated permit fees.

c. Nothing contained in this Agreement shall be construed to require Dayton to dispose of any Product at any time. The election to use this Service or not shall be totally within Dayton's discretion.

4. Delivery. Dayton shall be responsible for loading, transporting and unloading the Product in trucks from Killen to East Bend. The Product shall be unloaded directly to the Delivery Site. The trucks shall be tarped or appropriately covered. Dayton shall comply with all United States Department of Transportation (DOT) and other applicable regulations. All shipments of Product shall not exceed the applicable federal, state or local gross vehicle and/or railcar weight limits. Dayton shall maintain in force and require carriers it engages to carry vehicular liability insurance equivalent to that specified in the Section 19 hereto and shall, upon request, provide DEK with certificates of insurance evidencing such coverages. Vehicles arranged for the transportation of Product shall be devoid of any residue from previous shipments.

5. Title. Title to the Product and risk of loss with respect thereto shall pass from Dayton to DEK when the Product is unloaded at the Delivery Site; provided that the passage of title and risk of loss shall reinvest in Dayton upon DEK's rejection of the Product.

6. Weighing. For purposes of calculating the amount of Product delivered, Dayton shall be responsible for obtaining the weight of each Product shipment through certified truck scales (with weigh tickets printed automatically) and providing DEK with a copy of each weigh ticket.

7. Right to Reject. DEK shall have the right to reject any shipment of Product that contains foreign materials or any other materials or substances, in its sole discretion. In the event DEK rejects a shipment from Dayton, then Dayton shall be responsible for removing the shipment and paying all costs associated with the disposal.

8. Scheduling. Dayton shall provide DEK with at least two (2) business days notice prior to delivering Product to East Bend specifying among other things, the amount of Product to be delivered and the time of delivery. All deliveries shall occur Monday through Friday (excluding holidays), between the hours of 8:00 a.m and 3:30 p.m.

9. Price. Dayton agrees to pay to DEK Twenty One Dollars and ninety-five cents ($21.95) per ton for DEK's disposal Services. On an annual basis starting on April 1 of each year of the term, Dayton and DEK agree to review the costs for Services rendered and adjust same based upon the relative change in local landfill disposal fees. In order to calculate the appropriate disposal fee change, each year the Parties shall

determine the increase in disposal fees per ton for the two nearest public landfills to East Bend for residential refuse. The price for Services in this Agreement for the applicable contract year shall be adjusted to equal the price at the nearest landfill that has the lowest price per ton.

10. Payment Terms. DEK shall invoice Dayton monthly for tonnage based on the weight tickets. Dayton shall pay DEK within thirty (30) days of receiving an invoice by wire transfer or in otherwise available funds. Dayton shall remit payment pursuant to the terms and location set forth in the invoice. All invoices shall be sent to:

Killen Electric Generating Station
14869 U.S. Route 52
Manchester, OH 45144

11. Representations. Dayton represents and warrants to DEK as follows:

a. As of the time of delivery to DEK, Dayton shall have (and shall deliver to DEK) good and marketable title to all of the Product delivered to DEK, free and clear of all liens, charges, interests, claims and encumbrances of any kind whatsoever.

b. The execution, delivery and performance of this Agreement have been duly authorized by all requisite corporate action; and neither the execution nor delivery of this Agreement nor the consummation of the transactions contemplated by this Agreement shall result in any breach of, default in, or conflict with any judgment, order, decree, or any agreement, contract, document or instrument to which Dayton is a party or to which Dayton or any of its properties or assets are otherwise bound.

12. Compliance with Laws. Dayton and DEK shall be familiar with, and perform this Agreement in full compliance with, all applicable local, state, or federal laws, regulations, rules, guidelines, orders or judgments in any way relating to or affecting Dayton or DEK, their businesses, or the production, acquisition, sale, handling, transportation, use, recycling or other disposition of the Materials or otherwise relating to the transactions contemplated under this Agreement, whether currently existing or hereafter enacted, including, without limitation, those relating to employees, health and the environment (collectively, "Applicable Laws"), and all regulatory, permitting, licensing, filing and other requirements (collectively, "Governmental Requirements") necessary under any Applicable Laws, relating to Dayton or DEK and/or the performance of this Agreement.

13. Confidentiality. Each Party hereto agrees to treat as strictly confidential and not to use or disclose to any third party, any confidential information concerning the

other party's business, operations, technologies, formulas, procedures, processes, methods, trade secrets, ideas, improvements, plans, programs, plants, equipment or customers, except as shall be necessary to perform this Agreement. Confidential information under this Section shall not include information (a) which was already known by the receiving party ("Recipient") prior to its disclosure by the other party hereto hereunder; (b) which now is or in the future becomes generally known within the industry through no wrongful act by Recipient; (c) which becomes known by Recipient on a non-confidential basis from some other source not under any obligation of confidentiality; or (d) which is required to be disclosed by law, a Court, tribunal, or governmental authority.

14. Indemnity. BOTH DAYTON AND DEK AGREE TO INDEMNIFY, DEFEND AND HOLD THE OTHER PARTY HARMLESS FROM ANY AND ALL LOSSES, LIABILITIES, DAMAGES, CLAIMS (INCLUDING, WITHOUT LIMITATION, CLAIMS FOR PERSONAL INJURY, BODILY INJURY, ILLNESS, DEATH OR PROPERTY DAMAGE), COSTS, EXPENSES (INCLUDING, WITHOUT LIMITATION, REASONABLE ATTORNEYS' FEES), PENALTIES, FINES AND JUDGMENTS OF ANY NATURE WHATSOEVER (COLLECTIVELY "LOSSES"), CAUSED BY OR ARISING OUT OF ANY NEGLIGENT ACTION, OMISSION, WILLFUL MISCONDUCT, STRICT LIABILITY, NEGLIGENTLY OR WILLFULLY CAUSED ENVIRONMENTAL LIABILITY OR OTHER RESPONSIBILITY OR FAULT OF THE INDEMNIFYING PARTY, OR ANY OTHER BREACH OF THIS AGREEMENT BY THE INDEMNIFYING PARTY. NOTWITHSTANDING ANYTHING IN THIS AGREEMENT, NEITHER PARTY'S LIABILITY OR OBLIGATIONS THAT ARISE AS A RESULT OF BEING A CO-OWNER OF THE EAST BEND FACILITY SHALL NOT BE EXCUSED OR LIMITED IN ANY WAY BECAUSE OF THIS AGREEMENT.

15. Liability; Rights and Remedies. Expiration, termination, or cancellation of this Agreement shall not affect rights, obligations, or liabilities accruing prior to such expiration, termination, or cancellation. The rights and remedies of DEK and Dayton hereunder are cumulative of and in addition to one another and are cumulative of and in addition to any other rights or remedies that DEK and Dayton may have under applicable law.

16. Limitation on Liability. NOTWITHSTANDING ANYTHING IN THIS AGREEMENT TO THE CONTRARY, NEITHER PARTY SHALL BE LIABLE TO THE OTHER FOR ANY INDIRECT, INCIDENTAL, SPECIAL, PUNITIVE, EXEMPLARY OR CONSEQUENTIAL DAMAGES.

17. Termination. Either Party may terminate this Agreement for cause after giving the other Party notice of the default if such default is not cured within ten (10) days following receipt of such notice. DEK shall have the right to terminate this Agreement for convenience immediately with notice in the event of the following: (i) a

Change in Law that prohibits or, in DEK's good faith, reasonable judgment, makes economically unfeasible for DEK to dispose of Dayton's Product at East Bend; or (ii) a binding order or directive by any governmental authority having jurisdiction mandating the permanent shutdown of East Bend. This Agreement shall be subject to immediate termination by either party if performance would conflict with any applicable statute or any applicable rule, regulation or order, unless the parties shall amend this Agreement to alleviate such conflict and/or achieve regulatory compliance.

18. Notices. All notices hereunder shall be in writing and shall be deemed to have been given at the time when mailed in any general or branch United States Post Office enclosed in a certified or registered prepaid envelope addressed to the address of the respective parties as follows:

Dayton:	President, Power Production The Dayton Power and Light Company 1065 Woodman Drive Dayton, OH 45432
DEK:	Station Manager Duke Energy Corporation East Bend Station P. O. Box 937 Union, KY 41091

19. Insurance. During the term of this Agreement and so long as there remain any continuing obligations or duties (including, without limitation, any indemnification obligations), DEK and Dayton and/or their agents shall obtain and maintain at its expense self-insurance or insurance policies with insurance carriers rated A.M. Best A-VI or better and providing for minimum coverage limits as follows:

Commercial General Liability including, without limitation, bodily injury, fire legal liability (of at least $100,000), products, completed operations	$1,000,000 per occurrence/$2,000,000 in the general aggregate/products-completed operations aggregate limit
Umbrella Liability Insurance	$2,000,000 per occurrence and in the aggregate

It is understood and agreed that coverages required represent minimum requirements and are not to be construed to void or limit DEK's or Dayton's indemnity or other liabilities under this Agreement or otherwise, nor to impose any manner of limitation of insurance coverages that DEK or Dayton (and/or their agents) may voluntarily elect to maintain for its own protection. All insurance required herein shall be primary coverage to any coverage which may be carried by Dayton or DEK respectively. To the extent Dayton is responsible for the transportation of the Product, Dayton and/or its agents shall maintain insurance in the minimum limits set forth above and shall comply with all similar insurance obligations set forth above.

20. Waiver. Failure by either party to insist upon strict compliance with any of the terms, covenants or conditions hereof shall not be deemed a waiver of such term, covenant or condition, nor shall any waiver or relinquishment of any right or power hereunder at any one or more times be deemed a waiver of relinquishment of such right or power at any other time or times.

21. Severability. The provisions of this Agreement are divisible. If any such provision shall be deemed invalid or unenforceable, such provision shall be deemed limited to the extent necessary to render it valid and enforceable.

22. Assignability. This Agreement shall only be assigned upon written consent of the non-assigning party, not to be unreasonably withheld. The terms, covenants and conditions of this Agreement shall be binding upon and inure to the benefit of Dayton and DEK, their respective successors and permitted assigns.

23. Complete Agreement. This Agreement is intended as a complete and exclusive statement of the terms of the agreement between the Parties and may not be changed or terminated orally but only by an agreement in writing signed by all of the parties hereto.

24. Governing Law. This Agreement shall be governed by and construed and enforced in accordance with the laws of the State of Ohio.

IN WITNESS WHEREOF, the parties have executed this Agreement as of the date hereinabove set forth.

DUKE ENERGY KENTUCKY, INC.

By: _____

Title: EAST BEND STATION MANAGER

THE DAYTON POWER AND LIGHT COMPANY

By: _____
Gary G. Stephenson

Title: Senior V.P., Generation & Marketing

Name of Respondent	This Report Is:	Date of Report (Mo, Da, Yr)	Year/Period of Report
Duke Energy Kentucky, Inc.	(1) [X] An Original (2) [ ] A Resubmission	/ /	End of 2008/Q4

Transactions with Associated (Affiliated) Companies

1. Report below the information called for concerning all goods or services received from or provided to associated (affiliated) companies amounting to more than $250,000.
2. Sum under a description "Other", all of the aforementioned goods and services amounting to $250,000 or less.
3. Total under a description "Total", the total of all of the aforementioned goods and services.
4. Where amounts billed to or received from the associated (affiliated) company are based on an allocation process, explain in a footnote the basis of the allocation.

Line No.	Description of the Good or Service (a)	Name of Associated/Affiliated Company (b)	Account(s) Charged or Credited (c)	Amount Charged or Credited (d)
1	Goods or Services Provided by Affiliated Company			
2	Duke Energy Ohio employees provide services for Miami Fort Unit 6 generating station and Woodsdale station	Duke Energy Ohio, Inc	various	8,523,479
3	Duke Energy Ohio employees provide O&M and capital services for the electric transmission and distribution systems	Duke Energy Ohio, Inc	various	9,323,370
4	Duke Energy Ohio employees provide O&M and capital services for the gas distribution system	Duke Energy Ohio, Inc	various	8,426,852
5				
6				
7				
8	Other Goods or Services Provided by Duke Energy Carolinas	Duke Energy Carolinas, LLC	various	86,935
9	Services provided by Duke Energy Shared Services and Duke Energy Business Services (Service Company transactions)	Duke Energy Shared Services, Inc and Duke Energy Business Services, LLC	various	50,568,610
10	Other Goods or Services Provided by Duke Energy Ohio	Duke Energy Ohio, Inc	various	836,248
11	Duke Energy Ohio employees provide services for customer service operations	Duke Energy Ohio, Inc	various	378,375
12	Duke Energy Indiana employees provide O&M and capital services for the gas distribuiton system	Duke Energy Indiana, Inc	various	154,405
13	Other Goods or Services Provided by Duke Energy Indiana	Duke Energy Indiana, Inc	various	636,879
14	Duke Energy Indiana fossil/hydro adjustment	Duke Energy Indiana, Inc	various	(1,044,789)
15				
16	Total			77,890,364
17				
18				
19				
20	Goods or Services Provided for Affiliated Company			
21				
22	DE Kentucky employees provide services to Duke Energy One for equipment installation, T&D construction and maintenance	Duke Energy One	various	27,755
23	DE Kentucky provide services to DE Indiana for admin, training, and support services at various combustion turbine sites	Duke Energy Indiana, Inc	various	915,983
24	DE Kentucky employees provide services to DE Shared Services and DE Business Services (Service Company)	Duke Energy Shared Services, Inc and Duke Energy Business Services, LLC	various	103,581
25	DE Kentucky employees provide O&M and capital services to DE Indiana for the electric T&D systems	Duke Energy Indiana, Inc	various	1,240,156
26	DE Kentucky employees provide O&M and capital services to DE Ohio for the electric T&D systems	Duke Energy Ohio, Inc	various	4,171,365
27	DE Kentucky employees provide O&M and capital services to DE Ohio for the gas distribution systems	Duke Energy Ohio, Inc	various	23,134,941
28	Other goods or services provided by DE Kentucky to DE Ohio	Duke Energy Ohio, Inc	various	(9,761)
29	Other goods or services provided by DE Kentucky to DE Carolinas	Duke Energy Carolinas, LLC	various	(5,879)
30	Other goods or services provided by DE Kentucky to KO Transmission	KO Transmission	various	8,372
31	Other goods or services provided by DE Kentucky to DE Indiana	Duke Energy Indiana, Inc	various	6,688
32				
33	Total			29,593,201
34				
35				
36				

Name of Respondent	This Report Is:	Date of Report (Mo, Da, Yr)	Year/Period of Report
Duke Energy Kentucky, Inc.	(1) [X] An Original (2) [ ] A Resubmission	/ /	End of 2008/Q4

Transactions with Associated (Affiliated) Companies (continued)

Line No.	Description of the Good or Service (a)	Name of Associated/Affiliated Company (b)	Account(s) Charged or Credited (c)	Amount Charged or Credited (d)
37				
38				
39				
40				

Name of Respondent	This Report is:	Date of Report (Mo, Da, Yr)	Year/Period of Report
Duke Energy Kentucky, Inc.	(1) X An Original (2) _ A Resubmission	/ /	2008/Q4

FOOTNOTE DATA

Schedule Page: 358 Line No.: 9 Column: a

When an employee of the Service Company performs services for a Client Company, costs will be directly assigned or distributed or allocated. For allocated services, the allocation method will be on a basis reasonably related to the service perfomed. The Service Company Utility Service Agreement prescribes 23 Service Company functions and approximately 20 allocation methods.

Functions and Allocation Methods:

Information Systems
- Number of Central Processing Unit Seconds Ratio
- Number of Personal Computer Workstations Ratio
- Number of Information Systems Servers Ratio
- Number of Employees Ratio
- Three Factor Formula

Meters
- Number of Customers Ratio

Transportation
- Number of Employees Ratio
- Three Factor Formula

Electric System Maintenance
- Circuit Miles of Electric Transmission Lines Ratio
- Circuit Miles of Electric Distribution Lines Ratio

Marketing and Customer Relations
- Sales Ratio
- Number of Customers Ratio

Electric Transmission & Distribution Engineering & Construction
- Electric Transmission Plant Construction - Expenditures Ratio
- Electric Distribution Plant Construction - Expenditures Ratio

Power Engineering & Construction
- Electric Production Plant Construction - Expenditures Ratio

Human Resources
- Number of Employees Ratio

Materials Management
- Procurement Spending Ratio
- Inventory Ratio

Facilities
- Square Footage Ratio

Accounting
- Three Factor Formula

Power Planning Operations
- Electric Peak Load Ratio
- Weighted Avg of the Circuit Miles of Electric Distribution Lines Ratio and the Electric Peak Load Ratio
- Sales Ratio
- Weighted Avg of the Circuit Miles of Electric Transmission Line Ratio and the Electric Peak Load Ratio
- Generating Unit MW Capacity Ratio

Public Affairs
- Three Factor Formula
- Weighted Avg of the Number of Customers Ratio and Number of Employees Ratio

Legal
- Three Factor Formula

Rates
- Sales Ratio

Finance
- Three Factor Formula

Name of Respondent	This Report is:	Date of Report (Mo, Da, Yr)	Year/Period of Report
Duke Energy Kentucky, Inc.	(1) X An Original (2) _ A Resubmission	/ /	2008/Q4

FOOTNOTE DATA

Rights of Way
- Circuit Miles of Electric Transmission Lines Ratio
- Circuit Miles of Electric Distribution Lines Ratio

Internal Auditing
- Three Factor Formula

Environmental, Health and Safety
- Three Factor Formula
- Sales Ratio

Fuels
- Sales Ratio

Investor Relations
- Three Factor Formula

Planning
- Three Factor Formula

Executive
- Three Factor Formula

Definition Key - Inventory Transactions

COMPANY	DESCRIPTION
010	Duke Energy Ohio
070	Duke Energy Kentucky
100	Duke Energy Indiana

Meters and Transformers Provided by Affiliate to Duke Energy Kentucky
For the Year Ended December 31, 2008

DEK Electric Meters transferred to DEK from DEI or DEO for the year 2008

ldg_asset_id	utility_acc	gl_account_id	company_id	gl_posting_mo_yr	activity_code	gl_je_code	work_orde	posting_quantity	posting_amount	in_service_year	description	long_description
178369719	37001	101000	75084	12/1/2008 0:00	UTRT	PPXFER	39936	7	1,192.76	12/31/2003 0:00	Work Order Addition	2008 transfer Nov 07 to Oct 08 PSI to ULHP
178369796	37001	101000	75084	12/1/2008 0:00	UTRT	PPXFER	39936	2	2,504.39	12/31/2000 0:00	Work Order Addition	2008 transfer Nov 07 to Oct 08 PSI to ULHP
178369766	37001	101000	75084	12/1/2008 0:00	UTRT	PPXFER	39936	1	193.90	12/1/2005 0:00	Work Order Addition	2008 transfer Nov 07 to Oct 08 PSI to ULHP
178369715	37001	101000	75084	12/1/2008 0:00	UTRT	PPXFER	39936	1	134.00	12/31/2001 0:00	Work Order Addition	2008 transfer Nov 07 to Oct 08 PSI to ULHP
178369768	37001	101000	75084	12/1/2008 0:00	UTRT	PPXFER	39936	2	780.04	12/1/2006 0:00	Work Order Addition	2008 transfer Nov 07 to Oct 08 PSI to ULHP
178369794	37001	101000	75084	12/1/2008 0:00	UTRT	PPXFER	39936	68	34,970.05	12/1/2007 0:00	Work Order Addition	2008 transfer Nov 07 to Oct 08 PSI to ULHP
178369786	37001	101000	75084	12/1/2008 0:00	UTRT	PPXFER	39936	2	1,172.57	12/31/1999 0:00	Work Order Addition	2008 transfer Nov 07 to Oct 08 PSI to ULHP
178369788	37001	101000	75084	12/1/2008 0:00	UTRT	PPXFER	39936	12	6,296.15	12/31/2000 0:00	Work Order Addition	2008 transfer Nov 07 to Oct 08 PSI to ULHP
178369697	37001	101000	75084	12/1/2008 0:00	UTRT	PPXFER	39936	3	308.76	12/1/2007 0:00	Work Order Addition	2008 transfer Nov 07 to Oct 08 PSI to ULHP
178369721	37001	101000	75084	12/1/2008 0:00	UTRT	PPXFER	39936	5	1,169.92	12/1/2004 0:00	Work Order Addition	2008 transfer Nov 07 to Oct 08 PSI to ULHP
178369713	37001	101000	75084	12/1/2008 0:00	UTRT	PPXFER	39936	3	405.39	12/31/2001 0:00	Work Order Addition	2008 transfer Nov 07 to Oct 08 PSI to ULHP
178369691	37000	101000	75084	12/1/2008 0:00	UTRT	PPXFER	39936	1	75.59	12/1/1997 0:00	1-101-3700	2008 transfer Nov 07 to Oct 08 PSI to ULHP
178369802	37000	101000	75084	12/1/2008 0:00	UTRT	PPXFER	39936	5	2,288.51	12/1/1994 0:00	1-101-3700	2008 transfer Nov 07 to Oct 08 PSI to ULHP
178369762	37001	101000	75084	12/1/2008 0:00	UTRT	PPXFER	39936	1	411.84	12/1/2004 0:00	Work Order Addition	2008 transfer Nov 07 to Oct 08 PSI to ULHP
178369792	37001	101000	75084	12/1/2008 0:00	UTRT	PPXFER	39936	6	2,709.10	12/1/2005 0:00	Work Order Addition	2008 transfer Nov 07 to Oct 08 PSI to ULHP
178369790	37001	101000	75084	12/1/2008 0:00	UTRT	PPXFER	39936	8	3,499.39	12/1/2004 0:00	Work Order Addition	2008 transfer Nov 07 to Oct 08 PSI to ULHP
178369770	37001	101000	75084	12/1/2008 0:00	UTRT	PPXFER	39936	2	823.33	12/1/2007 0:00	Work Order Addition	2008 transfer Nov 07 to Oct 08 PSI to ULHP
178369784	37000	101000	75084	12/1/2008 0:00	UTRT	PPXFER	39936	2	915.40	12/1/1994 0:00	1-101-3700	2008 transfer Nov 07 to Oct 08 PSI to ULHP
178369758	37001	101000	75084	12/1/2008 0:00	UTRT	PPXFER	39936	1	382.28	12/31/2000 0:00	Work Order Addition	2008 transfer Nov 07 to Oct 08 PSI to ULHP
178369760	37001	101000	75084	12/1/2008 0:00	UTRT	PPXFER	39936	1	403.33	12/31/2001 0:00	Work Order Addition	2008 transfer Nov 07 to Oct 08 PSI to ULHP
178369717	37001	101000	75084	12/1/2008 0:00	UTRT	PPXFER	39936	1	90.21	12/31/2002 0:00	Work Order Addition	2008 transfer Nov 07 to Oct 08 PSI to ULHP
178369695	37001	101000	75084	12/1/2008 0:00	UTRT	PPXFER	39936	2	187.82	12/1/2006 0:00	Work Order Addition	2008 transfer Nov 07 to Oct 08 PSI to ULHP
178369723	37001	101000	75084	12/1/2008 0:00	UTRT	PPXFER	39936	3	396.60	12/1/2005 0:00	Work Order Addition	2008 transfer Nov 07 to Oct 08 PSI to ULHP
178369798	37001	101000	75084	12/1/2008 0:00	UTRT	PPXFER	39936	1	871.33	12/31/2001 0:00	Work Order Addition	2008 transfer Nov 07 to Oct 08 PSI to ULHP
178369711	37001	101000	75084	12/1/2008 0:00	UTRT	PPXFER	39936	3	405.70	12/31/2000 0:00	Work Order Addition	2008 transfer Nov 07 to Oct 08 PSI to ULHP
178369725	37001	101000	75084	12/1/2008 0:00	UTRT	PPXFER	39936	2	273.60	12/1/2007 0:00	Work Order Addition	2008 transfer Nov 07 to Oct 08 PSI to ULHP
178369800	37001	101000	75084	12/1/2008 0:00	UTRT	PPXFER	39936	5	4,223.14	12/31/2003 0:00	Work Order Addition	2008 transfer Nov 07 to Oct 08 PSI to ULHP
178369764	37001	101000	75084	12/1/2008 0:00	UTRT	PPXFER	39936	2	579.07	12/1/2005 0:00	Work Order Addition	2008 transfer Nov 07 to Oct 08 PSI to ULHP
178369693	37001	101000	75084	12/1/2008 0:00	UTRT	PPXFER	39936	2	166.91	12/1/2005 0:00	Work Order Addition	2008 transfer Nov 07 to Oct 08 PSI to ULHP
			Total transfer of Electric Meters from DEI to DEK					**154**	**67,831.08**			

ldg_asset_id	utility_acc	gl_account_id	company_id	gl_posting_mo_yr	activity_code	gl_je_code	work_orde	posting_quantity	posting_amount	in_service_year	description	long_description
178249302	37001	101000	75084	12/1/2008 0:00	UTRT	PPXFER	20004	5	1,070.20	12/31/2002 0:00	Work Order Addition	transfer ele meters from CGE to ULHP
178249300	37001	101000	75084	12/1/2008 0:00	UTRT	PPXFER	20004	18	6,474.20	12/31/2001 0:00	Work Order Addition	transfer ele meters from CGE to ULHP
178249298	37001	101000	75084	12/1/2008 0:00	UTRT	PPXFER	20004	1	382.28	12/31/2000 0:00	Work Order Addition	transfer ele meters from CGE to ULHP
178249296	37001	101000	75084	12/1/2008 0:00	UTRT	PPXFER	20004	1	510.75	12/31/1999 0:00	Work Order Addition	transfer ele meters from CGE to ULHP
178249284	37001	101000	75084	12/1/2008 0:00	UTRT	PPXFER	20004	42	8,531.03	12/1/2007 0:00	Work Order Addition	transfer ele meters from CGE to ULHP
178249282	37001	101000	75084	12/1/2008 0:00	UTRT	PPXFER	20004	75	16,230.79	12/1/2006 0:00	Work Order Addition	transfer ele meters from CGE to ULHP
178249280	37001	101000	75084	12/1/2008 0:00	UTRT	PPXFER	20004	7	1,277.47	12/1/2005 0:00	Work Order Addition	transfer ele meters from CGE to ULHP
178249278	37001	101000	75084	12/1/2008 0:00	UTRT	PPXFER	20004	3	473.03	12/1/2004 0:00	Work Order Addition	transfer ele meters from CGE to ULHP
178249276	37001	101000	75084	12/1/2008 0:00	UTRT	PPXFER	20004	3	594.53	12/31/2003 0:00	Work Order Addition	transfer ele meters from CGE to ULHP
178249274	37001	101000	75084	12/1/2008 0:00	UTRT	PPXFER	20004	2	342.59	12/31/2002 0:00	Work Order Addition	transfer ele meters from CGE to ULHP
178249272	37001	101000	75084	12/1/2008 0:00	UTRT	PPXFER	20004	2	270.26	12/31/2001 0:00	Work Order Addition	transfer ele meters from CGE to ULHP
178249270	37001	101000	75084	12/1/2008 0:00	UTRT	PPXFER	20004	1	110.17	12/31/2000 0:00	Work Order Addition	transfer ele meters from CGE to ULHP
178249249	37001	101000	75084	12/1/2008 0:00	UTRT	PPXFER	20004	26	3,080.87	12/1/2007 0:00	Work Order Addition	transfer ele meters from CGE to ULHP
178249247	37001	101000	75084	12/1/2008 0:00	UTRT	PPXFER	20004	12	1,153.48	12/1/2006 0:00	Work Order Addition	transfer ele meters from CGE to ULHP
178249479	37001	101000	75084	12/1/2008 0:00	UTRT	PPXFER	20004	1	2,713.43	12/31/2001 0:00	Work Order Addition	transfer ele meters from CGE to ULHP
178249245	37001	101000	75084	12/1/2008 0:00	UTRT	PPXFER	20004	2	166.91	12/1/2005 0:00	Work Order Addition	transfer ele meters from CGE to ULHP
178249477	37001	101000	75084	12/1/2008 0:00	UTRT	PPXFER	20004	19	18,614.61	12/1/2006 0:00	Work Order Addition	transfer ele meters from CGE to ULHP
178249475	37001	101000	75084	12/1/2008 0:00	UTRT	PPXFER	20004	3	2,308.47	12/1/2005 0:00	Work Order Addition	transfer ele meters from CGE to ULHP
178249243	37001	101000	75084	12/1/2008 0:00	UTRT	PPXFER	20004	2	165.48	12/1/2004 0:00	Work Order Addition	transfer ele meters from CGE to ULHP
178249471	37001	101000	75084	12/1/2008 0:00	UTRT	PPXFER	20004	9	6,499.98	12/31/2003 0:00	Work Order Addition	transfer ele meters from CGE to ULHP
178249241	37001	101000	75084	12/1/2008 0:00	UTRT	PPXFER	20004	1	84.01	12/31/2003 0:00	Work Order Addition	transfer ele meters from CGE to ULHP
178249469	37001	101000	75084	12/1/2008 0:00	UTRT	PPXFER	20004	3	2,337.52	12/31/2002 0:00	Work Order Addition	transfer ele meters from CGE to ULHP
178249467	37001	101000	75084	12/1/2008 0:00	UTRT	PPXFER	20004	5	5,374.56	12/31/2001 0:00	Work Order Addition	transfer ele meters from CGE to ULHP
178249239	37001	101000	75084	12/1/2008 0:00	UTRT	PPXFER	20004	1	84.31	12/31/2002 0:00	Work Order Addition	transfer ele meters from CGE to ULHP
178249473	37001	101000	75084	12/1/2008 0:00	UTRT	PPXFER	20004	1	706.41	12/1/2004 0:00	Work Order Addition	transfer ele meters from CGE to ULHP
178249465	37001	101000	75084	12/1/2008 0:00	UTRT	PPXFER	20004	5	6,260.97	12/31/2000 0:00	Work Order Addition	transfer ele meters from CGE to ULHP
178249463	37000	101000	75084	12/1/2008 0:00	UTRT	PPXFER	20004	3	5,099.99	12/1/1996 0:00	1-101-3700	transfer ele meters from CGE to ULHP
178249237	37001	101000	75084	12/1/2008 0:00	UTRT	PPXFER	20004	1	59.28	12/31/2000 0:00	Work Order Addition	transfer ele meters from CGE to ULHP
178249481	37001	101000	75084	12/1/2008 0:00	UTRT	PPXFER	20004	2	279.36	12/31/2003 0:00	Work Order Addition	transfer ele meters from CGE to ULHP
178249461	37000	101000	75084	12/1/2008 0:00	UTRT	PPXFER	20004	3	4,177.88	12/1/1993 0:00	1-101-3700	transfer ele meters from CGE to ULHP
178249384	37001	101000	75084	12/1/2008 0:00	UTRT	PPXFER	20004	46	27,110.35	12/1/2007 0:00	Work Order Addition	transfer ele meters from CGE to ULHP
178249235	37001	101000	75084	12/1/2008 0:00	UTRT	PPXFER	20004	1	86.84	12/31/1999 0:00	Work Order Addition	transfer ele meters from CGE to ULHP
178249382	37001	101000	75084	12/1/2008 0:00	UTRT	PPXFER	20004	40	22,002.67	12/1/2006 0:00	Work Order Addition	transfer ele meters from CGE to ULHP
178249380	37001	101000	75084	12/1/2008 0:00	UTRT	PPXFER	20004	51	23,027.37	12/1/2005 0:00	Work Order Addition	transfer ele meters from CGE to ULHP
178249193	37000	101000	75084	12/1/2008 0:00	UTRT	PPXFER	20004	1	87.49	12/1/1998 0:00	1-101-3700	transfer ele meters from CGE to ULHP
178249378	37001	101000	75084	12/1/2008 0:00	UTRT	PPXFER	20004	23	11,263.37	12/1/2004 0:00	Work Order Addition	transfer ele meters from CGE to ULHP
178249376	37001	101000	75084	12/1/2008 0:00	UTRT	PPXFER	20004	19	7,959.40	12/31/2003 0:00	Work Order Addition	transfer ele meters from CGE to ULHP

Meters and Transformers Provided by Affiliate to Duke Energy Kentucky
For the Year Ended December 31, 2008

178249191	37000	101000	75084	12/1/2008 0:00	UTRT	PPXFER	20004	1	74.86	12/1/1997 0:00	1-101-3700	transfer ele meters from CGE to ULHP
178249374	37001	101000	75084	12/1/2008 0:00	UTRT	PPXFER	20004	15	7,319.13	12/31/2002 0:00	Work Order Addition	transfer ele meters from CGE to ULHP
178249372	37001	101000	75084	12/1/2008 0:00	UTRT	PPXFER	20004	42	20,838.84	12/31/2001 0:00	Work Order Addition	transfer ele meters from CGE to ULHP
178249189	37000	101000	75084	12/1/2008 0:00	UTRT	PPXFER	20004	1	69.23	12/1/1994 0:00	1-101-3700	transfer ele meters from CGE to ULHP
178249370	37001	101000	75084	12/1/2008 0:00	UTRT	PPXFER	20004	21	11,081.25	12/31/2000 0:00	Work Order Addition	transfer ele meters from CGE to ULHP
178249368	37001	101000	75084	12/1/2008 0:00	UTRT	PPXFER	20004	5	2,931.42	12/31/1999 0:00	Work Order Addition	transfer ele meters from CGE to ULHP
178249187	37000	101000	75084	12/1/2008 0:00	UTRT	PPXFER	20004	3	188.96	12/1/1993 0:00	1-101-3700	transfer ele meters from CGE to ULHP
178249366	37001	101000	75084	12/1/2008 0:00	UTRT	PPXFER	20004	4	2,345.14	12/31/1999 0:00	Work Order Addition	transfer ele meters from CGE to ULHP
178249364	37001	101000	75084	12/1/2008 0:00	UTRT	PPXFER	20004	4	2,345.14	12/31/1999 0:00	Work Order Addition	transfer ele meters from CGE to ULHP
178249185	37000	101000	75084	12/1/2008 0:00	UTRT	PPXFER	20004	1	76.99	12/1/1988 0:00	1-101-3700	transfer ele meters from CGE to ULHP
178249362	37001	101000	75084	12/1/2008 0:00	UTRT	PPXFER	20004	1	586.28	12/31/1999 0:00	Work Order Addition	transfer ele meters from CGE to ULHP
178249352	37000	101000	75084	12/1/2008 0:00	UTRT	PPXFER	20004	1	570.13	12/1/1998 0:00	6-101-3700	transfer ele meters from CGE to ULHP
178249350	37000	101000	75084	12/1/2008 0:00	UTRT	PPXFER	20004	12	6,606.54	12/1/1997 0:00	1-101-3700	transfer ele meters from CGE to ULHP
178249348	37000	101000	75084	12/1/2008 0:00	UTRT	PPXFER	20004	5	1,372.97	12/1/1997 0:00	6-101-3700	transfer ele meters from CGE to ULHP
178249346	37000	101000	75084	12/1/2008 0:00	UTRT	PPXFER	20004	1	274.60	12/1/1997 0:00	6-101-3700	transfer ele meters from CGE to ULHP
178249344	37000	101000	75084	12/1/2008 0:00	UTRT	PPXFER	20004	1	445.61	12/1/1996 0:00	6-101-3700	transfer ele meters from CGE to ULHP
178249342	37000	101000	75084	12/1/2008 0:00	UTRT	PPXFER	20004	3	1,833.37	12/1/1996 0:00	1-101-3700	transfer ele meters from CGE to ULHP
178249340	37000	101000	75084	12/1/2008 0:00	UTRT	PPXFER	20004	4	2,016.83	12/1/1994 0:00	1-101-3700	transfer ele meters from CGE to ULHP
178249338	37000	101000	75084	12/1/2008 0:00	UTRT	PPXFER	20004	1	274.41	12/1/1980 0:00	1-101-3700	transfer ele meters from CGE to ULHP
178249312	37001	101000	75084	12/1/2008 0:00	UTRT	PPXFER	20004	10	4,116.62	12/1/2007 0:00	Work Order Addition	transfer ele meters from CGE to ULHP
178249310	37001	101000	75084	12/1/2008 0:00	UTRT	PPXFER	20004	28	11,635.00	12/1/2006 0:00	Work Order Addition	transfer ele meters from CGE to ULHP
178249308	37001	101000	75084	12/1/2008 0:00	UTRT	PPXFER	20004	6	1,737.20	12/1/2005 0:00	Work Order Addition	transfer ele meters from CGE to ULHP
178249306	37001	101000	75084	12/1/2008 0:00	UTRT	PPXFER	20004	28	8,699.37	12/1/2004 0:00	Work Order Addition	transfer ele meters from CGE to ULHP
178249304	37001	101000	75084	12/1/2008 0:00	UTRT	PPXFER	20004	2	601.67	12/31/2003 0:00	Work Order Addition	transfer ele meters from CGE to ULHP
			Total transfer of Electric Meters from DEO to DEK					640	275,013.87			
			Total transfer of Electric Meters to DEK					794	342,844.95			

DEK Gas Meters transferred to DEK from DEO for the year 2008

ldg_asset_id	utility_acc	gl_account_id	company_id	gl_posting_mo_yr	activity_code	gl_je_code	work_orde	posting_quantity	posting_amount	in_service_year	description	long_description
178303877	28100	101000	75086	12/1/2008 0:00	UTRT	PPXFER	20062	5	273.24	12/1/1996 0:00	1-101-2810	Intercompany gas meter transfers Nov 1 2007-Oct 31 2008
178303848	28100	101000	75086	12/1/2008 0:00	UTRT	PPXFER	20062	6	312.53	12/1/1995 0:00	1-101-2810	Intercompany gas meter transfers Nov 1 2007-Oct 31 2008
178303535	28100	101000	75086	12/1/2008 0:00	UTRT	PPXFER	20062	1	48.27	12/1/1988 0:00	1-101-2810	Intercompany gas meter transfers Nov 1 2007-Oct 31 2008
178303696	28100	101000	75086	12/1/2008 0:00	UTRT	PPXFER	20062	1	49.08	12/1/1989 0:00	1-101-2810	Intercompany gas meter transfers Nov 1 2007-Oct 31 2008
178303690	28100	101000	75086	12/1/2008 0:00	UTRT	PPXFER	20062	1	48.27	12/1/1988 0:00	1-101-2810	Intercompany gas meter transfers Nov 1 2007-Oct 31 2008
178303767	28100	101000	75086	12/1/2008 0:00	UTRT	PPXFER	20062	2	105.93	12/1/1994 0:00	1-101-2810	Intercompany gas meter transfers Nov 1 2007-Oct 31 2008
178303503	28100	101000	75086	12/1/2008 0:00	UTRT	PPXFER	20062	1	37.65	12/1/1979 0:00	1-101-2810	Intercompany gas meter transfers Nov 1 2007-Oct 31 2008
178303714	28100	101000	75086	12/1/2008 0:00	UTRT	PPXFER	20062	1	55.64	12/1/1993 0:00	1-101-2810	Intercompany gas meter transfers Nov 1 2007-Oct 31 2008
178303698	28100	101000	75086	12/1/2008 0:00	UTRT	PPXFER	20062	1	50.39	12/1/1990 0:00	1-101-2810	Intercompany gas meter transfers Nov 1 2007-Oct 31 2008
178303908	28100	101000	75086	12/1/2008 0:00	UTRT	PPXFER	20062	52	3453.62	12/1/1997 0:00	1-101-2810	Intercompany gas meter transfers Nov 1 2007-Oct 31 2008
178303191	28100	101000	75086	12/1/2008 0:00	UTRT	PPXFER	20062	1	8.14	12/1/1937 0:00	1-101-2810	Intercompany gas meter transfers Nov 1 2007-Oct 31 2008
178304645	28100	101000	75086	12/1/2008 0:00	UTRT	PPXFER	20062	1	712.53	12/1/1960 0:00	1-101-2810	Intercompany gas meter transfers Nov 1 2007-Oct 31 2008
178304591	28101	101000	75086	12/1/2008 0:00	UTRT	PPXFER	20062	25	1719.85	12/1/2007 0:00	Work Order Addition	Intercompany gas meter transfers Nov 1 2007-Oct 31 2008
178304593	28101	101000	75086	12/1/2008 0:00	UTRT	PPXFER	20062	3	211.83	12/1/2007 0:00	Work Order Addition	Intercompany gas meter transfers Nov 1 2007-Oct 31 2008
178304587	28101	101000	75086	12/1/2008 0:00	UTRT	PPXFER	20062	22	1399.97	12/1/2006 0:00	Work Order Addition	Intercompany gas meter transfers Nov 1 2007-Oct 31 2008
178304637	28100	101000	75086	12/1/2008 0:00	UTRT	PPXFER	20062	1	1284.29	12/1/1998 0:00	1-101-2810	Intercompany gas meter transfers Nov 1 2007-Oct 31 2008
178304607	28101	101000	75086	12/1/2008 0:00	UTRT	PPXFER	20062	5	3498.52	12/1/2007 0:00	Work Order Addition	Intercompany gas meter transfers Nov 1 2007-Oct 31 2008
178304585	28101	101000	75086	12/1/2008 0:00	UTRT	PPXFER	20062	8	526.31	12/1/2005 0:00	Work Order Addition	Intercompany gas meter transfers Nov 1 2007-Oct 31 2008
178304599	28101	101000	75086	12/1/2008 0:00	UTRT	PPXFER	20062	1	986.94	12/31/2003 0:00	Work Order Addition	Intercompany gas meter transfers Nov 1 2007-Oct 31 2008
178304597	28101	101000	75086	12/1/2008 0:00	UTRT	PPXFER	20062	1	185.66	12/1/2006 0:00	Work Order Addition	Intercompany gas meter transfers Nov 1 2007-Oct 31 2008
178304635	28100	101000	75086	12/1/2008 0:00	UTRT	PPXFER	20062	1	206.42	12/1/1997 0:00	1-101-2810	Intercompany gas meter transfers Nov 1 2007-Oct 31 2008
178304603	28101	101000	75086	12/1/2008 0:00	UTRT	PPXFER	20062	1	863.04	12/1/2006 0:00	Work Order Addition	Intercompany gas meter transfers Nov 1 2007-Oct 31 2008
178304631	28100	101000	75086	12/1/2008 0:00	UTRT	PPXFER	20062	1	95.72	12/1/1979 0:00	6-101-2810	Intercompany gas meter transfers Nov 1 2007-Oct 31 2008
178304627	28100	101000	75086	12/1/2008 0:00	UTRT	PPXFER	20062	1	25.55	12/1/1936 0:00	1-101-2810	Intercompany gas meter transfers Nov 1 2007-Oct 31 2008
178304641	28100	101000	75086	12/1/2008 0:00	UTRT	PPXFER	20062	1	1284.29	12/1/1998 0:00	1-101-2810	Intercompany gas meter transfers Nov 1 2007-Oct 31 2008
178304609	28101	101000	75086	12/1/2008 0:00	UTRT	PPXFER	20062	1	1705.03	12/1/2007 0:00	Work Order Addition	Intercompany gas meter transfers Nov 1 2007-Oct 31 2008
178304595	28101	101000	75086	12/1/2008 0:00	UTRT	PPXFER	20062	1	186.99	12/1/2005 0:00	Work Order Addition	Intercompany gas meter transfers Nov 1 2007-Oct 31 2008
178304615	28101	101000	75086	12/1/2008 0:00	UTRT	PPXFER	20062	1	13005.77	12/1/2006 0:00	Work Order Addition	Intercompany gas meter transfers Nov 1 2007-Oct 31 2008
178304621	28100	101000	75086	12/1/2008 0:00	UTRT	PPXFER	20062	1	81.6	12/1/1997 0:00	1-101-2810	Intercompany gas meter transfers Nov 1 2007-Oct 31 2008
			Total transfer of Gas Meters to DEK from DEO					148	32,423.07			

DEK Transformers transferred to DEK from DEO for the year 2008

ldg_asset_id	utility_acc	gl_account_id	company_id	gl_posting_mo_yr	activity_code	gl_je_code	work_orde	posting_quantity	posting_amount	in_service_year	description	long_description
178369955	36800	101000	75084	12/1/2008 0:00	UTRT	PPXFER	20005	8	22,841.08	12/1/2007 0:00	Work Order Addition	2008 transformer transfer Nov 07 to Sept 08 CGE to ULHP
178369953	36800	101000	75084	12/1/2008 0:00	UTRT	PPXFER	20005	1	2,031.27	12/1/2005 0:00	Work Order Addition	2008 transformer transfer Nov 07 to Sept 08 CGE to ULHP
178370014	36800	101000	75084	12/1/2008 0:00	UTRT	PPXFER	20005	1	4,932.97	12/1/2005 0:00	Work Order Addition	2008 transformer transfer Nov 07 to Sept 08 CGE to ULHP
178369951	36800	101000	75084	12/1/2008 0:00	UTRT	PPXFER	20005	1	1,278.48	1/1/2002 0:00	Work Order Addition	2008 transformer transfer Nov 07 to Sept 08 CGE to ULHP
178369975	36800	101000	75084	12/1/2008 0:00	UTRT	PPXFER	20005	2	2,536.53	12/1/2004 0:00	Work Order Addition	2008 transformer transfer Nov 07 to Sept 08 CGE to ULHP

Meters and Transformers Provided by Affiliate to Duke Energy Kentucky
For the Year Ended December 31, 2008

178369949	36800	101000	75084	12/1/2008 0:00	UTRT	PPXFER	20005	1	2,330.28	12/31/2000 0:00	Work Order Addition	2008 transformer transfer Nov 07 to Sept 08 CGE to ULHP
178369943	36800	101000	75084	12/1/2008 0:00	UTRT	PPXFER	20005	1	859.19	12/1/2005 0:00	Work Order Addition	2008 transformer transfer Nov 07 to Sept 08 CGE to ULHP
178369988	36800	101000	75084	12/1/2008 0:00	UTRT	PPXFER	20005	1	39,963.48	12/1/2007 0:00	Work Order Addition	2008 transformer transfer Nov 07 to Sept 08 CGE to ULHP
178369973	36800	101000	75084	12/1/2008 0:00	UTRT	PPXFER	20005	1	1,249.31	1/1/2003 0:00	Work Order Addition	2008 transformer transfer Nov 07 to Sept 08 CGE to ULHP
178369986	36800	101000	75084	12/1/2008 0:00	UTRT	PPXFER	20005	2	48,432.66	12/1/2006 0:00	Work Order Addition	2008 transformer transfer Nov 07 to Sept 08 CGE to ULHP
178369984	36800	101000	75084	12/1/2008 0:00	UTRT	PPXFER	20005	2	47,486.01	12/1/2007 0:00	Work Order Addition	2008 transformer transfer Nov 07 to Sept 08 CGE to ULHP
178369969	36800	101000	75084	12/1/2008 0:00	UTRT	PPXFER	20005	3	3,414.15	12/1/1999 0:00	6-101-3680	2008 transformer transfer Nov 07 to Sept 08 CGE to ULHP
178369941	36800	101000	75084	12/1/2008 0:00	UTRT	PPXFER	20005	1	886.61	3/1/2005 0:00	Work Order Addition	2008 transformer transfer Nov 07 to Sept 08 CGE to ULHP
178370024	36800	101000	75084	12/1/2008 0:00	UTRT	PPXFER	20005	3	54,394.05	12/1/2007 0:00	Work Order Addition	2008 transformer transfer Nov 07 to Sept 08 CGE to ULHP
178369971	36800	101000	75084	12/1/2008 0:00	UTRT	PPXFER	20005	1	1,219.41	12/31/2002 0:00	Work Order Addition	2008 transformer transfer Nov 07 to Sept 08 CGE to ULHP
178369935	36800	101000	75084	12/1/2008 0:00	UTRT	PPXFER	20005	2	1,473.32	12/31/2000 0:00	Work Order Addition	2008 transformer transfer Nov 07 to Sept 08 CGE to ULHP
178369929	36800	101000	75084	12/1/2008 0:00	UTRT	PPXFER	20005	1	950.59	12/1/1997 0:00	6-101-3680	2008 transformer transfer Nov 07 to Sept 08 CGE to ULHP
178370020	36800	101000	75084	12/1/2008 0:00	UTRT	PPXFER	20005	1	12,568.61	12/1/2006 0:00	Work Order Addition	2008 transformer transfer Nov 07 to Sept 08 CGE to ULHP
178369927	36800	101000	75084	12/1/2008 0:00	UTRT	PPXFER	20005	5	4,321.08	12/1/1996 0:00	1-101-3680	2008 transformer transfer Nov 07 to Sept 08 CGE to ULHP
178370022	36800	101000	75084	12/1/2008 0:00	UTRT	PPXFER	20005	2	33,423.23	12/1/2007 0:00	Work Order Addition	2008 transformer transfer Nov 07 to Sept 08 CGE to ULHP
178370002	36800	101000	75084	12/1/2008 0:00	UTRT	PPXFER	20005	6	55,104.76	12/1/2006 0:00	Work Order Addition	2008 transformer transfer Nov 07 to Sept 08 CGE to ULHP
178370026	36800	101000	75084	12/1/2008 0:00	UTRT	PPXFER	20005	13	35,739.39	12/1/2007 0:00	Work Order Addition	2008 transformer transfer Nov 07 to Sept 08 CGE to ULHP
178369992	36800	101000	75084	12/1/2008 0:00	UTRT	PPXFER	20005	2	17,655.52	12/1/2007 0:00	Work Order Addition	2008 transformer transfer Nov 07 to Sept 08 CGE to ULHP
178369939	36800	101000	75084	12/1/2008 0:00	UTRT	PPXFER	20005	3	2,742.23	12/1/2004 0:00	Work Order Addition	2008 transformer transfer Nov 07 to Sept 08 CGE to ULHP
178370016	36800	101000	75084	12/1/2008 0:00	UTRT	PPXFER	20005	8	50,985.68	12/1/2007 0:00	Work Order Addition	2008 transformer transfer Nov 07 to Sept 08 CGE to ULHP
178369947	36800	101000	75084	12/1/2008 0:00	UTRT	PPXFER	20005	98	59,315.72	12/1/2007 0:00	Work Order Addition	2008 transformer transfer Nov 07 to Sept 08 CGE to ULHP
178369937	36800	101000	75084	12/1/2008 0:00	UTRT	PPXFER	20005	1	751.91	1/1/2003 0:00	Work Order Addition	2008 transformer transfer Nov 07 to Sept 08 CGE to ULHP
178369981	36800	101000	75084	12/1/2008 0:00	UTRT	PPXFER	20005	66	121,817.07	12/1/2007 0:00	Work Order Addition	2008 transformer transfer Nov 07 to Sept 08 CGE to ULHP
178369933	36800	101000	75084	12/1/2008 0:00	UTRT	PPXFER	20005	1	795.33	12/1/1999 0:00	6-101-3680	2008 transformer transfer Nov 07 to Sept 08 CGE to ULHP
178369979	36800	101000	75084	12/1/2008 0:00	UTRT	PPXFER	20005	8	11,374.65	12/1/2006 0:00	Work Order Addition	2008 transformer transfer Nov 07 to Sept 08 CGE to ULHP
178369977	36800	101000	75084	12/1/2008 0:00	UTRT	PPXFER	20005	2	2,738.52	12/1/2005 0:00	Work Order Addition	2008 transformer transfer Nov 07 to Sept 08 CGE to ULHP
178369945	36800	101000	75084	12/1/2008 0:00	UTRT	PPXFER	20005	7	7,435.59	12/1/2006 0:00	Work Order Addition	2008 transformer transfer Nov 07 to Sept 08 CGE to ULHP
178369931	36800	101000	75084	12/1/2008 0:00	UTRT	PPXFER	20005	1	945.15	12/1/1998 0:00	1-101-3680	2008 transformer transfer Nov 07 to Sept 08 CGE to ULHP
			Total transfer of Transformers from DEO to DEK					256	653,993.83			

Meters Provided by Duke Energy Kentucky to Affiliate
For the Year Ended December 31, 2008

DEK Electric Meters transferred from DEK to DEI or DEO for the year 2008

ldg_asset_id	utility_acc	gl_account_id	company_	gl_posting_mo_yr	activity_code	gl_je_code	work_orde	posting_quantity	posting_amount	in_service_year	description	long_description
178281932	37000	101000	75084	12/1/2008 0:00	UTRF	PPXFER	28004	(1)	(458.56)	12/1/1997 0:00	6-101-3700	Dec Ele Meter transfer ULHP to PSI
13808256	37000	101000	75084	12/1/2008 0:00	UTRF	PPXFER	28004	(1)	(550.55)	12/1/1997 0:00	1-101-3700	Dec Ele Meter transfer ULHP to PSI
18622967	37000	101000	75084	12/1/2008 0:00	UTRF	PPXFER	28004	(4)	(2,202.18)	12/1/1997 0:00	1-101-3700	Dec Ele Meter transfer ULHP to PSI
4024988	37000	101000	75084	12/1/2008 0:00	UTRF	PPXFER	28004	(5)	(2,032.74)	12/1/1994 0:00	6-101-3700	Dec Ele Meter transfer ULHP to PSI
4401059	37001	101000	75084	12/1/2008 0:00	UTRF	PPXFER	28004	(25)	(13,116.97)	12/31/2000 0:00	Work Order Addition	Dec elec meter transfer ULHP to PSI
4021956	37000	101000	75084	12/1/2008 0:00	UTRF	PPXFER	28004	(21)	(589.82)	12/1/1968 0:00	6-101-3700	Electric Meters Transfer from Nov 07 to Oct 08 ULHP to PSI
4021838	37000	101000	75084	12/1/2008 0:00	UTRF	PPXFER	28004	(15)	(392.48)	12/1/1967 0:00	6-101-3700	Electric Meters Transfer from Nov 07 to Oct 08 ULHP to PSI
4024351	37000	101000	75084	12/1/2008 0:00	UTRF	PPXFER	28004	(26)	(1,548.37)	12/1/1983 0:00	6-101-3700	Electric Meters Transfer from Nov 07 to Oct 08 ULHP to PSI
4043797	37000	101000	75084	12/1/2008 0:00	UTRF	PPXFER	28004	(162)	(9,613.08)	12/1/1992 0:00	6-101-3700	Electric Meters Transfer from Nov 07 to Oct 08 ULHP to PSI
4021899	37000	101000	75084	12/1/2008 0:00	UTRF	PPXFER	28004	(23)	(1,243.30)	12/1/1982 0:00	6-101-3700	Electric Meters Transfer from Nov 07 to Oct 08 ULHP to PSI
4043802	37000	101000	75084	12/1/2008 0:00	UTRF	PPXFER	28004	(809)	(61,157.46)	12/1/1997 0:00	6-101-3700	Electric Meters Transfer from Nov 07 to Oct 08 ULHP to PSI
4022092	37000	101000	75084	12/1/2008 0:00	UTRF	PPXFER	28004	(23)	(634.62)	12/1/1974 0:00	6-101-3700	Electric Meters Transfer from Nov 07 to Oct 08 ULHP to PSI
4024984	37000	101000	75084	12/1/2008 0:00	UTRF	PPXFER	28004	(445)	(23,110.02)	12/1/1994 0:00	6-101-3700	Electric Meters Transfer from Nov 07 to Oct 08 ULHP to PSI
4024905	37000	101000	75084	12/1/2008 0:00	UTRF	PPXFER	28004	(150)	(10,240.05)	12/1/1991 0:00	6-101-3700	Electric Meters Transfer from Nov 07 to Oct 08 ULHP to PSI
4025007	37000	101000	75084	12/1/2008 0:00	UTRF	PPXFER	28004	(295)	(18,746.55)	12/1/1995 0:00	6-101-3700	Electric Meters Transfer from Nov 07 to Oct 08 ULHP to PSI
4024474	37000	101000	75084	12/1/2008 0:00	UTRF	PPXFER	28004	(188)	(11,670.17)	12/1/1989 0:00	6-101-3700	Electric Meters Transfer from Nov 07 to Oct 08 ULHP to PSI
4024952	37000	101000	75084	12/1/2008 0:00	UTRF	PPXFER	28004	(323)	(20,169.21)	12/1/1993 0:00	6-101-3700	Electric Meters Transfer from Nov 07 to Oct 08 ULHP to PSI
4024454	37000	101000	75084	12/1/2008 0:00	UTRF	PPXFER	28004	(73)	(4,763.72)	12/1/1988 0:00	6-101-3700	Electric Meters Transfer from Nov 07 to Oct 08 ULHP to PSI
4021903	37000	101000	75084	12/1/2008 0:00	UTRF	PPXFER	28004	(28)	(2,008.58)	12/1/1984 0:00	6-101-3700	Electric Meters Transfer from Nov 07 to Oct 08 ULHP to PSI
4021895	37000	101000	75084	12/1/2008 0:00	UTRF	PPXFER	28004	(19)	(565.35)	12/1/1975 0:00	6-101-3700	Electric Meters Transfer from Nov 07 to Oct 08 ULHP to PSI
4021907	37000	101000	75084	12/1/2008 0:00	UTRF	PPXFER	28004	(149)	(10,812.96)	12/1/1990 0:00	6-101-3700	Electric Meters Transfer from Nov 07 to Oct 08 ULHP to PSI
4023016	37000	101000	75084	12/1/2008 0:00	UTRF	PPXFER	28004	(37)	(1,887.99)	12/1/1978 0:00	6-101-3700	Electric Meters Transfer from Nov 07 to Oct 08 ULHP to PSI
4024403	37000	101000	75084	12/1/2008 0:00	UTRF	PPXFER	28004	(66)	(5,111.61)	12/1/1986 0:00	6-101-3700	Electric Meters Transfer from Nov 07 to Oct 08 ULHP to PSI
4021205	37000	101000	75084	12/1/2008 0:00	UTRF	PPXFER	28004	(18)	(449.46)	12/1/1964 0:00	6-101-3700	Electric Meters Transfer from Nov 07 to Oct 08 ULHP to PSI
4022010	37000	101000	75084	12/1/2008 0:00	UTRF	PPXFER	28004	(32)	(940.73)	12/1/1972 0:00	6-101-3700	Electric Meters Transfer from Nov 07 to Oct 08 ULHP to PSI
4021997	37000	101000	75084	12/1/2008 0:00	UTRF	PPXFER	28004	(27)	(729.75)	12/1/1971 0:00	6-101-3700	Electric Meters Transfer from Nov 07 to Oct 08 ULHP to PSI
4021933	37000	101000	75084	12/1/2008 0:00	UTRF	PPXFER	28004	(12)	(275.78)	12/1/1965 0:00	6-101-3700	Electric Meters Transfer from Nov 07 to Oct 08 ULHP to PSI
4024428	37000	101000	75084	12/1/2008 0:00	UTRF	PPXFER	28004	(109)	(7,298.56)	12/1/1987 0:00	6-101-3700	Electric Meters Transfer from Nov 07 to Oct 08 ULHP to PSI
4043808	37000	101000	75084	12/1/2008 0:00	UTRF	PPXFER	28004	(751)	(49,263.74)	12/1/1998 0:00	6-101-3700	Electric Meters Transfer from Nov 07 to Oct 08 ULHP to PSI
4021834	37000	101000	75084	12/1/2008 0:00	UTRF	PPXFER	28004	(17)	(431.13)	12/1/1966 0:00	6-101-3700	Electric Meters Transfer from Nov 07 to Oct 08 ULHP to PSI
4023002	37000	101000	75084	12/1/2008 0:00	UTRF	PPXFER	28004	(41)	(2,169.89)	12/1/1979 0:00	6-101-3700	Electric Meters Transfer from Nov 07 to Oct 08 ULHP to PSI
4024303	37000	101000	75084	12/1/2008 0:00	UTRF	PPXFER	28004	(22)	(1,165.14)	12/1/1981 0:00	6-101-3700	Electric Meters Transfer from Nov 07 to Oct 08 ULHP to PSI
4023108	37000	101000	75084	12/1/2008 0:00	UTRF	PPXFER	28004	(18)	(839.70)	12/1/1980 0:00	6-101-3700	Electric Meters Transfer from Nov 07 to Oct 08 ULHP to PSI
4025045	37000	101000	75084	12/1/2008 0:00	UTRF	PPXFER	28004	(483)	(38,175.32)	12/1/1996 0:00	6-101-3700	Electric Meters Transfer from Nov 07 to Oct 08 ULHP to PSI
4024378	37000	101000	75084	12/1/2008 0:00	UTRF	PPXFER	28004	(47)	(3,568.37)	12/1/1985 0:00	6-101-3700	Electric Meters Transfer from Nov 07 to Oct 08 ULHP to PSI
4021890	37000	101000	75084	12/1/2008 0:00	UTRF	PPXFER	28004	(14)	(372.32)	12/1/1970 0:00	6-101-3700	Electric Meters Transfer from Nov 07 to Oct 08 ULHP to PSI
4023001	37000	101000	75084	12/1/2008 0:00	UTRF	PPXFER	28004	(32)	(1,331.82)	12/1/1977 0:00	6-101-3700	Electric Meters Transfer from Nov 07 to Oct 08 ULHP to PSI
4021919	37000	101000	75084	12/1/2008 0:00	UTRF	PPXFER	28004	(33)	(1,160.00)	12/1/1976 0:00	6-101-3700	Electric Meters Transfer from Nov 07 to Oct 08 ULHP to PSI
4021981	37000	101000	75084	12/1/2008 0:00	UTRF	PPXFER	28004	(24)	(649.95)	12/1/1969 0:00	6-101-3700	Electric Meters Transfer from Nov 07 to Oct 08 ULHP to PSI
4022057	37000	101000	75084	12/1/2008 0:00	UTRF	PPXFER	28004	(33)	(955.22)	12/1/1973 0:00	6-101-3700	Electric Meters Transfer from Nov 07 to Oct 08 ULHP to PSI
4024987	37000	101000	75084	12/1/2008 0:00	UTRF	PPXFER	28004	(1)	(301.00)	12/1/1994 0:00	6-101-3700	Transfer 2008 Ele Meters from ULHP to PSI
4024954	37000	101000	75084	12/1/2008 0:00	UTRF	PPXFER	28004	(1)	(372.72)	12/1/1993 0:00	6-101-3700	Transfer 2008 Ele Meters from ULHP to PSI
4043798	37000	101000	75084	12/1/2008 0:00	UTRF	PPXFER	28004	(1)	(287.48)	12/1/1992 0:00	6-101-3700	Transfer 2008 Ele Meters from ULHP to PSI
4021909	37000	101000	75084	12/1/2008 0:00	UTRF	PPXFER	28004	(1)	(370.07)	12/1/1990 0:00	6-101-3700	Transfer 2008 Ele Meters from ULHP to PSI
4024430	37000	101000	75084	12/1/2008 0:00	UTRF	PPXFER	28004	(2)	(724.22)	12/1/1987 0:00	6-101-3700	Transfer 2008 Ele Meters from ULHP to PSI
38878115	37001	101000	75084	12/1/2008 0:00	UTRF	PPXFER	28004	(12)	(1,641.58)	12/1/2007 0:00	Work Order Addition	Transfer 2008 Ele Meters from ULHP to PSI
18618813	37001	101000	75084	12/1/2008 0:00	UTRF	PPXFER	28004	(25)	(4,529.84)	12/1/2006 0:00	Work Order Addition	Transfer 2008 Ele Meters from ULHP to PSI
14232758	37001	101000	75084	12/1/2008 0:00	UTRF	PPXFER	28004	(18)	(2,379.58)	12/1/2005 0:00	Work Order Addition	Transfer 2008 Ele Meters from ULHP to PSI
4024988	37000	101000	75084	12/1/2008 0:00	UTRF	PPXFER	28004	(5)	(2,032.74)	12/1/1994 0:00	6-101-3700	Transfer 2008 Ele Meters from ULHP to PSI
8880346	37001	101000	75084	12/1/2008 0:00	UTRF	PPXFER	28004	(12)	(2,807.80)	12/1/2004 0:00	Work Order Addition	Transfer 2008 Ele Meters from ULHP to PSI
4401061	37001	101000	75084	12/1/2008 0:00	UTRF	PPXFER	28004	(9)	(1,533.55)	12/31/2003 0:00	Work Order Addition	Transfer 2008 Ele Meters from ULHP to PSI
4401069	37001	101000	75084	12/1/2008 0:00	UTRF	PPXFER	28004	(15)	(1,353.20)	12/31/2002 0:00	Work Order Addition	Transfer 2008 Ele Meters from ULHP to PSI
4401065	37001	101000	75084	12/1/2008 0:00	UTRF	PPXFER	28004	(14)	(1,876.05)	12/31/2001 0:00	Work Order Addition	Transfer 2008 Ele Meters from ULHP to PSI
4401057	37001	101000	75084	12/1/2008 0:00	UTRF	PPXFER	28004	(1)	(149.20)	12/31/2000 0:00	Work Order Addition	Transfer 2008 Ele Meters from ULHP to PSI
4043809	37000	101000	75084	12/1/2008 0:00	UTRF	PPXFER	28004	(5)	(557.78)	12/1/1998 0:00	6-101-3700	Transfer 2008 Ele Meters from ULHP to PSI
4043803	37000	101000	75084	12/1/2008 0:00	UTRF	PPXFER	28004	(2)	(374.57)	12/1/1997 0:00	6-101-3700	Transfer 2008 Ele Meters from ULHP to PSI
4024986	37000	101000	75084	12/1/2008 0:00	UTRF	PPXFER	28004	(1)	(125.32)	12/1/1994 0:00	6-101-3700	Transfer 2008 Ele Meters from ULHP to PSI
4024953	37000	101000	75084	12/1/2008 0:00	UTRF	PPXFER	28004	(4)	(559.00)	12/1/1993 0:00	6-101-3700	Transfer 2008 Ele Meters from ULHP to PSI
4021908	37000	101000	75084	12/1/2008 0:00	UTRF	PPXFER	28004	(1)	(152.47)	12/1/1990 0:00	6-101-3700	Transfer 2008 Ele Meters from ULHP to PSI
4021904	37000	101000	75084	12/1/2008 0:00	UTRF	PPXFER	28004	(2)	(261.29)	12/1/1984 0:00	6-101-3700	Transfer 2008 Ele Meters from ULHP to PSI
38878111	37001	101000	75084	12/1/2008 0:00	UTRF	PPXFER	28004	(137)	(13,415.01)	12/1/2007 0:00	Work Order Addition	Transfer 2008 Ele Meters from ULHP to PSI
4023110	37000	101000	75084	12/1/2008 0:00	UTRF	PPXFER	28004	(1)	(103.28)	12/1/1980 0:00	6-101-3700	Transfer 2008 Ele Meters from ULHP to PSI
18618809	37001	101000	75084	12/1/2008 0:00	UTRF	PPXFER	28004	(371)	(34,741.28)	12/1/2006 0:00	Work Order Addition	Transfer 2008 Ele Meters from ULHP to PSI
14232754	37001	101000	75084	12/1/2008 0:00	UTRF	PPXFER	28004	(270)	(14,596.92)	12/1/2005 0:00	Work Order Addition	Transfer 2008 Ele Meters from ULHP to PSI

Meters Provided by Duke Energy Kentucky to Affiliate
For the Year Ended December 31, 2008

38878117	37001	101000	75084	12/1/2008 0:00	UTRF	PPXFER	28004	(17)	(8,871.87)	12/1/2007 0:00	Work Order Addition	Transfer 2008 Ele Meters from ULHP to PSI
18618815	37001	101000	75084	12/1/2008 0:00	UTRF	PPXFER	28004	(17)	(8,410.76)	12/1/2006 0:00	Work Order Addition	Transfer 2008 Ele Meters from ULHP to PSI
14232760	37001	101000	75084	12/1/2008 0:00	UTRF	PPXFER	28004	(37)	(11,846.15)	12/1/2005 0:00	Work Order Addition	Transfer 2008 Ele Meters from ULHP to PSI
8880345	37001	101000	75084	12/1/2008 0:00	UTRF	PPXFER	28004	(208)	(19,541.79)	12/1/2004 0:00	Work Order Addition	Transfer 2008 Ele Meters from ULHP to PSI
13808261	37001	101000	75084	12/1/2008 0:00	UTRF	PPXFER	28004	(1)	(437.42)	12/1/2004 0:00	Work Order Addition	Transfer 2008 Ele Meters from ULHP to PSI
178281939	37001	101000	75084	12/1/2008 0:00	UTRF	PPXFER	28004	(11)	(4,608.07)	12/31/2003 0:00	Work Order Addition	Transfer 2008 Ele Meters from ULHP to PSI
178281937	37001	101000	75084	12/1/2008 0:00	UTRF	PPXFER	28004	(4)	(1,951.77)	12/31/2002 0:00	Work Order Addition	Transfer 2008 Ele Meters from ULHP to PSI
4401067	37001	101000	75084	12/1/2008 0:00	UTRF	PPXFER	28004	(24)	(11,353.72)	12/31/2001 0:00	Work Order Addition	Transfer 2008 Ele Meters from ULHP to PSI
4401060	37001	101000	75084	12/1/2008 0:00	UTRF	PPXFER	28004	(387)	(30,410.07)	12/31/2003 0:00	Work Order Addition	Transfer 2008 Ele Meters from ULHP to PSI
4401059	37001	101000	75084	12/1/2008 0:00	UTRF	PPXFER	28004	(9)	(4,722.11)	12/31/2000 0:00	Work Order Addition	Transfer 2008 Ele Meters from ULHP to PSI
178281933	37000	101000	75084	12/1/2008 0:00	UTRF	PPXFER	28004	(1)	(570.13)	12/1/1998 0:00	6-101-3700	Transfer 2008 Ele Meters from ULHP to PSI
178281931	37000	101000	75084	12/1/2008 0:00	UTRF	PPXFER	28004	(2)	(1,139.49)	12/1/1996 0:00	1-101-3700	Transfer 2008 Ele Meters from ULHP to PSI
4024956	37000	101000	75084	12/1/2008 0:00	UTRF	PPXFER	28004	(1)	(520.75)	12/1/1993 0:00	6-101-3700	Transfer 2008 Ele Meters from ULHP to PSI
4401068	37001	101000	75084	12/1/2008 0:00	UTRF	PPXFER	28004	(563)	(30,337.57)	12/31/2002 0:00	Work Order Addition	Transfer 2008 Ele Meters from ULHP to PSI
4043799	37000	101000	75084	12/1/2008 0:00	UTRF	PPXFER	28004	(2)	(834.54)	12/1/1992 0:00	6-101-3700	Transfer 2008 Ele Meters from ULHP to PSI
4024407	37000	101000	75084	12/1/2008 0:00	UTRF	PPXFER	28004	(2)	(924.89)	12/1/1986 0:00	6-101-3700	Transfer 2008 Ele Meters from ULHP to PSI
4024382	37000	101000	75084	12/1/2008 0:00	UTRF	PPXFER	28004	(1)	(362.55)	12/1/1985 0:00	6-101-3700	Transfer 2008 Ele Meters from ULHP to PSI
4401064	37001	101000	75084	12/1/2008 0:00	UTRF	PPXFER	28004	(65)	(6,100.93)	12/31/2001 0:00	Work Order Addition	Transfer 2008 Ele Meters from ULHP to PSI
4401053	37001	101000	75084	12/1/2008 0:00	UTRF	PPXFER	28004	(1,302)	(105,433.35)	12/31/2000 0:00	Work Order Addition	Transfer 2008 Ele Meters from ULHP to PSI
38878116	37001	101000	75084	12/1/2008 0:00	UTRF	PPXFER	28004	(4)	(1,534.53)	12/1/2007 0:00	Work Order Addition	Transfer 2008 Ele Meters from ULHP to PSI
18618814	37001	101000	75084	12/1/2008 0:00	UTRF	PPXFER	28004	(13)	(5,070.27)	12/1/2006 0:00	Work Order Addition	Transfer 2008 Ele Meters from ULHP to PSI
17428377	37001	101000	75084	12/1/2008 0:00	UTRF	PPXFER	28004	(6)	(1,737.20)	12/1/2005 0:00	Work Order Addition	Transfer 2008 Ele Meters from ULHP to PSI
8880347	37001	101000	75084	12/1/2008 0:00	UTRF	PPXFER	28004	(1)	(246.06)	12/1/2004 0:00	Work Order Addition	Transfer 2008 Ele Meters from ULHP to PSI
4401062	37001	101000	75084	12/1/2008 0:00	UTRF	PPXFER	28004	(4)	(1,362.94)	12/31/2003 0:00	Work Order Addition	Transfer 2008 Ele Meters from ULHP to PSI
4401070	37001	101000	75084	12/1/2008 0:00	UTRF	PPXFER	28004	(4)	(856.16)	12/31/2002 0:00	Work Order Addition	Transfer 2008 Ele Meters from ULHP to PSI
4401066	37001	101000	75084	12/1/2008 0:00	UTRF	PPXFER	28004	(21)	(7,401.68)	12/31/2001 0:00	Work Order Addition	Transfer 2008 Ele Meters from ULHP to PSI
4025010	37000	101000	75084	12/1/2008 0:00	UTRF	PPXFER	28004	(9)	(2,695.68)	12/1/1995 0:00	6-101-3700	Transfer 2008 Ele Meters from ULHP to PSI
			Total transfer of Electric Meters from DEK to DEI					(8,228)	(666,931.62)			

ldg_asset_id	utility_acc	gl_account_id	company_	gl_posting_mo_yr	activity_code	gl_je_code	work_orde	posting_quantity	posting_amount	in_service_year	description	long_description
4043802	37000	101000	75084	12/1/2008 0:00	UTRF	PPXFER	28004	(236)	(17,840.74)	12/1/1997 0:00	6-101-3700	Transfer 2008 Ele Meters from ULHP to CGE
4021899	37000	101000	75084	12/1/2008 0:00	UTRF	PPXFER	28004	(3)	(162.17)	12/1/1982 0:00	6-101-3700	Transfer 2008 Ele Meters from ULHP to CGE
4025045	37000	101000	75084	12/1/2008 0:00	UTRF	PPXFER	28004	(206)	(16,281.82)	12/1/1996 0:00	6-101-3700	Transfer 2008 Ele Meters from ULHP to CGE
4023108	37000	101000	75084	12/1/2008 0:00	UTRF	PPXFER	28004	(11)	(513.15)	12/1/1980 0:00	6-101-3700	Transfer 2008 Ele Meters from ULHP to CGE
4043803	37000	101000	75084	12/1/2008 0:00	UTRF	PPXFER	28004	(15)	(2,809.27)	12/1/1997 0:00	6-101-3700	Transfer 2008 Ele Meters from ULHP to CGE
4025042	37000	101000	75084	12/1/2008 0:00	UTRF	PPXFER	28004	(2)	(356.76)	12/1/1996 0:00	6-101-3700	Transfer 2008 Ele Meters from ULHP to CGE
4023016	37000	101000	75084	12/1/2008 0:00	UTRF	PPXFER	28004	(10)	(510.27)	12/1/1978 0:00	6-101-3700	Transfer 2008 Ele Meters from ULHP to CGE
4021919	37000	101000	75084	12/1/2008 0:00	UTRF	PPXFER	28004	(6)	(210.91)	12/1/1976 0:00	6-101-3700	Transfer 2008 Ele Meters from ULHP to CGE
4021895	37000	101000	75084	12/1/2008 0:00	UTRF	PPXFER	28004	(5)	(148.78)	12/1/1975 0:00	6-101-3700	Transfer 2008 Ele Meters from ULHP to CGE
4024456	37000	101000	75084	12/1/2008 0:00	UTRF	PPXFER	28004	(2)	(291.92)	12/1/1988 0:00	6-101-3700	Transfer 2008 Ele Meters from ULHP to CGE
4024405	37000	101000	75084	12/1/2008 0:00	UTRF	PPXFER	28004	(2)	(325.73)	12/1/1986 0:00	6-101-3700	Transfer 2008 Ele Meters from ULHP to CGE
4022092	37000	101000	75084	12/1/2008 0:00	UTRF	PPXFER	28004	(12)	(331.11)	12/1/1974 0:00	6-101-3700	Transfer 2008 Ele Meters from ULHP to CGE
4024906	37000	101000	75084	12/1/2008 0:00	UTRF	PPXFER	28004	(5)	(632.45)	12/1/1991 0:00	6-101-3700	Transfer 2008 Ele Meters from ULHP to CGE
4023001	37000	101000	75084	12/1/2008 0:00	UTRF	PPXFER	28004	(13)	(541.05)	12/1/1977 0:00	6-101-3700	Transfer 2008 Ele Meters from ULHP to CGE
4022057	37000	101000	75084	12/1/2008 0:00	UTRF	PPXFER	28004	(3)	(86.84)	12/1/1973 0:00	6-101-3700	Transfer 2008 Ele Meters from ULHP to CGE
4023002	37000	101000	75084	12/1/2008 0:00	UTRF	PPXFER	28004	(10)	(529.24)	12/1/1979 0:00	6-101-3700	Transfer 2008 Ele Meters from ULHP to CGE
4401065	37001	101000	75084	12/1/2008 0:00	UTRF	PPXFER	28004	(17)	(2,278.06)	12/31/2001 0:00	Work Order Addition	Transfer 2008 Ele Meters from ULHP to CGE
4024303	37000	101000	75084	12/1/2008 0:00	UTRF	PPXFER	28004	(6)	(317.77)	12/1/1981 0:00	6-101-3700	Transfer 2008 Ele Meters from ULHP to CGE
14232758	37001	101000	75084	12/1/2008 0:00	UTRF	PPXFER	28004	(29)	(3,833.77)	12/1/2005 0:00	Work Order Addition	Transfer 2008 Ele Meters from ULHP to CGE
38878115	37001	101000	75084	12/1/2008 0:00	UTRF	PPXFER	28004	(15)	(2,051.97)	12/1/2007 0:00	Work Order Addition	Transfer 2008 Ele Meters from ULHP to CGE
4021903	37000	101000	75084	12/1/2008 0:00	UTRF	PPXFER	28004	(12)	(860.82)	12/1/1984 0:00	6-101-3700	Transfer 2008 Ele Meters from ULHP to CGE
4024378	37000	101000	75084	12/1/2008 0:00	UTRF	PPXFER	28004	(19)	(1,442.53)	12/1/1985 0:00	6-101-3700	Transfer 2008 Ele Meters from ULHP to CGE
4021935	37000	101000	75084	12/1/2008 0:00	UTRF	PPXFER	28004	(3)	(92.81)	12/1/1965 0:00	6-101-3700	Transfer 2008 Ele Meters from ULHP to CGE
4022010	37000	101000	75084	12/1/2008 0:00	UTRF	PPXFER	28004	(10)	(293.98)	12/1/1972 0:00	6-101-3700	Transfer 2008 Ele Meters from ULHP to CGE
4021997	37000	101000	75084	12/1/2008 0:00	UTRF	PPXFER	28004	(3)	(81.08)	12/1/1971 0:00	6-101-3700	Transfer 2008 Ele Meters from ULHP to CGE
4401064	37001	101000	75084	12/1/2008 0:00	UTRF	PPXFER	28004	(24)	(2,252.65)	12/31/2001 0:00	Work Order Addition	Transfer 2008 Ele Meters from ULHP to CGE
4021956	37000	101000	75084	12/1/2008 0:00	UTRF	PPXFER	28004	(14)	(393.22)	12/1/1968 0:00	6-101-3700	Transfer 2008 Ele Meters from ULHP to CGE
4401053	37001	101000	75084	12/1/2008 0:00	UTRF	PPXFER	28004	(413)	(33,443.91)	12/31/2000 0:00	Work Order Addition	Transfer 2008 Ele Meters from ULHP to CGE
18618814	37001	101000	75084	12/1/2008 0:00	UTRF	PPXFER	28004	(10)	(3,900.20)	12/1/2006 0:00	Work Order Addition	Transfer 2008 Ele Meters from ULHP to CGE
4021838	37000	101000	75084	12/1/2008 0:00	UTRF	PPXFER	28004	(9)	(235.49)	12/1/1967 0:00	6-101-3700	Transfer 2008 Ele Meters from ULHP to CGE
4021834	37000	101000	75084	12/1/2008 0:00	UTRF	PPXFER	28004	(2)	(50.72)	12/1/1966 0:00	6-101-3700	Transfer 2008 Ele Meters from ULHP to CGE
4021937	37000	101000	75084	12/1/2008 0:00	UTRF	PPXFER	28004	(1)	(151.55)	12/1/1965 0:00	6-101-3700	Transfer 2008 Ele Meters from ULHP to CGE
178281929	37000	101000	75084	12/1/2008 0:00	UTRF	PPXFER	28004	(1)	(274.41)	12/1/1980 0:00	1-101-3700	Transfer 2008 Ele Meters from ULHP to CGE
4021205	37000	101000	75084	12/1/2008 0:00	UTRF	PPXFER	28004	(9)	(224.73)	12/1/1964 0:00	6-101-3700	Transfer 2008 Ele Meters from ULHP to CGE
4023007	37000	101000	75084	12/1/2008 0:00	UTRF	PPXFER	28004	(1)	(231.55)	12/1/1977 0:00	6-101-3700	Transfer 2008 Ele Meters from ULHP to CGE
38878117	37001	101000	75084	12/1/2008 0:00	UTRF	PPXFER	28004	(12)	(6,262.50)	12/1/2007 0:00	Work Order Addition	Transfer 2008 Ele Meters from ULHP to CGE
4025011	37000	101000	75084	12/1/2008 0:00	UTRF	PPXFER	28004	(7)	(2,834.36)	12/1/1995 0:00	6-101-3700	Transfer 2008 Ele Meters from ULHP to CGE

Meters Provided by Duke Energy Kentucky to Affiliate
For the Year Ended December 31, 2008

178281934	37001	101000	75084	12/1/2008 0:00	UTRF	PPXFER	28004	(14)	(8,207.98)	12/31/1999 0:00	Work Order Addition	Transfer 2008 Ele Meters from ULHP to CGE
4024988	37000	101000	75084	12/1/2008 0:00	UTRF	PPXFER	28004	(6)	(2,439.29)	12/1/1994 0:00	6-101-3700	Transfer 2008 Ele Meters from ULHP to CGE
18618809	37001	101000	75084	12/1/2008 0:00	UTRF	PPXFER	28004	(254)	(23,785.14)	12/1/2006 0:00	Work Order Addition	Transfer 2008 Ele Meters from ULHP to CGE
14232754	37001	101000	75084	12/1/2008 0:00	UTRF	PPXFER	28004	(276)	(14,921.30)	12/1/2005 0:00	Work Order Addition	Transfer 2008 Ele Meters from ULHP to CGE
4401059	37001	101000	75084	12/1/2008 0:00	UTRF	PPXFER	28004	(7)	(3,672.75)	12/31/2000 0:00	Work Order Addition	Transfer 2008 Ele Meters from ULHP to CGE
38878111	37001	101000	75084	12/1/2008 0:00	UTRF	PPXFER	28004	(27)	(2,643.83)	12/1/2007 0:00	Work Order Addition	Transfer 2008 Ele Meters from ULHP to CGE
178281931	37000	101000	75084	12/1/2008 0:00	UTRF	PPXFER	28004	(2)	(1,139.49)	12/1/1996 0:00	1-101-3700	Transfer 2008 Ele Meters from ULHP to CGE
178281932	37000	101000	75084	12/1/2008 0:00	UTRF	PPXFER	28004	(17)	(7,795.55)	12/1/1997 0:00	6-101-3700	Transfer 2008 Ele Meters from ULHP to CGE
8880345	37001	101000	75084	12/1/2008 0:00	UTRF	PPXFER	28004	(78)	(7,328.17)	12/1/2004 0:00	Work Order Addition	Transfer 2008 Ele Meters from ULHP to CGE
178281937	37001	101000	75084	12/1/2008 0:00	UTRF	PPXFER	28004	(6)	(2,927.65)	12/31/2002 0:00	Work Order Addition	Transfer 2008 Ele Meters from ULHP to CGE
8880348	37001	101000	75084	12/1/2008 0:00	UTRF	PPXFER	28004	(33)	(16,162.66)	12/1/2004 0:00	Work Order Addition	Transfer 2008 Ele Meters from ULHP to CGE
4021933	37000	101000	75084	12/1/2008 0:00	UTRF	PPXFER	28004	(1)	(22.98)	12/1/1965 0:00	6-101-3700	Transfer 2008 Ele Meters from ULHP to CGE
4024355	37000	101000	75084	12/1/2008 0:00	UTRF	PPXFER	28004	(1)	(393.70)	12/1/1983 0:00	6-101-3700	Transfer 2008 Ele Meters from ULHP to CGE
4401060	37001	101000	75084	12/1/2008 0:00	UTRF	PPXFER	28004	(117)	(9,193.74)	12/31/2003 0:00	Work Order Addition	Transfer 2008 Ele Meters from ULHP to CGE
13808267	37001	101000	75084	12/1/2008 0:00	UTRF	PPXFER	28004	(1)	(706.41)	12/1/2004 0:00	Work Order Addition	Transfer 2008 Ele Meters from ULHP to CGE
4401067	37001	101000	75084	12/1/2008 0:00	UTRF	PPXFER	28004	(43)	(20,342.08)	12/31/2001 0:00	Work Order Addition	Transfer 2008 Ele Meters from ULHP to CGE
17428696	37001	101000	75084	12/1/2008 0:00	UTRF	PPXFER	28004	(6)	(3,517.71)	12/31/1999 0:00	Work Order Addition	Transfer 2008 Ele Meters from ULHP to CGE
4024458	37000	101000	75084	12/1/2008 0:00	UTRF	PPXFER	28004	(1)	(455.60)	12/1/1988 0:00	6-101-3700	Transfer 2008 Ele Meters from ULHP to CGE
13808230	37001	101000	75084	12/1/2008 0:00	UTRF	PPXFER	28004	(162)	(13,657.83)	12/31/2002 0:00	Work Order Addition	Transfer 2008 Ele Meters from ULHP to CGE
18618815	37001	101000	75084	12/1/2008 0:00	UTRF	PPXFER	28004	(25)	(12,368.77)	12/1/2006 0:00	Work Order Addition	Transfer 2008 Ele Meters from ULHP to CGE
178281945	37000	101000	75084	12/1/2008 0:00	UTRF	PPXFER	28004	(1)	(1,700.00)	12/1/1996 0:00	1-101-3700	Transfer 2008 Ele Meters from ULHP to CGE
14232760	37001	101000	75084	12/1/2008 0:00	UTRF	PPXFER	28004	(79)	(25,293.14)	12/1/2005 0:00	Work Order Addition	Transfer 2008 Ele Meters from ULHP to CGE
4023006	37000	101000	75084	12/1/2008 0:00	UTRF	PPXFER	28004	(1)	(76.46)	12/1/1979 0:00	6-101-3700	Transfer 2008 Ele Meters from ULHP to CGE
4021900	37000	101000	75084	12/1/2008 0:00	UTRF	PPXFER	28004	(2)	(237.36)	12/1/1982 0:00	6-101-3700	Transfer 2008 Ele Meters from ULHP to CGE
4024353	37000	101000	75084	12/1/2008 0:00	UTRF	PPXFER	28004	(1)	(130.09)	12/1/1983 0:00	6-101-3700	Transfer 2008 Ele Meters from ULHP to CGE
17428396	37001	101000	75084	12/1/2008 0:00	UTRF	PPXFER	28004	(2)	(1,444.44)	12/31/2003 0:00	Work Order Addition	Transfer 2008 Ele Meters from ULHP to CGE
4043808	37000	101000	75084	12/1/2008 0:00	UTRF	PPXFER	28004	(200)	(13,119.50)	12/1/1998 0:00	6-101-3700	Transfer 2008 Ele Meters from ULHP to CGE
4024476	37000	101000	75084	12/1/2008 0:00	UTRF	PPXFER	28004	(1)	(144.07)	12/1/1989 0:00	6-101-3700	Transfer 2008 Ele Meters from ULHP to CGE
4021908	37000	101000	75084	12/1/2008 0:00	UTRF	PPXFER	28004	(1)	(152.47)	12/1/1990 0:00	6-101-3700	Transfer 2008 Ele Meters from ULHP to CGE
178281952	37001	101000	75084	12/1/2008 0:00	UTRF	PPXFER	28004	(2)	(1,959.43)	12/1/2006 0:00	Work Order Addition	Transfer 2008 Ele Meters from ULHP to CGE
4024953	37000	101000	75084	12/1/2008 0:00	UTRF	PPXFER	28004	(9)	(1,257.75)	12/1/1993 0:00	6-101-3700	Transfer 2008 Ele Meters from ULHP to CGE
4024986	37000	101000	75084	12/1/2008 0:00	UTRF	PPXFER	28004	(3)	(375.95)	12/1/1994 0:00	6-101-3700	Transfer 2008 Ele Meters from ULHP to CGE
4025009	37000	101000	75084	12/1/2008 0:00	UTRF	PPXFER	28004	(1)	(124.38)	12/1/1995 0:00	6-101-3700	Transfer 2008 Ele Meters from ULHP to CGE
178281946	37001	101000	75084	12/1/2008 0:00	UTRF	PPXFER	28004	(2)	(2,504.39)	12/31/2000 0:00	Work Order Addition	Transfer 2008 Ele Meters from ULHP to CGE
14127579	37001	101000	75084	12/1/2008 0:00	UTRF	PPXFER	28004	(1)	(139.68)	12/31/2003 0:00	Work Order Addition	Transfer 2008 Ele Meters from ULHP to CGE
4043809	37000	101000	75084	12/1/2008 0:00	UTRF	PPXFER	28004	(11)	(1,227.12)	12/1/1998 0:00	6-101-3700	Transfer 2008 Ele Meters from ULHP to CGE
4401057	37001	101000	75084	12/1/2008 0:00	UTRF	PPXFER	28004	(5)	(746.02)	12/31/2000 0:00	Work Order Addition	Transfer 2008 Ele Meters from ULHP to CGE
38878116	37001	101000	75084	12/1/2008 0:00	UTRF	PPXFER	28004	(16)	(6,138.12)	12/1/2007 0:00	Work Order Addition	Transfer 2008 Ele Meters from ULHP to CGE
4401069	37001	101000	75084	12/1/2008 0:00	UTRF	PPXFER	28004	(17)	(1,533.63)	12/31/2002 0:00	Work Order Addition	Transfer 2008 Ele Meters from ULHP to CGE
4401061	37001	101000	75084	12/1/2008 0:00	UTRF	PPXFER	28004	(21)	(3,578.29)	12/31/2003 0:00	Work Order Addition	Transfer 2008 Ele Meters from ULHP to CGE
8880346	37001	101000	75084	12/1/2008 0:00	UTRF	PPXFER	28004	(11)	(2,573.82)	12/1/2004 0:00	Work Order Addition	Transfer 2008 Ele Meters from ULHP to CGE
18622969	37001	101000	75084	12/1/2008 0:00	UTRF	PPXFER	28004	(2)	(279.36)	12/31/2003 0:00	Work Order Addition	Transfer 2008 Ele Meters from ULHP to CGE
18618813	37001	101000	75084	12/1/2008 0:00	UTRF	PPXFER	28004	(52)	(9,422.07)	12/1/2006 0:00	Work Order Addition	Transfer 2008 Ele Meters from ULHP to CGE
4025007	37000	101000	75084	12/1/2008 0:00	UTRF	PPXFER	28004	(92)	(5,846.38)	12/1/1995 0:00	6-101-3700	Transfer 2008 Ele Meters from ULHP to CGE
4024351	37000	101000	75084	12/1/2008 0:00	UTRF	PPXFER	28004	(12)	(714.63)	12/1/1983 0:00	6-101-3700	Transfer 2008 Ele Meters from ULHP to CGE
4401062	37001	101000	75084	12/1/2008 0:00	UTRF	PPXFER	28004	(23)	(7,836.91)	12/31/2003 0:00	Work Order Addition	Transfer 2008 Ele Meters from ULHP to CGE
4024984	37000	101000	75084	12/1/2008 0:00	UTRF	PPXFER	28004	(140)	(7,270.57)	12/1/1994 0:00	6-101-3700	Transfer 2008 Ele Meters from ULHP to CGE
178281953	37001	101000	75084	12/1/2008 0:00	UTRF	PPXFER	28004	(1)	(2,713.43)	12/31/2001 0:00	Work Order Addition	Transfer 2008 Ele Meters from ULHP to CGE
178281939	37001	101000	75084	12/1/2008 0:00	UTRF	PPXFER	28004	(7)	(2,932.41)	12/31/2003 0:00	Work Order Addition	Transfer 2008 Ele Meters from ULHP to CGE
4024952	37000	101000	75084	12/1/2008 0:00	UTRF	PPXFER	28004	(99)	(6,181.90)	12/1/1993 0:00	6-101-3700	Transfer 2008 Ele Meters from ULHP to CGE
4025010	37000	101000	75084	12/1/2008 0:00	UTRF	PPXFER	28004	(4)	(1,198.08)	12/1/1995 0:00	6-101-3700	Transfer 2008 Ele Meters from ULHP to CGE
4043797	37000	101000	75084	12/1/2008 0:00	UTRF	PPXFER	28004	(60)	(3,560.40)	12/1/1992 0:00	6-101-3700	Transfer 2008 Ele Meters from ULHP to CGE
4024905	37000	101000	75084	12/1/2008 0:00	UTRF	PPXFER	28004	(44)	(3,003.75)	12/1/1991 0:00	6-101-3700	Transfer 2008 Ele Meters from ULHP to CGE
4043798	37000	101000	75084	12/1/2008 0:00	UTRF	PPXFER	28004	(2)	(574.96)	12/1/1992 0:00	6-101-3700	Transfer 2008 Ele Meters from ULHP to CGE
4022060	37000	101000	75084	12/1/2008 0:00	UTRF	PPXFER	28004	(1)	(105.66)	12/1/1973 0:00	6-101-3700	Transfer 2008 Ele Meters from ULHP to CGE
4021907	37000	101000	75084	12/1/2008 0:00	UTRF	PPXFER	28004	(67)	(4,862.20)	12/1/1990 0:00	6-101-3700	Transfer 2008 Ele Meters from ULHP to CGE
4024474	37000	101000	75084	12/1/2008 0:00	UTRF	PPXFER	28004	(64)	(3,972.83)	12/1/1989 0:00	6-101-3700	Transfer 2008 Ele Meters from ULHP to CGE
4024454	37000	101000	75084	12/1/2008 0:00	UTRF	PPXFER	28004	(47)	(3,067.06)	12/1/1988 0:00	6-101-3700	Transfer 2008 Ele Meters from ULHP to CGE
4024428	37000	101000	75084	12/1/2008 0:00	UTRF	PPXFER	28004	(44)	(2,946.21)	12/1/1987 0:00	6-101-3700	Transfer 2008 Ele Meters from ULHP to CGE
4024954	37000	101000	75084	12/1/2008 0:00	UTRF	PPXFER	28004	(5)	(1,863.62)	12/1/1993 0:00	6-101-3700	Transfer 2008 Ele Meters from ULHP to CGE
4024987	37000	101000	75084	12/1/2008 0:00	UTRF	PPXFER	28004	(25)	(7,524.95)	12/1/1994 0:00	6-101-3700	Transfer 2008 Ele Meters from ULHP to CGE
4024403	37000	101000	75084	12/1/2008 0:00	UTRF	PPXFER	28004	(33)	(2,555.80)	12/1/1986 0:00	6-101-3700	Transfer 2008 Ele Meters from ULHP to CGE
4401058	37001	101000	75084	12/1/2008 0:00	UTRF	PPXFER	28004	(65)	(20,131.27)	12/31/2000 0:00	Work Order Addition	Transfer 2008 Ele Meters from ULHP to CGE
4401066	37001	101000	75084	12/1/2008 0:00	UTRF	PPXFER	28004	(13)	(4,581.99)	12/31/2001 0:00	Work Order Addition	Transfer 2008 Ele Meters from ULHP to CGE
4401070	37001	101000	75084	12/1/2008 0:00	UTRF	PPXFER	28004	(6)	(1,284.24)	12/31/2002 0:00	Work Order Addition	Transfer 2008 Ele Meters from ULHP to CGE
14127578	37000	101000	75084	12/1/2008 0:00	UTRF	PPXFER	28004	(1)	(1,965.88)	12/1/1997 0:00	1-101-3700	Transfer 2008 Ele Meters from ULHP to CGE
8880347	37001	101000	75084	12/1/2008 0:00	UTRF	PPXFER	28004	(2)	(492.12)	12/1/2004 0:00	Work Order Addition	Transfer 2008 Ele Meters from ULHP to CGE

Meters Provided by Duke Energy Kentucky to Affiliate
For the Year Ended December 31, 2008

17428377	37001	101000	75084	12/1/2008 0:00	UTRF	PPXFER	28004	(26)	(7,527.89)	12/1/2005 0:00	Work Order Addition	Transfer 2008 Ele Meters from ULHP to CGE
			Total transfer of Electric Meters from DEK to DEO					(3,559)	(433,635.60)			
			Total transfer of Electric Meters from DEK					(11,787)	(1,100,567.22)			

DEK Gas Meters transferred from DEK to DEO for the year 2008

ldg_asset_id	utility_acc	gl_account_id	company_	gl_posting_mo_yr	activity_code	gl_je_code	work_orde	posting_quantity	posting_amount	in_service_year	description	long_description
7746681	28101	101000	75086	12/1/2008 0:00	UTRF	PPXFER	28062	(1)	(59.72)	12/31/2000 0:00	Work Order Addition	Incompany sale of Gas meters from DEK To DEO
4026323	28100	101000	75086	12/1/2008 0:00	UTRF	PPXFER	28062	(1)	(63.46)	12/1/1998 0:00	6-101-2810	Incompany sale of Gas meters from DEK To DEO
4026295	28100	101000	75086	12/1/2008 0:00	UTRF	PPXFER	28062	(1)	(50.86)	12/1/1989 0:00	6-101-2810	Incompany sale of Gas meters from DEK To DEO
4025619	28100	101000	75086	12/1/2008 0:00	UTRF	PPXFER	28062	(2)	(109.13)	12/1/1951 0:00	6-101-2810	Intercompany gas meter transfers Nov 1 2007-Oct 31 2008
4026146	28100	101000	75086	12/1/2008 0:00	UTRF	PPXFER	28062	(11)	(1,114.11)	12/1/1980 0:00	6-101-2810	Intercompany gas meter transfers Nov 1 2007-Oct 31 2008
4026147	28100	101000	75086	12/1/2008 0:00	UTRF	PPXFER	28062	(4)	(422.82)	12/1/1982 0:00	6-101-2810	Intercompany gas meter transfers Nov 1 2007-Oct 31 2008
4026145	28100	101000	75086	12/1/2008 0:00	UTRF	PPXFER	28062	(3)	(287.17)	12/1/1979 0:00	6-101-2810	Intercompany gas meter transfers Nov 1 2007-Oct 31 2008
4026298	28100	101000	75086	12/1/2008 0:00	UTRF	PPXFER	28062	(47)	(5,284.10)	12/1/1985 0:00	6-101-2810	Intercompany gas meter transfers Nov 1 2007-Oct 31 2008
4026301	28100	101000	75086	12/1/2008 0:00	UTRF	PPXFER	28062	(7)	(900.90)	12/1/1989 0:00	6-101-2810	Intercompany gas meter transfers Nov 1 2007-Oct 31 2008
4026302	28100	101000	75086	12/1/2008 0:00	UTRF	PPXFER	28062	(11)	(1,410.17)	12/1/1990 0:00	6-101-2810	Intercompany gas meter transfers Nov 1 2007-Oct 31 2008
4026303	28100	101000	75086	12/1/2008 0:00	UTRF	PPXFER	28062	(25)	(3,398.89)	12/1/1991 0:00	6-101-2810	Intercompany gas meter transfers Nov 1 2007-Oct 31 2008
4026326	28100	101000	75086	12/1/2008 0:00	UTRF	PPXFER	28062	(10)	(1,490.65)	12/1/1995 0:00	6-101-2810	Intercompany gas meter transfers Nov 1 2007-Oct 31 2008
4026327	28100	101000	75086	12/1/2008 0:00	UTRF	PPXFER	28062	(14)	(2,315.51)	12/1/1996 0:00	6-101-2810	Intercompany gas meter transfers Nov 1 2007-Oct 31 2008
4026329	28100	101000	75086	12/1/2008 0:00	UTRF	PPXFER	28062	(2)	(403.60)	12/1/1998 0:00	6-101-2810	Intercompany gas meter transfers Nov 1 2007-Oct 31 2008
4026148	28100	101000	75086	12/1/2008 0:00	UTRF	PPXFER	28062	(8)	(751.13)	12/1/1983 0:00	6-101-2810	Intercompany gas meter transfers Nov 1 2007-Oct 31 2008
4026334	28100	101000	75086	12/1/2008 0:00	UTRF	PPXFER	28062	(1)	(790.70)	12/1/1996 0:00	6-101-2810	Intercompany gas meter transfers Nov 1 2007-Oct 31 2008
13808298	28101	101000	75086	12/1/2008 0:00	UTRF	PPXFER	28062	(1)	(148.68)	12/31/2002 0:00	Work Order Addition	Intercompany gas meter transfers Nov 1 2007-Oct 31 2008
7747106	28101	101000	75086	12/1/2008 0:00	UTRF	PPXFER	28062	(3)	(448.15)	12/31/2002 0:00	Work Order Addition	Intercompany gas meter transfers Nov 1 2007-Oct 31 2008
7746684	28101	101000	75086	12/1/2008 0:00	UTRF	PPXFER	28062	(31)	(5,809.06)	12/31/2000 0:00	Work Order Addition	Intercompany gas meter transfers Nov 1 2007-Oct 31 2008
7747107	28101	101000	75086	12/1/2008 0:00	UTRF	PPXFER	28062	(71)	(17,266.12)	12/31/2002 0:00	Work Order Addition	Intercompany gas meter transfers Nov 1 2007-Oct 31 2008
4026151	28100	101000	75086	12/1/2008 0:00	UTRF	PPXFER	28062	(3)	(1,023.04)	12/1/1979 0:00	6-101-2810	Intercompany gas meter transfers Nov 1 2007-Oct 31 2008
4026152	28100	101000	75086	12/1/2008 0:00	UTRF	PPXFER	28062	(3)	(867.76)	12/1/1980 0:00	6-101-2810	Intercompany gas meter transfers Nov 1 2007-Oct 31 2008
4026153	28100	101000	75086	12/1/2008 0:00	UTRF	PPXFER	28062	(94)	(36,816.86)	12/1/1981 0:00	6-101-2810	Intercompany gas meter transfers Nov 1 2007-Oct 31 2008
4026155	28100	101000	75086	12/1/2008 0:00	UTRF	PPXFER	28062	(1)	(672.02)	12/1/1984 0:00	6-101-2810	Intercompany gas meter transfers Nov 1 2007-Oct 31 2008
4026304	28100	101000	75086	12/1/2008 0:00	UTRF	PPXFER	28062	(1)	(545.85)	12/1/1985 0:00	6-101-2810	Intercompany gas meter transfers Nov 1 2007-Oct 31 2008
4026305	28100	101000	75086	12/1/2008 0:00	UTRF	PPXFER	28062	(1)	(522.12)	12/1/1986 0:00	6-101-2810	Intercompany gas meter transfers Nov 1 2007-Oct 31 2008
4026307	28100	101000	75086	12/1/2008 0:00	UTRF	PPXFER	28062	(3)	(1,547.08)	12/1/1988 0:00	6-101-2810	Intercompany gas meter transfers Nov 1 2007-Oct 31 2008
4026308	28100	101000	75086	12/1/2008 0:00	UTRF	PPXFER	28062	(2)	(1,249.51)	12/1/1989 0:00	6-101-2810	Intercompany gas meter transfers Nov 1 2007-Oct 31 2008
4026310	28100	101000	75086	12/1/2008 0:00	UTRF	PPXFER	28062	(3)	(1,797.16)	12/1/1991 0:00	6-101-2810	Intercompany gas meter transfers Nov 1 2007-Oct 31 2008
4026331	28100	101000	75086	12/1/2008 0:00	UTRF	PPXFER	28062	(3)	(2,011.93)	12/1/1993 0:00	6-101-2810	Intercompany gas meter transfers Nov 1 2007-Oct 31 2008
18622980	28100	101000	75086	12/1/2008 0:00	UTRF	PPXFER	28062	(3)	(244.81)	12/1/1997 0:00	1-101-2810	Intercompany gas meter transfers Nov 1 2007-Oct 31 2008
4098659	28100	101000	75086	12/1/2008 0:00	UTRF	PPXFER	28062	(1)	(81.60)	12/1/1997 0:00	1-101-2810	Intercompany gas meter transfers Nov 1 2007-Oct 31 2008
4026335	28100	101000	75086	12/1/2008 0:00	UTRF	PPXFER	28062	(11)	(11,497.69)	12/1/1997 0:00	6-101-2810	Intercompany gas meter transfers Nov 1 2007-Oct 31 2008
7746692	28101	101000	75086	12/1/2008 0:00	UTRF	PPXFER	28062	(4)	(782.73)	12/31/2001 0:00	Work Order Addition	Intercompany gas meter transfers Nov 1 2007-Oct 31 2008
7746685	28101	101000	75086	12/1/2008 0:00	UTRF	PPXFER	28062	(3)	(3,074.18)	12/31/2000 0:00	Work Order Addition	Intercompany gas meter transfers Nov 1 2007-Oct 31 2008
7746693	28101	101000	75086	12/1/2008 0:00	UTRF	PPXFER	28062	(2)	(1,396.56)	12/31/2001 0:00	Work Order Addition	Intercompany gas meter transfers Nov 1 2007-Oct 31 2008
17428439	28101	101000	75086	12/1/2008 0:00	UTRF	PPXFER	28062	(4)	(4,020.82)	12/31/2002 0:00	Work Order Addition	Intercompany gas meter transfers Nov 1 2007-Oct 31 2008
13808302	28101	101000	75086	12/1/2008 0:00	UTRF	PPXFER	28062	(3)	(2,960.82)	12/31/2003 0:00	Work Order Addition	Intercompany gas meter transfers Nov 1 2007-Oct 31 2008
8891110	28101	101000	75086	12/1/2008 0:00	UTRF	PPXFER	28062	(1)	(907.83)	12/1/2004 0:00	Work Order Addition	Intercompany gas meter transfers Nov 1 2007-Oct 31 2008
18618821	28101	101000	75086	12/1/2008 0:00	UTRF	PPXFER	28062	(1)	(1,127.55)	12/1/2006 0:00	Work Order Addition	Intercompany gas meter transfers Nov 1 2007-Oct 31 2008
38878108	28101	101000	75086	12/1/2008 0:00	UTRF	PPXFER	28062	(11)	(8,712.93)	12/1/2007 0:00	Work Order Addition	Intercompany gas meter transfers Nov 1 2007-Oct 31 2008
4025739	28100	101000	75086	12/1/2008 0:00	UTRF	PPXFER	28062	(1)	(733.73)	12/1/1962 0:00	6-101-2810	Intercompany gas meter transfers Nov 1 2007-Oct 31 2008
4026343	28100	101000	75086	12/1/2008 0:00	UTRF	PPXFER	28062	(2)	(4,104.01)	12/1/1998 0:00	6-101-2810	Intercompany gas meter transfers Nov 1 2007-Oct 31 2008
7747110	28101	101000	75086	12/1/2008 0:00	UTRF	PPXFER	28062	(2)	(3,488.81)	12/31/2002 0:00	Work Order Addition	Intercompany gas meter transfers Nov 1 2007-Oct 31 2008
17428447	28101	101000	75086	12/1/2008 0:00	UTRF	PPXFER	28062	(1)	(2,412.02)	12/1/2005 0:00	Work Order Addition	Intercompany gas meter transfers Nov 1 2007-Oct 31 2008
18618822	28101	101000	75086	12/1/2008 0:00	UTRF	PPXFER	28062	(2)	(2,935.78)	12/1/2006 0:00	Work Order Addition	Intercompany gas meter transfers Nov 1 2007-Oct 31 2008
38878109	28101	101000	75086	12/1/2008 0:00	UTRF	PPXFER	28062	(12)	(20,332.35)	12/1/2007 0:00	Work Order Addition	Intercompany gas meter transfers Nov 1 2007-Oct 31 2008
4026287	28100	101000	75086	12/1/2008 0:00	UTRF	PPXFER	28062	(1)	(4,716.15)	12/1/1981 0:00	6-101-2810	Intercompany gas meter transfers Nov 1 2007-Oct 31 2008
18622971	28100	101000	75086	12/1/2008 0:00	UTRF	PPXFER	28062	(1)	(9.11)	12/1/1946 0:00	1-101-2810	Intercompany gas meter transfers Nov 1 2007-Oct 31 2008
4026323	28100	101000	75086	12/1/2008 0:00	UTRF	PPXFER	28062	(2)	(126.93)	12/1/1998 0:00	6-101-2810	Intercompany gas meter transfers Nov 1 2007-Oct 31 2008
4026319	28100	101000	75086	12/1/2008 0:00	UTRF	PPXFER	28062	(4)	(228.52)	12/1/1994 0:00	6-101-2810	Intercompany gas meter transfers Nov 1 2007-Oct 31 2008
4026320	28100	101000	75086	12/1/2008 0:00	UTRF	PPXFER	28062	(21)	(1,173.84)	12/1/1995 0:00	6-101-2810	Intercompany gas meter transfers Nov 1 2007-Oct 31 2008
4026321	28100	101000	75086	12/1/2008 0:00	UTRF	PPXFER	28062	(28)	(1,525.01)	12/1/1996 0:00	6-101-2810	Intercompany gas meter transfers Nov 1 2007-Oct 31 2008
4026322	28100	101000	75086	12/1/2008 0:00	UTRF	PPXFER	28062	(735)	(52,263.95)	12/1/1997 0:00	6-101-2810	Intercompany gas meter transfers Nov 1 2007-Oct 31 2008
4026323	28100	101000	75086	12/1/2008 0:00	UTRF	PPXFER	28062	(20)	(1,269.30)	12/1/1998 0:00	6-101-2810	Intercompany gas meter transfers Nov 1 2007-Oct 31 2008
7747644	28101	101000	75086	12/1/2008 0:00	UTRF	PPXFER	28062	(3)	(180.75)	12/31/2003 0:00	Work Order Addition	Intercompany gas meter transfers Nov 1 2007-Oct 31 2008
13808287	28101	101000	75086	12/1/2008 0:00	UTRF	PPXFER	28062	(1)	(65.52)	12/31/2002 0:00	Work Order Addition	Intercompany gas meter transfers Nov 1 2007-Oct 31 2008

Meters Provided by Duke Energy Kentucky to Affiliate
For the Year Ended December 31, 2008

8891109	28101	101000	75086	12/1/2008 0:00	UTRF	PPXFER	28062	(6)	(336.50)	12/1/2004 0:00	Work Order Addition	Intercompany gas meter transfers Nov 1 2007-Oct 31 2008
14232761	28101	101000	75086	12/1/2008 0:00	UTRF	PPXFER	28062	(3)	(363.79)	12/1/2005 0:00	Work Order Addition	Intercompany gas meter transfers Nov 1 2007-Oct 31 2008
18618816	28101	101000	75086	12/1/2008 0:00	UTRF	PPXFER	28062	(19)	(1,102.85)	12/1/2006 0:00	Work Order Addition	Intercompany gas meter transfers Nov 1 2007-Oct 31 2008
38878103	28101	101000	75086	12/1/2008 0:00	UTRF	PPXFER	28062	(28)	(1,901.59)	12/1/2007 0:00	Work Order Addition	Intercompany gas meter transfers Nov 1 2007-Oct 31 2008
13808289	28100	101000	75086	12/1/2008 0:00	UTRF	PPXFER	28062	(17)	(1,387.27)	12/1/1997 0:00	1-101-2810	Intercompany gas meter transfers Nov 1 2007-Oct 31 2008
4026332	28100	101000	75086	12/1/2008 0:00	UTRF	PPXFER	28062	(1)	(683.31)	12/1/1994 0:00	6-101-2810	Intercompany gas meter transfers Nov 1 2007-Oct 31 2008
17428430	28101	101000	75086	12/1/2008 0:00	UTRF	PPXFER	28062	(7)	(1,130.83)	12/31/2000 0:00	Work Order Addition	Intercompany gas meter transfers Nov 1 2007-Oct 31 2008
17428423	28100	101000	75086	12/1/2008 0:00	UTRF	PPXFER	28062	(6)	(489.62)	12/1/1997 0:00	1-101-2810	Intercompany gas meter transfers Nov 1 2007-Oct 31 2008
7746682	28101	101000	75086	12/1/2008 0:00	UTRF	PPXFER	28062	(2)	(279.48)	12/31/2000 0:00	Work Order Addition	Intercompany gas meter transfers Nov 1 2007-Oct 31 2008
13808290	28101	101000	75086	12/1/2008 0:00	UTRF	PPXFER	28062	(1)	(133.17)	12/31/2001 0:00	Work Order Addition	Intercompany gas meter transfers Nov 1 2007-Oct 31 2008
13808291	28101	101000	75086	12/1/2008 0:00	UTRF	PPXFER	28062	(1)	(172.37)	12/31/2002 0:00	Work Order Addition	Intercompany gas meter transfers Nov 1 2007-Oct 31 2008
13808288	28101	101000	75086	12/1/2008 0:00	UTRF	PPXFER	28062	(1)	(28.39)	12/1/2004 0:00	Work Order Addition	Intercompany gas meter transfers Nov 1 2007-Oct 31 2008
4026336	28100	101000	75086	12/1/2008 0:00	UTRF	PPXFER	28062	(12)	(12,946.72)	12/1/1998 0:00	6-101-2810	Intercompany gas meter transfers Nov 1 2007-Oct 31 2008
4026144	28100	101000	75086	12/1/2008 0:00	UTRF	PPXFER	28062	(2)	(151.78)	12/1/1977 0:00	6-101-2810	Intercompany gas meter transfers Nov 1 2007-Oct 31 2008
38878107	28101	101000	75086	12/1/2008 0:00	UTRF	PPXFER	28062	(4)	(274.74)	12/1/2007 0:00	Work Order Addition	Intercompany gas meter transfers Nov 1 2007-Oct 31 2008
18618820	28101	101000	75086	12/1/2008 0:00	UTRF	PPXFER	28062	(9)	(534.89)	12/1/2006 0:00	Work Order Addition	Intercompany gas meter transfers Nov 1 2007-Oct 31 2008
17428418	28101	101000	75086	12/1/2008 0:00	UTRF	PPXFER	28062	(1)	(59.27)	12/31/2001 0:00	Work Order Addition	Intercompany sales of gas meters from DEK to DEO
			Total transfer of Gas Meters from DEK to DEO					**(1,368)**	**(241,928.13)**			

Inventory Provided by Affiliate to Duke Energy Kentucky
For the Year Ended December 31, 2008

COMPANY_SOL	CATALOG_DESC	Values Sum of SumOfTRANS_AMT	Sum of SumOfTRANS_QTY
010	ABRASIVE, ROLL, SANDING, 1-1/2IN X 36IN, EMERY, 120 GRIT, RESIN/CLOTH	$ 85.80	78
	ABRASIVE, ROLL, SANDING, 1-1/2IN X 36IN, EMERY, 50 GRIT, CLOTH	$ 55.46	63
	ABRASIVE, ROLL, UTILITY, 2IN X 50FT, BLUE GRIT, 50 GRIT, CLOTH BACKING, K224	$ 64.52	2
	ABRASIVE, SHEET, SANDING, 9IN X 11IN, EMERY, MEDIUM GRIT, J WEIGHT CLOTH BACKING	$ 46.02	50
	ABSORBENT, FLOOR SWEEP, SAND AND OIL, RED, 100 LB BOX	$ (16.64)	-1
	ABSORBENT, OIL, PAD, 17IN X 19IN APPROX, 100 PER PKG	$ 268.40	724
	ABSORBENT, OIL, ROLL, 30IN WD X 150 FT LG X 3/8IN THK	$ 139.12	2
	ABSORBENT, OIL/WATER, DRY GRANULAR, 1.35 CU. FT. 25# BAG	$ 387.40	65
	ADAPTER, CONDUIT, FEMALE, 2IN NOM INL, FEMALE THD, 2IN NOM OUT, SOCKET, PVC, STD PKG/30	$ 1.58	4
	ADAPTER, CONDUIT, MALE, 2IN NOM INL, MALE THD, 2-21/32IN OUT, SOCKET, PVC, STD PKG/50	$ 5.49	16
	ADAPTER, ELECTROFUSION, 4.0 MM INL, 4.0 MM OUT, BRASS	$ 1,012.50	18
	ADAPTER, ELECTROFUSION, 4.0 MM INL, 4.7 MM OUT, BRASS, TO CONVERT FRIATEC AND INNOGAZ DIANE CONTROL	$ 303.75	6
	ADAPTER, GAS METER SWIVEL, 45 LT(1-1/2INMPT), BLACK MALLABLE IRON, INSULATED, STRAIGHT, 2.94IN LONG	$ 101.62	30
	ADAPTER, HOSE TO PIPE, 1-1/2IN, MPT, 1-1/2IN, 45LT SWIVEL, STEEL	$ 113.31	45
	ADAPTER, JUMPER POST TONGUE, 954 COND, ALUM CLAMP STEEL HDWR, 69 OR 138KV INSULATOR	$ 249.88	6
	ADAPTER, PIN RISER, 5-1/4IN LG, LEAD, JUMPER SUPPORT	$ 173.76	39
	ADAPTER, PIPE, 1/2IN CTS INL, COMPRESSION, 3/4IN OUT, MNPT, STEEL ASTM A105, STIFFNER INCLUDED FOR 1/2IN POLYETHYLENE	$ 275.45	55
	ADAPTER, PIPE, 1/2IN INL, MNPT, 3/4IN OUT, COMPRESSION, BRASS, STIFFNER INCLUDED FOR 1/2IN CTS PE 2406	$ 289.00	17
	ADAPTER, PIPE, 1-1/4IN INL, COMPRESSION, 1-1/4IN OUT, MPT, CARBON STEEL, INSULO" WITH INSULATING GASKET ANDPLASTIC LOCK RING W/1-1/4 FPT	$ 2,737.15	186
	ADAPTER, PIPE, 1-1/4IN INL, MNPT, 1IN OUT, COMPRESSION, BRASS, W/ STIFFENER FOR 1IN CTS POLYETHYLENE	$ 377.61	19
	ADAPTER, PIPE, 1-1/4IN INL, MPT, 1-1/4IN OUT, COMPRESSION WITH BEAD TIP GASKET, BRASS, FOR COPPER TUBING	$ 21.89	1
	ADAPTER, PIPE, 12IN INL, BUTT FUSION, 12IN OUT, STEEL BEVELED, STEEL AND PE 2406, TRANSITION FITTING	$ 583.33	1
	ADAPTER, PIPE, 1IN CTS INL, COMPRESSION, 1IN OUT, MNPT, MALLEABLE IRON ASTM A105, STIFFENER INCLUDED FOR POLYETHYLENE	$ 4,429.05	238
	ADAPTER, PIPE, 1IN CTS INL, COMPRESSION, 3/4IN OUT, MPT, STEEL ASTM A105, STIFFNER INCLUDED FOR 1IN CTS POLYETYLENE	$ 185.71	16
	ADAPTER, PIPE, 1IN INL, BUTT FUSION, 3/4IN OUT, MPT, BRASS AND POLYETHYLENE, PE TO BE 18IN IN LENGTH	$ 7,440.28	441
	ADAPTER, PIPE, 1IN INL, MNPT, 1IN OUT, COMPRESSION, BRASS, INCLUDES STIFFNER FOR PLASTIC PIPE	$ 569.74	30
	ADAPTER, PIPE, 1IN INL, MPT, 1-1/4IN OUT, COMPRESSION, STEEL ASTM A105, W/ INSUL GASKET AND PLAS LOCKING RING W/ FPT	$ 783.23	81
	ADAPTER, PIPE, 2IN INL, BUTT FUSION, 2IN OUT, BEVELED, PE 2406 AND STEEL, GRADE B	$ 320.84	20
	ADAPTER, PIPE, 3/4IN INL, FNPT F/ FULL LENGTH OF THE COUPLING, 1IN OUT, MNPT, X- HEAVY CARBON STEEL, SYPHON COUPLING	$ 1,169.90	93
	ADAPTER, PIPE, 3/4IN INL, MNPT, 1IN OUT, COMPRESSION, BRASS, STIFFNER INCLUDED FOR 1IN CTS PE2406	$ 591.46	26
	ADAPTER, PIPE, 3/4IN INL, MPT, 3/4IN O.D. OUT, COMPRESSION, STEEL, NON STD. SIZE PIPE	$ 310.50	54
	ADAPTER, PIPE, 3/4IN INL, MPT, 3/4IN OUT, COMPRESSION, BRASS, FOR COPPER TUBING	$ 241.56	15
	ADAPTER, PIPE, 3/4IN INL, THD, 3/4IN OUT, COMPRESSION, MALLABLE IRON, INSULOK	$ 712.22	80
	ADAPTER, POLE RISER, U-GUARD, 2IN ID X 5IN OD, HMW POLYETHLENE, LARGE BOOT	$ 3,181.89	115
	ADAPTER, RAISED FACE, 3", ANSI 150 X 2" FPT, CARBON STEEL	$ 303.60	8
	ADAPTER, SERVICE HEAD, 1-1/2IN FNPTX1IN CTSX1-1/2IN MNPT, STEEL, .099 WALL POLYETHYLENE	$ 1,324.68	60
	ADAPTER, SERVICE HEAD, 1-1/2IN MPT X 1-1/4IN FPT X 1IN CTS PE, CARBON STEEL ASTM A108, F/RENEW GAS SERVICES W/1IN CTS SDR	$ 658.52	40
	ADAPTER, SERVICE HEAD, 1-1/2INFNPTX1-1/4INCTSX2INMNPTOUTLET, MALLEABLE IRON, .090 WALL POLYETHYLENE	$ 206.08	8
	ADAPTER, SERVICE HEAD, 1IN FNPT X 5/8IN O.D. PE, MALLEABLE OR STEEL, FOR 1/2 CTS PE	$ 416.08	28
	ADAPTER, SERVICE HEAD, 1IN MPT X 1-1/4IN M FLEX THD X 1IN CTS PE, CARBON STEEL	$ 375.51	18
	ADAPTER, SWIVEL, 10 LT, STEEL, 1.00 OFFSET, 3.12 LONG	$ 108.86	100
	ADAPTER, TEST PLUG, 1/2IN THD X 3/4IN MNPT, CARBON STEEL, FOR TESTING CONTINENTAL TEES	$ 17.14	1
	ADAPTER, TRUNION, 2-1/2IN, POLYMER INSULATOR, ALUM ALLOY, 2800# ULTIMATE	$ 237.71	6
	ADAPTER, TUBE TO PIPE, 1-1/4IN, SOLDER, 1-1/4IN, MPT, COPPER	$ 262.44	58
	ADAPTER, TUBE TO PIPE, 2IN, SOLDER, 2IN, MNPT, WROUGHT COPPER	$ 28.59	3
	ADAPTER, TUBE TO PIPE, 3/4IN, SOLDER, 3/4IN, MNPT, WROUGHT COPPER	$ 50.94	42
	ADHESIVE, CEMENT, PVC, 1 QT CAN, ALL WEATHER, CLEAR W/DAUBER, STD PKG/12	$ 8.06	1
	ADHESIVE, GASKET SEALANT #2, 11 OZ TUBE, FORM-A-GASKET, NON HARDENING, PLIABLE	$ 5.76	1
	ANCHOR, POWER, EXPANDING,8 WAY, 10IN EXPANDING, 14,000 LBS, STEEL, EXPANDING AREA -200 SQUARE INCHES	$ 832.62	44
	ANCHOR, POWER, EXPANDING, 12IN, 18,000 LBS, STEEL, EXPANDED AREA-300 SQUARE INCHES	$ 787.16	28
	ANCHOR, POWER, KEY EXPANDING POLE, 7IN X 8-1/4IN DIA, 3/4IN ROD, GALV STEEL, 26IN TO 27-1/4IN EXPANDED	$ 948.20	30
	ANCHOR, POWER, SCREW DOUBLE HELIX, 10IN AND 11-5/16IN DIA HELIX, 1-1/2IN X 5FT ROD, GALV STEEL, PAINTED TYPE SS	$ 265.92	4
	ANCHOR, POWER, SCREW SINGLE HELIX, 11-5/16IN HELIX, 3/4IN OR 1IN ROD, 6000 FT LB, GALV STEEL, PAINTED	$ 149.22	9
	ANCHOR, POWER, SCREW SINGLE HELIX, 14IN DIA, 2-1/2IN X 2-1/2IN - 1IN DIA ROD, 22,000 LBS, 15,000 FT-LBS, HIGH STRENGTH CARBON STL, LARGE HUB	$ 7,208.64	132
	ANCHOR, POWER, SCREW SINGLE HELIX, 14IN DIA, 2-1/8IN X 2-1/8IN - 1IN DIA ROD, 22,000 LBS, 8000 FT-LBS, HIGH STRENGTH CARBON STL, SMALL HUB	$ 10,980.68	278
	ANCHOR, SCREW, EXPANSION SHIELD, 5/8IN DRL, 5/8IN X 1-1/2IN ANC, 5/16IN SCR, ALUMINUM, 50 EA/BX	$ 158.43	264
	ANCHOR, SCREW, HOLLOW WALL, 3/16IN DRL, 3/16IN X 7/8IN ANC, 8-10 SCR, PLASTIC, 100 EA/BX	$ 0.43	1

Inventory Provided by Affiliate to Duke Energy Kentucky
For the Year Ended December 31, 2008

COMPANY_SOL CATALOG_DESC	Values Sum of SumOfTRANS_AMT	Sum of SumOfTRANS_QTY
ANODE, 17 POUND, MAGNESIUM, HIGH RESISTANCE SOIL AREAS ONLY	$ 14,332.17	215
ANODE, 3 POUND, 4IN DIA, 5IN LG, MAGNESIUM	$ 29.66	2
APRON, INDUSTRIAL, 35IN WD X 45IN LG, NEOPRENE	$ 6.93	1
ARBOR, HOLE SAW, 7/16 HEX, 9/16IN TO 1-3/8IN DIA, 1/4IN DIA, #1	$ 63.47	14
ARBOR, HOLE SAW, 7/16IN HEX, 1-1/4IN TO 6IN DIA, 1/4IN DIA, #2	$ 150.66	18
ARM, CABLE, 10IN LG, LEXAN	$ 576.67	31
ARM, MAST ARM, TRUSS STYLE, 15 FT. LONG, 36 INCH RISE, ALUM. F/HAPCO POLES, 2 TAPER ALUM TUBES(3 1/2IN O.D.) .125IN WALL	$ 256.77	1
ARM, MAST ARM, TRUSS STYLE, 8 FT. LONG, 36IN RISE, ALUM. F/HAPCO POLES, 2 TAPERED ALUM TUBES(3IN O.D.) .125IN WALL	$ 216.00	1
ARM, MAST, 1-1/4IN X 30IN LG, ALUMINUM, UPSWEEP	$ 374.49	16
ARM, MAST, 2IN WD X 6FT LG, ALUM, UPSWP	$ 228.73	4
ARM, MAST, 2IN X 12FT LG, ALUM, RISE:39IN-46IN TAPER,2IN PLAIN END, TRUSS	$ 2,819.98	19
ARM, MAST, 2IN X 15FT LG, ALUM, RISE: 37IN, 2IN PLAIN END, TRUSS	$ 1,276.92	7
ARM, MAST, 2IN X 18IN LG, GALV. STEEL, FLOODLIGHT	$ 720.83	25
ARM, MAST, 2IN X 39IN X 10 FT. ALUM, PLAIN END	$ 403.77	2
ARM, MAST, 2IN X 4FT, ALUM, RISE-15IN-24IN TAPER, 2IN PLAIN END PIPE,	$ 245.42	7
ARM, MAST, 2IN X 8FT LG, ALUM, RISE:24IN-34IN,TAPER, 2IN PLAIN END, UPSWEEP	$ 423.00	6
ARM, MAST, 2IN X16FT LG, ALUM, RISE: 37IN, TRUSS	$ 711.00	3
ARRESTER, ELECTRICAL, SURGE, DISTRIBUTION, 10KV 8.4KV MCOV, POLYMER SURGE, METAL OXIDE, STD LINE	$ 7,741.63	348
ARRESTER, ELECTRICAL, SURGE, DISTRIBUTION, 10KV, 8.4KV MCOV, METAL OXIDE, PARKING STAND	$ 4,068.57	27
ARRESTER, ELECTRICAL, SURGE, DISTRIBUTION, 10KV, 8.4KV MCOV, POLYMER,LOAD BREAK ELBOW, DEAD FRONT PADMOUNT	$ 2,630.81	48
ARRESTER, LOW PROFILE METER BASE SURGE, UP TO 320 AMPS, STD PKG - 12 PER/CASE	$ 28,415.48	400
ASSEMBLY, *, FLAG	$ 549.90	26
ASSEMBLY, *, TEST CAP HOSE	$ 46.66	2
AXE, SINGLE BIT, 4 LB, 36IN	$ 116.35	6
BAG, DISPOSABLE URINAL, LIQUID WASTE, POLYETHYLENE, 4.5IN X 6.5IN, POUCH AND ANTISEPTIC HAND WIPE	$ 11,445.56	8,079
BAG, GENERAL PURPOSE, BURLAP, 16IN W X 24IN L, CAN BE USED FOR SAND BAGS	$ 502.77	400
BAG, GENERAL PURPOSE, PAPER, 5 LB EXTRA HEAVY ADVANCE, 500 BAGS / PACK	$ 14.80	1
BAG, GLOVE, CANVAS, RED, 8IN X 12IN, LOW VOLTAGE RUBBER GLOVES, BLACK LETTERING	$ 64.71	6
BAG, GLOVE, CANVAS, YELLOW, 18IN X 8IN X 4IN, FOR RUBBER VOLTAGE GLOVES	$ 11.61	1
BAG, LINER, TRASH CAN, POLYURETHANE, 24IN X 24IN, 1000 BG/BX	$ 20.06	1
BAG, TOOL, CANVAS, 15-3/4IN LG X 6-7/8IN W X 10IN HT, GREEN, STENCILED PROPERTY OF DUKE ENERGY	$ 236.16	4
BAG, TOOL, CANVAS, 15-3/4IN LG X 6-7/8IN WD X 10IN HT, GREEN STENCILED "PROPERTY OF DUKE ENERGY"	$ 58.00	1
BAG, TOOL, CANVAS, 21IN HT, GLOVE, TWO SECTIONS EACH W/ SNAP LOCK COVERS	$ 126.74	7
BAG, TOOL, CANVAS, 9IN X 10IN, UTILIY, W/INSIDE POCKET, TOP OPENING	$ 995.85	44
BAG, TOOL, DUCK CANVAS, 15IN LG X 7IN W X 9-1/2IN HT, BLACK SPLICERS	$ 1,107.00	18
BAG, TOOL, HEAVYWEIGHT CANVAS, 18IN LG X 4IN WD X 19-1/2IN HT, AERIAL BASKET BAG, WHITE	$ 661.95	19
BAG, TOOL, HVY CANVAS BODY, 12IN DIA X 15IN HT, PLASTIC BOTTOM, W/PVC S TYPE HOOK	$ 1,272.01	48
BAG, TOOL, LEATHER, FOUR POCKET, LEFT HAND HOLSTER	$ 441.56	10
BAG, TOOL, RUBBER GAS, NYLON / CANVAS, 4IN, FOR 4IN GAS MAIN	$ 200.00	5
BAG, TOOL, RUBBER GAS, NYLON / CANVAS, 8IN, FOR 8IN GAS MAIN	$ 252.00	4
BAG, TRASH 20-30 GALLON, PLASTIC, 30IN X 37IN (17 MICRONS THK), COLOR NATURAL - (250) PER CASE	$ 222.34	2,025
BAG, TRASH, PLASTIC, 39IN WD X 56IN LG X 1.7 MIL THK, 55 GALLON, HEAVY (50/ROLL) STEEL SACK, 50 EA/CS	$ 1,970.91	2,804
BALL, VALVE, 1/2IN, BRASS	$ 14.90	5
BALL, VALVE, 3/4IN, BRASS	$ 32.31	7
BAND, HEAD, DRY BROW SWEAT PAD, LARGE, VINYL	$ 45.14	162
BAND, HEAD, HARD HAT SWEAT BAND, ONE SIZE FITS ALL, TERRY CLOTH COTTON, WITH PLASTIC SNAPS	$ 263.31	131
BAND, HEAD, SAFETY VISOR, V5N, 6-1/2IN TO 7-3/4IN ADJUSTABLE, PLASTIC, RATCHET HEADGEAR, W/ THERMOPLASTIC BROWGUARD	$ 15.71	2
BAR, NO TYPE, CROW AND DIGGING, 1-1/8IN WD X 8FT LG, 30#, ROUND	$ 198.78	2
BAR, NO TYPE, CROW, 3/4IN WD X 24IN LG, STEEL, STD PKG/1	$ 17.92	3
BAR, NO TYPE, DRIVE, 1.25IN X 4 FT, STL, 5IN COLLAR	$ 1,715.84	17
BAR, NO TYPE, DRIVE, 1.25IN X 6 FT, STL, 5IN COLLAR	$ 301.09	3
BAR, NO TYPE, SPUD, 69IN LG, CARBON STEEL, W/TAMPING HEAD	$ 81.66	4
BAR, NO TYPE, TAMPING, 9FT LG, WOOD, W/IRON SHOE AND CURVED HEAD	$ 518.98	4
BAR, HEX, 7/8IN, 5FT, 1045 W1 STEEL, POINT END	$ 2,501.84	17
BAR, OCTAGON, 7/8IN, 7FT, STEEL	$ 165.14	1
BAR, POINT, 5FT, STEEL HEAD AND POINT, FIBERGLASS SHAFT	$ 596.88	7
BAR, ROUND, COPPER INSULATED JUMPER-STRAP-OUTBAR	$ 389.40	220

Inventory Provided by Affiliate to Duke Energy Kentucky
For the Year Ended December 31, 2008

COMPANY_SOL CATALOG_DESC	Values Sum of SumOfTRANS_AMT	Sum of SumOfTRANS_QTY
BAR, SHORTING, SLUG, BRASS, BAYONET	$ 581.78	30
BAR, WEDGE, 5FT, STEEL WEDGE AND HEAD FIBERGLASS SHAFT, W/ BALL	$ 75.01	1
BASE, DISCONNECT PLATES	$ 1,536.69	390
BASE, INSULATOR MOUNTING, STEEL, CURVED ANGLE (30 DEGREES)	$ 122.90	9
BASE, METER, TEMPORARY UNDERGROUND, KENTUCKY	$ 1,194.00	3
BASE, METER, TEMPORARY UNDERGROUND, OHIO	$ 15,904.29	40
BASE, POLE, LIGHTING, APPROX 20IN HT X 16.5IN DIA, FIBERGLASS, SLIP ON F/ DIR EMB WASHINGTON STYLE POLE	$ 548.13	2
BASE, POLE, LIGHTING, APPROX 44IN HT X 12IN DIA, FIBERGLASS, SLIP ON, F/ DIR EMB HAMILTON STYLE POLE	$ 1,123.49	4
BATTERY, DRY CELL, ALKALINE, 1.5 VDC, AA, FLAT TERMINALS, STD PKG/1	$ 1,400.93	4,308
BATTERY, DRY CELL, ALKALINE, 1.5 VDC, AAA, FLAT TERMINALS	$ 810.32	2,894
BATTERY, DRY CELL, ALKALINE, 1.5 VDC, C, SNAP TERMINALS, 1 CELL	$ 591.18	1,002
BATTERY, DRY CELL, ALKALINE, 1.5 VDC, D, FLAT TERMINALS	$ 1,556.52	2,485
BATTERY, DRY CELL, ALKALINE, 9 VDC	$ 816.76	638
BATTERY, DRY CELL, CARBON ZINC, 1.5 VDC, C, FLAT TERMINALS	$ 8.20	24
BATTERY, DRY CELL, CARBON ZINC, AA	$ 18.00	72
BATTERY, DRY CELL, LANTERN, 6 VDC, SPRING TERMINALS, 4 CELL	$ 9.23	4
BATTERY, DRY CELL, NON ALKALINE, 1.5 VDC, D, FLAT, 1 CELL HEAVY DUTY	$ 94.59	276
BATTERY, LEAD ACID, 6 VOLT - 1.0 A.H. VDC, RECHARGEABLE - SEALED, 187 SPADE	$ 167.12	20
BATTERY, LITHIUM, 3.6 VDC, SINGLE CELL TCL LITHIUM W/UV RESISTANT PLASTIC	$ 150.00	25
BATTERY, WATCH AND CALCULATOR, 1.55 VDC	$ 25.20	30
BAYONET, STRAIGHT, 2-1/2IN X 2-1/2IN X 1/4IN X 66IN, GALV. STEEL	$ 99.36	3
BEARING, BALL, CONRAD, SINGLE ROW, 1.5748IN ID, 4.3307IN OD, 1.0630IN WD, OPEN, 40BC04 AFBM, 12947 IBI	$ 73.51	1
BEARING, THRUST	$ 267.00	1
BELT, SAFETY, BACK SUPPORT, X-LARGE, CAMBRELLE	$ 11.45	1
BELT, SAFETY, BODY BELT, 8IN CUSHION PAD, 24IN D-RING, DRI LEX LINED, NYLON/LEATHER	$ 511.84	2
BELT, SAFETY, BODY, FULL FLOAT, 8FT' BACK SAVER, DRILEX LINED, NYLON/LEATHER	$	0
BEND, CONDUIT, PANDC, DB-120, 2IN, PVC, 90 DEG, 36IN RAD, BELLED END, STD PKG/1	$ 10.04	2
BEND, CONDUIT, PANDC, DB-60, 4IN, PVC, 90 DEG, 36IN RAD, BELLED END, STD PKG/1	$ 34.51	4
BEND, CONDUIT, SWEEP 90, 1IN, PVC COATED GALVANIZED STEEL, 90 DEG, APROX 8IN RAD	$ 259.00	20
BEVERAGE, GATORADE-GLACIER FREEZE POWDER, 21 OZ PACKAGE, MAKES 2-1/2 GALLONS, 32 PKS PER CASE	$ 266.31	99
BEVERAGE, GATORADE-LEMON-LIME POWDER, 21 OZ PACKAGE, MAKES 2-1/2 GAL	$ 261.05	97
BEVERAGE, GATORADE-ORANGE POWDER, 21 OZ PACKAGE, MAKES 2-1/2 GAL	$ 260.93	97
BIN, BOX, 7IN HT X 8.25IN WD X 14.75IN DP, POLYPROPLYENE, RED	$ 206.64	24
BIN, SHELF, 14-1/16 X 4-3/8 X 4-3/4, POLYPROPLYENE	$ 94.44	12
BIN, SHELF, 2-3/4 X 4 X 11-5/8, POLYPROPLYENE	$ 33.82	24
BIN, SHELF, 4-1/8 X 4 X 11-5/8, POLYPROPLYENE	$ 102.51	66
BIN, SHELF, 4-1/8IN X 4IN X 11-5/8IN, POLYPROPLYENE BLUE	$ 15.48	12
BIN, SHELF, 6-5/8 X 4 X 11-5/8, POLYPROPLYENE	$ 168.30	68
BIN, SHELF, 6-5/8IN X 4IN X 11-5/8IN, POLYPROPLYENE BLUE	$ 49.48	24
BIT, AUGER, 1/2IN DIA X 8IN LG, CARBIDE, 1/4IN SQ, DOUBLE SPUR AND CUTTER, SOLID CENTER, DO NOT SUBSTITUTE	$ 11.01	2
BIT, AUGER, 13/16IN DIA X 18IN LG, HEAT TREATED STL, 7/16IN HEX, SELF FEEDING SCREW, 15IN TWIST SINGLE SPUR, CUTTER AND SIDE LIP,	$ 704.64	24
BIT, AUGER, 9/16IN DIA X 7IN LG, CARBIDE, 1/4IN SQ, DOUBLE SPUR AND CUTTER, SOLID CENTER, DO NOT SUBSTITUTE	$ 40.38	6
BIT, DRIVE SOCKET, 5/16IN HEX, 1/2IN SQ DRV, 3-1/4IN LG	$ 35.12	4
BIT, LOCKHEAD ADJUSTABLE WOOD, 7/8IN TO 3IN, 8-1/8IN OVERALL	$ 18.16	1
BIT, MASONRY, SLOW SPIRAL, 1/4IN DIA, 12IN LG, CARBIDE TIPPED	$ 11.40	4
BIT, ROCK BIT, 1-1/2IN, CARBIDE STEEL, 1IN, 4 CUTTERS, 5 AIR HOLES	$ 141.75	3
BIT, TWIST DRILL, 1/16IN X 118 DEG. POINT, 1-7/8IN LG, 1/16IN SL, HSS, STRAIGHT SHANK HIGH SPEED STEEL	$ 2.06	5
BIT, TWIST DRILL, 1/16IN X 135 DEG. SPLIT POINT, PARABOLIC FLUTE, 1-7/8IN LG, STRAIGHT SL, HSS TITANIUM NITRITE COATED	$ 14.52	6
BIT, TWIST DRILL, 1/2IN X 118 DEG. POINT, 6IN LG, 1/2IN SL, HSS, STRAIGHT SHANK HIGH SPEED STEEL	$ 8.41	2
BIT, TWIST DRILL, 1/4IN X 118 DEG. POINT, 4IN LG, 1/4IN SL, HSS, STRAIGHT SHANK HIGH SPEED STEEL	$ 12.95	14
BIT, TWIST DRILL, 1/4IN, 4IN LG, NOTCHED SL, HSS, PILOT, FOR HOLE SAW/ARBOR	$ 362.78	187
BIT, TWIST DRILL, 1/8IN X 118 DEG. POINT, 2-3/4IN LG, 1/8IN SL, HSS, STRAIGHT SHANK HIGH SPEED STEEL	$ 5.63	13
BIT, TWIST DRILL, 1/8IN X 135 DEG. SPLIT POINT, PARABOLIC FLUTE, 2-3/4IN LG, STRAIGHT SL, HSS TITANIUM NITRITE COATED	$ 22.20	12
BIT, TWIST DRILL, 11/32IN X 118 DEG. POINT, 4-3/4IN LG, 11/32IN SL, HSS, STRAIGHT SHANK HIGH SPEED STEEL	$ 18.50	10
BIT, TWIST DRILL, 11/64IN X 118 DEG. POINT, 3-1/4IN LG, 11/64IN SL, HSS, STRAIGHT SHANK HIGH SPEED STEEL	$ 3.10	5
BIT, TWIST DRILL, 13/64IN X 118 DEG. POINT, 3-5/8IN LG, 13/64IN SL, HSS, STRAIGHT SHANK HIGH SPEED STEEL	$ 3.55	5
BIT, TWIST DRILL, 17/64IN X 118 DEG. POINT, 4-1/8IN LG, 17/64IN SL, HSS, STRAIGHT SHANK HIGH SPEED STEEL	$ 5.50	5

Inventory Provided by Affiliate to Duke Energy Kentucky
For the Year Ended December 31, 2008

COMPANY_SOL CATALOG_DESC	Values Sum of SumOfTRANS_AMT	Sum of SumOfTRANS_QTY
BIT, TWIST DRILL, 3/16IN X 118 DEG. POINT, 3-1/2IN LG, 3/16IN SL, HSS, STRAIGHT SHANK HIGH SPEED STEEL	$ 3.34	5
BIT, TWIST DRILL, 3/32IN X 118 DEG. POINT, 2-1/4IN LG, 3/32IN SL, HSS, STRAIGHT SHANK HIGH SPEED STEEL	$ 1.80	5
BIT, TWIST DRILL, 3/8IN X 135 DEG. SPLIT POINT, PARABOLIC FLUTE, 5IN LG, STRAIGHT SL, HSS TITANIUM NITRITE COATED	$ 49.86	6
BIT, TWIST DRILL, 3/8IN, 7-3/8IN LG, TAPER SL, HSS	$ 184.40	10
BIT, TWIST DRILL, 5/16IN X 118 DEG. POINT, 4-1/2IN LG, 5/16IN SL, HSS, STRAIGHT SHANK HIGH SPEED STEEL	$ 7.32	5
BIT, TWIST DRILL, 5/32IN X 118 DEG. POINT, 3-1/8IN LG, 5/32IN SL, HSS, STRAIGHT SHANK HIGH SPEED STEEL	$ 2.91	5
BIT, TWIST DRILL, 7/64IN X 118 DEG. POINT, 2-5/8IN LG, 7/64IN SL, HSS, STRAIGHT SHANK HIGH SPEED STEEL	$ 2.01	5
BIT, TWIST DRILL, 9/64IN X 118 DEG. POINT, 2-7/8IN LG, 9/64IN SL, HSS, STRAIGHT SHANK HIGH SPEED STEEL	$ 30.22	65
BIT, WOOD, AUGER, 13/16IN DIA X 24IN LG, HEAT TREAT STL, 7/16IN HEX, SELF FEEDING SCREW POINT, 21IN TWIST SINGLE SPUR,	$ 304.68	9
BIT, WOOD, POLE, 9/16IN DIA, HEX SL, TOOL STEEL, WEDGE BLADE TIP, 18IN LG	$ 192.01	8
BIT, WOOD, SHIP-AUGER, 13/16IN DIA, HEAT TREATED STL, SINGLE CUT TIP, 12IN TWIST LG. W/18IN OVERALL LG W/TAPER SQ SHANK	$ 94.31	5
BLADE, CHAMFERING TOOL, 3/4IN L X 5/16IN W, ALUMINUM, 2IN	$ 0.22	2
BLADE, CLASSIFIER, STEEL, F/ MPS 89, PULVERIZER	$ 3,480.00	24
BLADE, ELECTRICAL, DISCONNECT, 15KV, 300A,12KA, COPPER	$ 493.91	22
BLADE, ELECTRICAL, SWITCH REPAIR KIT, 69KV, 1200A, COPPER, TYPE V SINGLE POLE ASSY	$ 2,345.62	30
BLADE, KNIFE, PIPE SCRAPER FWZ, REPLACEMENT BLADES FOR SCRAPER	$ 379.80	34
BLADE, KNIFE, POCKET, REPLACEMENT	$ 252.10	124
BLADE, KNIFE, REPLACEMENT, 3/4IN WD X 2-7/16IN LG X 1/32IN THK, UTILITY-HEAVY DUTY	$ 4.75	5
BLADE, RAZOR, NO.9, SINGLE EDGE	$ 8.89	5
BLADE, SAW, CIRCULAR, 12IN DIA, ALUM. OXIDE, CONCRETE, CUT-OFF MAX. OPER. SPEED 6370 RPM	$ 227.02	54
BLADE, SAW, HAND-HACK, 1/2 IN X 12IN X .025IN THK, 18 TPI, HIGH SPEED MOLYBDENUM, METAL,WOOD,PLASTIC,STRUCTURALS,PIPE, 12IN/300MM	$ 21.35	18
BLADE, SAW, HAND-HACK, 1/2IN WD X 10IN LG X 0.025IN THK, 18 TPI, BI-METAL, METAL,WOOD PLASTIC,STRUCTURALS,TUBING	$ 43.18	36
BLADE, SAW, HAND-HACK, 1/2IN WD X 12IN LG X .025IN THK, 24 TPI, HIGH SPEED MOLYBDENUM, METAL,WOOD,PLASTIC,STRUCTURALS,PIPE, CGE SPEC. 2050T	$ 62.92	94
BLADE, SAW, HAND-HACK, 12IN X 1/2IN X 0.025 THK., 18 TPI, BI-METAL, PIPE,TUBING,WOOD,PLASTIC,STRUCTURAL SHAPE	$ 74.88	52
BLADE, SAW, SAWZALL, 4IN LG, 18 TPI, BI-METAL, METAL CUTTING	$ 28.28	21
BLADE, SAW, SAWZALL, 6IN DIA, 14 TPI, STEEL, HEAVY DUTY METAL	$ 85.07	36
BLADE, SAW, SAWZALL, FAST CUT COMBINATION, 12 X 3/4 X.035, 18 TPI, HIGH SPEED STEEL, ALL PURPOSE	$ 310.48	142
BLADE, SAW, SAWZALL, FAST CUT COMBINATION, 12 X 3/4 X.050, 6 TPI, HIGH SPEED STEEL, ALL PURPOSE	$ 206.34	96
BLADE, SAW, SAWZALL, FAST CUT COMBINATION, 12, 8-12 TPI, HIGH SPEED STEEL, ALL PURPOSE	$ 357.39	126
BLADE, SAW, SAWZALL, FAST CUT COMBINATION, 6 X 3/4 X.050, 8-12 TPI, HJIGH SPEED STEEL, ALL PURPOSE	$ 345.10	184
BLADE, SAW, SAWZALL, FAST CUT COMBINATION, 8 X 3/4 X.050, 8-12 TPI, HJIGH SPEED STEEL, ALL PURPOSE	$ 398.58	220
BLADE, SCISSOR, 1IN WD, STEEL	$ 121.15	21
BLADE, SCRAPER BLADE, CARBON STEEL, REPLACEMENT BLADE FOR 1INCTS SCRAPER	$ 198.00	22
BLADE, TUBING, STEEL, REPLACEMENT FOR SNIPPER	$ 38.06	11
BLOCK, ROPE, HAND LINE, 1/2IN, 1, FORGED STEEL, 1/2 TON, CLOSED HEAD SWIVEL RING SHIELDED BALL BEARING	$ 190.20	2
BLOCK, ROPE, S-HOOK, 5, INSULATED FORGED STEEL, 2 TON, CONSISTS OF ONE - 3 SHEAVE UPPER, AND ONE - 2 SHEAVE LOWER BLOCK W/THIMBLE EYE	$ 280.22	1
BLOCK, ROPE, SNATCH, 4-1/2IN, 1/2IN, 1, FORGED STEEL	$ 1,862.64	6
BLOCK, ROPE, TACKLE, 3/8IN, 2, GALV LIGHT STEEL, 1000#, 25 FT ROPE,SHELL,	$ 1,026.52	14
BLOCK, SPACER, 2IN THK X 6IN WD X 12IN LG, OAK WOOD	$ 2,761.10	3,024
BLOCK, TERMINAL, 200 AMP, #1/0 AWG TO 250 MCM, STRANDED COPPER OR ALUMINUM CONNECTORS	$ 481.41	36
BLOCK, TERMINAL, 200 AMP, HORN BY-PASS	$ 184.40	8
BOARD, PRINTED CIRCUIT, PRECIP CONTROL	$	0
BODY, CONDUIT OUTLET, RIGID, 1IN HUB, E, FERALOY, FEMALE THD.	$ 748.77	130
BOLT, ANCHOR, EXPANSION, 1/2IN DIA, 4-1/4IN LG, ZINC PLATED	$ 106.42	72
BOLT, CARRIAGE, 1/2IN DIA, 7IN LG, HOT DIPPED GALV. STEEL	$ 1,159.46	1,136
BOLT, CARRIAGE, 3/8IN DIA, 16 UNC THD, 1-1/2IN LG, BLACK IRON	$ 9.90	175
BOLT, CARRIAGE, 3/8IN DIA, 16 UNC THD, 8IN LG, HOT DIPPED GALV STEEL	$ 154.85	112
BOLT, CARRIAGE, 3/8IN DIA, 5IN LG, HOT DIPPED GALV STEEL	$ 137.83	254
BOLT, DOUBLE ARMING, 3/4IN DIA, 24IN LG, GALV STEEL, CONE POINT, FULL THD, W/(4) SQ NUTS	$ 78.71	20
BOLT, DOUBLE ARMING, 3/4IN DIA, 26IN LG, GALV STEEL, UNC ROLLED CONE POINT	$ 75.96	18
BOLT, DOUBLE ARMING, 3/4IN DIA, 28IN LG, GALV STEEL, CONE POINT	$ 106.36	23
BOLT, DOUBLE ARMING, 3/4IN DIA, 30IN LG, GALV STEEL, UNC ROLLED CONE POINT, W/ 4 SQ NUTS	$ 70.53	13
BOLT, DOUBLE ARMING, 5/8IN DIA, 28IN LG, GALV STEEL, CONE PT, UNC-ROLLED	$ 398.64	130
BOLT, DOUBLE ARMING, 5/8IN DIA, 18IN LG, GALV STEEL, CONE POINT, FULL THD	$ 98.60	49
BOLT, DOUBLE ARMING, 5/8IN DIA, 20IN LG, GALV STEEL, CONE POINT, FULL THD	$ 267.55	135
BOLT, DOUBLE ARMING, 5/8IN DIA, 22IN LG, GALV STEEL, CONE PT, FULL THD. UNC-ROLLED	$ 319.20	150
BOLT, DOUBLE ARMING, 5/8IN DIA, 24IN LG, GALV STEEL, CONE POINT, FULL THD	$ 140.39	50

Inventory Provided by Affiliate to Duke Energy Kentucky
For the Year Ended December 31, 2008

COMPANY_SOL	CATALOG_DESC	Values Sum of SumOfTRANS_AMT	Sum of SumOfTRANS_QTY
	BOLT, DRESSER COUPLING, 5/8IN DIA, 11 UNC THD, 7IN LG, BUTTON, ALLOY STEEL, ASTM A307, A GR	$ 28.48	8
	BOLT, MACHINE, 1/2IN DIA, 13 UNC TAPERED THD, 1-1/2IN LG, SILICON BRONZE, PENTA, 25 EA/BX	$ 7,238.50	225
	BOLT, MACHINE, 1/2IN DIA, 13 UNC THD, 1-1/2IN LG, GALV STEEL, HEX, ASTM A325, W/HEX NUT 50EA/BX	$ 9.06	30
	BOLT, MACHINE, 1/2IN DIA, 2IN LG, GALV STEEL, HEX, 2 GR, W/HEX NUTS	$ 94.63	230
	BOLT, MACHINE, 3/4IN DIA, 10 THD, 3-1/2IN LG, CARBON STEEL, HEX, ANSI B18.2.1,B1.1 CLASS 2A, ASTM A-307, B GR	$ 63.56	40
	BOLT, MACHINE, 3/4IN DIA, 10 THD, 3-3/4IN LG, CARBON STEEL, HEX HEAD, ASTM A-307, B GR, W/ NUT, STD PKG - 50 PER/PK	$ 110.16	80
	BOLT, MACHINE, 3/4IN DIA, 10 UNC THD, 2IN LG, GALV STEEL, SQUARE, W/SQ NUT	$ 16.25	10
	BOLT, MACHINE, 3/4IN DIA, 2-1/2IN LG, GALV, HEX, 5 GR, W/NUT	$ 6.82	5
	BOLT, MACHINE, 3/4IN DIA, UNC ROLLED THD, 10IN LG, GALV STEEL, SQUARE, CONE POINT, 4IN THD LG MINIMUM, W/SQ NUT	$ 91.96	53
	BOLT, MACHINE, 3/4IN DIA, UNC ROLLED THD, 14IN LG, GALV STEEL, SQUARE, CONE POINT,6IN THD LG MINIMUM,W/SQ NUT	$ 729.11	370
	BOLT, MACHINE, 3/4IN DIA, UNC ROLLED THD, 16IN LG, GALV STEEL, SQUARE	$ 654.33	322
	BOLT, MACHINE, 3/4IN DIA, UNC ROLLED THD, 18IN LG, GALV STEEL, SQUARE, CONE POINT,6IN THD LG MINIMUM,W/SQ NUT	$ 321.31	127
	BOLT, MACHINE, 3/4IN DIA, UNC ROLLED THD, 26IN LG, GALV STEEL, SQUARE, CONE POINT, 6IN THD LG MINIMUM, W/SQ NUT	$ 116.80	25
	BOLT, MACHINE, 3/4IN DIA, UNC ROLLED THD, 28IN LG, GALV STEEL, SQUARE, CONE POINT,6IN THD LG MINIMUM,W/SQ NUT	$ 141.00	25
	BOLT, MACHINE, 3/4IN DIA, UNC THD, 12IN LG, GALV STEEL, SQUARE, CONE POINT,4IN THD LG MINIMUM,W/SQ NUT	$ 1,109.46	686
	BOLT, MACHINE, 3/4IN DIA, UNC THD, 20IN LG, GALV STEEL, SQUARE, CONE POINT,6IN THD LG MINIMUM,W/SQ NUT	$ 544.44	200
	BOLT, MACHINE, 3/4IN DIA, UNC THD, 22IN LG, GALV STEEL, SQUARE, CONE POINT,6IN THD LG MINIMUM,W/SQ NUT	$ 157.04	52
	BOLT, MACHINE, 3/4IN DIA, UNC THD, 24IN LG, GALV STEEL, SQUARE, CONE POINT, 6IN THD LG MINIMUM, W/SQ NUT	$ 240.50	68
	BOLT, MACHINE, 3/8IN DIA, 16 TPI THD, 1-1/4IN LG, SILICON BRONZE, PENTA, 5-SIDED HEAD, WASHER HEAD, 25 EA/BX	$ 1,920.37	276
	BOLT, MACHINE, 3/8IN DIA, 4IN LG, HOT DIPPED GALV STEEL, SQUARE, W/SQUARE NUT, MIN. TENSILE STRENGTH = 4650 LBS,	$ 47.79	95
	BOLT, MACHINE, 3/8IN DIA, 5IN LG, HOT DIPPED GALV STEEL, SQUARE, W/SQUARE NUT	$ 156.92	273
	BOLT, MACHINE, 5/8IN DIA, 11 UNC THD, 1-3/4IN LG, GALV STEEL, HEX, ASTM A325, W/HEX NUT	$ 24.65	25
	BOLT, MACHINE, 5/8IN DIA, 11 UNC THD, 2-1/2IN LG, CARBON STEEL, HEX, ASTM A307, B GR, W/NUT	$ 37.67	45
	BOLT, MACHINE, 5/8IN DIA, 11 UNC THD, 2IN LG, CADMIUM PLATED STEEL, HEX, 2 GR	$ 25.34	64
	BOLT, MACHINE, 5/8IN DIA, 11 UNC THD, 2IN LG, GALV STEEL, SQUARE, B GR, W/ NUT	$ 53.26	75
	BOLT, MACHINE, 5/8IN DIA, 11 UNC THD, 3-1/4IN LG, CARBON STEEL, HEX, ASTM A307, B GR, W/HVY NUT	$ 91.65	117
	BOLT, MACHINE, 5/8IN DIA, 11 UNC THD, 3IN LG, CARBON STEEL, HEX, B GR, W/NUT	$ 109.87	136
	BOLT, MACHINE, 5/8IN DIA, 11 UNC THD, 3IN LG, GALV STEEL, SQUARE, W/ NUT	$ 1.43	2
	BOLT, MACHINE, 5/8IN DIA, 3IN THD, 4IN LG, GALV, SQ	$ 20.71	25
	BOLT, MACHINE, 5/8IN DIA, 6IN LG, STEEL, SQUARE, HOT DIP GALVANIZED, W/SQUARE NUT	$ 57.38	77
	BOLT, MACHINE, 5/8IN DIA, UNC ROLLED THD, 16IN LG, GALV STEEL, SQUARE, CONE POINT,6IN THD LG MINIMUM,W/SQ NUT	$ 569.18	455
	BOLT, MACHINE, 5/8IN DIA, UNC ROLLED THD, 20IN LG, GALV STEEL, SQUARE	$ 196.76	103
	BOLT, MACHINE, 5/8IN DIA, UNC ROLLED THD, 24IN LG, GALV STEEL, SQUARE	$ 67.50	25
	BOLT, MACHINE, 5/8IN DIA, UNC ROLLED THD, 8IN LG, GALV STEEL, SQUARE, CONE POINT,4IN THD LG MINIMUM,W/SQ NUT	$ 105.64	122
	BOLT, MACHINE, 5/8IN DIA, UNC THD, 10IN LG, GALV STEEL, SQUARE, CONE POINT,4IN THD LG MINIMUM,W/SQ NUT	$ 1,628.79	1,868
	BOLT, MACHINE, 5/8IN DIA, UNC THD, 12IN LG, GALV STEEL, SQUARE, CONE POINT,4IN THD LG MINIMUM,W/SQ NUT	$ 2,892.39	3,400
	BOLT, MACHINE, 5/8IN DIA, UNC THD, 14IN LG, GALV STEEL, SQUARE, CONE POINT,6IN THD LG MINIMUM,W/SQ NUT	$ 1,063.56	997
	BOLT, MACHINE, 5/8IN DIA, UNC THD, 18IN LG, GALV STEEL, SQUARE, CONE POINT,6IN THD LG MINIMUM,W/SQ NUT	$ 224.67	151
	BOLT, MACHINE, 5/8IN DIA, UNC THD, 22IN LG, GALV STEEL, SQUARE, CONE POINT, 6IN THD LG MINIMUM, W/SQ NUT	$ 52.75	25
	BOLT, MACHINE, 7/8IN DIA, 9 THD, 4 LG, CARBON STEEL, HEX, ANSI B18.2.1, ANSI B1.1, ASTM A-307, B GR, W/HEX NUT,	$ 80.67	60
	BOOK, LOG, PRE TRIP INSPECTION, 5-1/2IN X 9IN, 35 SETS PER/BOOK, 2 PART NCR FORM	$ 772.20	156
	BOOT, PEDESTAL COVER, 750 KCM, PLASTIC, INSULATING, 6 HOLE	$ 75.84	20
	BOOT, PEDESTAL, 500 KCM, PVC	$ 538.32	309
	BOOTS, BUCKLE, 14IN HT, SIZE 15, RUBBER, BLACK, HEAVYWEIGHT	$ 78.42	4
	BOOTS, HEAVY DUTY PULL ON, 15IN HT, 12, RUBBER, BROWN	$ 13.45	1
	BOOTS, HEAVY DUTY PULL ON, KNEE HT, 10, RUBBER, BROWN, 15IN HT	$ 13.91	1
	BOOTS, LEGGING, 11, BLACK, 14IN BUCKLE, PULL ON HEAVY WEIGHT, 5 BUCKLE	$ 21.78	1
	BOOTS, LINEMANS SUPER DI-ELECTRIC, 15, 4-1/2IN, 20KV TEST, DEEP HEEL	$ 29.00	1
	BOOTS, OVER THE SHOE, 5 BUCKLE, 14IN HT, SIZE 13, RUBBER, BLACK, HEAVYWEIGHT, 5 BUCKLE	$ 60.48	3
	BOOTS, OVER THE SHOE, 5 BUCKLE, 14IN HT, SIZE 14, RUBBER, BLACK, HEAVYWEIGHT	$ 89.62	5
	BOOTS, STEEL CAP SAFETY TOE, KNEE HT, SIZE 10, RUBBER, BLACK, GENERAL PURPOSE	$ 16.96	2
	BOOTS, STEEL CAP SAFETY TOE, KNEE HT, SIZE 9, PVC, BLACK, GENERAL PURPOSE	$ 9.07	1
	BOOTS, SUPER DIELECTRIC LINEMAN, 15, RUBBER, 2 BUCKLE	$ 106.00	3
	BOOTS, SUPER DIELECTRIC LINEMAN, 2 BUCKLE, HIGH TOP HT, SIZE 10, RUBBER, BLACK AND YELLOW, DEEP HEEL, 20 KV, POLE CLIMBING REINFORCEMENT	$ 72.68	2
	BOOTS, SUPER DIELECTRIC LINEMAN, 2 BUCKLE, HIGH TOP HT, SIZE 11, RUBBER, BLACK AND YELLOW, DEEP HEEL, 20 KV, POLE CLIMBING REINFORCEMENT	$ 156.40	4
	BOOTS, SUPER DIELECTRIC LINEMAN, 2 BUCKLE, HIGH TOP HT, SIZE 12, RUBBER, BLACK AND YELLOW, DEEP HEEL, 20 KV, POLE CLIMBING REINFORCEMENT	$ 357.15	10
	BOOTS, SUPER DIELECTRIC LINEMAN, 2 BUCKLE, HIGH TOP HT, SIZE 13, RUBBER, BLACK AND YELLOW, DEEP HEEL, 20 KV, POLE CLIMBING REINFORCEMENT	$ 154.98	4

Inventory Provided by Affiliate to Duke Energy Kentucky
For the Year Ended December 31, 2008

COMPANY_SOL CATALOG_DESC	Values Sum of SumOfTRANS_AMT	Sum of SumOfTRANS_QTY
BOOTS, SUPER DIELECTRIC LINEMAN, 2 BUCKLE, HIGH TOP HT, SIZE 14, RUBBER, BLACK AND YELLOW, DEEP HEEL, 20 KV, POLE CLIMBING REINFORCEMENT	$ 114.69	3
BOOTS, SUPER DIELECTRIC LINEMAN, 2 BUCKLE, HIGH TOP HT, SIZE 9, RUBBER, BLACK AND YELLOW, DEEP HEEL, 20 KV, POLE CLIMBING REINFORCEMENT	$ 70.70	2
BOOTS, SUPER DIELECTRIC LINEMAN, 4 BUCKLE, 11IN HT, SIZE 12, RUBBER, BLACK AND YELLOW, 20 KV, FLAT HEEL	$ 88.15	2
BOOTS, SUPER DIELECTRIC LINEMAN, 4 BUCKLE, 11IN HT, SIZE 13, RUBBER, BLACK AND YELLOW, 20 KV, FLAT HEEL	$ 112.08	2
BOOTS, SUPER DIELECTRIC LINEMAN, 4 BUCKLE, 11IN HT, SIZE 14, RUBBER, BLACK AND YELLOW, 20 KV, FLAT HEEL	$ 43.68	1
BOOTS, SUPER DIELECTRIC LINEMAN, SLIP-ON, 4-1/2IN CLOSURE HT, SIZE 11, RUBBER, BLACK AND YELLOW, FLAT HEEL, 20 KV	$ 126.00	4
BOOTS, SUPER DIELECTRIC LINEMAN, SLIP-ON, 4-1/2IN CLOSURE HT, SIZE 11-1/2, RUBBER, BLACK AND YELLOW, FLAT HEEL, 20 KV	$ 34.89	1
BOOTS, SUPER DIELECTRIC LINEMAN, SLIP-ON, 4-1/2IN CLOSURE HT, SIZE 12, RUBBER, BLACK AND YELLOW, FLAT HEEL, 20 KV	$ 181.98	5
BOOTS, SUPER DIELECTRIC LINEMAN, SLIP-ON, 4-1/2IN HT, SIZE 10, RUBBER, BLACK AND YELLOW, FLAT HEEL, 20 KV	$ 76.72	2
BOOTS, SUPER DIELECTRIC LINEMAN, SLIP-ON, 4-1/2IN HT, SIZE 12, RUBBER, BLACK AND YELLOW, DEEP HEEL, 20KV	$ 29.54	1
BOOTS, SUPER DIELECTRIC LINEMAN, SLIP-ON, 4-1/2IN HT, SIZE 13, RUBBER, BLACK AND YELLOW, DEEP HEEL, 20KV	$ 73.89	2
BOOTS, SUPER DIELECTRIC LINEMAN, SLIP-ON, 4-1/2IN HT, SIZE 13, RUBBER, BLACK AND YELLOW, FLAT HEEL, 20 KV	$ 77.25	2
BOOTS, SUPER DIELECTRIC LINEMAN, SLIP-ON, 4-1/2IN HT, SIZE 14, RUBBER, BLACK AND YELLOW, DEEP HEEL, 20KV	$ 39.17	1
BOOTS, SUPER DIELECTRIC LINEMAN, SLIP-ON, 4-1/2IN HT, SIZE 8, RUBBER, BLACK AND YELLOW, DEEP HEEL, 20KV	$ 29.97	1
BOOTS, SUPER DIELECTRIC LINEMAN, SLIP-ON, 4-1/2IN HT, SIZE 9, RUBBER, BLACK AND YELLOW, DEEP HEEL, 20KV	$ -	0
BOOTS, SUPER DIELECTRIC LINEMAN, SLIP-ON, 4-1/2IN HT, SIZE 9, RUBBER, BLACK AND YELLOW, FLAT HEEL, 20 KV	$ 37.40	1
BOOTS, SUPER DIELECTRIC LINEMAN,4 BUCKLE, 11IN HT, SIZE 17, RUBBER, BLACK AND YELLOW, 20KV, FLAT HEEL	$ 42.35	1
BOTTLE, NON-LABELED, 1/2 GAL, PLASTIC	$ 115.41	39
BOTTLE, RECTANGULAR, 1 GAL, POLYETHYLENE	$ 23.22	11
BOX, CATHODIC TERMINAL, 18IN LG, PLASTIC	$ 2,723.74	291
BOX, CURB, 16-1/4IN LG, PLASTIC, TOP SECTION	$ 7,917.27	765
BOX, CURB, 4IN DIA, PLASTIC, BOTTOM SECTION	$ 3,283.69	517
BOX, TOOL, 7IN WD X 16IN LG X 7-1/2IN DP, STEEL, STD PKG/1	$ 19.15	1
BOX, TRACER WIRE, 14IN LG, PLASTIC, W/LID, INDENT PRINT ON LID TO READ:	$ 785.03	101
BOX, VALVE, 12-1/2IN WD X 15-1/2IN DP, CAST IRON	$ 9,276.22	60
BOX, VALVE, 12IN FULL PORT, POLYETHYLENE, CI LID+5.25IN SLIDING SHAFT(28-36IN)+107 BASE	$ 47.72	1
BOX, VALVE, 12IN X 20IN, POLYETHYLENE BOX STEEL LID, WITH 2IN SPACER	$ 2,529.64	23
BOX, VALVE, 15-1/2IN LG, CAST IRON	$ 5,482.20	174
BOX, VALVE, 2IN TO 4IN FULL PORT 2IN TO 6IN REDUCED PORT, POLYETHYLENE, 34IN TO 54IN EXTENSION	$ 1,627.28	52
BOX, VALVE, 6IN DIA, POLYETHYLENE, 2-3-4 REDUCED PORTVALVES	$ 623.35	13
BOX, VALVE, 6IN FULL PORT, POLYETHYLENE, ADJ 29IN-42IN HIGH	$ 347.60	5
BOX, VALVE, 8IN FULL PORT, POLYETHYLENE, ADJ. 29IN - 42IN NO SUPPORT NEEDED	$ 197.50	5
BRACE, CROSSARM, 84IN SPAN, 42IN DROP, DOUGLAS FIR, #564-S-1,WITH GALV. STEEL END FITTINGS	$ 508.50	15
BRACE, POLE, CROSSARM, 1-15/16IN X 2-15/16IN X-SECTION X 60IN SPACING, WOOD, W/METAL END FITTINGS	$ 2,544.38	152
BRACE, POLE, CROSSARM, 13/16IN X 2-1/4IN CROSS SECTION X 38IN SPAN, WOOD, 28IN L X 7FT ARM, 18IN DROP	$ 447.60	65
BRACE, POLE, CROSSARM, 1-3/4IN X 1-3/4IN, 48IN SPAN, 18IN DROP, APITONG OR DOUGLAS FIR, 6# PENTA TREATED	$ 4,579.40	369
BRACE, POLE, CROSSARM, 1-3/4IN X 1-3/4IN, 60IN SPAN, 18IN DROP, APITONG OR DOUGLAS FIR, 6# PENTA TREATED, HOLE SIZE 9/16IN @ ARM,, 11/16IN @	$ 2,073.71	160
BRACE, POLE, CROSSARM, 7FT LG. WOOD, ALLEY ARM	$ 1,213.64	28
BRACKET, ARRESTER LIGHTING, 3/8IN THK X 1-3/4IN WD X 8-1/8IN HT, GALV STL, 2-1/4IN OUT, TYPE B-L BRACKET	$ 754.31	91
BRACKET, ARRESTER TRANSFORMER TANK, 4IN WD X 10-1/2IN LG, GALV STEEL, MOUNTING TYPE N, (2) 9/16IN X 2-1/4IN	$ 125.54	24
BRACKET, CROSSARM MOUNTING, 3/8IN THICK ANGLE PIECE. W/HEX NUTS	$ 17,853.96	1,776
BRACKET, EQUIPMENT MOUNTING, 1-1/2IN DIA ROD X 48IN LG, FIBERGLASS, (3) POSITION, 25IN CENTER ROD,W/3 HOLE END CAPS	$ 5,730.45	65
BRACKET, EQUIPMENT MOUNTING, 1-1/2IN DIA X 18IN LG, FIBERGLASS	$ 10,480.40	418
BRACKET, EQUIPMENT MOUNTING, 2IN, STEEL, GALV, LIGHTNING ARRESTER, RECLOSER	$ 144.34	26
BRACKET, EQUIPMENT MOUNTING, ALUM, (3) POSITION	$ 1,943.68	12
BRACKET, FOUNDATION, 9IN OFFSET, STEEL, 1.28IN-2.5IN DIA. RANGE	$ 318.88	43
BRACKET, FOUNDATION-GAS SERVICE, 6IN OFFSET, STEEL EPOXY COATED W/HARDWARE, FOR 1IN CTS RISER	$ 4,734.07	872
BRACKET, FRAMING FITTING, CONDUATOR, ANGLE, 19-1/8IN LG X 17-1/4IN HT, 13/16IN, GALV STEEL, 15KV SPACED CONDUCTOR	$ (227.66)	-5
BRACKET, FREE STANDING METER SUPPORT, 5FT, STEEL EPOXY COATED W/HARDWARE, FOR 1IN CTS RISER	$ 774.04	37
BRACKET, GAS SERVICE FOUNDATION, 12IN OFFSET, STEEL EPOXY COATED W/HARDWARE, 2IN IPS SERVICE RISER, 1.95IN-3.5IN DIA RANGE	$ 126.41	15
BRACKET, LIGHTNING ARRESTER MOUNTING, 3/8" X 18", GALVANIZED STEEL, MOUNTING BOLTS INCLUDED	$ 2,581.32	65
BRACKET, MAST ARM STYLE, 18IN LONG, 1 1/4IN DIA., ALUM., USE ON WOOD POLE WITH COBRAHEAD LIGHT	$ 150.82	13
BRACKET, MOUNTING METER BASE, STEEL, CAPACITOR, 4 PCS /HANGER, W 5/16IN SCREWS	$ 120.00	10
BRACKET, MOUNTING, STEEL, TIME CONTROL, W/(3) PRONG TWIST-LOCK RECEPTABLE, & WOOD POLE OR CROSSARM MOUNTING	$ 16.06	2
BRACKET, POLE MOUNTING, 9IN X 6IN, GALV STEEL, ANGLE L 3/8IN THK X 2IN WD	$ 38.50	7
BRACKET, POLE TOP MOUNTING, 10-5/8IN LG, STEEL, 5IN BETWEEN HOLES	$ 409.68	42
BRACKET, POLE TOP MOUNTING, 13-1/8IN LG, STEEL	$ 4,598.28	452

Inventory Provided by Affiliate to Duke Energy Kentucky
For the Year Ended December 31, 2008

COMPANY_SOL CATALOG_DESC	Values Sum of SumOfTRANS_AMT	Sum of SumOfTRANS_QTY
BRACKET, POTHEAD MOUNTING, GALV STEEL	$ 15.39	2
BRACKET, RECLOSER CLUSTER MOUNTING, 36IN LG, GALV STEEL, 10IN EXTENSION	$ 195.00	1
BRACKET, TRANSFORMER CLUSTER MOUNTING, 1000#/POSITIION (UP TO 50KVA), TRANSFORMER (3), OR RECLOSER (3)	$ 4,296.52	37
BRACKET, TRANSFORMER CLUSTER MOUNTING, 3KVA-50KVA, STEEL, TRANSFORMER(2) OR RECLOSER(2), 1000I# STD	$ 145.33	4
BRACKET, TRANSFORMER, 2IN WD, GALV STEEL, SECONDARY W/SPOOL INSULATOR	$ 25.35	3
BRACKET, TRANSFORMER, 8-1/4IN LG, ALUM, THREE TRANSFORMERS OR RECLOSERS	$ 1,152.27	6
BRACKET, UNIVERSAL POTHEAD MOUNTING, 6-1/2 HIGH X 7IN WIDE X 3IN DEEP, STEEL, COMPLETE W/ ONE 2/0 SPLIT BOLT CONNECTOR	$ 60.00	3
BROOM, HOUSE, 5 STRING, NO.1	$ 52.45	9
BROOM, REGULAR WHISK, NO-10	$ 74.17	20
BROOM, STREET (BASS), 16IN WD, 5-1/4IN, POLY, W/ 1-1/8X60 WOOD TAPERED END HANDLE	$ 134.67	11
BROOM, WAREHOUSE, 18IN, STRAW, 4 SEAM STEEL BANDED	$ 79.95	10
BRUSH, BOTTLE, 2IN DIA X 5IN LG X 15IN OA LG, PLASTIC, TWISTED WIRE HANDLE, STD PKG/1	$ 7.83	2
BRUSH, CLEANING, 1IN DIA, FIBER, ROUND	$ 604.24	83
BRUSH, CLEANING, PURE BRISTLE, ROUND HANDLE	$ 492.00	120
BRUSH, DUST, 8IN, BLACK SYNTHETIC, WOOD	$ 21.92	8
BRUSH, ELECTRICAL SET, GENERATOR, 1-1/4IN X 2-3/4IN X 3/4IN, CARBON, 1, PIGTAIL, 21-8 8-81	$ 1,060.00	80
BRUSH, PAINT, ANGLE SASH, 1IN, PLASTIC, CHISELED TIP	$ 60.84	26
BRUSH, PAINT, CHIP, 2INWD X 1-3/4IN LG X 5/16IN THK, WHITE CHINA BRISTLE, WOOD, FLAT, DISPOSABLE	$ 109.60	80
BRUSH, PAINT, ECONOMY CHIP, 3IN WD, NATURAL BRISTLES, WOOD, FLAT, 5/16IN THK	$ 13.40	20
BRUSH, PAINT, THIN ANGLE SASH, 2IN, PLASTIC, CHISELED TIP	$ 37.28	28
BRUSH, PAINT, UTILITY, 1-1/2IN WD X 2-1/4IN LG, NYLON, PLASTIC, FLAT	$ 6.14	12
BRUSH, PAINT, WALL, 3IN WD, NYLON, TAPERED, FLAT	$ 88.80	36
BRUSH, PAINT, WALL, 4IN, NYLON, WOOD HANDLE, ECONOMY	$ 51.62	58
BRUSH, WIRE, CASTING, 3IN X 19IN, STEEL WIRE, CURVED WOOD, STD PKG/12	$ 42.60	30
BRUSH, WIRE, CONDUCTOR CLEANING, STEEL, W/HANDLE	$ 197.01	7
BRUSH, WIRE, TUBE, 1-1/2IN LG, 3/4IN DIA, NO.52 STEEL SPRING, METAL	$ 45.36	6
BRUSH, WIRE, TUBE, 1-3/4IN LG, 1IN DIA, NO 61 SPRING STEEL, METAL	$ 10.40	4
BRUSH, WIRE, TUBE, 1IN LG, 1-19/64IN DIA, WIRE, .0104 CRIMPED WIRE	$ 10.58	3
BUCKET, SOAP, 5IN, ALUM, W/HANDLE AND REMOVEABLE THROAT, HIGH SOAP SOLUTION	$ 640.68	44
BUCKET, SPLICERS TOOL, OVAL,14 OUTSIDE POCKETS, CANVAS	$ 267.80	6
BUCKET, WATER, 14 QT, RUBBER, GREY, ROUND	$ 87.68	8
BULB, XEONO, 3V 300MA, KRYPTON, T1, BI-PIN	$ 11.12	4
BUSHING, ELECTRICAL CONDUCTOR, TRANSFORMER, 15KV, 200A, LOADBREAK, INSERT, W/FAULT CLOSE RATING	$ 4,410.04	203
BUSHING, PIPE, HEX, 1/2IN X 1/4IN, THD, BLACK MALLEABLE IRON, 150 LB, BU-001-51	$ 51.14	66
BUSHING, PIPE, HEX, 1/2IN X 3/8IN, THD, BLACK MALLEABLE IRON, 150, BU-001-51	$ 15.85	18
BUSHING, PIPE, HEX, 1/4IN X 1/8IN, MALE X FEMALE, CAST/MALLEABLE IRON, CLASS 150, BU-001-51, OUTSIDE HEX	$ 46.24	42
BUSHING, PIPE, HEX, 1-1/2IN X 1-1/4IN, THD, BLACK MALLEABLE IRON, 150 LB, BU-001-51	$ 74.04	39
BUSHING, PIPE, HEX, 1-1/2IN X 1IN, THD, CAST IRON, 125 PER ASTM, BU-001-51	$ 26.70	16
BUSHING, PIPE, HEX, 1-1/2IN X 3/4IN, THD, CAST IRON, 125 PER ASTM, BU-001-51	$ 21.50	14
BUSHING, PIPE, HEX, 1-1/4IN X 1/2IN, THD, BLACK MALLEABLE IRON, 150 LB, BU-001-51	$ 5.76	4
BUSHING, PIPE, HEX, 1-1/4IN X 1IN, THD, BLACK MALLEABLE IRON, 150 LB, BU-001-51	$ 55.62	37
BUSHING, PIPE, HEX, 1-1/4IN X 3/4IN, THD, BLACK MALLEABLE IRON, 150 LB, BU-001-51	$ 15.10	10
BUSHING, PIPE, HEX, 1IN X 1/2IN, THD, BLACK MALLEABLE IRON, 150 LB, BU-001-51	$ 68.15	60
BUSHING, PIPE, HEX, 1IN X 3/4IN, THD, BLACK MALLEABLE IRON, 150 LB, BU-001-51	$ 67.28	58
BUSHING, PIPE, HEX, 1IN X 3/4IN, THD, FORGED STEEL, BU-002-51, EXTRA HEAVY	$ 1.38	1
BUSHING, PIPE, HEX, 2-1/2IN X 2IN, THD, BLACK MALLEABLE IRON, 150 LB, BU-001-51	$ 10.49	3
BUSHING, PIPE, HEX, 2IN X 1/2IN, MALE X FEMALE, CAST IRON, CLASS 125, BU-001-51, INSIDE HEX	$ 2.67	1
BUSHING, PIPE, HEX, 2IN X 1-1/2IN, THD, CAST IRON, 125 PER ASTM, BU-001-51	$ 94.38	39
BUSHING, PIPE, HEX, 2IN X 1-1/4IN, MALE X FEMALE, CAST IRON, CLASS 125 PER ASTM, BU-001-51, OUTSIDE HEX	$ 28.30	14
BUSHING, PIPE, HEX, 2IN X 1IN, THD, CAST IRON, 125 PER ASTM	$ 13.90	7
BUSHING, PIPE, HEX, 3/4IN X 1/2IN, THD, BLACK MALLEABLE IRON, 150 LB, BU-001-51	$ 37.90	37
BUSHING, PIPE, HEX, 3/4IN X 1/2IN, THD, FORGED STEEL, BU-002-51, EXTRA HEAVY	$ 1.82	2
BUSHING, PIPE, HEX, 3/4IN X 1/4IN, THD, BLACK MALLEABLE IRON, 150 LB, BU-001-51	$ 81.19	85
BUSHING, PIPE, HEX, 3/4IN X 3/8IN, MALE X FEMALE, CAST/MALLEABLE IRON, CLASS 150, BU -001-51, OUTSIDE HEX	$ 9.51	12
BUSHING, PIPE, HEX, 3/8IN 1/4IN, MALE X FEMALE, MALLEABLE IRON, CLASS 150, OUTSIDE HEX	$ 6.92	36
BUSHING, PIPE, HEX, 3IN X 2-1/2IN, MALE X FEMALE, CAST/MALLEABLE IRON, CLASS 150, BU-001-51, OUTSIDE HEX	$ 35.70	8
BUSHING, PIPE, HEX, 3IN X 2IN, THD, BLACK MALLEABLE IRON, 150 LB, BU-001-51	$ 21.52	6

Inventory Provided by Affiliate to Duke Energy Kentucky
For the Year Ended December 31, 2008

COMPANY_SOL	CATALOG_DESC	Values Sum of SumOfTRANS_AMT	Sum of SumOfTRANS_QTY
	CABLE, ELECTRICAL, DUPLEX, 600V, (2) 6 AWG, AA/AAAC, (1) POLYETHYLENE, (1) BARE INS, ALL ALUM AND ALL ALUM ALLOY 6201., 0.067 LB/FT, 14.95 F	$ 260.77	1,500
	CABLE, ELECTRICAL, NETWORK SERVICES, 600V, 500 KCMIL, CLASS B NON-COMPACT STRANDED COATED, 1/O - COATED STRANDS	$ 26,486.70	3,030
	CABLE, ELECTRICAL, POWER, 15KV, 1/0 SOLID, ALUMINUM, W/ 8MIL LC SHIELD, 175 MIL TRXLPE INS, INS JCT, 3-1/C. PER CURRENT DUKE SPEC CS-21	$ 94,886.14	70,135
	CABLE, ELECTRICAL, POWER, 15KV, 1/0 SOLID, ALUMINUM, WITH 8MIL LC SHIELD, 175 MIL TRXLPE INS, INSULATING JACKET, PER CURRENT DUKE SPEC CS-21	$ 33,861.69	25,692
	CABLE, ELECTRICAL, POWER, 15KV, 4/0 AWG WITH 1/2 NEUTRAL, ALUMNIUM WITH COPPER NEUTRAL, CLASS B COMPRESSED INS, EXTRUDED DIELECTRIC	$ 24,750.07	8,828
	CABLE, ELECTRICAL, RAVEN, 1/0 AWG, ACSR, BARE INS, 0.398IN DIA 0.732IN DIA OVER ARMOR ROD, RIGHT HAND LAY	$ 20,340.35	14,217
	CAN, SAFETY, 1 GAL, STEEL, WITH FLEXIBLE SPOUT	$ 105.93	2
	CAN, SAFETY, 5 GAL, STEEL, WITH FLEXIBLE SPOUT	$ 24.88	1
	CANISTER, CHARCOAL, 3-5/8IN DIA X 4-1/4IN DIA X 5-1/4IN LG, PLASTIC	$ 76.38	6
	CANISTER, RUBBER BLANKET, 9IN DIA X 37IN LG, POLYETHYLENE	$ 119.70	2
	CANT HOOK, STEEL, 49IN LG, OAK, SMALL, 2-1/4 INCH X 4 FT. SINGLE POINT.CG&E SPEC.1911-1HOOK	$ 79.96	1
	CANT HOOK, STEEL, 60IN LG, OAK	$ 405.15	3
	CAP, PIPE, 1/2IN, NPT, BLACK MALLEABLE IRON, 150 LB, CA00151	$ 53.44	87
	CAP, PIPE, 1/2IN, NPT, STEEL, 3000 LB, ASTM A105, B16 GR	$ 12.13	10
	CAP, PIPE, 1/4IN, THD, BLACK MALLEABLE IRON, 150 LB LB, CA00151	$ 8.99	12
	CAP, PIPE, 1/8IN, NPT, STEEL, 3000 LB	$ 5.26	5
	CAP, PIPE, 1-1/2IN, NPT, STEEL, 3000 LB, SCH 80	$ 20.87	5
	CAP, PIPE, 1-1/2IN, THD, BLACK MALLEABLE IRON, 150 LB LB, CA00151	$ 123.84	94
	CAP, PIPE, 1-1/4IN, BUTT FUSION, POLYETHYLENE, 88 LB, ASTM 2513, SDR 10 GR, PE2406, YELLOW CSA	$ 110.92	94
	CAP, PIPE, 1-1/4IN, NPT, STEEL, 3000 LB, SCH 80	$ 15.81	5
	CAP, PIPE, 1-1/4IN, THD, BLACK MALLEABLE IRON, 150 LB, CA00151	$ 45.22	35
	CAP, PIPE, 12IN, BUTT FUSION, POLYETHYLENE, 64 LB, PE2406, SDR 13.5 GR	$ 1,743.80	7
	CAP, PIPE, 12IN, MECHANICAL JOINT, CAST IRON, 250 LB, ANSI/AWWA C153/A21.53IN, W/NITRILE GASKET	$ 212.84	2
	CAP, PIPE, 12IN, WELDED, STEEL, SCH 20 LB, ASTM A234, B GR	$ 1,843.38	9
	CAP, PIPE, 16IN, BW, STEEL, 250 WALL LB, ASTM A234, B GR	$ 1,139.94	6
	CAP, PIPE, 16IN, MECHANICAL JOINT, CAST IRON, 250 LB, W/NITRILE GASKET	$ 2,085.66	6
	CAP, PIPE, 1IN, NPT, BLACK MALLEABLE IRON, 150 LB, CA00151	$ 109.81	113
	CAP, PIPE, 1IN, SW, STEEL, 3000 LB LB, ASTM A105	$ 18.10	5
	CAP, PIPE, 1IN, THD, STEEL, 3000 LB, ASTM A105, B16 GR	$ 61.44	24
	CAP, PIPE, 2-1/2IN, THD, BLACK MALLEABLE IRON, 150 LB, CA00151	$ 15.18	3
	CAP, PIPE, 2IN, BUTT FUSION, POLYETHYLENE, 80 LB, ASTM 2513, SDR 11 GR, PE2406, YELLOW CSA, IAPMO	$ 80.60	65
	CAP, PIPE, 2IN, BW, CARBON STEEL, 150 LB, ASTM A234, B GR	$ 29.08	4
	CAP, PIPE, 2IN, COMPRESSION, ALUM	$ 133.25	13
	CAP, PIPE, 2IN, ELECTROFUSION, PE2406, PE3408, OR PE100, ASTM D2513 AND F1055, MOLDED PE	$ 837.40	79
	CAP, PIPE, 2IN, NPT, BLACK MALLEABLE IRON, 150 LB, CA00151	$ 389.36	133
	CAP, PIPE, 2IN, THD, STEEL, 3000 LB, SCH80	$ 63.90	9
	CAP, PIPE, 3/4, NPT, MALLABLE IRON, 150 LB	$ 81.00	100
	CAP, PIPE, 3/4IN, NPT, STEEL, 3000 LB, SCH 80	$ 11.89	7
	CAP, PIPE, 3/4IN, THD, BRASS, 125 LB	$ 110.26	75
	CAP, PIPE, 3/8IN, THD, BLACK MALLEABLE IRON, 150 LB, CA00151	$ 9.07	13
	CAP, PIPE, 3IN IPS, ELECTROFUSION, PE2406, PE3408, PE100, ASTM D2513 AND F1055, MOLDED PE	$ 312.00	16
	CAP, PIPE, 3IN, BUTT FUSION, POLYETHYLENE, PE2406, ASTM 2513, SDR 11 GR, YELLOW CSA, IAPMO	$ 58.60	20
	CAP, PIPE, 3IN, BOLTED, ALUM AND PLASTIC	$ 82.53	6
	CAP, PIPE, 3IN, BW, CARBON STEEL, 150 LB, ASTM A234, B GR	$ 15.35	2
	CAP, PIPE, 3IN, MECHANICAL JOINT, CAST OR DUCTILE IRON, 250 LB, ANSI/AWWA C153/A21.53IN, W/NITRILE GASKET	$ 125.64	4
	CAP, PIPE, 3IN, NPT, BLACK MALLEABLE IRON, 150 LB, CA00151	$ 251.50	25
	CAP, PIPE, 4IN IPS, ELECTROFUSION, PE 2406, PE3408, OR PE100, ASTM D2513 AND F1055, MOLDED PE	$ 906.25	25
	CAP, PIPE, 4IN, BOLTED, ALUM AND PLASTIC	$ 51.15	3
	CAP, PIPE, 4IN, BW, CARBON STEEL, 150 LB, ASTM A234, B GR	$ 166.68	15
	CAP, PIPE, 4IN, FUSION, POLYETHYLENE, 80 LB, ASTM 2513, SDR 11 GR, PE2406, YELLOW CSA, IAPMO	$ 469.56	84
	CAP, PIPE, 4IN, MECHANICAL JOINT, CAST IRON, 250 LB, ANSI/AWWA C153/A21.53IN, W/NITRILE GASKET	$ 1,962.80	54
	CAP, PIPE, 4IN, NPT, BLACK MALLEABLE IRON, 150 LB	$ 77.14	5
	CAP, PIPE, 6IN IPS, ELECTROFUSION, PE3408, OR PE100, ASTM D2513 AND F1055, MOLDED	$ 476.00	7
	CAP, PIPE, 6IN, BW, STEEL, ASTM A234, B GR	$ 442.29	23
	CAP, PIPE, 6IN, FUSION, POLYETHYLENE, PE2406, 64 LB, ASTM 2513, SDR 13.5 GR, YELLOW	$ 374.10	29
	CAP, PIPE, 6IN, MECHANICAL JOINT, CAST OR DUCTILE IRON, 250 LB, ANSI/AWWA C153/A21.53IN, W/NITRILE GASKET	$ 568.02	12
	CAP, PIPE, 8IN, BUTT FUSION, POLYETHYLENE, PE2406, 64 LB, ASTM, SDR 13.5 GR, YELLOW	$ 593.88	28

Inventory Provided by Affiliate to Duke Energy Kentucky
For the Year Ended December 31, 2008

COMPANY_SOL	CATALOG_DESC	Values Sum of SumOfTRANS_AMT	Sum of SumOfTRANS_QTY
	CAP, PIPE, 8IN, BUTT WELD, CARBON STEEL, .250 WALL	$ 401.87	7
	CAP, PIPE, 8IN, MECHANICAL JOINT, CAST OR DUCTILE IRON, 250 LB, ANSI/AWWA C153/A21.53IN, W/NITRILE GASKET	$ 590.15	8
	CAP, TEST CAP, 1-1/4IN AND LARGER, POLYETHYLENE, FABRICATED	$ 530.32	19
	CAP, TEST CAP, 1IN OUTLET AND SMALLER, POLYETHYLENE AND BRONZE, FABRICATED, F/USE W/MT DEASON TAPPING TEES ONLY	$ 590.85	27
	CAP, TEST, 1-1/4IN IPS X HOSE QUICK DISCONNECT, POLYETHYLENE	$ 22.50	1
	CAP, TEST, M.V.T.T., POLYETHYLENE	$ 128.16	6
	CAP, TEST, PURGE CAP, PE3408 (BLACK), FOR PERFORMANCE PURGE CAP ONLY	$ 22.94	1
	CAP, TESTER, 1IN, POLYETHYLENE	$ 27.16	2
	CAP, TUBE, 1/2IN CTS, PE 3408, .090IN SDR, BLIND END COUPLING	$ 8.87	2
	CAP, TUBE, 1IN CTS, STAB, PE 3408, .099IN/.102IN SDR	$ 5,210.75	702
	CAP, WOOD POLE PRESERVATIVE, 11IN, HIGH-DENSITY POLYETHYLENE, USE IN CONJUNCTION WITH COBRA RODS	$ 244.56	12
	CAP, WOOD POLE PRESERVATIVE, 7IN, HIGH DENSITY POLYETHYLENE, USE IN CONJUNCTION WITH COBRA RODS	$ 304.56	18
	CAP, WOOD POLE PRESERVATIVE, 9IN, HIGH DENSITY POLYETHYLENE, USE IN CONJUNCTION WITH COBRA RODS	$ 325.98	18
	CAPACITOR, BANK, 1200KVAR, 3 PHASE, 7200/12470Y VOLTS, GROUNDED WYE, POLE MOUNTED RACK, SWITCHED W/ 1KVA TRANSFORMER	$ 64,747.91	19
	CAPACITOR, BANK, 1800KVAR, 3 PH, 7200/12470Y VOLTS, GROUNDED WYE, POLE MOUNTED RACK, SWITCHED, W/ 1KVA TRANSFORMER	$ 7,208.12	2
	CAPACITOR, BANK, 600KVAR, 3 PHASE, 7200/12470Y VOLTS, GROUNDED WYE, POLE MOUNTED RACK, SWITCHED, W/ 1KVA TRANSFORMER	$ 3,598.70	1
	CAPACITOR, BANK, 900KVAR, 3 PHASE, 7200/12470Y VOLTS, GROUNDED WYE, POLE MOUNTED RACK, SWITCHED, W/ 1KVA TRANSFORMER	$ 3,242.01	1
	CAPACITOR, LINE, 50KVAR, 2.4KV, BUSHING, 1PH, 2 BUSHING 60 HZ	$ 522.97	2
	CAPACITOR, RACK, PLUG AND LEAD ASSEMBLY- 10 FT	$ 130.06	3
	CARTRIDGE, WELDING POWDER, CAST IRON	$ 125.54	100
	CASE, I325 MOTOROLA RADIO, ARMOR LEATHER, W/ SWIVEL D-RING BELT, CLIP AND LOOP	$ 53.85	3
	CASE, SAFETY GLASSES, OVERSIZE, BLACK VINYL, TOP CLOSING FLAP W/ BELT ATTACHMENT	$ 7.68	6
	CELL, PHOTOELECTRIC, 105/130VAC, 60HZ, OUTDOOR LIGHTING BUTTON EYE	$ 26.97	3
	CELL, PHOTOELECTRIC, 105-130V, 160 JOULE MOV, NEMA, TWISTLOCK, MALE PLUG, SILICON SENSOR,	$ 20.16	6
	CELL, PHOTOELECTRIC, 105-305V, 320 JOULE MOV, NEMA, TWISTLOCK, MALE PLUG, SILICON SENSOR	$ 5,899.85	1,726
	CEMENT, SAKRETE, 80 LB BAG, CONCRETE MIX YIELD 8 SQ FT 1IN THK	$ 777.48	132
	CHAIN, STRAIGHT LINK-BBB, 1IN WD X 3/16INTHK, STEEL, PLATED, PROOF COIN	$ 14.00	20
	CHAMBER, ATMOSPHERIC, FOR BURIED 1ST STAGE REGULATORS	$ 2,345.99	163
	CHEMICAL, ALTERNATING BIOCIDE, LIQUID, 5 GAL	$ 525.00	5
	CHEMICAL, COOLING WATER TREATMENT, LIQUID, 15 GAL DRUM	$ 1,114.05	15
	CHEMICAL, DENATURED ALCOHOL, LIQUID, 1 QUART CAN	$ 6.85	1
	CHEMICAL, MICROORGANISM CONTROL, LIQUID, 15 GALLON DRUM	$ 1,066.05	15
	CHEMICAL, OXIDIZING BIOCIDE, LIQUID, 16 GAL	$ 173.60	16
	CHEMICAL, OXYGEN SCAVENGER, LIQUID, 30 GAL	$ 858.00	60
	CHEMICAL, RYDLYME, LIQUID, 30 GAL DRUM, RID-LIME	$ 595.58	60
	CHEMICAL, SALT, GRANULAR, 80 LB BAG, ICE MELTING	$ 391.19	75
	CHEMICAL, SCALE AND CORROSION INHIBITOR, LIQUID, 30 GAL	$ 1,385.00	30
	CHEMICAL, SCALE INHIBITOR, LIQUID, 30 GAL	$ 1,113.60	30
	CHEMICAL, STEAM LINE TREATMENT, LIQUID, 30 GAL	$ 1,000.00	60
	CHISEL, CAPE, 11/16IN WD, 7/8IN HEX, 17-3/8IN LG, TOOL STEEL	$ 62.75	1
	CHISEL, POWER, CLAY SPADE, 5-1/2IN, 1IN, 16-1/2IN, CARBON STEEL, DIGGING BLADE	$ 76.59	1
	CHISEL, POWER, MACADAM, 5IN WD X 3/8IN THK, 1-1/8IN HEX, 19-1/2IN, STEEL	$ 63.31	1
	CHISEL, POWER, MOIL POINT, 1IN X 4-1/4IN, 14IN, CARBON STEEL, CLAY SPADE	$ -	0
	CHISEL, POWER, PAVING, 1-1/2IN WD, 1-1/8IN HEX, 16-7/8IN, STEEL	$ 77.52	1
	CHISEL, POWER, PAVING, 1-5/16IN WD, 1-1/8IN HEX, APPROX 22IN LG, STEEL	$ 85.62	3
	CHISEL, WOOD, UTILITY, 2IN, 8-1/2IN, STEEL	$ 20.95	2
	CLAMP, BANDING, 3/8IN WD X 4IN ID X 0.20IN THK, STEEL	$ 171.37	1
	CLAMP, GROUNDING, WIRE TO ROD, 10 AWG SOLID 2 STRAND COPPER WIRE, 1/2IN ROD, BRONZE, (100) STANDARD REGISTER	$ 102.51	92
	CLAMP, GROUNDING, WIRE TO ROD, 8 AWG SOLID, 1/0 AWG STR COPPER WIRE, 5/8IN, BRONZE, W/ HEX NUT	$ 1,192.82	1,093
	CLAMP, GROUNDING, WIRE TO TRANSFORMER, #8-2/0S STR, BRONZE, MALE THD	$ 419.89	186
	CLAMP, GUY, GALV. STEEL, 3 BOLT PLAIN	$ 14.91	3
	CLAMP, HOLDING, POLYETHYLENE, ELECTROFUSION COUPLING, 1IN CTS	$ 440.00	4
	CLAMP, HOLDING, POLYETHYLENE, ELECTROFUSION COUPLING, 2IN IPS	$ 665.36	2
	CLAMP, HOLDING, POLYETHYLENE, ELECTROFUSION COUPLING, 4IN IPS	$ 1,289.00	4
	CLAMP, HOLDING, POLYETHYLENE, ELECTROFUSION COUPLING, 6IN IPS	$ 215.40	1
	CLAMP, HOT LINE, ALUMINUM, #1/0ACSR TO 8 ACSR, #1/0 SOLID COPPER LOOP, STIRRUP	$ 5,125.59	902
	CLAMP, HOT LINE, ALUMINUM, 795 KCMIL, #2 SOLID COPPER BAIL, STIRRUP	$ 5,911.35	589

Inventory Provided by Affiliate to Duke Energy Kentucky
For the Year Ended December 31, 2008

COMPANY_SOL	CATALOG_DESC	Values Sum of SumOfTRANS_AMT	Sum of SumOfTRANS_QTY
	CLAMP, HOT LINE, ALUMINUM, MAIN 556KCMIL AAC TO #2ACSR, #2 SOLID, COPPER LOOP, STIRRUP	$ 4,101.68	424
	CLAMP, HOT LINE, BRONZE, 2/0 SOLID TO 6 SOLID COPPER, #1 SOLID COPPER LOOP, STIRRUP, CLAMP BODY STAMPED W/WIRE RANGE OF	$ 5,428.23	414
	CLAMP, HOT LINE, BRONZE, 8 AWG SOLID COPPER-2/0 AWG STRAND COPPER, 8 AWG SOLID COPPER-2/0 AWG STRAND COPPER, SS SPRING ON EYE STEM, W/KEEPER	$ 11,981.64	2,116
	CLAMP, PIPE REPAIR, 12.62IN X 13.02IN X 12IN, SS, 100 LB	$ 333.26	3
	CLAMP, PIPE REPAIR, 1IN ID X 1.315 O.D. X 3IN W, SS, 150 LB	$ 27.30	7
	CLAMP, PIPE REPAIR, 2.38IN X 2.56IN X 8IN LG, SS, 100 LB, FULL CIRCLE, SINGLE BAND, DUCTILE LUGS, ALLOY	$ 138.85	5
	CLAMP, PIPE REPAIR, 2IN OD X 2.375IN O.D. X 6INW, SS, 150 LB	$ 52.50	5
	CLAMP, PIPE REPAIR, 2IN, SS, 350 LB WATER, 175 LB GAS	$ 39.72	8
	CLAMP, PIPE REPAIR, 3.74IN X 4.02IN X 12IN WIDE, CAST IRON, SS, 100 LB	$ 46.59	1
	CLAMP, PIPE REPAIR, 3.74IN X 4.02IN X 8IN WIDE, CAST IRON, SS, FULL CIRCLE, SINGLE BAND, DUCTILE LUGS, ALLOY	$ 32.53	1
	CLAMP, PIPE REPAIR, 4.45IN X 4.86IN X 8IN WD, SS, 100 LB, FULL CIRCLE, SINGLE BAND, DUCTILE LUGS, ALLOY	$ 253.40	7
	CLAMP, PIPE REPAIR, 4.74IN X 5.12 O.D. X 8IN WIDE, CAST IRON, SS, 100 LB, FULL CIRCLE, SINGLE BAND, DUCTILE LUGS, ALLOY	$ 300.38	8
	CLAMP, PIPE REPAIR, 4.74IN X 5.14IN X 12IN LG,, SS, FULL CIRCLE, SINGLE BAND, DUCTILE LUGS, ALLOY	$ 242.72	4
	CLAMP, PIPE REPAIR, 6.56IN X 6.90IN X 12IN WD, SS, 100 LB, FULL CIRCLE, SINGLE BAND, DUCTILE LUGS, ALLOY	$ 65.50	1
	CLAMP, PIPE REPAIR, 6.84IN X 7.24IN X 12IN WD, SS, 100 LB, FULL CIRCLE, SINGLE BAND, DUCTILE LUGS, ALLOY	$ 216.63	3
	CLAMP, PIPE REPAIR, 6.84IN X 7.24IN X 8IN WD, SS, 100 LB, FULL CIRCLE, SINGLE BAND, DUCTILE LUGS, ALLOY	$ 208.97	5
	CLAMP, PIPE REPAIR, 8.54IN X 8.94IN X 12IN WD, SS, 100 LB, FULL CIRCLE, SINGLE BAND, DUCTILE LUGS, ALLOY	$ 227.98	3
	CLAMP, PIPE REPAIR, 8.99IN X 9.39IN X 12IN WIDE, CAST IRON, SS, 100#, DUCTILE LUGS, ALLOY BOLTS AND NUTS, BUNA N	$ 90.54	1
	CLAMP, STATIC, 1/0 ACSR - 4/0 ACSR, ALUMINUM, WITH CAPTIVE KEEPER FOR BAYONET OR POLEMOUNTING	$ 52.49	5
	CLAMP, STRAIN, 0.2IN-0.47IN, ALUM, 7000 LB, QUADRANT, WITH (2) U-BOLTS	$ 216.56	30
	CLAMP, STRAIN, 0.39IN - 0.68IN, A356-T6 ALUM ALLOY, 8000 LBS/	$ 7,756.05	924
	CLAMP, STRAIN, 0.502IN - 0.888IN, ALUM, 10000 LB, CAST ALUM STRAIGHT, SIDE EYES,W/(2) U-BOLTS,W/O	$ 9,013.47	574
	CLAMP, STRAIN, 0.68-1.16IN, 795 KCM &954 KCM 37 STR ALL ALUM, A 356-TG ALUM ALLOY, 12000 LBS, 954KCMIL ACSR (45/7)	$ 3,121.56	207
	CLAMP, STRAIN, 0.90IN - 1.382IN, ALUM, 30000 LB, QUADRANT, WITH (6) U-BOLTS, SOCKET FITTING	$ 704.33	12
	CLAMP, SUSPENSION, .40IN-.82IN (300 KCMIL AND 400 KCMIL - 19 STR, WITH SOCKET EYE, NO LINERS, CGE DRG 915-S	$ 69.32	3
	CLAMP, SUSPENSION, 0.23IN-0.75IN, ALUM, SUSPENSION AND ANGLE CLAMP FOR STATIC, J-HOOK	$ 249.19	20
	CLAMP, SUSPENSION, 0.50IN-1.25IN, ALUM, SUSPENSION AND ANGLE CLAMP HOT STICKABLE	$ 1,020.58	48
	CLAMP, SUSPENSION, 0.7IN-1.06IN, ALUM, CLAMP-TOP	$ 6.39	1
	CLAMP, SUSPENSION, 1/0,4/0,336400CM,477000CM W/O ARMOR ROD AND, ALUM, 18000 LB, AND 0.744IN W/ARMOR ROD	$ 25.36	2
	CLAMP, SUSPENSION, 1IN-1.5IN, ALUM, F/ CLAMP TOP INSULATOR	$ 89.44	12
	CLEANER, ANTI-MICROBIAL SOAP, LIQUID, 18 OZ PUMP BOTTLE, (12) PER PACKAGE	$ 135.66	19
	CLEANER, BOWL, LIQUID VANISH, 32 OZ BOTTLE, 9.25% HYDROCHLORIC ACID12/CS	$ 54.57	12
	CLEANER, CABLE DEGREASER, LIQUID, 16 OZ BOTTLE	$ 278.79	68
	CLEANER, CONTACT, AEROSOL, 16 OZ AEROSOL CAN, PLASTIC SAFE	$ 20.22	1
	CLEANER, DEGREASER, AEROSOL, 18 OZ CAN, NON-FLAMABLE	$ 56.16	6
	CLEANER, DETERGENT, LIQUID, 6 GAL PAIL	$ 109.80	6
	CLEANER, DISWASHING, LIQUID, 12.6 OZ BOTTLE, IVORY, 25 PER CASE	$ 14.16	8
	CLEANER, GENERAL PURPOSE, SPRAY, 20 OZ CAN, ORANGE CITRUS	$ 13.28	6
	CLEANER, GLASS, GLASSES, 4 OZ SPRAY, FOG PRUF	$ 18.43	3
	CLEANER, GLASS, GOGGLES AND GLASSES, TOWELETTE (5IN X 8IN), PACKET	$ 267.36	48
	CLEANER, GLASS, LIQUID WITH AMMONIA, WINDEX, 32 OZ PLASTIC BOTTLE, W/TRIGGER SPRAY HEAD, 12/CS	$ 1,393.71	327
	CLEANER, HAND, CREAM, 2 OZ. TUBE, NEUTROGENA	$ 744.07	173
	CLEANER, HAND, WATERLESS W\PUMICE, 64 OZ BOTTLE, BOTTLE TO HAVE PUMP DISPENSER	$ 331.87	42
	CLEANER, HAND, WATERLESS, PLASTIC BUCKET, LIQ SATURATED TOWELS, CITRUS SCENT, 72 TOWELS	$ 1,607.33	167
	CLEANER, LENS, ALPENCO 50, 1-PT PLASTIC BOTTLE, WITH NO. 70	$ 4.09	1
	CLEANER, PIPE, 96% IPA 4% DEIONIZED WATER, 6IN X 8.5IN LINTFREE WIPE POLYESTER, F/ CLEANING FITTINGS AND PIPE FOR ELECTROFUSION	$ 451.25	40
	CLEANER, PIPE, 96% IPA 4% DEIONIZED WATER, 8" X 6" LINT-FREE POLYESTER, 30/PACK, F/CLEANING PIPE & FITTINGS FOR ELECTROFUSION	$ 579.21	65
	CLEANER, STAINLESS STEEL, LIQUID, 32 OZ CAN, POLISH AND PRESERVATIVE	$ 32.55	3
	CLEANER, VANDALISM MARK REMOVER, AEROSOL, 17 OZ CAN	$ 40.29	6
	CLEVIS, CLEVIS-BALL, STEEL, 1-1/2IN X 3IN X 13/16IN, 30000 LB, 5/8IN PIN	$ 42.52	8
	CLEVIS, CLEVIS-CLEVIS, GALV STEEL, 3-1/2IN X 7/8IN, 30000 LB, PARALLEL, W/5/8IN PINS AND COTTER KEYS	$ 692.29	54
	CLEVIS, CLEVIS-EYE, GALV STEEL, 2-1/2IN X 2-9/16IN X 13/16IN, 18000#, 11/16IN EYE, 1/2IN TONGUE,5/8IN PIN,90 DEG	$ 176.31	14
	CLEVIS, INSULATOR, PRIMARY SPOOL, ZINC PLATED STEEL, USED AT DEAD-ENDS AND CATENARY CORNERS	$ (49.05)	-9
	CLEVIS, SECONDARY, ALUM, 14IN, W/1-5/8IN ALUM PIN AND HUMP COTTER,W/O SPOOL, INSULATOR	$ 1,018.02	48
	CLEVIS, SECONDARY, GALV STEEL, 3IN X 3-1/4IN, 4IN TO 4-1/4IN EXTENSION	$ 1,783.40	341
	CLEVIS, SHACKLE, GALV, 1/2IN, 25000LB, 5/8IN, 1-3/8IN, 2-3/16IN,7/8IN BETWEEN EYES	$ 350.77	74
	CLEVIS, SOCKET, HOT LINE EXTENSION, GALV STEEL, 8-3/8IN CENTER TO CENTER, 30,000 LB, 5/8IN CLEVIS PIN AND COTTER PIN, 1IN THROAT	$ 93.24	6

Inventory Provided by Affiliate to Duke Energy Kentucky
For the Year Ended December 31, 2008

COMPANY_SOL CATALOG_DESC	Values Sum of SumOfTRANS_AMT	Sum of SumOfTRANS_QTY
CLIMBERS, LINEMANS, ALUM ALLOY, BOTTOM STRAPS ATTACHED	$ 237.40	1
CLIP, ELECTRICAL, UNIVERSAL, SOLID COPPER, 40A, 2-7/16IN LG, THD CONNECTION	$ 19.20	24
CLIP, MOUNTING ANGLE, 2-1/2INWD X 2IN L X 1/4INHT, STEEL, HOT DIPPED GALVANIZED	$ 60.75	27
CLIP, WIRE ROPE, 1/4IN, GALV STL, W/RED U-BOLT, W/ROLLED THREADS, CROSBY	$ 9.92	4
CLOTH, RAG, 24IN TO 36IN, WHITE TERRY CLOTH	$ 14,070.36	6,425
CLOTH, RAG, 25 LB BOX, COTTON, SQUARE	$ 2,102.62	400
COAT, PROTECTIVE, XX-LARGE, 6 OZ, NOMEX III A, ROYAL BLUE	$ 78.74	1
COATING, METAL PROTECTIVE, 1 GAL CAN	$ 99.76	2
COCK, CURB, 1/2IN, COMPRESSION, PLASTIC	$ 874.88	32
COCK, CURB, 1/2IN, STAB, PE 2406, 100PSIG, W/BASE	$ 176.07	6
COCK, CURB, 1/2IN, STAB, PE 3408, 100 PSIG, W/ BASE	$ 1,294.32	43
COCK, CURB, 1-1/4IN IPS, STAB, POLYETHYLENE, W/BASE	$ 1,386.48	24
COCK, CURB, 1-1/4IN, COMPRESSION, CARBON STEEL, 175, INCLUDING GROOVED FIXED STIFFENERS	$ 278.68	5
COCK, CURB, 1-1/4IN, COMPRESSION, PLASTIC, 100 PSI	$ 250.05	6
COCK, CURB, 1-1/4IN, THD, BRASS,	$ 126.80	5
COCK, CURB, 1IN, COMPRESSION, PLASTIC	$ 3,244.66	100
COCK, CURB, 1IN, STAB, PE 2406, 90 PSI	$ 28.14	1
COCK, CURB, 1IN, STAB, PE 3408, 90 PSI, SUPPORT AND VALVE TO BE PACKAGED IN THE SAME	$ 6,029.50	232
COCK, CURB, 2IN, THD, BRASS	$ 882.58	11
COCK, FLATHEAD LOCKWING, 1-1/4IN, THD, IRON BODY, BRASS CORE, 100 PSIG, INSULATED UNION WITH F.P.T. TAIL PIECE	$ 1,166.55	35
COCK, FLATHEAD LOCKWING, 1IN, IRON BODY, BRASS CORE, 100 PSIG, INSULATED UNION WITH F.P.T. TAIL PIECE (BLACK	$ 518.43	35
COCK, FLATHEAD, 1IN, FEMALE THD, IRON AND BRASS, 100 PSI	$ 613.08	59
COCK, IBBC FLATHEAD, 1-1/2IN, FEMALE THD, IRON AND BRASS, 175 PSI	$ 942.93	33
COCK, IBBC FLATHEAD, 1-1/4IN, FEMALE THD, IRON AND BRASS, 60, LOCKWING	$ 1,102.87	68
COCK, IBBC FLATHEAD, 3/4IN, FEMALE THD, IRON AND BRASS, 100 PSI	$ 2,377.47	268
COCK, IBBC FLATHEAD, LOCKWING, 2IN, FEMALE THD, IRON AND BRASS, 175 PSI	$ 3,333.88	98
COCK, REDUCING CURB, 1 X 1/2IN, COMPRESSION, PLASTIC, 100 PSI	$ 367.80	10
COCK, VALVE, 1IN CTS, STAB, PE 3408, 76 PSIG, BLIND END	$ 1,527.77	48
COCK, VALVE, 1IN CTS, STAB, PE2406, 76 PSIG, BLIND END	$ 692.73	20
COLLAR, RETAINING, 10LT, BLACK MALLEABLE IRON	$ 275.02	650
COLLAR, RETAINING, 1-1/2IN DIA(45LT), BLACK MALLEABLE IRON	$ 183.21	95
COMPOUND, CAULKING, LATEX, WHITE, 10.3 OZ CARTRIDGE	$ 10.07	7
COMPOUND, CAULKING, SILICONE, GRAY, 10.1 OZ. TUBE	$ 21.40	4
COMPOUND, CHARGE FOR 10-14 GAUGE COPPER WIRE, SEALED TIN PLATED STL DISK, COLOR CODE - BLACK, STD PKG - 20 PER/BX	$ 423.36	241
COMPOUND, HOT MELT PATCH COMPOUND, GREEN, 5 LB BOX, FOR REPAIRING STEEL PIPE COATING	$ 202.00	2
COMPOUND, LEAK FINDING, 55 GALLON DRUM, SUMMER GRADE	$ 396.00	110
COMPOUND, LEAK FINDING, 55 GALLON DRUM, WINTER GRADE	$ 503.25	110
COMPOUND, SEALING, AIR, ALUM GRAY	$ 93.23	6
COMPOUND, SEALING, ANAEROBIC PIPE THREAD, WHITE, 300MIL BOTTLE	$ 35.00	2
COMPOUND, SEALING, DUCT, GRAY, 1 LB. PACKAGE	$ 342.66	156
COMPOUND, SEALING, FOAM, 12 OZ AEROSOL CAN, TOUCH N SEAL QUICK CURE HIGH YIELD	$ 678.51	162
COMPOUND, SEALING, FOAM-2 PART, WHITE, CARDBOARD TUBES	$ 2,927.00	114
COMPOUND, SEALING, GAS SEALANT, BLUE (MEDIUM), TUBE 250 ML, SEALING CAST IRON BELL AND SPIGOT JOINTS	$ 1,836.00	68
COMPOUND, SEALING, MULTI PURPOSE RUBBER SILICONE, CLEAR, 4.7 OZ TUBE, TEMPERATURE RANGE 85 TO 400 DEGREE F	$ 170.94	38
COMPOUND, SEALING, PIPE THREAD, YELLOW, 4 OZ STICK	$ 511.29	222
COMPOUND, SEALING, SILICONE RTV 732, CLEAR, 10.1 OZ CAULKING CARTRIDGE	$ -	0
COMPOUND, SEALING, THREAD, WHITE, 1 QT CAN, STD PKG/12 EA/CASE	$ 430.05	21
COMPOUND, SEALING, THREAD, WHITE, 1-1/4 OZ STICK	$ 465.04	132
COMPOUND, WATERPROOF CEMENT, 10-1/2 LB CAN	$ 478.50	75
CONDUIT, DB-120 HEAVY WALL, 2IN NOM, 2.375 OD, 20 FT LG, 90 DEG C, PVC COVERED, ONE BELLED END, STD PKG/2,800	$ 6.89	20
CONDUIT, DB-120 HEAVY WALL, 4IN NOM, 4.500 OD, 20 FT LG, 90 DEG C, PVC COVERED, ONE BELLED END, STD PKG/20 FT	$ 35.86	40
CONDUIT, EPC HEAVY WALL, 2IN NOM, 2.375IN OD, 10 FT LG, SCHEDULE 40, RIGID PVC NONMETALLIC, ONE BELLED END, STD PKG/1400 FT	$ 38.16	80
CONDUIT, EPC HEAVY WALL, 4IN NOM, 4.500 OD, 10 FT LG, SCH 40, RIGID PVC NONMETALLIC, ONE BELLED END, STD PKG/570 FT	$ 40.28	30
CONDUIT, EPC-80 EXTRA HVY WALL, 3IN NOM, 3.500IN OD, 10 FT LG, SCH 80, RIGID PVC NONMETALLIC, ONE BELLED END, STD PKG/880 FT	$ 27.88	20
CONDUIT, RIGID, 1IN NOMINAL OD, 10FT LG, ALUM, MALE THD	$ 614.57	350
CONDUIT, RIGID, 1IN OD, 10FT LG, PVC COATED GALVANIZED STEEL	$ 1,470.00	350
CONDUIT, RIGID, 2IN NOMINAL, 2.375IN OD, 10FT LG, ALUM, THREADED	$ 159.77	40

Inventory Provided by Affiliate to Duke Energy Kentucky
For the Year Ended December 31, 2008

COMPANY_SOL CATALOG_DESC	Values Sum of SumOfTRANS_AMT	Sum of SumOfTRANS_QTY
CONDUIT, SPLIT DUCT, 3IN NOM, 3.500 OD, 10 FT LG, SCH 40, PVC, TONGUE AND GROOVE, STD PKG/500	$ 478.80	190
CONDUIT, SPLIT DUCT, 4IN NOM, 4.500 OD, 10 FT LG, SCH 40, PVC, TONGUE AND GROOVE, STD PKG/290	$ 151.45	40
CONDUIT, TRENCHLESS, 4IN NOMINAL ID, 4.50IN OD, 20 LG, SCH 40, PVC	$ 2,082.62	620
CONE, SAFETY, ORANGE, 18IN, PVC, W/REFLECTIVE COLLARS	$ 566.56	68
CONE, SAFETY, REFLECTIVE COVER, 28IN, PVC	$ 6,615.52	587
CONNECTOR, CONDUIT, LIQUIDTIGHT FLEXIBLE LIQUID, MOLDED PLASTIC, 3/4 MPT HUB, 3/4 IN, 3/4IN COMPRESSION, SWIVELLOK TO ANY DEGREE DEG	$ 83.25	15
CONNECTOR, CONTAINER, PVC URD PRINT CONTAINER W/CAP AND POLE MOUNTING, BRACKET PER CGE	$ 288.00	8
CONNECTOR, ELECTRICAL, SLEEVE, #14 AWG - #2 AWG COPPER OR ALUMINUM, BRONZE SCREW,	$ 462.52	270
CONNECTOR, ELECTRICAL, BOLTED WEDGE, #4/0 AAC OR 336 KCMIL ACSR, 4-HOLE PAD TAP	$ 1,377.23	54
CONNECTOR, ELECTRICAL, BOLTED WEDGE, 336 KCMIL ACSR THRU 636 KCMIL AAC, 4-HOLE PAD TAP	$ 4,352.47	175
CONNECTOR, ELECTRICAL, BOLTED WEDGE, 336.4 KCMIL AAC OR ACSR TO 2/0 OR 3/0 OR 4/0 AL, OR CU, ALUM	$ 121.55	9
CONNECTOR, ELECTRICAL, BOLTED WEDGE, 336.4 KCMIL AAC OR ACSR TO 336.4 KCMIL, AAC OR ACSR, ALUM	$ 171.14	12
CONNECTOR, ELECTRICAL, BOLTED WEDGE, 477 KCMIL AAC OR ACSR OR 556.4 KCMIL, AAC TO 1/0 OR 2/0 OR 3/0 AL OR CU, ALUM	$ 430.19	31
CONNECTOR, ELECTRICAL, BOLTED WEDGE, 477KCMIL AAC OR ACSR 556KCMIL AAC TO, 336 OR 397KCMIL AAC OR ACSR, ALUM	$ 274.23	18
CONNECTOR, ELECTRICAL, BOLTED WEDGE, 477KCMIL AAC OR ACSR OR 556KCMIL AAC TO 4/0, AL OR CU, ALUM	$ 206.49	15
CONNECTOR, ELECTRICAL, BOLTED WEDGE, 477KCMIL AAC OR ACSR OR 556KCMIL AAC TO, 477 KCMIL AAC OR ACSR, ALUM	$ 2,620.95	185
CONNECTOR, ELECTRICAL, BOLTED WEDGE, 795 KCMIL AAC OR ACSR TO 2 OR 1/0 OR 2/0 AL OR, CU, ALUM	$ 85.79	3
CONNECTOR, ELECTRICAL, BOLTED WEDGE, 795 KCMIL AAC OR ACSR TO 2 OR 1/0 OR 2/0 AL, OR CU, ALUM	$ 82.23	3
CONNECTOR, ELECTRICAL, BOLTED WEDGE, 795 KCMIL AAC THRU 954 KCMIL AAC, 4-HOLE PAD TAP	$ 1,442.12	53
CONNECTOR, ELECTRICAL, BOLTED WEDGE, 795 KCMIL, AAC OR ACSR TO 397 OR 477 OR 556,, 4KCMIL AAC OR ACSR, ALUM	$ 720.26	29
CONNECTOR, ELECTRICAL, BOLTED WEDGE, 795KCMIL AAC OR ACSR TO 795KCMIL AAC OR ACSR,, ALUM	$ 387.40	15
CONNECTOR, ELECTRICAL, BOLTED WEDGE, 954 KCMIL AAC OR ACSR TO 336.4 KCMIL THRU 477, KCMIL AL, ALUM	$ 302.98	12
CONNECTOR, ELECTRICAL, BOLTED WEDGE, 954 KCMIL AAC OR ACSR TO 477 KCMIL THRU 636, KCMIL, AL, ALUM	$ 303.98	12
CONNECTOR, ELECTRICAL, BOLTED WEDGE, 954KCMIL AAC OR ACSR TO 636 OR 795KCMIL AAC OR, ACSR, ALUM	$ 2,112.03	79
CONNECTOR, ELECTRICAL, CABLE, 500 KCM COPPER, STRAIGHT, INDENT, COPPER	$ 115.60	25
CONNECTOR, ELECTRICAL, COMPRESSION COLOR CODE RED, BLUE, 5/8 DIA. UNINS #2 STR CU OR AL TO #4 SOLID CU, USE 5/8IN DIE OF TOOL #0-51	$ 75.85	280
CONNECTOR, ELECTRICAL, COMPRESSION LOADBREAK ELBOW, 15 KV, 200A, REPLACEMENT CONTACT	$ 473.33	112
CONNECTOR, ELECTRICAL, COMPRESSION, SLEEVE, #2 STRANDED CU OR AL TO #2 STRANDED, CU OR AL, RED RED	$ 369.56	1,350
CONNECTOR, ELECTRICAL, COMPRESSION, SLEEVE, #4 STRANDED CU OR AL TO #4 STR. CU OR AL, ORANGE-ORANGE	$ 315.40	950
CONNECTOR, ELECTRICAL, COMPRESSION, SLEEVE, 1/0 STRANDED CU OR AL TO #2 STR CU OR AL, YELLOW-RED	$ 164.40	600
CONNECTOR, ELECTRICAL, COMPRESSION, SLEEVE, 2 AWG STR., NO.2 TRIPLEX SLEEVE, 5/8IN DIA	$ 563.53	500
CONNECTOR, ELECTRICAL, COMPRESSION, SLEEVE, 350 MCM, ALUM, NON-TENSION	$ 33.94	9
CONNECTOR, ELECTRICAL, COMPRESSION, SLEEVE, 4/0 AL OR CU TO 4/0 AL OR CU, NON-TENSION	$ 183.98	102
CONNECTOR, ELECTRICAL, COMPRESSION, SLEEVE, 4/0 AWG STRAND X 1/0 AWG STRAND COPPER OR ALUM	$ 133.75	113
CONNECTOR, ELECTRICAL, COMPRESSION, SLEEVE, 4/0 STR CU OR AL TO 2/0 STR CU OR AL, COLOR CODE PINK/GRAY	$ 12.49	9
CONNECTOR, ELECTRICAL, COMPRESSION, SLEEVE, 4AWG 7 STR AA, ALUM SEMI-TENSION	$ 339.23	410
CONNECTOR, ELECTRICAL, COMPRESSION, SLEEVE, 954 MCM, 45 X 7 STRANDED ACSR	$ 150.75	3
CONNECTOR, ELECTRICAL, COMPRESSION, TERMINAL LUG, 500KCM STR, (2) 9/16IN HOLES	$ 530.11	90
CONNECTOR, ELECTRICAL, COMPRESSION,SLEEVE, #2 STRANDED CU OR AL TO #4 STR, CU OR AL, RED- ORANGE	$ 251.66	950
CONNECTOR, ELECTRICAL, COMPRESSION,SLEEVE, 2/0 STR CU OR AL TO 2/0 STR CU OR AL, COLOR CODE GRAY	$ 44.66	38
CONNECTOR, ELECTRICAL, COMPRESSION,SLEEVE, 500 KCM, STRANDED, ALUM	$ 343.59	39
CONNECTOR, ELECTRICAL, ELBOW, W/1/0 GROUNDING CABLE TERMINATED	$ 1,740.20	7
CONNECTOR, ELECTRICAL, FUSABLE STREET LIGHT, #12-#4 SOLID ADN #14-#6 STRANDED COPPER, STRAIGHT MODEL	$ 128.83	8
CONNECTOR, ELECTRICAL, FUSABLE STREET LIGHT, #14-#2 AL AND #14-#4 COPPER, 2 TAP MODEL	$ 310.32	16
CONNECTOR, ELECTRICAL, H- TYPE, #7, 4/0 AWG 6X1 STRAND ACSR, 3/0 AWG 6X1 STRAND ACS, 0.563IN TO 0.461IN WIRE SIZE	$ 175.01	275
CONNECTOR, ELECTRICAL, H-TYPE #4, 3/0 AWG 19 STRAND AA, 1 AWG 7 STRAND AA, 2/0 AW, ALL ALUM AND 2/0 AWG 6X1 STRANDED ALUM CORE	$ 416.63	736
CONNECTOR, ELECTRICAL, H-TYPE, #3, 2/0 AWG 7X1 STRAND ACSR, 1/0 AWG 6X1 STRAND ACS, REINFORCED, 1/O AWG 6X1 STRANDED ALUM CORE	$ 25.55	43
CONNECTOR, ELECTRICAL, H-TYPE, #5, 4/0 AWG 6X1 STRAND ACSR, 4/0 AWG 7 STRAND AA, COMPACT AND 1 AWG 7 STRAND COPPER, 6 AWG SOLID	$ 696.19	1,229
CONNECTOR, ELECTRICAL, H-TYPE, 1/0 AWG 6 X 1 STR ACSR, 2 AWG 7 STR AA, 0.398IN-0.268IN, 0.332IN-0.169IN WIRE SIZE	$ 668.01	1,923
CONNECTOR, ELECTRICAL, H-TYPE, 2 AWG SOLID COPPER, 6 AWG SOLID COPPER, 0.258IN TO 0.162IN AND 0.258IN TO 0.162IN	$ 1,259.52	1,615
CONNECTOR, ELECTRICAL, H-TYPE, 4 AWG SOLID, 6 AWG SOLID AND 9 AWG, 12 AWG, PARALLEL GROOVE	$ 80.95	280
CONNECTOR, ELECTRICAL, H-TYPE, 4/0 AWG 19 STR, 2/0 AWG 7 STR AND 2 AWG, 0.528IN-0.414IN, 0.258IN-0.162IN WIRE SIZE,	$ 186.44	79
CONNECTOR, ELECTRICAL, H-TYPE,, 4/0 AWG 6X1 STRAND ACSR, 3/0 AWG 6X1 STRAND ACS, REINFORCED, 3/0 AWG 6X1 STRANDED ALUM CORE	$ 775.24	1,250
CONNECTOR, ELECTRICAL, LOADBREAK ELBOW, #1/0 AWG ALUM, 35KV, 200A	$ 1,635.99	12
CONNECTOR, ELECTRICAL, LOADBREAK ELBOW, #4/0 AWG ALUM, 15KV, 200A W/TEST POINT AND CONNECTOR	$ 925.72	47
CONNECTOR, ELECTRICAL, LOADBREAK REPAIR ELBOW, #2 AWG ALUM, 15KV-200A, W/TEST POINT AND CONNECTOR	$ 1,330.90	11
CONNECTOR, ELECTRICAL, LOADBREAK REPAIR ELBOW, #4/0 AWG ALUM, 15 KV, 200 A, W/CONCENTRIC NEUTRAL CABLE	$ 360.99	3

Inventory Provided by Affiliate to Duke Energy Kentucky
For the Year Ended December 31, 2008

COMPANY_SOL CATALOG_DESC	Values Sum of SumOfTRANS_AMT	Sum of SumOfTRANS_QTY
CONNECTOR, ELECTRICAL, LOADBREAK, ELBOW, #2 AWG ALUM, 15KV, 200A W/CONNECTOR FOR	$ 3,179.61	149
CONNECTOR, ELECTRICAL, LOADBREAK, ELBOW, 1/0 SOLID ALUM. 15KV, 200A	$ 11,652.21	503
CONNECTOR. ELECTRICAL, PARALLEL GROOVE, 1/0 AWG 19 STRAND, 2 AWG 7 STRAND, 0.373IN TO 0.292IN WIRE SIZE,, COPPER COMPRESSION, "H" SECTION	$ 5.28	6
CONNECTOR, ELECTRICAL, PARALLEL GROOVE, 4/0 AWG 19 STRAND, 2/0 AWG 19 STRAND AND 4/0 AW, 0.528IN TO 0.419IN WIRE SIZE, COMPRESSION, "H" SECT	$ 29.40	12
CONNECTOR, ELECTRICAL, PARALLEL GROOVE, 500 TO 400 KCMIL, TAP-500 KCMIL-1/0 STR. COPPER, TWO BOLT, W/SPACER	$ 599.94	66
CONNECTOR, ELECTRICAL, PARALLEL GROOVE, MAIN - 4/0 TO 2/0, TAP - 4/0-6 SOLID COPPER, TWO BOLT, W/SPACER	$ 317.05	73
CONNECTOR, ELECTRICAL, PEDESTAL, #10 SOLID - 500 KCMIL ALUM OR COPPER, 8-HOLE W/COVER,	$ 113.42	8
CONNECTOR, ELECTRICAL, PEDESTAL, (4) 1/0 AWG TO 750 MCM, ALUM, W/SET SCREWS,	$ 246.46	24
CONNECTOR, ELECTRICAL, PEDESTAL, 1/0 AWG X 750 MCM, ALUMINUM, (6) POSITION, W/SET SCREWS	$ 282.60	18
CONNECTOR, ELECTRICAL, PEDESTAL, 2 AWG TO 500 MCM, ALUM, 4 POSITION	$ 1,374.14	309
CONNECTOR, ELECTRICAL, PEDESTAL, 2 AWG-500 KCM, ALUM, (6) POSITION	$ 596.22	92
CONNECTOR, ELECTRICAL, PORTABLE FEED THRU, #2 OR #4/0 STRANDED ALUM,1/C, 15KV POLY CONC., HORIZONTAL MOUNTED, RATED 200 AMPS	$ 587.28	7
CONNECTOR. ELECTRICAL, PULL BOX, 10 AWG-500 KCM, SUBMERSIBLE, W/ PREMOLDED RUBBER COVER	$ 819.94	41
CONNECTOR, ELECTRICAL, PULLBOX, 10 AWG-500 KCM, ALUM, (4) POSITION, SUBMERSIBLE,, W/PREMOLDED RUBBER COVER	$ 623.50	43
CONNECTOR, ELECTRICAL, PULLBOX, 8-CONDUCTOR, 500K, ALUM PEDESTAL,	$ 516.72	22
CONNECTOR, ELECTRICAL, SERVICE, 4/0 ALUM. 0.522-0.575IN PREFORMED COMPRESSION	$ 118.80	33
CONNECTOR, ELECTRICAL, SLIP- FIT, 6 CONDUCTOR, 500KCM TO #2 (STD 75-150KVA), W/5/8IN DIA STUD HOLE	$ 865.16	112
CONNECTOR, ELECTRICAL, SLIP-FIT, 12-CONDUCTOR, 250 KCM TO #6, W/1IN STUD HOLE	$ 365.39	12
CONNECTOR, ELECTRICAL, SLIP-FIT, 4 CONDUCTOR,750KCMIL, W/ 1IN STUD HOLE	$ 982.90	48
CONNECTOR, ELECTRICAL, SLIP-FIT, 6-CONDUSTOR, 500KCM T0 #2, W/ 1IN DIA STUD HOLE	$ 151.76	18
CONNECTOR, ELECTRICAL, SPLIKT BOLT, 2/0 AWG STRAND X 2 AWG SOLID, HIGH STRENGTH BRONZE ALLOY	$ 893.66	468
CONNECTOR, ELECTRICAL, SPLIT BOLT, 1/0 AWG STRAND X 4 AWG SOLID, HIGH STRENGTH BRONZE ALLOY	$ 544.34	216
CONNECTOR, ELECTRICAL, SPLIT BOLT, 4/0 AWG STRAND X 2 AWG SOLID, HIGH STRENGTH BRONZE ALLOY	$ 1,676.56	200
CONNECTOR, ELECTRICAL, SPLIT BOLT, 4-8 AWG SOLID	$ 236.51	200
CONNECTOR, ELECTRICAL, SPLIT BOLT, 8 AWG STRAND-10 AWG, HIGH STRENGTH BRONZE ALLOY	$ 54.72	119
CONNECTOR, ELECTRICAL, SPLITBOLT, #2 AWG SOLID OR #3 STR TO #6, 3-WAY CONDUCTOR CONNECTOR	$ 7,291.36	7,569
CONNECTOR, ELECTRICAL, SPLITBOLT, #4 SOLID OR #5 STR TO #8, 3-CONDUCTOR CONNECTOR	$ 143.53	200
CONNECTOR, ELECTRICAL, SPLITBOLT, 6 AWG SOLID - 7 STR TO 8 AWG, 3-WAY CONDUCTOR	$ 112.68	200
CONNECTOR, ELECTRICAL, STUD, CABLE, 1/2IN-13, 6 AWG SOLID-1 AWG STRAND COPPER, THD	$ 35.29	16
CONNECTOR, ELECTRICAL, TAP LUG, #6 SOL, 250 KCM, NEMA SPACING OF 1-3/4IN, CGE SPEC. 136B	$ 90.68	9
CONNECTOR, ELECTRICAL, TAP LUG, 1/0 SOL, 500KCM, SINGLE, 3/4IN MAX THICKNESS OF FLAT MOUNT	$ 576.89	96
CONNECTOR, ELECTRICAL, TAP LUG, 6 AWG, 250 KCM STR, SINGLE	$ 179.63	38
CONNECTOR, ELECTRICAL, TAP LUG, STR 1/0 SOL, 500KCM, DOUBLE	$ 327.79	33
CONNECTOR, ELECTRICAL, TERMINAL, LUG, 300 KCMIL - 800 KCMIL ALUM OR COPPER, SET SCREW, HIGH STENGTH ALUM ALLOY, (1) 21/32IN HOLE, NO INS	$ 121.70	16
CONNECTOR. ELECTRICAL, TERMINAL, LUG, 4 AWG SOLID COPPER, COMPRESSION, ALUM, 11/16IN HOLE	$ 253.80	73
CONNECTOR, ELECTRICAL, TERMINAL, LUG, 477KCM 26X7 STRAND ACSR, 556 AAC, COMPRESSION, ALUM, (2) 9/16IN HOLE, NO INS, STRAIGHT, REINFORCED	$ 2,081.15	66
CONNECTOR, ELECTRICAL, TERMINAL, LUG, 900 KCM 45X7 STRAND ASCR, 0R 954 KCM AAC, COMPRESSION, ALUM, (4) 9/16IN HOLE, NO INS	$ 169.20	6
CONNECTOR, ELECTRICAL, TERMINAL, SPADE, 500KCM- #2 STRANDED, BOLTED, ALUM, NO INS, 10 HOLE, 6 CONDUCTOR	$ 3,441.82	199
CONNECTOR, ELECTRICAL, TERMINAL, SPADE, 6 EA 9/16IN DIA . HOLES, COPPER TIN PLATED, TAPPED 5/8-11 UNC, NONE INS, COPPER TIN PLATED	$ 208.80	4
CONNECTOR, ELECTRICAL, TERMINAL, SPADE, 750 KCMIL-2 AWG	$ 136.33	4
CONNECTOR, ELECTRICAL, TERMINAL, SPADE, 750KCM - 1/0, SET SCREW, ALUM, SPADE, NO INS, 10-HOLE, 6-CONDUCTOR W/INHIBITOR	$ 3,040.42	118
CONNECTOR, ELECTRICAL, TERMINAL, SPADE, N/A, 6 EA 9/16IN DIA. HOLES, COPPER TINN PLATED, TAPPED FOR 1IN STUD, NONE INS, CONNECTORELECTRIC	$ 193.80	4
CONNECTOR, ELECTRICAL, TRANSFORMER, MULTI TAP, FLAG, 2 CONDUCTOR, 500 KCM-#2,, TO 500 KCM	$ 965.50	92
CONNECTOR, ELECTRICAL, TRANSFORMER, MULTI TAP, FLAG, 4 CONDUCTOR, 250KCM-#2	$ 224.81	36
CONNECTOR, ELECTRICAL, VISE, 2-#2 STRANDED CU-MAX - 2 #6 SOLID MIN., NON-REMOVABLE	$ 625.89	75
CONNECTOR, ELECTRICAL, VISE, 2-2/0 STR CU MAX 2 #6 SOLID MIN, NON-REMOVABLE	$ 817.58	100
CONNECTOR, ELECTRICAL, WIRE NUT, 18-12 AWG	$ 18.12	300
CONNECTOR, ELECTRICAL, WIRE NUT, 76B, 18-10 GAUGE	$ 13.91	100
CONNECTOR, ELECTRICAL,TEE, H- TYPE, 2, 4, 6 AWG SOL ALUM OR COPPER RUN, 2, 4, 6 SOL TAP, ALUM, COMPRESSION RUN, COMPRESSION TAP, CABLE-CABLE	$ 135.30	410
CONNECTOR, ELECTRICAL,TEE, OVERHEAD-SERVICE ENTRANCE SLEEVE, 5/8IN DIA UNINSULATED #4 STR CU OR ALUM	$ 38.04	150
CONNECTOR, ELECTRICAL,TEE, SPLICER-SERVICE ENTRANCE, 5/8IN DIA UNINSULATED 1/0 STRANDED COPPER, OR ALUM TO #2 SOLID COPPER, COLOR CODED YELL	$ 98.92	400
CONTACT, ASSEMBLY SWITCH, 1200A-1600A, 69KV, V SINGLE-POLE, F/ROYAL SWITCH	$ 9,450.00	30
CONTACT, POWER	$ 94.14	1
CONTAINER, CAP BRUSH, 3-1/8IN DIA X 5IN LG, 1 PT, POLYETHYLENE	$ 34.00	10
CONTROL, CAPACITOR, AUTODAPTIVE VOLTAGE,4 BLADE SOCKET MOUNTING	$ 6,187.60	10
COOLER, DRINKING WATER, 3 GALLON, 10-3/4IN DIA X 17IN HIGH, ALL PLASTIC, STENCILED - DRINKING WATER ONLY ON LID	$ 602.32	28
COOLER, DRINKING WATER, 5 GAL, 18-3/4IN HT X 12-1/2IN DIA, PLASTIC, STENCILED-DRINKING WATER ONLY-ON TOP OF LID	$ 343.56	14

Inventory Provided by Affiliate to Duke Energy Kentucky
For the Year Ended December 31, 2008

COMPANY_SOL CATALOG_DESC	Values Sum of SumOfTRANS_AMT	Sum of SumOfTRANS_QTY
CORD, EXTENSION, (2) 14 AWG, 120VAC, 50FT, 3-PRONG, 1	$ 96.16	4
CORD, EXTENSION, (3) 16 AWG, 25FT	$ 196.65	23
CORD, SAFETY GLASSES, 1/8IN DIA X 28IN LONG, FLEXIBLE, BLACK, CHUMS	$ 7.62	6
COUPLER, HOSE, QUICK, 1/4IN, FEMALE, BRASS	$ 442.04	52
COUPLER, HOSE, QUICK, 1/4IN, MALE, BRASS	$ 160.29	43
COUPLING, CONDUIT, COUPLING, 1IN, FNPT, PVC COATED GALVANIZED STEEL	$ 163.60	40
COUPLING, CONDUIT, RIGID, 3IN, SOCKET, PVC, STD PKG/30	$ 7.42	10
COUPLING, CONDUIT, RIGID, 5IN, SOCKET, PVC, STD PKG/20	$ 9.28	4
COUPLING, CONDUIT, RIGID, 6IN, SOCKET, PVC, STD PKG/5	$ 40.86	4
COUPLING, CONDUIT, SOCKET TYPE, 4IN, RIGID NONMETALLIC	$ 5.82	4
COUPLING, CONDUIT, STANDARD RIGID, 2IN, DEEP SOCKET, PVC, STD PKG/25	$ 1.28	2
COUPLING, CONDUIT, STANDARD RIGID, 2IN, SOCKET, PVC, STD PKG/30	$ 2.65	8
COUPLING, CONDUIT, STANDARD RIGID, 4IN, DEEP SOCKET, PVC, STD PKG/10	$ 40.71	19
COUPLING, GROUND ROD, 5/8IN ID FULL, GALVANIZED, FORCE FIT, UNTHD	$ 83.28	24
COUPLING, PIPE, 12" CI (13.20" OD) X 12" IPS STL, BOLTED COMPRESSION, INSULATING, CARB STL, EPOXY COATED, 150PSIG LB, CFR 49 PART 192, 1 GR	$ 551.54	2
COUPLING, PIPE, 1/2IN CTS, STAB, PE 3408, ASTM D-2513, D-3350, GAS GRADE POLYETHYLENE GR, MECHANICAL, W/STIFFENERS, .090IN SDR	$ 156.73	40
COUPLING, PIPE, 1/2IN X 1IN, ELECTROFUSION, POLYETHLENE, 76# @ 73.4 DEGREES F LB, ASTM F 1055, PE 2406 GR, F/JOINING 1/2IN CTS AND 1IN CTS P	$ 80.40	10
COUPLING, PIPE, 1/2IN X 3/8IN, THD, BLACK MALLEABLE IRON, 150 LB, CO-035-51	$ 9.43	10
COUPLING, PIPE, 1/2IN, ELECTROFUSION, POLYETHLENE, 96# @ 73.4 DEGREES F LB, ASTM F1055, PE 2406 GR	$ 32.50	10
COUPLING, PIPE, 1/2IN, THD, BLACK MALLEABLE IRON, 150 LB, CO-034-51	$ 9.73	12
COUPLING, PIPE, 1/4IN X 1/8IN, THD, BLACK MALLEABLE IRON, 150 LB, CO-035-51	$ 37.83	34
COUPLING, PIPE, 1/4IN, THD, BLACK MALLEABLE IRON, 150 LB, CO-034-51	$ 37.80	36
COUPLING, PIPE, 1-1/2IN IPS STEEL X 1-1/4IN IPS PLASTIC, COMPRESSION, BLACK MALLEABLE IRON, 150 LB LB, ASTM A402, SDR 10 POLYETHYLENE	$ 50.50	2
COUPLING, PIPE, 1-1/2IN IPS X 1IN CTS, COMPRESSION, MALLEABLE IRON, STEEL PIPE TO CTS POLYETHYLENE	$ 167.57	7
COUPLING, PIPE, 1-1/2IN X 1-1/4IN, THD, BLACK MALLEABLE IRON, 150 LB, CO-035-51	$ 122.79	44
COUPLING, PIPE, 1-1/2IN X 1IN, THD, BLACK MALLEABLE IRON, 150 LB, CO-035-51	$ 138.83	43
COUPLING, PIPE, 1-1/2IN X 3/4IN, THD, BLACK MALLEABLE IRON, 150 LB, CO-035-51	$ 39.99	11
COUPLING, PIPE, 1-1/2IN, THD, BLACK MALLEABLE IRON, 150 LB, CO-034-51	$ 51.01	20
COUPLING, PIPE, 1-1/4IN CTS X 1IN CTS, STAB, PE 3408, ASTM D-2513, D-3350, W/STIFFENERS, .090IN/.099IN/.102IN SDR/WALL	$ 124.58	3
COUPLING, PIPE, 1-1/4IN IPS PLASTIC X 1-1/4IN COPPER TUBE, COMPRESSION, STEEL, STIFFENER F/1-1/4IN IPS PLASTIC INCLUDED	$ 203.10	6
COUPLING, PIPE, 1-1/4IN IPS X 1IN CTS, STAB, PE 3408, ASTM D-2513, D-3350, W/STIFFENERS, SDR 10.090IN/.099IN/.102IN	$ 523.20	30
COUPLING, PIPE, 1-1/4IN IPS, BOLTED, POLYETHYLENE TO STEEL, 84 PSIG LB, PE 2406, SDR 10 GR, W/STIFFENER	$ 228.51	5
COUPLING, PIPE, 1-1/4IN IPS, ELECTROFUSION, POLYETHLENE, ASTM F1055, PE 2406 GR, 88# @ 73.4 DEGREES F	$ 117.42	30
COUPLING, PIPE, 1-1/4IN X 1IN, THD, BLACK MALLEABLE IRON, 150 LB, CO-035-51	$ 88.26	40
COUPLING, PIPE, 1-1/4IN X 3/4IN, THD, BLACK MALLEABLE IRON, 150 LB, CO-035-51	$ 35.33	18
COUPLING, PIPE, 1-1/4IN, STAB, POLYETHYLENE, PE 3408, ASTM D-2513, W/ STIFFENERS	$ 881.18	40
COUPLING, PIPE, 1-1/4IN, THD, BLACK MALLEABLE IRON, 150 LB, CO-034-51	$ 102.79	55
COUPLING, PIPE, 1-1/4INIPS X 1INCTS, COMPRESSION, BLACK MALLEABLE IRON, 150 LB, ASTM A402, .099 WALL POLYETHYLENE	$ 165.42	6
COUPLING, PIPE, 12" IPS X 12" IPS, PE OR STL, BOLTED COMPRESSION, RESTRAINING CONDUCTIVE, CARBON STL EPOXY COATED, 150 PSIG LB, ASTM D2513,	$ 6,340.53	9
COUPLING, PIPE, 12IN CI (13.20IN OD) X 12IN IPS STL, BOLTED COMPRESSION INSULATING, CARBON STL, EPOXY COATED, 150 PSIG LB, CFR 49 PART 192	$ 924.50	2
COUPLING, PIPE, 12IN IPS, BOLTED COMPRESSION, CONDUCTIVE, CARBON STL, EPOXY COATED, 150 PSIG PRESSURE SEAL LB, CFR 49 PART 192	$ 2,654.75	16
COUPLING, PIPE, 12IN IPS, BOLTED COMPRESSION, INSULATING, CARBON STL, EPOXY COATED, 400 PSIG PRESSURE SEAL LB, CFR 49 PART 192	$ 1,533.13	8
COUPLING, PIPE, 12IN, ELECTROFUSION, POLYETHYLENE, 64 LB, ASTM F1055	$ 2,690.74	16
COUPLING, PIPE, 1-3/8IN, COMPRESSION, BRASS, 1 GR, WITH BEAD TIPPED GASKET, F/COPPER	$ 180.00	4
COUPLING, PIPE, 16IN (17.40IN X 16.00IN), BOLTED, CAST IRON TO STEEL, 16IN CENTER RING	$ 1,394.06	2
COUPLING, PIPE, 16IN, BOLTED, STEEL, 7IN CENTER RING	$ 784.92	3
COUPLING, PIPE, 16IN, BOLTED, STEEL, INSULATING, 7IN CENTER RING	$ 1,875.00	4
COUPLING, PIPE, 1IN CTS PLASTIC X 1-1/4IN COPPER TUBE, COMPRESSION, BRASS, STIFFENER F/1IN CTS .099 WALL PLASTIC INCLUDED	$ 1,702.80	60
COUPLING, PIPE, 1IN CTS PLASTIC X 1IN COPPER TUBE, COMPRESSION, BRASS, STIFFENER F/.099 WALL PLASTIC INCLUDED	$ 3,198.14	78
COUPLING, PIPE, 1IN CTS PLASTIC X 3/4IN COPPER TUBE, COMPRESSION, BRASS, STIFFENER F/.099 WALL PIPE INCLUDED	$ 3,738.00	94
COUPLING, PIPE, 1IN CTS X 1/2IN CTS, STAB, PE 3408, ASTM D-2513, GAS GRADE POLYETHYLENE GR, W/STIFFENERS, F/ .090IN/.099IN/.102IN SDR/WALL	$ 448.83	61
COUPLING, PIPE, 1IN CTS, ELECTROFUSION, POLYETHYLENE, ASTM F1055	$ 2,388.41	838
COUPLING, PIPE, 1IN CTS, STAB, PE 3408, ASTM D-2513, D3350, GAS GRADE POLYETHYLENE GR, W/STIFFENERS, F/.090IN/.099IN/.102IN WALL	$ 2,692.98	415
COUPLING, PIPE, 1IN CTS, STAB, POLYETHYLENE, ASTM D-2513, PE2406 GR, 24IN LONG, 76 PSIG	$ 29.19	2
COUPLING, PIPE, 1IN STEEL X 1INCTS, COMPRESSION, BLACK MALLEABLE IRON, 150 LB, ASTM A402, .099 WALL POLYETHYLENE	$ 60.14	3
COUPLING, PIPE, 1IN X 1/2IN, THD, BLACK MALLEABLE IRON, 150 LB, CO-035-51	$ 41.65	24
COUPLING, PIPE, 1IN X 3/4IN, THD, BLACK MALLEABLE IRON, 150 LB, CO-035-51	$ 190.26	113

Inventory Provided by Affiliate to Duke Energy Kentucky
For the Year Ended December 31, 2008

COMPANY_SOL CATALOG_DESC	Values Sum of SumOfTRANS_AMT	Sum of SumOfTRANS_QTY
COUPLING, PIPE, 1IN X 3/4IN, THD, BRASS	$ 8.62	2
COUPLING, PIPE, 1IN, R AND L THD, STL, 150 LB, CO-033-51, R. H. THREAD ON ONE END, L. H. THREAD ON	$ 8.71	2
COUPLING, PIPE, 1IN, SW, STEEL, 2000 LB, ASTM A105	$ 28.39	16
COUPLING, PIPE, 1IN, THD, BLACK MALLEABLE IRON, 150 LB, CO-034-51	$ 158.96	111
COUPLING, PIPE, 2-1/2IN X 2IN, THD, BLACK MALLEABLE IRON, 150 LB, CO-035-51	$ 29.62	4
COUPLING, PIPE, 2IN IPS STEEL X 1-1/4IN IPS PLASTIC, COMPRESSION, BLACK MALLEABLE IRON, 150 LB LB, ASTM A402, SDR 10 POLYETHYLENE	$ 107.16	4
COUPLING, PIPE, 2IN IPS X 1-1/4IN IPS, ELECTROFUSION, POLYETHLENE, ASTM F1055, PE 2406 GR, 80# @ 73.4 DEGREES F	$ 152.70	15
COUPLING, PIPE, 2IN IPS X 15-3/4IN LG, STAB, PE 3408, ASTM D-2513, GAS GRADE POLYETHYLENE GR, REPAIR, SDR 11	$ 332.75	5
COUPLING, PIPE, 2IN IPS, ELECTROFUSION, POLYETHLENE, ASTM F1055, PE 2406 GR, 80# @ 73.4 DEGREES F	$ 1,227.46	274
COUPLING, PIPE, 2IN IPS, STAB, PE 3408, ASTM D2513, GAS GRADE POLYETHYLENE GR, SDR 11	$ 725.50	21
COUPLING, PIPE, 2IN X 1-1/2IN, THD, BLACK MALLEABLE IRON, 150 LB, CO-035-51	$ 39.20	10
COUPLING, PIPE, 2IN X 1-1/4IN, BOLTED, STL OR PE PIPE, 7IN CENTER RING	$ 121.53	2
COUPLING, PIPE, 2IN X 1-1/4IN, THD, BLACK MALLEABLE IRON, 150 LB, CO-035-51	$ 76.34	17
COUPLING, PIPE, 2IN X 1IN, COMPRESSION, CARBON STEEL, 150 LB	$ 446.85	8
COUPLING, PIPE, 2IN X 1IN, THD, BLACK MALLEABLE IRON, 150 LB, CO-035-51	$ 93.43	22
COUPLING, PIPE, 2IN X 5IN, COMPRESSION, MALLEABLE IRON OR FORGED STEEL BODY, W/ARMORED OR BEAD TIPPED GASKET AND LOCK NUTS	$ 105.88	4
COUPLING, PIPE, 2IN, BOLTED, CARBON STEEL, CONDUCTIVE, F/2.375IN STL PIPE, 7IN CENTER RING	$ 33.74	1
COUPLING, PIPE, 2IN, BOLTED, CARBON STL, 1 GR, F/2.375IN STL PIPE, INSULATING, 5IN CENTER RING	$ 44.63	1
COUPLING, PIPE, 2IN, BOLTED, FORGED STEEL, 1 GR, W/STIFFENERS, 7IN CENTER RING	$ 2,486.40	51
COUPLING, PIPE, 2IN, COMPRESSION, BRASS, 90 LB	$ 123.13	2
COUPLING, PIPE, 2IN, SOLDER, WROUGHT COPPER, COPPER TO COPPER COUPLING	$ 2.48	1
COUPLING, PIPE, 2IN, THD, BLACK MALLEABLE IRON, 150 LB, CO-034-51	$ 358.75	96
COUPLING, PIPE, 3/4IN COPPER X 1/2IN PE, COMPRESSION, BRASS, LOCK STIFFENER FOR PLASTIC END	$ 1,684.00	59
COUPLING, PIPE, 3/4IN IPS X 1IN CTS, STAB, POLYETHYLENE PE 3408, ASTM D-2513, ASTM D-3350	$ 258.55	33
COUPLING, PIPE, 3/4IN X 1/2IN, THD, BLACK MALLEABLE IRON, 150 LB, CO-035-51	$ 58.41	48
COUPLING, PIPE, 3/4IN X 3/8IN, THD, BLACK MALLEABLE IRON, 150 LB, CO-035-51	$ 17.20	14
COUPLING, PIPE, 3/4IN, COMPRESSION, BRASS, 100 LB, WITH BEAD TIPPED GASKET, F/COPPER	$ 970.04	35
COUPLING, PIPE, 3/4IN, SW, CARBON STEEL, 3000 LB, ASTM A105	$ 38.15	24
COUPLING, PIPE, 3/4IN, THD, BLACK MALLEABLE IRON, 150 LB, CO-034-51	$ 185.90	169
COUPLING, PIPE, 3/8IN X 1/4IN, NPT, BLACK MALLEABLE IRON, 150 LB, CO-035-51	$ 17.34	16
COUPLING, PIPE, 3IN (3.66IN X 3.50IN), BOLTED, FORGED STEEL, 1 GR, CAST IRON TO STEEL, 5IN CENTER RING	$ 133.39	1
COUPLING, PIPE, 3IN (3.80IN X 3.50IN), BOLTED, CARBON STEEL, 1 GR, CAST IRON TO STEEL	$ 411.36	4
COUPLING, PIPE, 3IN IPS SDR 11/11.5, MECHANICAL, POLYETHYLENE, ASTM D-2513, PE 3408 GR, PE TO PE W/2 ST, 84 PSIG	$ 109.29	1
COUPLING, PIPE, 3IN IPS, ELECTROFUSION, POLYETHLENE, ASTM F1055, PE 2406 GR, 76# @ 73.4 DEGREES F	$ 978.34	60
COUPLING, PIPE, 3IN STEEL TO 3IN SDR, COMPRESSION, STEEL, STEEL TO PLASTIC, 711 COUPLING, W/1 STIFFENER	$ 1,407.32	19
COUPLING, PIPE, 3IN X 2IN (3.500IN X 2.500 O.D.), BOLTED, FORGED STEEL, EZ MAXIGRIP RESTRAINT, 7IN CENTER RING	$ 416.18	5
COUPLING, PIPE, 4IN IPS SDR 11/11.5, MECHANICAL PE TO PE, POLYETHYLENE, ASTM D-2513, PE 3408 GR, 2 STIFFENERS INCLUDED, 76 PSIG	$ 4,509.55	41
COUPLING, PIPE, 4IN IPS, ELECTROFUSION, POLYETHLENE, ASTM F1055, PE 2406 GR, 76# @ 73.4 DEGREES F	$ 4,483.67	282
COUPLING, PIPE, 4IN STEEL AND POLYETHYLENE, BOLTED, CARBON STEEL, 711 COUPLING, W/1 STIFFENER	$ 13,697.93	151
COUPLING, PIPE, 4IN X 2IN (4.500IN O.D. X 2.500IN O.D.), BOLTED, CARBON STEEL, EZ MAXIGRIP RESTRAINT, 7IN CENTER RING	$ 624.11	6
COUPLING, PIPE, 4IN X 2IN REDUCER, BOLTED, CARBON STEEL, 4IN CI, 4.80IN OD X 2IN SDR11 2.375IN OD	$ 518.35	5
COUPLING, PIPE, 4IN X 3IN (4.500IN O.D. X 3.500IN O.D.), BOLTED, CARBON STEEL, EZ MAXIGRIP RESTRAINT, 7IN CENTER RING	$ 250.65	3
COUPLING, PIPE, 4IN, BOLTED, CARBON STEEL, 4IN C.I. X 4IN PLASTIC,	$ 1,168.16	8
COUPLING, PIPE, 4IN, BOLTED, CARBON STEEL, INSULATING, F/4.50IN STL PIPE, 7IN CENTER RING	$ 285.12	5
COUPLING, PIPE, 4IN, BOLTED, CARBON STEEL, STEEL TO STEEL, NON INSULATING, W/GASKETS	$ 80.16	2
COUPLING, PIPE, 5.00 O.D.CAST IRON X 4.5 PE, COMPRESSION, STEEL, 50 PSIG	$ 1,393.09	5
COUPLING, PIPE, 6IN CI 6.90IN X 6IN (SDR 13.5 6.625IN), BOLTED, CARBON STEEL, EZ MAXIGRIP RESTRAINT, INSULATING,	$ 173.83	1
COUPLING, PIPE, 6IN IPS SDR 13.5, MECHANICAL, POLYETHYLENE, ASTM D-2513, PE 3408 GR, 2 STIFFENERS INCLUDED	$ 1,172.67	3
COUPLING, PIPE, 6IN X 4IN (6.625IN O.D. X 4.500IN O.D.), BOLTED, CARBON STEEL, EZ MAXIGRIP RESTRAINT, 7IN CENTER RING	$ 2,713.58	18
COUPLING, PIPE, 6IN, BOLTED, CARBON STEEL, EZ MAXIGRIP RESTRAINT, 711 POSI-HOLD	$ 8,419.78	70
COUPLING, PIPE, 6IN, BOLTED, CARBON STEEL, STEEL TO STEEL, NON INSULATING, W/GASKETS	$ 476.62	6
COUPLING, PIPE, 6IN, BOLTED, CARBON STL, INSULATING, F/6.625IN STL PIPE, 5IN CENTER RING	$ 221.74	2
COUPLING, PIPE, 6IN, ELECTROFUSION, POLYETHYLENE	$ 6,837.65	183
COUPLING, PIPE, 7.10IN O.D.CAST IRON X 6IN PE, COMPRESSION, STEEL, 6IN CAST IRON TO PLASTIC, 50 PSIG	$ 433.98	1
COUPLING, PIPE, 8" IPS X 6" IPS, STL OR PE PIPE, BOLTED COMPRESSION, RESTRAINING, NON-INSULATION, CARBON STEEL, 150 PSIG WOG LB, ASTM D2513,	$ 2,424.48	12
COUPLING, PIPE, 8IN (9.05IN X 8.625IN), BOLTED, CARBON STEEL, 1 GR, CAST IRON TO STEEL, 7IN CENTER RING	$ 140.79	1
COUPLING, PIPE, 8IN CI (9.05IN OD) X 8IN IPS STL OR PE, BOLTED COMPRESSION, RESTRAINING, INSULATING, CARBON STEEL, 50 PSIG LB, ASTM D2513	$ 1,118.44	3

Inventory Provided by Affiliate to Duke Energy Kentucky
For the Year Ended December 31, 2008

COMPANY_SOL	CATALOG_DESC	Values Sum of SumOfTRANS_AMT	Sum of SumOfTRANS_QTY
	COUPLING, PIPE, 8IN IPS X 8IN IPS, BOLTED COMPRESSION, RESTRAINING, CONDUCTIVE, EPOXY COATED CARB STL, 150 PSIG LB, ASTM D2513, CFR 49 PART	$ 7,322.56	34
	COUPLING, PIPE, 8IN IPS X 8IN IPS, SDR 13.5 PE, BOLTED COMPRESSION, PE AND SS, NON-CORROSIVE, ASTM D-2513, CFR49 PART 192, PE 3408 GR	$ 1,839.89	3
	COUPLING, PIPE, 8IN, BOLTED, CARBON STEEL, CONDUCTIVE, STEEL TO STEEL, 5IN CENTER RING	$ 1,127.51	11
	COUPLING, PIPE, 8IN, BOLTED, CARBON STEEL, INSULATING, 7IN CENTER RING	$ 138.58	1
	COUPLING, PIPE, 8IN, ELECTROFUSION, POLYETHLENE, 64# @ 73.4 DEGREES F LB, ASTM F 1055, PE 2406 GR, PRODUCT CODE AE06-20	$ 9,350.14	167
	COUPLING, SHAFT, HALF, DRIVE, 3.498IN, 5IN, 4-1/4IN, CARBON STEEL, CONSISTS OF - (1) 3-1/2H FHUBX3.498, (1) 3-1/2	$ -	0
	COUPLING, SOLDER JOINT, 3/4IN, SOLDER, WROUGHT COPPER	$ 5.40	10
	COVER, 7.630 LG, 3.375 DEEP, BLACK PLASTISOL, F/6 HOLE SECONDARY CONNECTOR 500-10 RANGE,	$ 177.85	84
	COVER, CLOSER, GALV STEEL	$ 20.58	3
	COVER, CONDUIT OUTLET BODY, BLANK, FORM 7, 1IN, FERALOY	$ 411.01	100
	COVER, ELECTRICAL BOX, CLOSER, 3/4IN X 1IN, GALV STEEL, SMALL KNOCK OUT	$ 186.24	36
	COVER, FIRE EXTINGUISHER, NYLON	$ 17.43	1
	COVER, HANDHOLE, STREET LIGHT, 5-1/8IN WD X, FIBERGLASS, W/HARDWARE, BLACK	$ 50.00	2
	COVER, METER SOCKET, POLYCARBONATE, BLADED BLANK	$ 224.58	197
	COVER, METER, 7IN DIA X 6IN TALL, POLYCARBONATE PLASTIC, GRAY W/CLEAR LEXAN READ WINDOW	$ 432.00	16
	COVER, NATURAL GAS PIPELINE MARKER, 18IN ID X 3.5IN OD, POLYETHYLENE, POLY-DOME	$ 318.78	63
	COVER, REFRACTOR, 11-9/16IN WD X 14IN LG X 7IN HT, ACRYLIC	$ 154.52	4
	COVER, SECONDARY, SPLICE BOX, 22IN X 14-1/2IN X 3/4IN, POLYETHYLENE, HANDHOLD	$ 209.04	8
	COVER, SHOE, LOW TOP, SKID RESISTANT SOLES	$ 61.38	135
	CRAYON, LUMBER, MARKING, YELLOW	$ 11.70	24
	CRIMPER, PLASTIC PIPE 1/2IN-2IN, W/GROUND ROD (C615-H15)	$ 13,648.00	16
	CROSSARM, POLE, 3-1/2IN X 4-1/2IN, 8FT LG, SOL FIR OR PINE, PENTACHLOROPHENOL TREATED, (6) PIN, 11/16IN HOLES,W/(2) 7/16IN DIA,	$ 10,274.75	531
	CROSSARM, POLE, 3-3/4IN X 4-3/4IN, 10FT LG, SOL FIR OR PINE, PENTACHLOROPHENOL TREATED, 4-PIN, DIST XRM, STL PIN	$ 5,825.89	211
	CROSSARM, POLE, 6IN OR 7.5IN X 4IN, 10FT LG, FIBERGLASS, UV STABILIZED, FOAM FILL, BRACELESS (4-WIRE) DEADEND, 11/16IN PIN HOLES	$ 2,413.84	13
	CROSSARM, POLE, 6IN X 4IN, 10FT LG, FIBERGLASS, UV STABILIZED, FOAM FILL, BRACELESS (2-WIRE) DEADEND, 11/16IN PIN HOLES	$ 6,527.72	40
	CROSSARM, POLE, 6IN X 4IN, 8FT LG, FIBERGLASS, UV STABILIZED, FOAM FILL, BRACELESS (2-WIRE) DEADEND,11/16IN PIN HOLES	$ 14,739.04	113
	CUP, DRINKING, 3-1/2 OZ., PAPER, ROLLED BRIM, PLEATED, FLAT BOTTOM, 5000/CS	$ 340.46	150
	CUTOUT, FUSE, INTERCHANGEABE, NON-LOADBREAK, 200 A., 10,000 A., 15KV KV, 110KV B.I.L., W/LOADBUSTER HOOKS	$ 2,979.09	59
	CUTOUT, FUSE, LOADBUSTER HOOKS, 200A, 14.4 KV, POWER FUSE, SMD-20	$ 5,926.78	33
	CUTOUT, FUSE, NON-LOADBREAK, 100A, 10K, 15 KV, DROP-OUT OPEN,MEDIUM INTERRUPTING CAPACITY	$ 80,632.39	2,241
	CUTOUT, FUSE, NON-LOADBREAK, 400A, 14.4 KV, POWER FUSE, SMD-40, W/LOADBUSTER HOOKS	$ -	0
	CUTTER, BOLT, 24IN, CARBON STL, TUBULAR STL HANDLES, 3/8IN CAPACITY	$ 61.67	1
	CUTTER, BOLT,CENTER CUT, 38IN OAL, HARDENED ALLOY STEEL JAWS, STD PKG/1	$ 217.33	2
	CUTTER, COMPOUND RATCHET PLASTIC PIPE CUTTER, 1/8IN TO 2-3/8IN O.D., HARDENED STEEL BLADES, STD PKG/1	$ 356.20	3
	CUTTER, HEAVY DUTY PIPE, 3/4IN TO 2IN, PAINTED STEEL, STD PKG/1	$ 139.41	1
	CUTTER, PIPE, 2IN TO 4IN, STEEL	$ 547.48	1
	CUTTER, PIPE, 4IN TO 6IN, STEEL	$ 619.90	1
	CUTTER, PIPE, 5/8IN TO 2-1/8IN, PAINTED CAST ALUM	$ 100.11	2
	CUTTER, PIPE, 6IN TO 8IN, STEEL	$ 795.75	1
	CUTTER, PLASTIC TUBING, 1-7/8IN - 4-1/2IN, STEEL	$ 657.00	6
	CUTTER, RATCHET, 10IN LONG 1-1/4IN JAW OPENING OVER INSULATION, ASCR 350 MCM	$ 5,036.25	23
	CUTTER, SCISSOR ACTION, 1/8IN TO 1IN O.D., HARDENED STEEL BLADES	$ 630.95	44
	CUTTER, TUBING, 1/8IN TO 1-1/2IN POLYETHYLENE, STEEL	$ 262.58	19
	CUTTER, TUBING, 1/8IN TO 1IN, PAINTED CAST ALUM, STD PKG/1	$ 90.69	4
	CUTTER, WIRE, 10IN, 500/750KCM, RATCHET	$ 1,903.65	13
	CUTTER, WIRE, 28IN, 7/16IN DIA, STEEL, RATCHET	$ 401.36	1
	CUTTER, WIRE, CENTER CUT, 24IN, W/FIBERGLASS INSULATED HANDLES	$ 989.01	11
	CUTTER, WIRE, NARROW,SERRATED PLIER JAWS, 8 1/4IN LG.	$ 126.69	8
	DEADEND, GUY GRIP, 7 #9 COPPERWELD (11/32IN DIA.), 27IN LG, PREFORMED	$ 196.80	12
	DEADEND, AUTOMATIC CLEVIS, 4/0SOL CU, 3/0STR CU, GALV STEEL, END-TYPE LD AUTOMATIC DEAD END, W/GALVANIZED STEEL CLEVIS	$ 1,809.95	86
	DEADEND, AUTOMATIC, CLEVIS, #2SOL CU, #3SOL CU, #3STR CU, #5A CW, COPPER, TYPE LD W/GALV. STEEL CLEVIS	$ 683.37	55
	DEADEND, AUTOMATIC, CLEVIS, #3SOL CU,#4STR CU,#6A CW, COPPER	$ 16.09	3
	DEADEND, AUTOMATIC, CLEVIS, #4SOL CU, #6STR, #8A CW, COPPER, W/GALV STEEL CLEVIS	$ 501.44	83
	DEADEND, AUTOMATIC, CLEVIS, #6SOL CU, #8STR CU, COPPER, TYPE LD W/GALVANIZED STEEL CLEVIS	$ 87.67	18
	DEADEND, AUTOMATIC, CLEVIS, 2/0SOL CU, 1/0STR, #2A CW, GLAV STEEL, END TYPE LD AUTO DEAD END,W/GALV STL CLEVIS	$ 336.27	30
	DEADEND, AUTOMATIC, CLEVIS, 4/0STR CU, COPPER	$ 524.07	27
	DEADEND, AUTOMATIC, FLEX BAIL, #2SOL CU, #3SOL CU, #3STR CU, #5A CW, COPPER, W/FLEXIBLE BRONZE OR STAINLESS STEEL BAIL	$ 243.82	26

Inventory Provided by Affiliate to Duke Energy Kentucky
For the Year Ended December 31, 2008

COMPANY_SOL CATALOG_DESC	Values Sum of SumOfTRANS_AMT	Sum of SumOfTRANS_QTY
DEADEND, AUTOMATIC, FLEX BAIL, #4SOL CU, #6STR CU, #8A CW, COPPER, W/FLEXIBLE BRONZE OR STAINLESS STEEL BAIL	$ 285.33	43
DEADEND, AUTOMATIC, FLEX BAIL, 2/0SOL CU, 1/0STR CU, 2ACW, COPPER, TYPE FD, W/FLEXIBLE BRONZE OR SS BAIL	$ 463.64	20
DEADEND, COMPRESSION, 954 MCM 45X7 STRANDED ACSR, ALUM, TUBULAR, SINGLE TONGUE, ONE DIE REPLACEMENT	$ 587.22	6
DEADEND, GUY GRIP, 5/16IN DIA, GALV STL, 31IN LG, PREFORMED, B-COAT GALV, COLORCODE-BLK	$ 3,536.73	2,181
DEADEND, GUY GRIP, 7 STRAND, GALVANIZED WIRE, PREFORMED, 7/16IN DIA X 38IN LG	$ 75.92	26
DEADEND, PREFORMED DISTRIBUTION GRIP, 1/0 ACSR 6/1 STRANDING AND 1/0 7 STRAND AAAC, COLOR CODED YELLOW, 26IN LONG	$ 458.68	237
DEADEND, PREFORMED GUY GRIP, 12.5 AWG, ALUM, 29IN LONG, COLOR CODED YELLOW	$ 124.00	50
DEADEND, PREFORMED GUY GRIP, 6M, ALUM, 24IN LG	$ 104.52	62
DEADEND, PREFORMED, #2 SOLID COPPER, MADE FROM SPOOL INSULATOR AND #2 TBWPMAD SOLID, COPPER WIRE-25IN LG END OF WIRE SKINNED BACK 2-1/2IN	$ 6,100.00	305
DEADEND, PREFORMED, #4/0 WP CU, NEOPRENE COATED ALUM, COLOR CODE - RED	$ 59.73	8
DEADEND, PREFORMED, 1/0 AWG, ALUM, TRIPLEX W/BARE NEUTRAL	$ 1,026.82	1,031
DEADEND, PREFORMED, 1/0 AWG, SLACK SPAN, COLOR CODE YELLOW	$ 34.06	8
DEADEND, PREFORMED, 2 AWG AA, COPPER, TRIPLEX W/BARE NEUTRAL	$ 715.88	1,246
DEADEND, PREFORMED, 336.4 MCM COMPACT STRAND AAAC, NEOPRENE COATED ALUM ALLOY, 0.889IN-0.945IN OD, W/ 0.15IN INSULATION AND, 0.907IN OD AER	$ -	0
DEADEND, PREFORMED, 4 AWG AAA, ALUM, DUPLEX, W/BARE NEUTRAL	$ 226.24	434
DEADEND, PREFORMED, 4/0 AWG, ALUM, TRIPLEX W/BARE NEUTRAL	$ 66.94	50
DEADEND, PREFORMED, 4/0, 6/1 STRAND ACSR AND 246.7 KCMIL,, DISTRIBUTION GRIP, COLOR CODE-RED,34IN LG	$ 217.71	50
DEADEND, PREFORMED, 447 MCM 19 STRAND AAA 5005, ALUM, SLACK SPAN	$ 61.68	12
DEADEND, PREFORMED, 477 KCMIL 19 STRAND ALUM (1.071IN-1.138IN), ALUM, NEOPRENE COATED, 47IN LG, COLOR CODE -BLUE	$ 724.82	38
DEADEND, PREFORMED, 6 AWG AAA, ALUM, DUPLEX, W/BARE NEUTRAL	$ 74.95	156
DECAL, 1-3/4IN WD X 3IN LG, -, REFLECTIVE ON BLACK BACKGROUND, REFLECTIVE VINYL, STD PKG/25	$ 63.00	225
DECAL, 2-1/2IN, 0IN, YELLOW NUMBER ON BLACK BACKGROUND, 3M HI-INTENSITY	$ 63.28	226
DECAL, 2-1/2IN, 1IN, YELLOW NUMBER ON BLACK BACKGROUND, 3M HIGH-INTENSITY	$ 56.00	200
DECAL, 2-1/2IN, 2IN, YELLOW NUMBER ON BLACK BACKGROUND, 3M HIGH-INTENSITY	$ 56.00	200
DECAL, 2-1/2IN, 3IN, YELLOW NUMBER ON BLACK BACKGROUND, 3M HIGH-INTENSITY	$ 56.00	200
DECAL, 2-1/2IN, 4IN, YELLOW LETTERS ON BLACK BACKGROUND, SILICON TREATED VINYL, HI-INTENSITY, STD PKG/25	$ 56.00	200
DECAL, 2-1/2IN, 5IN, YELLOW LETTERS ON BLACK BACKGROUND, SILICON TREATED VINYL, HI-INTENSITY, STD PKG/25	$ 55.72	199
DECAL, 2-1/2IN, 6IN, YELLOW LETTERS ON BLACK BACKGROUND, SILICON TREATED VINYL, HI-INTENSITY, STD PKG/25	$ 56.00	200
DECAL, 2-1/2IN, 7IN, YELLOW LETTERS ON BLACK BACKGROUND, SILICON TREATED VINYL, HI-INTENSITY, STD PKG/25	$ 56.00	200
DECAL, 2-1/2IN, 8IN, YELLOW LETTERS ON BLACK BACKGROUND, SILICON TREATED VINYL, HI-INTENSITY, STD PKG/25	$ 53.76	192
DECAL, 2-1/2IN, 9IN, YELLOW LETTERS ON BLACK BACKGROUND, SILICON TREATED VINYL, HI-INTENSITY	$ 62.44	223
DECAL, 2-1/2IN, A, GOLD LETTERS ON BLACK BACKGROUND, VINYL, HI- INTENSITY, STD PKG/25	$ 77.56	277
DECAL, 2-1/2IN, B, YELLOW LETTERS ON, SILICON TREATED VINYL, 25 EA/PKG	$ 77.56	277
DECAL, 2-1/2IN, C, GOLD LETTERS ON BLACK BACKGROUND, VINYL, HI-INTENSITY	$ 78.96	282
DECAL, 2-1/2IN, D, GOLD LETTERS ON BLACK BACKGROUND, VINYL, STD PKG/25	$ 42.00	150
DECAL, 2-1/2IN, E, GOLD LETTERS ON BLACK BACKGROUND, VINYL, HI-INTENSITY	$ 42.00	150
DECAL, 2-1/2IN, F, GOLD LETTERS ON BLACK BACKGROUND, VINYL, HI-INTENSITY, STD PKG/25	$ 56.00	200
DECAL, 2-1/2IN, G, YELLOW LETTER ON BLACK BACKGROUND, 3-M HI-INTENSITY	$ 50.40	180
DECAL, 2-1/2IN, H, YELLOW LETTER ON BLACK BACKGROUND, 3M HI-INTENSITY	$ 56.36	200
DECAL, 2-1/2IN, I, YELLOW LETTER ON BLACK BACKGROUND, 3M HI-INTENSITY	$ 35.00	125
DECAL, 2-1/2IN, J, YELLOW LETTER ON BLACK BACKGROUND, 3M HI-INTENSITY	$ 38.05	125
DECAL, 2-1/2IN, K, YELLOW LETTER ON BLACK BACKGROUND, 3M HI-INTENSITY	$ 35.53	125
DECAL, 2-1/2IN, L, YELLOW LETTER ON BLACK BACKGROUND, 3M HIGH INTENSITY	$ 49.53	175
DECAL, 2-1/2IN, M, YELLOW LETTER ON BLACK BACKGROUND, 3M HI-INTENSITY	$ 49.22	175
DECAL, 2-1/2IN, N, YELLOW LETTER ON BLACKGROUND, 3M HI-INTENSITY	$ 49.37	176
DECAL, 2-1/2IN, O, YELLOW LETTER ON BLACK BACKGROUND, 3M HI-INTENSITY	$ 49.00	175
DECAL, 2-1/2IN, P, YELLOW LETTER ON BLACK BACKGROUND, 3M HIGH-INTENSITY	$ 49.07	175
DECAL, 2-1/2IN, Q, YELLOW LETTER ON BLACK BACKGROUND, 3M HI-INTENSITY	$ 35.01	125
DECAL, 2-1/2IN, R, YELLOW LETTER ON BLACK BACKGROUND, 3M HI-INTENSITY	$ 36.60	125
DECAL, 2-1/2IN, S, YELLOW LETTER ON BLACK BACKGROUND, 3M HI-INTENSITY	$ 35.00	125
DECAL, 2-1/2IN, T, YELLOW LETTER ON BLACK BACKGROUND, 3M HIGH-INTENSITY	$ 35.00	125
DECAL, 2-1/2IN, U, YELLOW LETTER ON BLACK BACKGROUND, 3M HI-INTENSITY	$ 35.00	125
DECAL, 2-1/2IN, V, YELLOW LETTER ON BLACK BACKGROUND, 3M HIGH-INTENSITY	$ 35.06	125
DECAL, 2-1/2IN, W, YELLOW LETTER ON BLACK BACKGROUND, 3M HI-INTENSITY	$ 35.12	125
DECAL, 2-1/2IN, X, YELLOW LETTER ON BLACK BACKGROUND, 3M HIGH-INTENSITY	$ 35.03	125
DECAL, 2-1/2IN, Y, YELLOW LETTER ON BLACK BACKGROUND, 3M HIGH-INTENSITY	$ 35.45	125
DECAL, 2-1/2IN, Z, YELLOW LETTER ON BLACK BACKGROUND, 3M HIGH-INTENSITY	$ 35.01	125

Inventory Provided by Affiliate to Duke Energy Kentucky
For the Year Ended December 31, 2008

COMPANY_SOL CATALOG_DESC	Values Sum of SumOfTRANS_AMT	Sum of SumOfTRANS_QTY
DEODORANT, SURFACE DISINFECTANT, LYSOL, FRESH SCENT, 19 OZ AEROSOL CAN, INSTITUTIONAL SIZE, 12/CS	$ 252.75	49
DEVICE, ULTRA-SONIC DOG DETERENT, RANGE - 20 FEET, W/BELT CLIP,, LOW BATTERY INDICATOR, AND 9V ENERGIZER BATTERY	$ 223.42	11
DIGGER, HAND, 8FT LG, W/SOLID HANDLE	$ 1,003.55	10
DIGGER, POST HOLE, 58-1/2IN LG, HERCULES 4FTLG HANDLE, 6IN WD BLADE, HINGED TYPE	$ 139.65	3
DISPENSER, C-FOLD PAPER TOWEL, WHITE ENAMEL STEEL	$ 38.33	1
DISPENSER, CUP, METAL, ADJUSTABLE	$ 43.41	3
DISPENSER, GUY WIRE, STEEL, 500FT ROLL, 7/16IN DISPOSABLE, GUY WIRE BASKET	$ 187.10	40
DRILL, HAND, HAND, BIT BRACE, 3/8 INCH CHCP, RATCHET ACTION, 10 INCH SWEEP	$ 14.95	1
DRILL, MASONRY, BIT, 1/4IN DIA	$ 4.74	6
DRIVER SET, NUT, 7 PIECE SET, 3/16IN, 1/2IN, 6-11/16IN, 7IN LG, HOLLOW, PLASTIC, BLOW MOLD BOX	$ 568.92	11
DRIVER, GROUND ROD	$ 524.06	3
DRIVER, NUT, 5/16IN, 6-11/16IN, HOLLOW, PLASTIC	$ 35.10	6
ELBOW, CONDUIT, INTERMEDIATE, 2IN, SW, PVC, 45 DEG, LONG RAD	$ 4.74	4
ELBOW, PIPE ADAPTER, 1-1/4IN MNPT X 1-1/4IN CTS, BRASS, 90 DEG, .090 WALL POLYETHYLENE	$ 63.30	1
ELBOW, PIPE ADAPTER, 1-1/4IN X 1IN, COMPRESSION INL, MNPT OUT, BRASS, 90 DEG, SHORT RAD, 1 GR, .099 WALL POLYETHYLENE	$ 534.30	18
ELBOW, PIPE ADAPTER, 1-1/4IN X 1IN, MNPT INL, COMPRESSION OUT, MALLEABLE IRON, 90 DEG, SHORT RAD, 1 GR	$ 347.80	18
ELBOW, PIPE ADAPTER, 1-1/4IN, COMPRESSION INL, MNPT OUT, FORGED MALLEABLE IRON, 90 DEG, 150 LB LB, SHORT RAD, UNIVERSAL STYLE 90 LOCK END	$ 523.53	21
ELBOW, PIPE ADAPTER, 1-1/4INMNPT X 1-1/4IN IPS, COMPRESSION INL, BLACK MALLEABLE IRON, 90 DEG, SDR 10 POLYETHYLENE	$ 1,500.00	50
ELBOW, PIPE ADAPTER, 1-1/4INMNPT X 1-1/4IN IPS, THD INL, COMPRESSION OUT, BRASS, 90 DEG, SDR 11 POLYETHYLENE	$ 1,572.63	25
ELBOW, PIPE ADAPTER, 1IN MNPT X 1IN CTS COMPRESSION, BRASS, .099 WALL POLYETHYLENE	$ 371.81	17
ELBOW, PIPE ADAPTER, 2IN, COMPRESSION INL, MNPT OUT, FORGED MALLEABLE IRON, 90 DEG, 150 LB LB	$ 31.47	1
ELBOW, PIPE ADAPTER, 3/4IN, MNPT INL, SWIVEL OUT, BLACK MALLEABLE IRON, 90 DEG, 150 LB, LONG RAD, 2.03 LONG	$ 734.48	300
ELBOW, PIPE REDUCER, 1-1/2 X 1-1/4, FPT, MALLABLE IRON, 90 DEG, SHORT RAD, CLASS 150	$ 226.60	58
ELBOW, PIPE REDUCER, 1-1/2IN X 1IN, FPT, MALLABLE IRON, 90 DEG, SHORT RAD, CLASS 150	$ 193.22	48
ELBOW, PIPE REDUCER, 1IN X 3/4IN, PLAIN THD, MALLABLE IRON, 90 DEG, SHORT RAD, CLASS 150	$ 138.51	81
ELBOW, PIPE REDUCER, 2-1/2IN X 1-1/2IN, THD, BLACK MALLEABLE IRON, 90 DEG, 150 LB, SHORT RAD, 2 GR	$ 50.40	4
ELBOW, PIPE REDUCER, 2-1/2IN X 2IN, THD, BLACK MALLEABLE IRON, 90 DEG, 150 LB, SHORT RAD, ANSI B 16.3	$ 159.61	11
ELBOW, PIPE REDUCER, 2IN X 1-1/2IN, THD, BLACK MALLEABLE IRON, 90 DEG, 150 LB, SHORT RAD	$ 91.85	16
ELBOW, PIPE REDUCER, 2IN X 1-1/4IN, THD, MALLABLE IRON, 90 DEG, SHORT RAD, CLASS150, PLAIN	$ 392.50	60
ELBOW, PIPE REDUCER, 2IN X 1IN, THD, BLACK MALLEABLE IRON, 90 DEG, 150 LB, SHORT RAD	$ 31.62	5
ELBOW, PIPE REDUCER, 2IN X 3/4IN, THD, BLACK MALLEABLE IRON, 90 DEG, 150 LB, SHORT RAD	$ 55.24	8
ELBOW, PIPE REDUCER, 3/4IN X 1/2IN, THD, BLACK MALLEABLE IRON, 90 DEG, 150 LB, SHORT RAD	$ 44.34	34
ELBOW, PIPE REDUCER, 4IN X 3IN, THD, BLACK MALLEABLE IRON, 90 DEG, 150 LB LB	$ 50.14	1
ELBOW, PIPE REDUCER, 8" X 4", BEVELED WELD ENDS, CARBON STL, 90 DEG, LONG (1.5R) RAD, ASTM A-234, ANSI B16.9, ASME SA234, GRADE B, STANDARD	$ -	0
ELBOW, PIPE, 1IN X 1/2IN, THD, BLACK MALLEABLE IRON, 90 DEG, EL-013-51, 150 PSIG WORKING PRESSURE	$ 41.79	24
ELBOW, PIPE, 1/2IN, THD, BLACK MALLEABLE IRON, 90 DEG, SHORT RAD, EL-012-51, 150 PSIG WORKING PRESSURE	$ 11.43	17
ELBOW, PIPE, 1/4IN, THD, BLACK MALLEABLE IRON, 45 DEG, SHORT RAD, EL-014-51, 150 PSIG WORKING PRESSURE	$ 14.23	12
ELBOW, PIPE, 1/4IN, THD, BLACK MALLEABLE IRON, 90 DEG, SHORT RAD, EL-012-51, 150 PSIG WORKING PRESSURE	$ 11.13	12
ELBOW, PIPE, 1/8IN, THD, BLACK MALLEABLE IRON, 90 DEG, SHORT RAD, EL-012-51, 150 PSIG WORKING PRESSURE	$ 9.28	12
ELBOW, PIPE, 1/8IN, THD, FORGED STEEL, 90 DEG, EXTRA HEAVY, 3000, SHORT RAD, EL-025-51	$ 40.08	12
ELBOW, PIPE, 1-1/2IN, THD, BLACK MALLEABLE IRON, 90 DEG, SHORT RAD, EL-012-51, 150 PSIG WORKING PRESSURE	$ 243.94	79
ELBOW, PIPE, 1-1/4IN IPS, STAB, POLYETHYLENE, MD, PE 3408, 099/102, 90 DEG, SHORT RAD, 90 PSI	$ 36.93	1
ELBOW, PIPE, 1-1/4IN X 1IN, FNPT, BLACK MALLEABLE IRON, 90 DEG, EL-013-51, 150 PSIG WORKING PRESSURE	$ 150.68	53
ELBOW, PIPE, 1-1/4IN X 3/4IN, THD, BLACK MALLEABLE IRON, 90 DEG, EL-013-51, 150 PSIG WORKING PRESSURE	$ 48.15	15
ELBOW, PIPE, 1-1/4IN, MNPT, BLACK MALLEABLE IRON, 90 DEG, 150, LONG RAD	$ 500.14	22
ELBOW, PIPE, 1-1/4IN, THD, BLACK MALLEABLE IRON, 90 DEG, SHORT RAD, EL-012-51, 150 PSIG WORKING PRESSURE	$ 99.32	44
ELBOW, PIPE, 12", WELD, BEVELED ENDS TO 0.250 WALL, CARB STEEL, 90 DEG, STD, LONG 3R RAD, ASTM A-234, ANSI B16.9, Y-42 GR, SEGMENTABLE, STD	$ 65,471.00	50
ELBOW, PIPE, 12IN IPS, BUTT FUSION, PE 2406, SDR 13.5, 45 DEG, STANDARD RAD, ASTM D2513 AND D 3261, MOLDED	$ 2,671.50	7
ELBOW, PIPE, 12IN IPS, BUTT FUSION, YELLOW MDPE, 90 DEG, STANDARD RAD, ASTM D2513, D3261, MOLDED	$ 1,191.63	3
ELBOW, PIPE, 12IN, BW, CARBON STEEL, 45 DEG, LONG RAD, ASTM A234, ANSI B16.9, B GR, SCH 20, 0.250IN WALL	$ 903.02	5
ELBOW, PIPE, 12IN, BW, CARBON STEEL, 90 DEG, LONG RAD, ASTM A234, ANSI B16.9, B GR, SCH 20, 0.250IN WALL	$ 679.44	2
ELBOW, PIPE, 12IN, WELD, BEVELED ENDS TO 0.250 WALL, CARBON STEEL, 45 DEG, STD, LONG 3R RAD, ASTM A-234, ANSI B16.9, Y-42 GR, SEGMENTABLE	$ 59,647.20	60
ELBOW, PIPE, 16IN, BW, CARBON STEEL, 45 DEG, SCH 20, 0.312 WALL, LR RAD, ASME SA 234, B GR	$ 2,737.16	5
ELBOW, PIPE, 1IN CTS, BUTT FUSION, PE 2406, 90 DEG, LONG RAD, ASTM D2513, ASTM D3261	$ 33.40	12
ELBOW, PIPE, 1IN, STAB, BLACK HIGH DENSITY POLYETHYLENE, 90 DEG	$ 1,726.53	168
ELBOW, PIPE, 1IN, SW, CARBON STEEL, 90 DEG, 3000, ASTM A105, ANSI B16	$ 4.08	1
ELBOW, PIPE, 1IN, SW, FORGED STEEL, 90 DEG, 3000, SHORT RAD	$ 625.85	189

Inventory Provided by Affiliate to Duke Energy Kentucky
For the Year Ended December 31, 2008

COMPANY_SOL CATALOG_DESC	Values Sum of SumOfTRANS_AMT	Sum of SumOfTRANS_QTY
ELBOW, PIPE, 1IN, THD, BLACK MALLEABLE IRON, 90 DEG, SHORT RAD, EL-012-51, 150 PSIG WORKING PRESSURE	$ 1,063.58	749
ELBOW, PIPE, 1IN, THD, FORGED STEEL, 90 DEG, EXTRA HEAVY, 3000, SHORT RAD, EL-025-51	$ 36.56	8
ELBOW, PIPE, 2IN, BUTT FUSION, PE 2406, 90 DEG, 80, ASTM 2513, SDR 11 GR, YELLOW CSA, IAPMO	$ 109.34	42
ELBOW, PIPE, 2IN, BW, STEEL, 45 DEG, LONG RAD, ASTM A234, ANSI B16.9, B GR, 0.154IN WALL	$ 11.65	2
ELBOW, PIPE, 2IN, BW, STEEL, 90 DEG, LONG RAD, ASTM A234, ANSI B16.9, B GR, 0.154IN WALL	$ 159.83	23
ELBOW, PIPE, 2IN, ELECTROFUSION, PE3408, 45 DEGREE DEG, 64 PSIG, ASTM D2513, MOLDED	$ 589.95	27
ELBOW, PIPE, 2IN, THD, BLACK MALLEABLE IRON, 45 DEG, SHORT RAD, EL-014-51, 150 PSIG WORKING PRESSURE	$ 23.44	6
ELBOW, PIPE, 2IN, THD, BLACK MALLEABLE IRON, 90 DEG, SHORT RAD, EL-012-51, 150 PSIG WORKING PRESSURE	$ 434.96	84
ELBOW, PIPE, 2IN, THD, FORGED STEEL, 90 DEG, EXTRA HEAVY, 3000, EL-025-51	$ 10.81	1
ELBOW, PIPE, 3/4IN, THD, BLACK MALLEABLE IRON, 45 DEG, SHORT RAD, ANSI B 16.3, EL-014-51, 150 PSIG WORKING PRESSURE	$ 2.51	2
ELBOW, PIPE, 3/4IN, THD, BLACK MALLEABLE IRON, 90 DEG, ANSI B 16.3, EL-012-51, 150 PSIG WORKING PRESSURE	$ 56.56	69
ELBOW, PIPE, 3/8IN, THD, BLACK MALLEABLE IRON, 90 DEG, SHORT RAD, EL-012-51, 150 PSIG WORKING PRESSURE	$ 16.66	24
ELBOW, PIPE, 3IN, BUTT FUSION, PE 2406, 45 DEG, STANDARD RAD, ASTM 2513, SDR11/11.5 GR, YELLOW	$ 71.88	12
ELBOW, PIPE, 3IN, BUTT FUSION, PE 2406, 90 DEG, 80, ASTM 2513, SDR11/11.5 GR, YELLOW, IAPMO	$ 72.92	12
ELBOW, PIPE, 3IN, BW, STEEL, 45 DEG, SHORT RAD, ASTM A234, ANSI B16.9, B GR, 0.216IN WALL	$ 8.97	2
ELBOW, PIPE, 3IN, BW, STEEL, 90 DEG, LONG RAD, ASTM A234, ANSI B16.9, B GR, 0.216IN WALL	$ 51.30	5
ELBOW, PIPE, 3IN, BW, STEEL, 90 DEG, SHORT RAD, ASTM A234, ANSI B16.9, B GR, 0.216IN	$ 49.32	3
ELBOW, PIPE, 4IN, BUTT FUSION, PE 2406, 45 DEG, 80, ASTM 2513, SDR 11 GR, YELLOW CSA	$ 741.32	86
ELBOW, PIPE, 4IN, BUTT FUSION, PE 2406, 90 DEG, 80, ASTM 2513, SDR 11/11.5 GR, YELLOW CSA, IAPMO	$ 285.27	37
ELBOW, PIPE, 4IN, BW, STEEL, 45 DEG, SHORT RAD, ANSI B16.9, B GR	$ 331.74	22
ELBOW, PIPE, 4IN, BW, STEEL, 90 DEG, LONG RAD, ASTM A234, ANSI B16.9, B GR, 0.237IN WALL	$ 348.30	21
ELBOW, PIPE, 4IN, ELECTROFUSION, POLYETHYLENE, 45 DEG, ASTM D2513, D3350, F1055, BLACK PE100/3408	$ 2,311.50	46
ELBOW, PIPE, 4IN, PLAIN THD, BLACK MALLEABLE IRON, 90 DEG, LONG RAD, EL-012-51, 150 PSIG WORKING PRESSURE	$ 191.02	6
ELBOW, PIPE, 4IN, SW, STEEL, 90 DEG, SHORT RAD, ASTM A234, ANSI B16.9, B GR, 0.237IN WALL	$ 60.25	2
ELBOW, PIPE, 6IN IPS, BUTT FUSION, PE2406, 45 DEG, 64, ASTM 2513, SDR 13.5, 6500 YELLOW	$ 767.28	43
ELBOW, PIPE, 6IN IPS, BUTT FUSION, PE2406, 90 DEG, 64, ASTM 2513, SDR 13.5, 6500 YELLOW	$ 321.82	17
ELBOW, PIPE, 6IN, BW, STEEL, 45 DEG, LONG RAD, ANSI B16.9, ASTM A234, B GR, 0.280IN WALL	$ 946.25	32
ELBOW, PIPE, 6IN, BW, STEEL, 90 DEG, LONG RAD, ASTM A234, ANSI B16.9, B GR, 0.280IN	$ 998.15	27
ELBOW, PIPE, 6IN, BW, STEEL, 90 DEG, SHORT RAD, ASTM A234, ANSI B16.9, B GR, 0.280IN WALL	$ -	0
ELBOW, PIPE, 6IN, ELECTROFUSION, POLYETHELENE, 45 DEG, ASTM D2513, D3350, F1055, BLACK PE100/3408	$ 2,640.00	24
ELBOW, PIPE, 8IN, BUTT FUSION, PE 2406, 45 DEG, ASTM 2513, SDR 13.5, E 6500 YELLOW	$ 1,261.44	27
ELBOW, PIPE, 8IN, BUTT FUSION, PE 2406, 90 DEG, STANDARD RAD, ASTM, SDR 13.5, E 6500 YELLOW	$ 421.00	9
ELBOW, PIPE, 8IN, BW, STEEL, 45 DEG, ASTM A234, ANSI B16.9, B GR, SCH 20, 0.250IN WALL	$ 1,262.54	8
ELBOW, PIPE, 8IN, BW, STEEL, 90 DEG, LONG RAD, ASTM A234, ANSI B16.9, B GR, SCH 20, 0.250IN WALL	$ 145.39	1
ELBOW, PIPE, 8IN, ELECTROFUSION, BLACK PE100/3408, 45 DEG, ASTM D2513, D3350, F1055	$ 2,482.50	15
ELBOW, SOLDER JOINT, 2IN, SOLDER, WROUGHT COPPER, 90 DEG, SHORT RAD	$ 12.21	2
ELBOW, SOLDER JOINT, 3/4, SOLDER, WROUGHT COPPER, 90 DEG, SHORT RAD	$ 5.45	8
ELBOW, STREET, 1/2IN, MNPT INL, FNPT OUT, MALLABLE IRON, 90 DEG, 150 LB	$ 13.65	10
ELBOW, STREET, 1/4IN, FNPT INL, MNPT OUT, BLACK MALLEABLE IRON, 90 DEG, 150 LB, SHORT RAD	$ 120.00	83
ELBOW, STREET, 1/8IN, FNPT INL, MNPT OUT, MALLEABLE IRON, 90 DEG, 150 LB, LONG RAD	$ 53.33	40
ELBOW, STREET, 1-1/2IN X 1-1/4IN, FNPT INL, MNPT OUT, BLACK MALLEABLE IRON, 90 DEG, 150 LB	$ 45.50	7
ELBOW, STREET, 1-1/2IN, FNPT INL, MNPT OUT, BLACK MALLEABLE IRON, 90 DEG, 150 LB, SHORT RAD	$ 149.49	38
ELBOW, STREET, 1-1/4IN X 1IN, FNPT INL, MNPT OUT, BLACK MALLEABLE IRON, 90 DEG, 150 LB, ANSI B 16.3	$ 44.41	11
ELBOW, STREET, 1-1/4IN, FNPT INL, MNPT OUT, BLACK MALLEABLE IRON, 90 DEG, 150 LB	$ 110.28	37
ELBOW, STREET, 1-1/4IN, MNPT INL, COMPRESSION OUT, BLACK MALLEABLE IRON, 90 DEG, SHORT RAD, INSULATING	$ 1,008.00	40
ELBOW, STREET, 1IN MNPT X 1IN CTS, COMPRESSION OUT, BLACK MALLEABLE IRON, 90 DEG, .099 WALL	$ 830.54	48
ELBOW, STREET, 1IN X 3/4IN, 3/4IN MNPT INL, 1IN CTS COMPRESSION OUT, MALLEABLE IRON, 90 DEG, .099 WALL POLYETHYLENE	$ 297.21	13
ELBOW, STREET, 1IN X 3/4IN, 3/4IN MPT INL, 1IN FPT OUT, BLACK MALLEABLE, 90 DEG	$ 107.85	42
ELBOW, STREET, 1IN, MNPT INL, FNPT OUT, BLACK MALLEABLE IRON, 90 DEG, 150 LB, SHORT RAD	$ 563.39	284
ELBOW, STREET, 1IN, MNPT INL, FNPT OUT, MALLABLE IRON, 90 DEG, 150 LB, INSULOK	$ 12.24	1
ELBOW, STREET, 2IN, COMPRESSION INL, MNPT OUT, BLACK MALLEABLE IRON, 90 DEG, 150 LB, SDR 11 POLYETHYLENE	$ 1,105.71	22
ELBOW, STREET, 2IN, MNPT INL, COMPRESSION OUT, BRASS, 90 DEG, SDR 11 POLYETHYLENE	$ 1,959.08	21
ELBOW, STREET, 2IN, THD INL, THD OUT, BLACK MALLEABLE IRON, 90 DEG, 150 LB, SHORT RAD	$ 154.56	23
ELBOW, STREET, 3/4IN, FNPT INL, MNPT OUT, BLACK IRON, 45 DEG, SHORT RAD	$ 4.41	2
ELBOW, STREET, 3/4IN, FNPT INL, MNPT OUT, BLACK MALLEABLE IRON, 90 DEG, 150 LB, SHORT RAD	$ 25.20	18
ELBOW, STREET, 3/8IN, FNPT INL, MNPT OUT, BLACK MALLEABLE IRON, 90 DEG, 150 LB, SHORT RAD	$ 31.00	22
ELBOW, STREET, 3IN, MNPT INL, FNPT OUT, MALLABLE IRON, 90 DEG, 150 LB, LONG RAD	$ 129.50	6

Inventory Provided by Affiliate to Duke Energy Kentucky
For the Year Ended December 31, 2008

COMPANY_SOL CATALOG_DESC	Values Sum of SumOfTRANS_AMT	Sum of SumOfTRANS_QTY
ELBOW, STREET, 4IN, FNPT INL, MNPT OUT, MALLABLE IRON, 90 DEG, LONG RAD, CLASS 150	$ 125.58	4
ENCLOSURE, CLAM SHELL, 40IN HT X 64IN WD, FIBERGLASS, PINE GREEN	$ 10,272.00	6
ENCLOSURE, PRIMARY METER, 72IN HT X 48IN WD X 48IN DP, STEEL	$ 4,710.00	1
ENCLOSURE, RELIEF VALVE, 30IN WD X 18IN DP X 40IN HT, FIBERGLASS, PINE GREEN	$ 3,321.12	3
ENCLOSURE, SECTIONALIZING, 15KV OR 35KV, SINGLE PHASE NEMA, 38IN X 38IN, FIBERGLASS	$ 812.86	2
ENCLOSURE, SECTIONALIZING, 15KV, 3 PHASE NEMA, 60IN LG X 37IN W X 38IN H, FIBERGLASS	$ 11,317.13	19
EXTENSION, ANCHOR ROD, 3-1/2FT LG, GALV STEEL, 1-1/2IN SQ SHAFT TYPE SS	$ 384.24	12
EXTENSION, CURB BOX, OVERALL LENGTH 26IN/22IN USABLE, PLASTIC, BUFFALO THREADS ON BOTH ENDS-EXTERNAL/INTERNAL	$ 422.96	57
EXTENSION, SECONDARY RACK, 9IN LONG X 4IN WD, 9 GAUGE STEEL, W/ 5/8IN X 2IN CARRIAGE BOLT	$ 627.47	72
EXTENSION, TOOL, EXTENSION, 1/2IN DRV, 5IN, STEEL	$ 11.03	1
EXTENSION, TOOL, SOCKET, 1/2IN SQ, 2-1/2IN, CHROME PLATED STEEL, MALE AND FEMALE ENDS	$ 6.38	1
EXTENSION, TOOL, SOCKET, 1/2IN, 10IN, CHROME PLATED STEEL	$ 71.68	6
EXTENSION, TOOL, SOCKET, 3/8IN, 6IN, CHROME PLATED STEEL	$ 7.29	1
EXTRACTOR, SCREW, #10, FOR BOLTS 2 1/8 TO 2 1/2 OR REM. 1- 1/4 NIP	$ 140.28	4
EXTRACTOR, SCREW, #2	$ 1.97	2
EXTRACTOR, SCREW, #3	$ 3.94	2
EXTRACTOR, SCREW, #4	$ 2.58	2
EXTRACTOR, SCREW, #5	$ 2.87	2
EXTRACTOR, SCREW, #6	$ 10.83	3
EXTRACTOR, SCREW, #7	$ 28.96	5
EXTRACTOR, SCREW, #8	$ 43.45	5
EXTRACTOR, SCREW, #9 BOLT 1-3/4 TO 2-1/8, FOR REMOVING 1IN NIPPLES	$ 68.10	5
EXTRACTOR, SCREW, 1THRU 5(SET)	$ 60.00	10
EYE, EYELET, 3/4IN, MALLEABLE IRON, 18000 LB	$ 2,709.77	1,183
EYE, SOCKET, 13/16IN DIA, 27000 LB, GALV STEEL	$ 934.76	87
FILE, AMERICAN, 4 IN HAND, HALF ROUND ONE SIDE, FLAT OTHER, HALF RASP/HALF DOUBLE CUT FILE EACH SIDE, 1-1/16IN WD X 10IN LG X 11/32 THK	$ 75.52	8
FILE, AMERICAN, CHAINSAW, ROUND, 1/4IN X 8IN, M-32	$ 17.10	11
FILE, AMERICAN, FLAT MILL, RECTANGULAR, BASTARD, SINGLE CUT, 10IN LG, STD PKG/12	$ 83.35	17
FILE, AMERICAN, FLAT MILL, RECTANGULAR, BASTARD, SINGLE CUT, 6IN LG, STD PKG/12	$ 85.76	31
FILE, AMERICAN, FLEXIBLE MILL, RECTANGULAR, FINE, BODY, 14IN LG	$ 24.47	2
FILE, AMERICAN, HALF ROUND, BASTARD, DOUBLE CUT, 10IN, STD PKG/12	$ 53.74	6
FILE, AMERICAN, HALF ROUND, BASTARD, DOUBLE CUT, 12IN LG, STD PKG/6	$ 105.59	10
FILE, AMERICAN, HALF ROUND, BASTARD, DOUBLE CUT, 14IN LG, STD PKG/6	$ 239.99	17
FILE, AMERICAN, HALF ROUND, BASTARD, DOUBLE CUT, 6IN	$ 31.08	4
FILE, AMERICAN, HALF ROUND, BASTARD, DOUBLE CUT, 8IN, STD PKG/12	$ 69.03	11
FILE, AMERICAN, HORSE RASP, RECTANGULAR, RASP CUT ONE SIDE DOUBLE CUT ON OTHER, 14IN LG, DELTA TANGED	$ 239.89	14
FILE, AMERICAN, MILL, FLAT, BASTARD, SINGLE CUT, 12IN, STD PKG/6	$ 62.09	10
FILE, AMERICAN, MILL, FLAT, BASTARD, SINGLE CUT, 8IN, STD PKG/12	$ 39.49	13
FILE, AMERICAN, RAT TAIL, ROUND TAPER, BASTARD, DOUBLE CUT, 6IN LG, STD PKG/12	$ 12.40	4
FILE, AMERICAN, RAT TAIL, ROUND TAPER, BASTARD, DOUBLE CUT, 8IN LG, STD PKG/12	$ 19.48	5
FILE, AMERICAN, RAT TAIL, ROUND, BASTARD, DOUBLE CUT, 10IN LG, STD PKG/12	$ 34.23	7
FILE, AMERICAN, RAT TAIL, ROUND, BASTARD, DOUBLE CUT, 12IN LG, FOR ROUNDING OUT CIRCULAR OPENINGS	$ 78.86	10
FILE, AMERICAN, RAT TAIL, ROUND, BASTARD, DOUBLE CUT, 14IN LG, STD PKG/6	$ 23.85	3
FILE, AMERICAN, SQUARE, BASTARD, DOUBLE CUT, 8IN LG, STD PKG/12	$ 37.71	8
FILE, AMERICAN, TAPER SAW, DOUBLE EXTRA SLIM TAPER, 1/4IN WD X 7IN LG, FOR SAWS WITH 60 DEG ANGLE TEETH	$ 7.58	2
FILE, AMERICAN, WOOD RASP, FLAT, BASTARD, RASP SINGLE CUT EDGES, 14IN, FOR FAST REMOVAL OF SOFT MATERIAL	$ 45.60	4
FILE, AMERICAN, WOOD RASP, HALF ROUND, BASTARD, RASP, 14IN LG, FOR FAST REMOVAL OF MATERIAL ON CONCAVE SURFACE	$ 30.48	2
FILE, CHAINSAW, ROUND, 7/32IN DIA X 8IN, (M-31), SMOOTH CUT AND AMERICAN PATTERN	$ 16.59	7
FILE, CHAINSAW, ROUND, 5/32IN DIA X 6IN, SMOOTH CUT, AMERICAN PATTERN	$ 36.00	15
FILE, SWISS, PILLAR, RECTANGULAR, 2 CUT, DOUBLE CUT, 8IN LG	$ 28.44	3
FILTER, GAS INDICATOR, COTTON	$ 38.80	8
FILTER, SYRINGE, 1-1/4IN DIA, NY MEMBRANE, PP HOUSING, 20 MICRON, 100/BOX	$ 140.14	1
FIRST AID KIT, EMERGENCY CPR	$ 675.27	30
FIRST AID KIT, FIRST AID ITEM, 2 PER UNITZED BOX, WET PREP GREEN SOAP SPONGE	$ 0.76	1
FIRST AID KIT, INDUSTRIAL, 10 UNIT, PVP IODINE SWABS, 1IN ADHESIVE BANDAGES,	$ 446.05	18
FIRST AID KIT, INDUSTRIAL, 16 UNIT, PVP IODINE SWABS, 1IN ADHESIVE BANDAGES,	$ 369.96	12
FIRST AID, BANDAGE, BAND AID, 1IN X 3IN, ELASTIC, NON ADHERENT PAD, 16 PER PACK	$ 36.90	82

Inventory Provided by Affiliate to Duke Energy Kentucky
For the Year Ended December 31, 2008

COMPANY_SOL	CATALOG_DESC	Values Sum of SumOfTRANS_AMT	Sum of SumOfTRANS_QTY
	FIRST AID, BANDAGE, BURN DRESSING, 2IN X 6IN. NON ADHERENT DRESSING IN GEL	$ 5.45	2
	FIRST AID, BANDAGE, FINGERTIP, 1-3/4 X 2IN, NON ADHERENT PAD, 10 PER BOX	$ 49.73	44
	FIRST AID, BANDAGE, KNUCKLE, 1 1/2IN X 3IN, ELASTIC, NON ADHERENT PAD, 8 PER PACK	$ 40.58	64
	FIRST AID, BANDAGE, OFF CENTER COMPRESS, 4IN, NON ADHERENT PAD AND ADHESIVE STRIP STERILE	$ 27.37	30
	FIRST AID, BANDAGE, OFFCENTER COMPRESS, 2IN, NON STICK PAD, 4 PER PACK	$ 17.30	10
	FIRST AID, BANDAGE, STERILE BURN DRESSING, 2IN X 2IN	$ 112.48	37
	FIRST AID, BREATHER AND GLOVES	$ 34.79	7
	FIRST AID, IODINE SWAB, 1/2CC, 10 PER BOX	$ 92.04	52
	FIRST AID, MEDICATION, ALCOHOL PREP, PAD, 10 PER PK	$ 4.00	10
	FIRST AID, MEDICATION, BURN GEL, OINTMENT, 1/8 OZ PACKAGE	$ 33.33	66
	FIRST AID, MEDICATION, BURN, 4IN X 4IN DRESSING, TREATMENT PACK, GAUZE, TAPE	$ 37.35	12
	FIRST AID, MEDICATION, ICE KOLD	$ 8.70	15
	FIRST AID, MEDICATION, POISON IVY SCREEN, TOWELETTE, BOX	$ 137.46	58
	FIRST AID, MEDICATION, POISON PLANT, CREAM, 1/8 OZ FOIL PACKAGE, 6 PER PACKET	$ 40.60	28
	FIRST AID, MEDICATION, STING KILL, LIQUID, CRUSABLE AMPULE, 10 PER PK	$ 79.38	42
	FIRST AID, SKIN CONDITIONER, 5 OZ PLASTIC TUBE, HAND LOTION	$ 165.81	64
	FIRST AID, SUNBLOCK TOWELETTES, 5 PER/BX	$ 268.36	104
	FIRST AID, TRIPLE ANTIBIOTIC OINTMENT	$ 75.24	57
	FITTING, CONTROL CABLE, CONDUCTOR RANGE 0.375IN 0.5IN, ALUM, RAIN-TIGHT	$ 51.80	10
	FITTING, END FITTING, SML-20 END F/ DEAD FRONT SWITCH GEAR	$ 140.32	1
	FITTING, OUTLET, ELECTROFUSION BRANCH SADDLE, 4IN RUN, 4IN OUT, POLYETHELENE, ASTM D2513, D3350, F1055, BLACK PE100/3408	$ 360.68	7
	FITTING, OUTLET, ELECTROFUSION BRANCH SADDLE, 6IN RUN, 2IN OUT, BLACK PE100/3408, ASTM D2513, D3350, F1055	$ 140.71	2
	FITTING, OUTLET, ELECTROFUSION BRANCH SADDLE, 6IN RUN, 6IN OUT, POLYETHELENE, ASTM D2513, D3350, F1055, BLACK PE100/3408	$ 292.98	3
	FITTING, OUTLET, ELECTROFUSION BRANCH SADDLE, 8IN RUN, 2IN OUT, POLYETHELENE, ASTM D2513, D3350, D1055, BLACK PE100/3408	$ 144.00	2
	FITTING, OUTLET, ELECTROFUSION BRANCH SADDLE, 8IN RUN, 6IN OUT, POLYETHELENE, ASTM D2512, D3350, F1055, BLACK PE100/3408	$ 1,052.82	8
	FITTING, OUTLET, SOCKOLET, 4IN TO 3-1/2IN RUN, 2IN OUT, SW, CARBON STEEL, 3000 LB, ASTM A105, 2 GR	$ 65.18	12
	FITTING, OUTLET, THREADOLET, 10IN TO 6IN RUN, 1IN OUT, THD, CARBON STEEL, 3000 LB, ASTM A105	$ 74.65	20
	FITTING, OUTLET, THREADOLET, 10IN TO 8IN RUN, 2IN OUT, THD, CARBON STEEL, 3000 LB, ASTM A105	$ 67.51	10
	FITTING, OUTLET, THREADOLET, 12IN TO 10IN RUN, 2-1/2IN OUT, THD, CARBON STEEL, 3000 LB, ASTM A105	$ 223.46	10
	FITTING, OUTLET, THREADOLET, 12IN TO 6IN RUN, 3/4IN OUT, THD, CARBON STEEL, 3000 LB LB, ASTM A105	$ 144.81	45
	FITTING, OUTLET, THREADOLET, 14IN TO 12IN RUN, 3IN OUT, THD, CARBON STEEL, 3000 LB, ASTM A105	$ 103.36	4
	FITTING, OUTLET, THREADOLET, 18IN TO 10IN RUN, 1-1/4IN OUT, THD, CARBON STEEL, 3000 LB, ASTM A105	$ 144.94	25
	FITTING, OUTLET, THREADOLET, 2-1/2IN TO 2IN RUN, 3/4IN OUT, FNPT, CARBON STEEL, 3000 LB LB, ASTM A105	$ 115.97	36
	FITTING, OUTLET, THREADOLET, 2IN RUN, 1-1/2IN OUT, THD, CARBON STEEL, 3000 LB, ASTM A105	$ 45.27	8
	FITTING, OUTLET, THREADOLET, 2IN RUN, 1IN OUT, THD, CARBON STEEL, 3000 LB LB, ASTM A105	$ 45.13	12
	FITTING, OUTLET, THREADOLET, 2IN RUN, 2IN OUT, THD, CARBON STEEL, 3000 LB, ASTM A105	$ 31.63	4
	FITTING, OUTLET, THREADOLET, 3-1/2IN TO 3IN RUN, 1IN OUT, THD, CARBON STEEL, 3000 LB LB, ASTM A105	$ 89.11	24
	FITTING, OUTLET, THREADOLET, 36IN - 14IN RUN, 3/4 IN OUT, THD, CARBON STEEL, 3000 LB, ASTM 105	$ 13.43	4
	FITTING, OUTLET, THREADOLET, 36IN TO 1/2IN RUN, 1/4IN OUT, FNPT, CARBON STEEL, 3000 LB LB, ASTM A105, 2 GR	$ 38.38	11
	FITTING, OUTLET, THREADOLET, 4IN RUN, 3IN OUT, THD, CARBON STEEL, 3000 LB, ASTM A105	$ 109.12	3
	FITTING, OUTLET, THREADOLET, 4IN TO 3-1/2IN RUN, 1-1/2IN OUT, THD, CARBON STEEL, 3000 LB, ASTM A105	$ 190.46	32
	FITTING, OUTLET, THREADOLET, 4IN TO 3-1/2IN RUN, 2IN OUT, THD, CARBON STEEL, 3000 LB, ASTM A105	$ 91.18	12
	FITTING, OUTLET, THREADOLET, 5IN TO 3IN RUN, 3/4IN OUT, FNPT, CARBON STEEL, 3000 LB LB, ASTM A105	$ 314.36	98
	FITTING, OUTLET, THREADOLET, 5IN TO 4IN RUN, 1-1/4IN OUT, THD, CARBON STEEL, 3000 LB LB, ASTM A105	$ 149.85	26
	FITTING, OUTLET, THREADOLET, 5IN TO 4IN RUN, 1IN OUT, FNPT, CARBON STEEL, 3000 LB LB, ASTM A105	$ 67.30	18
	FITTING, OUTLET, THREADOLET, 6IN RUN, 2IN OUT, THD, CARBON STEEL	$ 108.48	16
	FITTING, OUTLET, THREADOLET, 6IN TO 5IN RUN, 1-1/2IN OUT, THD, CARBON STEEL, 3000 LB, ASTM A105	$ 96.19	17
	FITTING, OUTLET, THREADOLET, 6IN TO 5IN RUN, 3IN OUT, THD, CARBON STEEL, 3000 LB, ASTM A105	$ 164.46	6
	FITTING, OUTLET, THREADOLET, 8IN RUN, 2-1/2IN OUT, THD, CARBON STEEL, 3000 LB, ASTM A105	$ 157.66	7
	FITTING, OUTLET, THREADOLET, 8IN RUN, 3IN OUT, THD, CARBON STEEL, 3000 LB, ASTM A105	$ 206.39	8
	FITTING, OUTLET, THREADOLET, 8IN TO 3IN RUN, 1/2IN OUT, THD, CARBON STEEL, 3000 LB LB, ASTM A105	$ 82.20	31
	FITTING, OUTLET, THREADOLET, 8IN TO 6IN RUN, 1-1/4IN OUT, THD, CARBON STEEL, 3000 LB, ASTM A105	$ 134.76	22
	FITTING, OUTLET, WELDOLET, 10IN TO 8IN RUN, 2IN OUT, BW, CARBON STEEL, ASTM A105, 2 GR	$ 314.72	19
	FITTING, OUTLET, WELDOLET, 12IN RUN, 4IN OUT, BW, CARBON STEEL	$ 94.12	4
	FITTING, OUTLET, WELDOLET, 12IN RUN, 8IN OUT, BW, CARBON STEEL, SCH 20 LB, ASTM A105, 2 GR	$ 832.00	2
	FITTING, OUTLET, WELDOLET, 14IN TO 12IN RUN, 6IN OUT, BW, CARBON STEEL, ASTM A105, 2 GR	$ 65.23	1
	FITTING, OUTLET, WELDOLET, 16IN RUN, 8IN OUT, BW, CARBON STEEL, STD LB, ASTM A105	$ 305.00	2

Inventory Provided by Affiliate to Duke Energy Kentucky
For the Year Ended December 31, 2008

COMPANY_SOL CATALOG_DESC	Values Sum of SumOfTRANS_AMT	Sum of SumOfTRANS_QTY
FITTING, OUTLET, WELDOLET, 18IN TO 12IN RUN, 2IN OUT, BW, CARBON STEEL, ASTM A105, 2 GR	$ 14.18	2
FITTING, OUTLET, WELDOLET, 2IN RUN, 2IN OUT, BW, CARBON STEEL, ASTM A105, 2 GR	$ 16.66	2
FITTING, OUTLET, WELDOLET, 3IN RUN, 2IN OUT, BW, CARBON STEEL, ASTM A105, 2 GR	$ 33.80	5
FITTING, OUTLET, WELDOLET, 4IN RUN, 4IN OUT, BW, CARBON STEEL, ASTM A105, 2 GR	$ 113.32	5
FITTING, OUTLET, WELDOLET, 4IN TO 3-1/2IN RUN, 2IN OUT, BW, CARBON STEEL, ASTM A105, 2 GR	$ 14.65	3
FITTING, OUTLET, WELDOLET, 6IN RUN, 2IN OUT, BUTT WELD, CARBON STEEL	$ 29.08	4
FITTING, OUTLET, WELDOLET, 6IN RUN, 4IN OUT, BW, CARBON STEEL, ASTM A105, 2 GR	$ 115.31	5
FITTING, OUTLET, WELDOLET, 6IN RUN, 6IN OUT, BW, CARBON STEEL, ASTM A105, 2 GR	$ 505.70	8
FITTING, OUTLET, WELDOLET, 8IN RUN, 3IN OUT, BW, CARBON STEEL, ASTM A105, 2 GR	$ 18.24	1
FITTING, OUTLET, WELDOLET, 8IN RUN, 4IN OUT, BW, CARBON STEEL, ASTM A105, 2 GR	$ 91.72	4
FITTING, OUTLET, WELDOLET, 8IN RUN, 6IN OUT, BW, CARBON STEEL, ASTM A105, 2 GR	$ 259.36	4
FITTING, OUTLET, WELDOLET, 8IN RUN, 8IN OUT, BW, CARBON STEEL, SCH 20 LB, ASTM A105, 2 GR	$ 432.00	1
FITTING, SHORTSTOPP(300D), 4IN, SS, 300 # RATING	$ 2,293.08	3
FITTING, SHORTSTOPP, 8IN, X-52, 0.375 WALL, SS, 300D SCARFED F/24IN PIPE, 720PSIG	$ 9,444.08	4
FITTING, SHORTSTOPP-SPLIT TEE(300D), 2IN, SS, 300 # RATING	$ 477.58	1
FITTING, SHORTSTOPP-TEE(300D), 6IN, SS, 300 # RATING	$ 2,398.00	2
FITTING, SHORTSTOPP-TEE(300D), 8IN, SS, 300 # RATING	$ -	0
FITTING, SHORTSTOPP-WELD(TYPE 11A), 12IN, SS, 150 # RATING	$ 7,229.89	5
FITTING, SHORTSTOPP-WELD(TYPE 11A), 4IN, SS, 150# RATING	$ 4,335.32	21
FITTING, SHORTSTOPP-WELD(TYPE 11A), 6IN, SS, 150 # RATING	$ 9,189.18	24
FITTING, SHORTSTOPP-WELD(TYPE 11A), 8IN, SS, 150 # RATING	$ 2,603.23	3
FITTING, SHORTSTOPP-WELD, 2IN, SS, CURVED BOTTOM, 150 # RATING	$ 331.72	10
FITTING, SHORTSTOPP-WELD, 3IN, SS, 150 # RATING	$ 119.37	2
FITTING, SHORTSTOPP-WELD, 6IN FL X 8IN RUN, SS, 150 # RATING	$ 1,992.16	4
FITTING, SHORTSTOPP-WELD, 8IN FL X 12IN RUN, SS, 150 # RATING	$ 3,294.09	3
FITTING, TRANSITION, 18IN IPS, PE 2406 POLYETHYLENE, SDR 13.5, BUTT FUSION INLET AND 8IN IRON COATED GRADE B	$ 273.63	1
FITTING, TRANSITION, 2IN, PE 2406 POLYETHYLENE SDR 11.0, BUTT FUSION INLET, 2IN PIPE SIZE, COATED GRADE B	$ 134.77	3
FITTING, TRANSITION, 3IN IPS, PE 2406, POLYETHYLENE, SDR 11.5, BUTT FUSION INLET AND 3IN IPS COATED GRADE B	$ 118.83	4
FITTING, TRANSITION, 4IN PIPE SIZE, PE 2406 POLYETHYLENE SDR 11.5, BUTT FUSION INLET AND 4IN IRON PIPE SIZE COATED	$ 240.26	2
FITTING, TRANSITION, 6IN IPS, PE 2406, POLYETHYLENE, SDR 13.5, BUTT FUSION INLET AND 6IN IPS COATED GRADE B	$ 198.68	1
FITTING, TRANSITION, 6IN IRON PIPE SIZE, PE 2406 POLYETHYLENE SDR 13.5, BUTT FUSION INLET AND 6IN IRON PIPE SIZE COATED	$ 2,075.08	14
FITTING, TRANSITION, 8IN IPS, PE 2406 POLYETHYLENE, SDR 13.5, BUTT FUSION, COATED GRADE B STEEL OUTLET W/	$ 342.22	1
FITTING, TRANSITION,, 4IN PIPE SIZE, PE 2406 POLYETHYLENE SDR 11.5, BUTT FUSION INLET AND 4IN IRON PIPE SIZE COATED	$ 1,421.03	30
FIXTURE, HID LIGHTING, AREA FLOOD, METAL HALIDE, 120/208/240/277VAC, 1KW, CONSTANT WATTAGE REGULATOR, POST TOP, 7X6 BEAM REFLECTOR,	$ 970.00	5
FIXTURE, HID LIGHTING, CH, TYPE III, CUTOFF, HPS, 120V, 100/150W DUAL, REAC-NPF, MAST ARM, FLAT GLASS, TWISTLOCK PHOTOCELL RECEPTACLE	$ 233.05	4
FIXTURE, HID LIGHTING, CH, TYPE III, CUTOFF, MH, 120V, MULTI-TAP, 175W, CWA, MAST ARM, FLAT LENS, TL PE RECPT., COBRAHEAD, FLAT LENS	$ 495.85	7
FIXTURE, HID LIGHTING, COBRAHEAD, TYPE II, CUTOFF, MH, 120V, MULTI-TAP, 250/400W DUAL, CWA, MAST ARM, FLAT LENS, TL PE RECPT.	$ 225.70	2
FIXTURE, HID LIGHTING, FLOODLIGHT, HPS, MT, WIRED 120V, 250/40OW DUAL, 400W READY, CWA, YOKE, CORD, 7FT LONG	$ 3,604.22	29
FIXTURE, HID LIGHTING, FLOODLIGHT, METAL HALIDE, MT, WIRED 120V, 250/400W, CWA, YOKE, 7X6 BEAM, BRONZE, 7 FT CORD	$ 1,516.62	12
FIXTURE, HID LIGHTING, GRANVILLE, BLACK, UTILITY BASE, MH, 120V, 175W, HFP CWA, POST TOP, 3IN TENON, TWISTLOCK PHOTOCELL, GLOBE NOT INCLUDED	$ 515.80	2
FIXTURE, HID LIGHTING, GRANVILLE, BLACK,, HPS, 120V, 100, HPF REACTOR, POST TOP, 3IN TENON, TWISTLOCK PHOTOCELL	$ 1,162.68	5
FIXTURE, HID LIGHTING, LUMINAIRE, HPS, 120VAC, 200W, REACTOR (AUTO LAG), MAST ARM	$ 423.69	6
FIXTURE, HID LIGHTING, OUTDOOR III DIST, HPS, 120V, 100W, REAC.-NPF, POST TOP, BLACK, 3IN TENON, TL PE RECEPT.	$ 4,491.56	23
FIXTURE, HID LIGHTING, OUTDOOR LUMINAIRE, HIGH PRESSURE SODIUM, 120V, 100W, HPF REACTOR, POST TOP	$ 3,874.57	5
FIXTURE, HID LIGHTING, OUTDOOR LUMINAIRE, METAL HALIDE, 120/208/240/277V,WIRED 120V, 175W, CWA, MULTI-TAP, MAST ARM, TYPE III DIST,TWISTLOCK	$ 3,936.92	63
FIXTURE, HID LIGHTING, OUTDOOR TYPE III DIST., METAL HALIDE, 120V, MULTI-TAP, 175W, CWA, POST TOP, BLACK, 3IN TENON, TL PE RECEPTACLE	$ 10,270.28	47
FIXTURE, HID LIGHTING, OUTDOOR, METAL HALIDE, 120/208/240/277, 250/400W, CWA, MULTI-TAP, WIRED 120V, MAST ARM, COBRAHEAD TYPE III DIST, DUEL	$ 2,804.29	30
FIXTURE, HID LIGHTING, RSL 350, BLACK, UTILITY BASE, HPS, 120V, 100W, HPF REACTOR, POST TOP, 3IN TENON, TWISTLOCK PHOTOCELL	$ 2,678.29	6
FIXTURE, HID LIGHTING, STREET, HPS, 120/208/240/277VAC (WIRED @ 120), 100W, HIGH POWER FACTOR, MAST ARM, 9500 LUMEN,W/MULTI TAP BALLAST, PHO	$ 251.80	1
FIXTURE, HID LIGHTING, STREET, HPS, 120V, 100/150W, REACTOR, NORMAL POWER FACTOR, MAST ARM, TYPE 2 LIGHT DISTRIBUTION, TWIST LOCK PHOTO	$ 5,291.57	108
FIXTURE, HID LIGHTING, STREET, HPS, 120V, 150W, REAC. NPF, POSTTOP, 3IN TENON, GASLIGHT REPLICA, TYPE III	$ 725.00	1
FIXTURE, HID LIGHTING, STREET, HPS, 120V, 250/400 W, CONSTANT WATTAGE, MAST ARM, TYPE 3 LIGHT DISTRUBUTION TWIST LOCK PHOTO	$ 2,379.25	25
FIXTURE, HID LIGHTING, STREET, HPS, 277VAC, 400W, HIGH POWER FACTOR, MAST ARM, 50,000 LUMEN, W/MILTI TAP BALLAST, PHOTOELECTRIC CONTROL REC	$ 246.76	1
FLAG, REFLECTIVE, 24IN X 24IN, 2/36IN STAFF AND WEIGHTED EDGES PLUS	$ 16.51	2
FLAG, TRAFFIC SIGNAL, 18IN WD X 18IN LG, CANVAS, ORANGE, W/ 3/4IN DIA X 24IN LG STICK,	$ 81.27	27
FLAG, TRAFFIC, 24IN X 24IN, VINYL, WITH WOOD STIFFENER AND 36IN WOOD STAFF	$ 154.50	50
FLANGE, CEILING, 1/4IN, GALV MALLEABLE IRON	$ 25.24	25

Inventory Provided by Affiliate to Duke Energy Kentucky
For the Year Ended December 31, 2008

COMPANY_SOL CATALOG_DESC	Values Sum of SumOfTRANS_AMT	Sum of SumOfTRANS_QTY
FLANGE, PIPE, FLAT FACE SLIP-ON, 6IN, 11IN OD, CARBON STEEL, 150 LB, ASTM A105, 8 HOLE	$ 73.76	4
FLANGE, PIPE, FLAT FACE THD, 2IN, 6IN OD, FORGED CARBON STEEL, 150 LB, ASTM A105, 2 GR	$ 1,612.84	122
FLANGE, PIPE, FLAT FACE THD, 4IN, 7.5IN OD, FORGED CARBON STEEL, 150 LB, ASTM A105	$ 63.24	4
FLANGE, PIPE, FLAT FACE WELD NECK, 2IN, 6-1/2IN OD, CARBON STEEL, 300 LB, ASTM A105	$ 332.33	19
FLANGE, PIPE, FLAT FACE WELD NECK, 4IN, 9IN OD, CARBON STEEL, 150 LB, ASTM A105	$ 108.05	5
FLANGE, PIPE, FLAT FACE WELD NECK, 8IN, 15IN OD, CARBON STEEL, 300 LB, ASTM A105	$ 76.79	1
FLANGE, PIPE, RAISED FACE BLIND, 2IN, 6-1/2IN OD, CARBON STEEL, 300 LB, ASTM A105	$ 240.91	18
FLANGE, PIPE, RAISED FACE BLIND, 3IN, 7-1/2IN OD, CARBON STEEL, 150 LB, ASTM A105	$ 27.24	2
FLANGE, PIPE, RAISED FACE BLIND, 3IN, 8-3/8IN OD, CARBON STEEL, 300 LB, ASTM A105	$ 45.46	2
FLANGE, PIPE, RAISED FACE BLIND, 4IN, 10IN OD, CARBON STEEL, 300 LB, ASTM A105	$ 427.40	13
FLANGE, PIPE, RAISED FACE BLIND, 4IN, 9IN OD, FORGED CARBON STEEL, 150 LB, ASTM A105	$ 62.06	3
FLANGE, PIPE, RAISED FACE BLIND, 6IN, 12-1/2IN OD, CARBON STEEL, 300 LB, ASTM A105	$ 98.35	2
FLANGE, PIPE, RAISED FACE SLIP-ON, 2IN, 6-1/2IN OD, CARBON STEEL, 300 LB, ASTM A105	$ 209.55	15
FLANGE, PIPE, RAISED FACE SLIP-ON, 2IN, 6IN OD, CARBON STEEL, 150 LB, ASTM A105, 4 HOLE	$ 17.62	2
FLANGE, PIPE, RAISED FACE SLIP-ON, 4IN, 10IN OD, CARBON STEEL, 300 LB, ASTM A105, 8 HOLE	$ 352.24	12
FLANGE, PIPE, RAISED FACE SLIP-ON, 4IN, 9IN OD, CARBON STEEL, 150 LB, ASTM A105	$ 76.25	5
FLANGE, PIPE, RAISED FACE THD REDUCING, 2IN FL, 1-1/2IN THD OD, CARBON STEEL, 150 LB, ASTM A105	$ 813.38	30
FLANGE, PIPE, RAISED FACE THD, 3IN, 7-1/2IN OD, FORGED CARBON STEEL, 150 LB, ASTM A105	$ 97.98	6
FLANGE, PIPE, RAISED FACE WELD NECK, 2IN, 6IN OD, CARBON STEEL, 150 LB, ASTM A105	$ 273.07	20
FLANGE, PIPE, RAISED FACE WELD NECK, 4IN, 10IN OD, CARBON STEEL, 300 LB, ASTM A105, WPB GR	$ 73.04	2
FLANGE, PIPE, RAISED FACE WELD NECK, 6IN, 11IN OD, CARBON STEEL, 150 LB, ASTM A105	$ 123.30	4
FLANGE, PIPE, SLIP-ON, 3IN, 7-1/2IN OD, FORGED CARBON STEEL, 150 LB	$ 36.60	3
FLANGE, PIPE, SLIP-ON, 8IN, 15IN OD, FORGED STEEL, 300 LB	$ 192.18	3
FLANGE, PIPE, THD, 4IN, 9IN OD, CARBON STEEL, 150 LB, ASTM A105	$ 19.27	1
FLARE, EMERGENCY, RED, 30 MINUTE, W/ WIRE HOLDER	$ 84.20	36
FLARE, HIGH VISIBILTY, PORTABLE, AMBER STROBE LIGHT, 80 HOURS, IMPACT RESITSTNET ABS PLASTIC	$ 707.88	30
FLASHLIGHT, 2, AAA, MITY-LITE, STD PKG - 12 PER/CT	$ 153.54	18
FLASHLIGHT, 2, D, INDUSTRIAL, BLACK - IMPRINTED - PROPERTY OF	$ 3.37	1
FLASHLIGHT, 2, D, W/CONTINUITY TESTER,PR-6 BULB,YELLOW	$ 64.09	6
FLASHLIGHT, 3, D, HVY DUTY INDUSTRIAL, BLACK PLASTIC CASE W/	$ 27.04	7
FLASHLIGHT, 3, D, KRYPTON BULB	$ 399.75	65
FLASHLIGHT, SINGLE, 6V, HEAVY DUTY INDUSTRIAL LANTERN	$ 13.54	2
FLUID, HYDRAULIC- BLACKHAWK JACK, 32 OZ BOTTLE	$ 26.60	6
FLUID, HYDRAULIC- FYRQUEL EHC, 55 GAL DRUM, ISO VG 48 CLEAR TRANSPARENT LIQUID	$ 13,205.50	220
FLUID, LENS CLEANING AND ANTI-FOGGING, AEROSOL CAN	$ 1.79	1
FLUID, STARTING, 16 OZ CAN, W/UPPER CYLINDER LUBRICANT ADDED	$ 11.11	6
FLUX, BRAZING, PASTE, 1/2 LB JAR	$ 29.17	7
FRAME, FACE SHIELD, PLASTIC, LESS VISOR	$ 8.23	1
FUNNEL, 12IN CENTER, GALV, 9 QT	$ 8.80	1
FUNNEL, 3IN DIA, GALV TIN	$ 20.32	7
FUNNEL, 5-1/2IN DIA, TIN, CAPACITY: 1.5 PTS, FLOW CAPACITY IS 1 QT	$ 23.10	7
FUSE, DUAL-ELEMENT, TIME-DELAY, 100 AMP, 250V, KNIFE BLADE, 1-1/16IN X 5-7/8IN	$ 299.90	50
FUSE, DUAL-ELEMENT, TIME-DELAY, 60 AMP, 250V, FERRULE, 13/16IN X 3IN, FD	$ 396.44	150
FUSE, FAST ACTING, 2 AMP, 250V, GLASS, FERRULE, 1/4IN X 1-1/4IN	$ 0.86	5
FUSE, FAST ACTING, 3 AMP, 250V, GLASS, FERRULE, 1/4IN X 1-1/4IN	$ 0.72	5
FUSE, FAST ACTING, 3 AMP, 600V, MELAMINE, FERRULE, 13/32IN X 1-1/2IN	$ 14.05	5
FUSE, FAST ACTING, 6 AMP, 250V, CERAMIC, FERRULE, 1/4IN X 1-1/4IN	$ 2.11	5
FUSE, LINK, 200 N SPEED, 175A, 15KV	$ 2,808.27	135
FUSE, LINK, BAY-O-NET, 100A, 2.4KV/14.4KV	$ 63.62	7
FUSE, LINK, BAY-O-NET, 15A, 2.4KV-14.4KV	$ 163.69	16
FUSE, LINK, BAY-O-NET, 15A, 2.4KV-14.4KV, FD	$ 40.62	4
FUSE, LINK, BAY-O-NET, 25A, 2.4KV/14.4KV	$ 30.97	3
FUSE, LINK, BAY-O-NET, 3A, 8.2KV-23KV	$ 136.41	13
FUSE, LINK, BAY-O-NET, 40A, 23000V AND BELOW	$ 72.38	8
FUSE, LINK, BAY-O-NET, 50A, 2.4KV-14.4KV	$ 26.51	2
FUSE, LINK, BAY-O-NET, 65A, 2.4KV/14.4KV	$ 51.68	5
FUSE, LINK, BAY-O-NET, 8A	$ 115.92	11

Inventory Provided by Affiliate to Duke Energy Kentucky
For the Year Ended December 31, 2008

COMPANY_SOL CATALOG_DESC	Values Sum of SumOfTRANS_AMT	Sum of SumOfTRANS_QTY
FUSE, LINK, D, 10A	$ 5,329.29	1,159
FUSE, LINK, D, 15A	$ 402.77	82
FUSE, LINK, D, 1A, 35KV	$ 70.68	16
FUSE, LINK, D, 20A	$ 371.23	78
FUSE, LINK, D, 4A, 15KV	$ 1,431.91	277
FUSE, LINK, D, 5A, 15KV	$ 5,460.57	1,131
FUSE, LINK, D, 7A, 15KV	$ 548.00	115
FUSE, LINK, K, 65A	$ 22.77	5
FUSE, LINK, STANDARD SPEED, 30A	$ 14.58	5
FUSE, LINK, STANDARD SPEED, 50A	$ 85.15	26
FUSE, LINK, STANDARD SPEED, 65A	$ 44.78	10
FUSE, LINK, STANDARD SPEED, 80A	$ 915.67	174
FUSE, LINK, T, 100A	$ 1,379.13	328
FUSE, LINK, T, 140A	$ 723.47	33
FUSE, LINK, T, 25A, FD	$ 502.13	209
FUSE, LINK, T, 40A	$ 674.67	287
FUSE, LINK, T, 65A	$ 3,881.36	785
FUSE, NON-CURRENT LIMITING, 1 AMP, 250V, FERRULE, 9/16IN X 2IN	$ 2.19	5
FUSE, NON-CURRENT LIMITING, 3 AMP, 250V, FERRULE, 9/16IN X 2IN	$ 2.90	5
FUSE, NON-CURRENT LIMITING, 30 AMP, 250V, FERRULE, 9/16IN X 2IN	$ 55.39	70
FUSE, NON-CURRENT LIMITING, 5 AMP, 250V, FERRULE, 9/16IN X 2IN	$ 2.88	5
FUSE, NON-CURRENT LIMITING, 6 AMP, 250V, FERRULE, 9/16IN X 2IN	$ 2.80	5
FUSE, REFILL SMD-20, 175E AMP, 14.4KV, SLOW SPEED	$ 689.29	7
FUSE, REFILL, 100E AMP, 14.4KV, SLOW SPEED	$ 1,941.14	21
FUSE, REFILL, 125E AMP, 14.4KV, SLOW SPEED	$ 1,140.63	12
FUSE, REFILL, 125E AMP, 14.4KV, STANDARD SPEED, F/SM-4	$ 1,054.39	9
FUSE, REFILL, 200E AMP, 14.4KV, TYPE SM-4	$ 328.19	3
FUSE, REFILL, 250E AMP, 14.4KV, STANDARD SPEED	$ -	0
FUSE, REFILL, 250E AMP, 14.4KV, STANDARD SPEED, F/SM-5	$ 129.35	1
FUSE, REFILL, 300E AMP, 14.4KV, STANDARD SPEED	$ 538.80	4
FUSE, REFILL, 65E AMP, 14.4KV, SLOW SPEED	$ 536.22	6
FUSE, TIME-DELAY, 10 AMP, 125V, FERRULE, 13/32IN X 1-1/2IN	$ 14.77	5
FUSE, TIME-DELAY, 10 AMP, 250V, CERAMIC, FERRULE, 1/4IN X 1-1/4IN	$ 3.21	5
FUSE, TIME-DELAY, 10 AMP, 250V, FIBER, FERRULE, 13/32IN X 1-1/2IN	$ 5.41	5
FUSE, TIME-DELAY, 5 AMP, 125V, FIBER, FERRULE, 13/32IN X 1-1/2IN	$ 204.76	40
GAS, 2.5% METHANE BALANCE AIR, CERTIFIED WITH ACTUAL METHANE CONTENT REPORT, CYLINDER SIZE 044	$ 130.54	1
GAS, PROPANE, 14.1 OZ, REFILL CYLINDER	$ 20.09	3
GASKET, ADAPTER, 1-1/4IN ID, 1-1/4IN OD, 1/16IN THK, BLACK NEOPRENE, ROUND	$ 8.94	2
GASKET, FLAT, 12IN, ANSI 150 FLANGE, 12-3/4IN ID, 16-1/8IN OD, 1/16IN THK, ARAMID FIBER W/ NITRILE BINDER, ROUND	$ 11.00	2
GASKET, FLAT, 2IN, ANSI 150 FLANGE, 2-3/8IN ID, 4-1/8IN OD, 1/16IN THK, ARAMID FIBER W/ NITRILE BINDER, ROUND	$ 71.40	238
GASKET, FLAT, 2IN, ANSI 300 FLANGE, 2-3/8IN ID, 4-3/8IN OD, 1/16IN THK, ARAMID FIBER W/ NITRILE BINDER, ROUND	$ 15.05	43
GASKET, FLAT, 3IN, ANSI 150 FLANGE, 3-1/2IN ID, 5-3/8IN OD, 1/16IN THK, ARAMID FIBER W/ NITRILE BINDER, ROUND	$ 61.97	105
GASKET, FLAT, 3IN, ANSI 300 FLANGE, 3-1/2IN ID, 5-7/8IN OD, 1/16IN THK, ARAMID FIBER W/ NITRILE BINDER, RD	$ 16.80	6
GASKET, FLAT, 4IN, ANSI 150 FLANGE, 4-1/2IN ID, 6-7/8IN OD, 1/16IN THK, ARAMID FIBER W/NITRILE BINDER, ROUND	$ 42.94	38
GASKET, FLAT, 4IN, ANSI 300 FLANGE, 4-1/2IN ID, 7IN OD, 1/16IN THK, ARAMID FIBERS W/ NITRILE BINDERS, ROUND, 300 LB	$ 29.76	32
GASKET, FLAT, 6IN, ANSI 150 FLANGE, 6-5/8IN ID, 8-3/4IN OD, 1/16IN THK, ARAMID FIBERS W/NITRILE BINDERS, ROUND	$ 9.82	4
GASKET, FLAT, 6IN, ANSI 300 FLANGE, 6-5/8IN ID, 9-7/8IN OD, 1/16IN THK, ARAMID FIBER W/NITRILE BINDER, ROUND	$ 41.73	13
GASKET, FLAT, 8IN, ANSI 150 FLANGE, 8-5/8IN ID, 11IN OD, 1/16IN THK, ARAMID FIBERS W/NITRILE BINDER, ROUND	$ 25.50	4
GASKET, FLAT, 8IN, ANSI 300 FLANGE, 8IN ID, 12IN OD, 1/16IN THK, ARAMID FIBER W/NITRILE BINDER, ROUND	$ 8.08	1
GASKET, GAS METER BAR, 1.046 ID, 1.740 OD, .109 THK, BUNA-N NEOPRENE, ROUND, FOR UNION END OF A.Y.MCDONALD METER BAR	$ 13.86	60
GASKET, HYDROVEYOR, 3IN ID, 4-3/4IN OD, 1/4IN THK, FOLDED TACKY CLOTH, OVAL	$ 3.13	1
GASKET, OPENING, 3IN ID, 5IN OD, 1/32IN THK, SOFT ANNEALED IRON, ROUND	$ 12.50	1
GATE, VALVE, 5IN ROTARY SLIDE TOTALLY ENCLOSED, 2-WAY, HIGH TEMP	$ 1,324.00	1
GAUGE, PRESSURE, TRIPLE PRESSURE ERX RECORDER, LCD DISPLAY, EXTERNAL RS-232 CASE, PORTABLE, ALKALINE RECEPTABLE BATTERY PACK	$ 1,707.00	1
GLASS, SIGHT, 3-1/2IN DIA X 1/4IN THK, PYREX, CLEAR	$ 99.60	8
GLASSES, SAFETY, BLACK FRAME VENTURE II, INDOOR/OUTDOOR LENS	$ 302.27	133
GLASSES, SAFETY, BLACK FRAME, CLEAR LENS	$ 139.26	66

Inventory Provided by Affiliate to Duke Energy Kentucky
For the Year Ended December 31, 2008

COMPANY_SOL CATALOG_DESC	Values Sum of SumOfTRANS_AMT	Sum of SumOfTRANS_QTY
GLASSES, SAFETY, CHEATERS, PLANO W/ 1.5 BI-FOCAL PWR, SMOKE GRAY, FIXED, WRAP AROUND LENS, PLASTIC AND POLYCARBONATE	$ 28.95	5
GLASSES, SAFETY, INDOOR/OUTDOOR, 9-BASE WRAP AROUND, 50% GRAY, RACHET TYPE, YES, PLASTIC/POLYCARBONATE, BLK FRAME	$ 215.67	39
GLASSES, SAFETY, INDOOR/OUTDOOR, PLANO, PYRAMEXZTEK, INTEGRATED, YES, POLYCARBONATE, WRAP AROUND	$ 25.34	14
GLASSES, SAFETY, ONE PIECE, YELLOW/GREEN, UNIVERSAL, CURVED LENS, BLACK FRAME, PLASTIC/POLYCARBONATE	$ 389.52	72
GLASSES, SAFETY, OVER THE GLASS, 3.0, INFRADURA TINT, BLACK FRAME	$ 7.05	1
GLASSES, SAFETY, OVER THE GLASSES, CLEAR, PATRIOT FRAME	$ 36.06	7
GLASSES, SAFETY, OVER THE GLASSES, GREY, PATRIOT FRAME	$ 16.23	3
GLASSES, SAFETY, PLANO SAFETY GLASSES, READER MAGNIFICATION 2.5, GRAY TINTED, STANDARD, ATTACHED, PLASTIC/POLYCARBONATE	$ 93.16	16
GLASSES, SAFETY, PLANO, 2.0 MAGNIFICATION, GRAY TINTED, STANDARD, ATTACHED, PLASTIC/POLYCARBONATE	$ 104.22	18
GLASSES, SAFETY, PLANO, ANTI FOG, ONE PIECE LENS, CLEAR, ADJUSTABLE, WRAP AROUND LENS, PLASTIC/POLYCARBONATE, ONE PIECE LENS	$ 5.57	1
GLASSES, SAFETY, PLANO, ONE PIECE LENS, SCST-GRAY, ADJ, WRAP AROUND, PLASTIC/POLYCARBONATE, ANTI FOG	$ 306.28	52
GLASSES, SAFETY, PLANO, WRAP AROUND LENS, DARK GRAY, RACHET TYPE, YES, BLACK FRAME, PLASTIC AND POLYCARBONATE	$ 530.88	96
GLASSES, SAFETY, PLANO, WRAP AROUND, CLEAR, RACHET TEMPLE LENGTH, YES, BLACK, PLASTIC/POLYCARBONATE FRAME	$ 4.98	1
GLASSES, SAFETY, READER, 1.5 W/MAGNIFYING AREA, CLEAR, WRAP AROUND STYLE, BLACK FRAME, W/MAGNIFYING AREA	$ 84.45	15
GLASSES, SAFETY, READER, 2.0. W/MAGNIFYING AREA, CLEAR, BLACK FRAME, W/MAGNIFYING AREA	$ 48.97	9
GLASSES, SAFETY, SAFETY GLASSES, GRAY ANTI FOG, UNIVERSAL, WRAP AROUND, BLK PLASTIC FRAMES AND POLYCARBONATE LENS	$ 1,028.10	345
GLASSES, SAFETY, SAFETY GLASSES, SMALL ANSI APPROVED, CLEAR, ADJUSTABLE, ATTACHED, PLASTIC AND POLYCARBONATE	$ 4.31	1
GLASSES, SAFETY, SAFETY GLASSES, SMALL ANSI APPROVED, EXSPRESSO, ADJUSTABLE, ATTACHED, PLASTIC AND POLYCARBONATE	$ 28.74	6
GLASSES, SAFETY, SAFETY GLASSES, WRAP AROUND, GRAY LENS, INTEGRATED, YES, POLYCARBONATE, W/SCRATCH COATING, ANTI-FOG LENS	$ 29.70	15
GLOVES, ASSEMBLY, WORK, 10, 10IN L, NITRILE FOAM, KNIT LINED, DIPPED, TAN, KNIT	$ 5.40	2
GLOVES, ASSEMBLY,, 8, 10IN L, NITRILE FOAM, KNIT LINED, DIPPED, CREAM, KNIT	$ 11.36	4
GLOVES, CUT RESISTANT, LARGE, 13 GAUGE RING SPUN DYNEEMA, POLYURETHANE, GREY SHELL/ BLACK PALM	$ 132.00	22
GLOVES, CUT RESISTANT, MEDIUM, 13 GAUGE RING SPUN DYNEEMA, POLYURETHANE, GREY SHELL/ BLACK PALM	$ 120.00	20
GLOVES, CUT RESISTANT, SMALL, 13 GAUGE RING SPUN DYNEEMA, POLYURETHANE, GREY SHELL/ BLACK PALM	$ 12.00	2
GLOVES, CUT RESISTANT, X-LARGE, 13 GAUGE RING SPUN DYNEEMA, POLYURETHANE, GREY SHELL/ BLACK PALM	$ 240.00	40
GLOVES, CUT RESISTANT, XX LARGE, 13 GAUGE RING SPUN DYNEEMA, POLYURETHANE, GREY SHELL/BLACK PALM	$ 50.40	8
GLOVES, DISHWASHING, X-LARGE, 12IN L, NATURAL LATEX, YELLOW, LINED	$ 0.96	4
GLOVES, DISPOSABLE, LARGE, LATEX, 50 PR/PER/BX	$ 140.83	35
GLOVES, DISPOSABLE, X-LARGE, 9-1/2IN L, 100% NITRILE - 8 MIL, BLUE, POWDERED	$ 39.12	4
GLOVES, DRIVERS GLOVE, LARGE, LEATHER, BROWN, SHORT	$ 722.86	143
GLOVES, ELECTRICAL, PROTECTOR, LOW VOLTAGE, SIZE 10, GOAT SKIN, LABELED LOW VOLTAGE IN BLACK LETTERS	$ 914.70	68
GLOVES, ELECTRICAL, PROTECTOR, LOW VOLTAGE, SIZE 11, GOAT SKIN, LABELED LOW VOLTAGE IN BLACK LETTERS	$ 536.00	40
GLOVES, ELECTRICAL, PROTECTOR, LOW VOLTAGE, SIZE 8, GOAT SKIN, LABELED LOW VOLTAGE IN BLACK LETTERS	$ 268.00	20
GLOVES, ELECTRICAL, PROTECTOR, LOW VOLTAGE, SIZE 9, GOAT SKIN, LABELED LOW VOLTAGE IN BLACK LETTERS	$ 1,193.63	89
GLOVES, EXTRA LARGE (F/SIZE 12), NEWTON COWHIDE, SAFETY, STYLE 6765, WINGED THUMB GUN CUT,FULL KNUCKLE STRAP, ELASTIC, LINED, NO LOGO	$ 172.13	57
GLOVES, GENERAL WORK, LARGE, LEATHER PALM/THINSULATE LINING, BLUE/GOLD, KNIT	$ 421.16	46
GLOVES, GENERAL WORK, SMALL, LEATHER PALM/THINSULATE LINING, BLUE/GOLD, KNITWRIST	$ 127.10	14
GLOVES, GLOVE PROTECTOR, 10, 14IN OAL L, BUFF COWHIDE, BROWN, HALF GREEN LEATHER AND HALF ORANGE VINYL	$ 559.75	25
GLOVES, GLOVE PROTECTOR, 11, 14 OAL L, BUFF LEATHER, BROWN, HALF GREEN LEATHER AND HALF ORANGE VINYL	$ 201.51	9
GLOVES, GLOVE PROTECTOR, 9, 14IN OAL L, COWHIDE LEATHER, BROWN, HALF GREEN LEATHER AND HALF ORANGE VINYL	$ 291.07	13
GLOVES, INNER LINER, LARGE, 100% COTTON, WHITE, 2IN CUFF STANDARD	$ 70.02	293
GLOVES, JERSEY SLIP ON STYLE (MENS), 13 OZ, SPECIALLY FORMULATED, FLAME RESISTANT,, DOMESTIC MADE ONLY	$ 91.42	168
GLOVES, LARGE (F/ SIZE 11), NEWTON COWHIDE, SAFETY, STYLE 6765, WINGED THUMB,GUN CUT,FULL KNUCKLE STRAP, ELASTIC LINED,NO LOGO	$ 402.63	130
GLOVES, MECHANIC, SMALL, 9IN L, PIGSKIN, BLUE/BEIGE, VELCRO, BALD EAGLE	$ 65.00	12
GLOVES, MECHANIC, XX-LARGE, 9IN L, PIGSKIN, BLUE/BEIGE, VELCRO, BALD EAGLE	$ 659.76	116
GLOVES, MECHANICS, EXTRA LARGE, 9IN L, PIGSKIN, BLUE/BEIGE, VELCRO, BALD EAGLE	$ 535.42	102
GLOVES, MECHANICS, LG, 9IN L, PIGSKIN, BLUE/BEIGE, VELCRO, BALD EAGLE	$ 474.70	90
GLOVES, MECHANICS, MED, 9IN L, PIGSKIN, BLUE/BEIGE, VELCRO, BALD EAGLE	$ 227.49	41
GLOVES, MEDIUM (F/ SIZE 9 AND 10), NEWTON COWHIDE, SAFETY, STYLE 6765, WINGED THUMB GUN CUT, FULL KNUCKLE STRAP,W/, ELASTIC LINED, NO LOGO	$ 455.24	148
GLOVES, ONE SIZE FITS ALL, 9-1/4IN L, 100% COTTON, WHITE, MED WEIGHT	$ 3.66	15
GLOVES, PREMIUM GRADE GRAIN ALL LEATHER, XL LARGE, 9-1/4IN L, LEATHER, SHORT	$ 97.16	18
GLOVES, PROTECTIVE, 10, 12IN L, LEATHER, CREAM, GAUNTLET, CUFF STYLE 6775,WINGED THUMB,GUN CUT,FULL	$ 68.75	22
GLOVES, PROTECTIVE, 11 - LG, LEATHER, GAUNTLET, STYLE 6775, WINGED THUMB,GUN CUT,FULL KNUCKLE, STRAP, LINED, NO LOGO	$ 170.63	56
GLOVES, PROTECTIVE, 12 - 13 X-LG, 10-1/2IN L, LEATHER, CREAM, SAFETY, FULL KNUCKLE STRAP, # 6765, WINGED THUMB GUN	$ 76.22	26
GLOVES, PROTECTIVE, 12 - X-LG, 12-1/4IN L, LEATHER, CREAM, GAUNTLET, STYLE 6775 WINGED THUMB,GUN CUT,FULL KNUCKLE, STRAP,LINED, NO LOGO	$ 21.19	7
GLOVES, PROTECTIVE, 8, 13IN L, LEATHER, CREAM, 4IN	$ 303.24	12
GLOVES, PROTECTIVE, 9 - MED, 10IN L, LEATHER, CREAM, SAFETY, UNLINED, CUFF STYLE 6765 WINGED THUMB GUN CUT,, FULL KNUCKLE STRAP, NO LOGO	$ 493.56	165

Inventory Provided by Affiliate to Duke Energy Kentucky
For the Year Ended December 31, 2008

COMPANY_SOL CATALOG_DESC	Values Sum of SumOfTRANS_AMT	Sum of SumOfTRANS_QTY
GLOVES, SAFETY, WORK, LG, RIBBED SPANDEX / SYN. LEATHER, PADDED PALM W/ VELCRO AND ELASTIC WRIST	$ 370.56	32
GLOVES, SAFETY, WORK, MED, RIBBED SPANDEX/ SYN LEATHER, PADDED PALM W/ VELCRO AND ELASTIC WRIST	$ 405.30	35
GLOVES, SAFETY, WORK, XLARGE, RIBBED SPANDEX/SYN LEATHER, PADDED PALM W/VELCRO AND ELASTIC WRIST	$ 544.26	47
GLOVES, SMALL, COWHIDE, SAFETY, SHORT, NO LOGO, LINED	$ 140.30	46
GLOVES, WORK, LG, GRAIN COWHIDE, WHITE/BROWN/BLUE STRIPE CUFF, RUBBER SAFETY, COWHIDE PALM & INDES FINGER, SPLIT COWHIDE	$ 249.70	84
GOGGLES, CLEAR, FOG PROOF INDIRECT VENT MEETS REQS OF ANSI-	$ 328.32	76
GOGGLES, MINI SAFETY, CLEAR FOGPROOF, GREEN TINTED BODY & VENT, ELASTIC HEAD BAND, F/ SMALLER FACES AND	$ 45.56	9
GOGGLES, SAFETY, CLEAR, FOG FREE	$ 119.34	27
GREASE, INDUSTRIAL, BEARING, -40 TO 400 DEG F, BROWN, 14.1 OZ TUBE, CONTAINS SILIC	$ 174.87	4
GREASE, INDUSTRIAL, VALVE, -20 DEG F TO 250 DEG F, WHITE, SIZE D	$ 39.53	1
GREASE, INDUSTRIAL, VALVE, BROWN, SIZE B	$ 53.29	1
GREASE, INDUSTRIAL, XHP 222, MAXIMUM TEMP 284 DEG F, LITHIUM COMPLEX THK, 220 VSC, DARK BLUE, 14.1 OZ TUBE / 400 GRAM TUBE, NLGI GRADE 2	$ 33.20	20
GREASE, LUBRICATING JELLY, SILICONE GREASE COMPOUND	$ 445.85	44
GRIP, CABLE, SUPPORT, TIN-COATED BRONZE, 3100 LBS, 2.0IN TO 2.49IN, OFFSET EYE, SPLIT MESH, ROD CLOSING, SINGLE WEA	$ 335.33	9
GRIP, CABLE, SUPPORTING, ALUM, 1-1/2IN TO 1-3/4IN, CLOSED (SINGLE U EYE) SINGLE CABLE	$ 303.45	19
GRIP, CABLE, SUPPORTING, ALUM, 1-1/4IN TO 1-1/2IN, R125U RISER CLOSED (SINGLE U EYE), SINGLE CABLE KELLEMS #022-01-018 SLATER CAT NO FC12 5U	$ 1,342.34	65
GRIP, CABLE, SUPPORTING, ALUM, 1IN TO 1-1/4IN, CLOSED (SINGLE U EYE) SINGLE CABLE, KELLEMS CAT NO 022-01-017 PREFERRED SLATER CAT NO FC100-U	$ 2,672.26	194
GRIP, CABLE, WIRE, GALV STEEL, 5000 LB, 5/16IN TO 7/16IN	$ 2,126.76	15
GRIP, PLIER, 8IN OR 9IN, NEVER-SLIP PLASTIC, BRIPS FOR 8IN AND 9IN PLIERS	$ 55.39	11
GRIP, SAFETY ALL TRACTION FOOTWEAR, 10-12, TUNGSTEN CARBIDE PINS, OPEN DESIGN FITS OVER WORK SHOES AND BOOTS	$ 471.20	16
GRIP, SAFETY ALL TRACTION FOOTWEAR, 12-1/2 - 13-1/2, TUNGSTEN CARBIDE PINS, OPEN DESIGN FITS OVER WORK SHOES AND BOOTS	$ 382.85	13
GRIP, SAFETY ALL TRACTION FOOTWEAR, 7 - 9.5, TUNGSTEN CARBIDE PINS, OPEN DESIGN FITS OVER WORK SHOES AND BOOTS	$ 242.26	8
GRIP, SAFETY, ALL TRACTION FOOTWEAR, 11-12, PVC/ALUM OXIDE GRIT, OPEN DESIGN, FITS OVER WORKSHOES AND BOOTS	$ 102.32	3
GRIP, SAFETY, ALL TRACTION FOOTWEAR, 6-8, PVC/ALUM OXIDE GRIT, OPEN DESIGN, FITS OVER WORKSHOES AND BOOTS	$ 172.25	5
GRIP, SAFETY, ALL TRACTION FOOTWEAR, 9-10, PVC/ALUM OXIDE GRIT, OPEN DESIGN, FITS OVER WORKSHOES AND BOOTS	$ 168.20	5
GRIP, SAFETY, ALL TRACTION, FOOTWEAR, 13+, PVC/ALUM OXIDE GRIT, ONE DESIGN, FITS OVER WORKSHOES AND BOOTS	$ 238.91	7
GROUND, SET, 15FT LG, COPPER, 2/0 YELLOW CABLE, W/ 2 EA - 1-1/4IN C CLAMPS, ONE ON EA END	$ 1,140.00	6
GROUND, SET, 25 FT LG, COPPER, 2/0 CABLE, TWO C-HEAD GROUND CLAMPS W/	$ 277.95	1
GROUND, SET, 50 FT LG, COPPER, 2/0 CABLE, W/LG BOLTED TERM C-HEAD CLAMPS BOTH	$ 429.30	1
GUARD, - U -, RISER, 1IN NOMINAL X 120IN LG X 90 MIL THK, PVC, FLANGED	$ 596.29	129
GUARD, ANIMAL, 12IN WD X 12IN LG X 1/8IN THK, POLYETHLENE, HIGH DENSITY BLACK	$ 1,493.70	472
GUARD, FOOT, ALUMINUM, #ELL202X MENS RIGIDLUM, EQUIPPED	$ 52.10	1
GUARD, U- RISER, 2IN OD, 9FT 6IN LG, PVC, POWER MOLD	$ 2,296.22	373
GUARD, U, RISER, 3IN OD, 9FT6IN LG, PVC, BELL FLANGED, GRAY HEAVY DUTY, POWER MOLD	$ 2,928.51	256
GUARD, U, RISER, 5IN OD, PVC, EXTENSION, POWER MOLD	$ 522.36	33
GUARD, WILDLIFE, 5IN HT, POLYPROPOLENE COPOLYMER,UV RESISTANT, GRAY, HINGED, HAND MOUNT	$ 1,132.85	559
GUARD, WILDLIFE, 9IN HT, POLYPROPOLENE COPOLYMER,UV RESISITANT, GRAY, HINGED, HAND MOUNT	$ 130.50	58
HAMMER, BALL PEIN, 2 LB, STEEL, WOOD, 15IN L	$ 11.11	1
HAMMER, CAULKING, 3 LB, STEEL, WOOD, DRILLING, W/HANDLE	$ 99.19	10
HAMMER, CLAW, 2 LB, STEEL, HICKORY, LINEMANS PAINTED BLACK	$ 452.87	14
HAMMER, CURVED CLAW, 1-1/4 LB, STEEL PAINTED, WOOD, NAILING, POLISHED HEAD, PERMA BOND CONSTRUCTION	$ 34.00	3
HAMMER, DOUBLE FACED SLEDGE, 2-1/2 LB, STEEL, FIBERGLASS, CUSHION GRIP	$ 108.75	6
HAMMER, MALLET, 18 OZ LB, RUBBER, WOOD	$ 33.49	3
HAMMER, SCALING, 1 LB, STEEL, HICKORY, 13IN OVERALL LGTH	$ 42.12	4
HAMMER, SLEDGE, 10 LB, STEEL, HICKORY, DOUBLE FACE BLACKSMITH	$ 124.12	6
HAMMER, SLEDGE, 12 LB LB, STEEL, HICKORY, DOUBLE FACE BLACKSMITH HEAD PAINTED RED,34IN LG	$ 189.35	7
HANDHOLE, 30IN X 20IN X 16IN, FIBERGLASS OR POLYETHYLENE, SECONDARY, W/COVER LETTERED ELECTRIC, W/SS PENTA HEAD BOLTS SECONDARY CONNECTION	$ 358.27	6
HANDLE, FILE, HARDWOOD	$ 17.68	12
HANDLE, FILE, NO 2, 4IN L, SHORT FERRULE	$ 4.80	6
HANDLE, PICK, 36IN LG, WOOD	$ 30.57	3
HANDLE, STREET BROOM, 1-1/8IN DIA X 60IN LG, WOOD TAPERED END UNTHREADED, FOR 16IN WIDE BROOM	$ 3.89	1
HANDLE, TURBO TORCH, 8IN LG, BRASS	$ 231.69	4
HANGER, CABLE RACK, 3INWD X 31IN LG, LEXAN	$ 356.49	31
HARNESS, FULL BODY, NYLON, LARGE, WITH BUCKLE CHEST STRAPS	$ 99.91	1
HARNESS, FULL BODY, X LARGE, WITH CHEST STRAPS	$ 100.20	1
HARNESS, FULL BODY, NYLON, X LARGE, W/ VELCRO CHEST STRAPS	$ 353.65	3
HARNESS, FULL BODY, NYLON, LARGE, WITH VELCRO CHEST STRAPS	$ 480.48	4

Inventory Provided by Affiliate to Duke Energy Kentucky
For the Year Ended December 31, 2008

COMPANY_SOL CATALOG_DESC	Values Sum of SumOfTRANS_AMT	Sum of SumOfTRANS_QTY
HARNESS, FULL BODY, NYLON, MEDIUM, WITH VELCRO CHEST STRAPS	$ 455.42	4
HARNESS, FULL BODY, NYLON, SMALL, WITH VELCRO CHEST STRAPS	$ 191.02	2
HAT, BASEBALL CAP, KHAKI/NAVY, TWO-TONE BRUSHED TWILL-100% COTTON, DESIGNATION-DUKE ENERGY-ONE SIZE FITS MOST	$ 328.41	41
HAT, PROTECTIVE HARD, FRONT BRIM, V-GARD, WHITE W/ EMBOSSED DUKE ENERGY LABEL, PLASTIC, STANDARD SIZE 6-1/2 TO 8, RATCHET SUSPENSION	$ 48.75	5
HAT, PROTECTIVE HARD, FULL BRIM, V-GARD, WHITE W/ EMBOSSED DUKE ENERGY LABEL, PLASTIC, STANDARD SIZE 6-1/2 TO 8, RATCHET SUSPENSION	$ 33.48	2
HAT, PROTECTIVE HARD, FULL BRIM, V-GARD, WHITE W/ EMBOSSED DUKE ENERGY LABEL, PLASTIC, STANDARD SIZE 6-1/2 TO 8, STAZ ON SUSPENSION	$ 213.84	24
HAT, PROTECTIVE, HARD, FRONT BRIM, V-GARD, WHITE W/ EMBOSSED DUKE ENERGY LABEL, PLASTIC, STANDARD SIZE 6-1/2 TO 8 STAZ ON SUSPENSION	$ 182.51	31
HEADER, METER, 22IN LG, STEEL	$ 507.65	19
HEADER, METER, 2FT 9-1/2IN LG, STEEL	$ 849.98	25
HEADER, METER, 3FT 8IN LG, STEEL	$ 1,054.50	22
HEADER, METER, 65IN LG, STEEL	$ 361.40	7
HINGE, REPAIR, SWITCH, 69KV, 1200A, TIN PAD	$ 6,621.96	30
HOLDER, CARTRIDGE, 8-1/2IN LG X 1/16IN THK, ALUM AND NEOPRENE TUBING	$ 70.73	1
HOLDER, FLAG, 3/4IN W X 2IN L X 1/16IN TH, GALVANIZED STEEL, RETRO FIT FLAG HOLDER	$ 15.36	2
HOLDER, FUSE, 15KV, 100, LINK, HINGED	$ 866.79	42
HOLDER, FUSE, 15KV, 200A, SWITCH, 12000A- INTERRUPT CAPACITY, 110KV BIL,	$ 1,450.61	36
HOLDER, FUSE, 15KV, 400E MAX, VERTICAL STYLE, SM-5, FUSE DISCONNECT, 180 DEG OPENING,	$ 1,086.65	2
HOLDER, FUSE, 250V, 0.1-30AMP, 9/16IN X 2IN, NON, SCREW	$ 98.90	18
HOLDER, MATCH, 6IN WD X 24IN LG, STEEL	$ 384.30	126
HOOD, SAFETY, 2 PLY - HEAVY DUTY, NOMEX	$ 2,118.45	107
HOOK, AERIAL BUCKET, 5/8IN DIA W/ 3 1/8IN OPENING, NONCONDUCTIVE PLASTIC, 1 PAIR, WILL FIT BUCKETS W/ LINERS	$ 206.10	10
HOOK, BELT, BREAKAWAY, NON-CONDUCTIVE	$ 18.78	8
HOOK, GUY, EYE/HOOK COMBINATION, 9/16IN MAX, DUCTILE IRON HOT DIPPED GALV, 20,000 LBS, W/CLEATS, HOG EAR	$ 6,121.04	983
HOOK, LOAD RATED, SWIVEL ANCHOR, 750 LB, 3-1/4IN OPENING, FORGED STEEL	$ 37.60	2
HOOK, LOAD RATED, TACKLE BLOCK ANCHOR, 750 LB WORKING LOAD, FORGED STEEL, 3-1/4IN OPENING, STRAIGHT	$ 121.68	8
HOOK, PIPE, 1IN X 10IN, 9 GA STEEL	$ 86.11	189
HOOK, PIPE, 1IN X 6IN, 9 GA STEEL, COPPER COATED	$ 89.89	89
HOOK, S, 6IN, PLASTIC	$ 189.60	48
HOSE, AIR, 3/4IN ID X 100FT LG, NEOPRENE, 300 PSI, PREMIUM QUALITY NEOPRENE	$ 79.00	100
HOSE, AIR, 3/8IN ID, BRASS, OIL RESISTANT RED RUBBER, 250 PSI	$ 37.12	2
HOSE, ASPIRATOR BULB, 1/16IN ID X 8IN LG, RUBBER	$ 6.02	2
HOSE, GAS, 3/16IN ID X 12FT LG, COUPLER, RUBBER GR R, 200 PSI, CPLD W/3/16IN LEFT HAND THD FITTINGS EACH END	$ 59.18	6
HOSE, GAS, 5FT LG, MALE, RUBBER, SAMPLE LINE COMPLETE W/ONE MALE AND ONE	$ 60.13	2
HOSE, GREASE GUN, 14IN LG, COUPLER, RUBBER, 4600 PSI	$ 22.50	3
HOSE, INSULATING LINE,CONVENTIONAL, 1-1/2IN X 4-1/2FT LG, CONNECTOR END, RUBBER, CLASS 3, ORANGE	$ 4,542.12	62
HOSE, INSULATING LINE,CONVENTIONAL, 1-1/2IN X 6FT LG, CONNECTOR END, RUBBER, CLASS 3, ORANGE	$ 7,183.26	90
INDEX, DRILL BIT, Q 118 POINT, TIN COATED STEEL	$ 195.45	28
INHIBITOR, GALVANIC CORROSION, 8 OZ PLASTIC BOTTLE, NO GRIT, MINERAL OIL BASE,WORKABLE TEMP. RANGE	$ 167.76	36
INHIBITOR, GALVANIC CORROSION, 8 OZ PLASTIC BOTTLE, W/ GRIT, 12 EA/PK	$ 142.73	28
INSECTICIDE, WASP AND HORNET, AEROSOL, 14 OZ CAN	$ 1,602.51	273
INSERT, BUSHING WELL, EPDM RUBBER, 200A,15KV ROTATABLE LOADBREAK FEED THRU	$ 2,505.73	25
INSERT, TUBE	$ 27.26	29
INSERT, TUBE, 1.020 OD, .975 ID, COPPER, INSERT-1-020 OD HD CU	$ 86.35	66
INSERT, TUBE, 1IN OD, 3/4IN ID, COPPER	$ 114.89	117
INSULATION, PIPE, WRAP, 17IN WD X 48IN LG, 12IN, PLASTIC, SHRINK WRAP FOR 12IN PIPE WELDS	$ 1,338.94	68
INSULATION, PIPE, WRAP, 17-1/2IN WD X 34IN LG, 8IN, PLASTIC, SHRINK WRAP FOR 8IN PIPE WELDS	$ 443.74	30
INSULATION, PIPE, WRAP, 18IN WD X 25IN LG, 6IN, PLASTIC, SHRINK WRAP F/ 6INPIPE WELDS	$ 4,618.78	354
INSULATOR, BASE, 12IN SQ X 1/4IN THK, LAMINATE GR L	$ 261.01	22
INSULATOR, BASE, 12IN SQ X 1/8IN THK, LAMINATE GR L	$ 196.91	22
INSULATOR, COLD SHRINK, 1KV, 1IN ID X 11IN LG, PLASTIC AND RUBBER, 10 PER/CASE	$ 513.17	70
INSULATOR, COLD SHRINK, 1KV, 2IN ID X 12IN LG, PLASTIC AND RUBBER, (10) PER CASE	$ 689.46	60
INSULATOR, GUY STRAIN, 44-1/2IN TO 44-7/8IN CENTER TO CENTER, FIBERGLASS, 21,000 LB, 15/16IN CLEVIS WD MINIMUM	$ 5,682.18	358
INSULATOR, GUY STRAIN, 88IN OAL, 78IN LG X 13/16IN, FIBERGLASS, 21,000 LBS ULTIMATE STRENGTH, COMPLETE W/1 ROLLERS & 2-3/4IN CLEVIS PINS	$ 13,397.65	778
INSULATOR, LINE - DUC, 15KV, 8 FT LONG, TRACK RESISTANT HIGH DENSITY POLYETHYLENE, WITH A 3/8IN DIA. HOLE DRILLED THROUGHEACH END OF THE LI	$ 205.51	4
INSULATOR, LINE PIN, 27KV, 8-3/8IN DIA X 5-1/2IN LG, PORCELAIN, GRAY, 1IN PIN HOLE	$ 19.90	2
INSULATOR, LINE PIN, 7.5/13KV, PORCELAIN, F NECK, NECK DIA. 2-7/8IN, CLASS 55.4, LINE	$ 221.85	71
INSULATOR, LINE POST, 25KV, 6IN DIA X 8.5IN LG, PORCELAIN, LIGHT GRAY MUNSELL ANSI 57.1	$ 16,770.45	1,604

Inventory Provided by Affiliate to Duke Energy Kentucky
For the Year Ended December 31, 2008

COMPANY_SOL CATALOG_DESC	Values Sum of SumOfTRANS_AMT	Sum of SumOfTRANS_QTY
INSULATOR, LINE POST, 35KV, 6IN DIA X 12IN LG, PORCELAIN, GRAY SIZE: 6IN DIA X 12IN HT 1IN GROOVE	$ 1,603.70	97
INSULATOR, PIPE-THINSULATOR(M-2), 6IN, PLASTIC	$ 627.59	22
INSULATOR, PIPE-THINSULATOR(M-2), 8IN, PLASTIC	$ 197.62	6
INSULATOR, POST, LINE, 138KV, POLYMER, TONGUE	$ 5,487.51	21
INSULATOR, POST, LINE, 23KV, 12IN, PORCELAIN, VERTICAL CLAMP TOP	$ 72.12	2
INSULATOR, POST, LINE, 69KV, POLYMER, GRAY HORIZONTAL, TONGUE END	$ 7,599.45	41
INSULATOR, SECONDARY, 3-1/8IN DIA X 3IN LG, PORCELAIN, SPOOL, 11/16IN HOLE	$ 500.38	662
INSULATOR, STRAIN, 16-1/2IN LG, FIBERGLASS, 0.14IN-0.502IN CABLE RANGE,W/DUCTILE IRON	$ 1,846.04	79
INSULATOR, SUSPENSION, 138KV, 3IN DIA.,53IN LGTH, POLYMER, Y-BALL ENDS,FBGLS ROD, 12,500 LB RTL	$ 4,104.47	57
INSULATOR, SUSPENSION, 15KV, (12-1/2IN X 13-1/2IN) LG, POLYMER, RATING: 10,000 LB TEST, COLOR: GRAY	$ 10,364.54	1,301
INSULATOR, SUSPENSION, 35KV, (18-1/2IN X 19-1/2IN) LG, POLYMER, RATING 10,000 LB TEST, GRAY W/CLEVIS AND EYE	$ 1,428.96	108
INSULATOR, SUSPENSION, 69KV, 34.7IN LENGTH, POLYMER, 4 DISC, Y-BALL	$ 2,635.29	42
INTERRUPTER, CIRCUIT, GFCI RECEPTACLE TESTER	$ 55.07	2
INTERRUPTER, SWITCH, 69KV, ARCHING HORNS, V SINGLE-POLE ASSY,	$ 1,599.40	30
INTERRUPTER, VACRUPTER, 69KV, 1200A, SINGLE PHASE, LEFT HAND INSTALLATION	$ 4,184.99	3
JOINT, WRENCH ATTACHMENT, 1/2IN DRIVE, 2-15/16IN LG, STEEL, IMPACT	$ 183.33	9
KEY, BARREL LOCK, 3 1/2INLG X 3/4INDIA, RED SWIVEL HANDLE WITH BLACK PLASTIC, COVER OVER PIN	$ 2,772.05	126
KEY, LOCK, #687, FOR #659A LOCKS	$ 17.90	12
KEY, STREET, STEEL	$ 945.80	8
KEY, VALVE, 4FT LG, STEEL, 2IN SQUARE HEAD	$ 131.87	1
KIT, 425 BRACKET 8IN W.C, SWIVELS FOR 425 METER TO BE SET 8-1/4IN CENTER-, TO-CENTER, F/HP SERVICE IN KENTUCKY	$ 885.97	10
KIT, 425 METER BRACKET- 8IN W.C., IP, 1-1/4IN INLET, KENTUCKY, SWIVELS F/425 METER TO BE SET 8-1/4IN	$ 2,215.67	25
KIT, BALLAST STARTING, 200 WATT AND ABOVE HIGH PRESSURE SODIUM LUMINAIRES	$ 372.74	15
KIT, BIOHAZARD DISPOSAL, 8IN X 4.4IN X 1.5IN WHITE HIGH IMPACT, RESISTANT POLY	$ 525.86	37
KIT, BOILER TEST, CONSISTS OF - SULFURIC ACID P/N - R087,, PHENOLETHEOLENE P/N - R638, MOLYBDATE REAGENT	$ 337.00	2
KIT, CHRISTMAS TEMPORARY SERVICE, CONSISTS OF - (1) ELECTRICAL POWER PANEL -, 50114044, (1) CIRCUIT BREAKER - 50114046,	$ 2,800.00	16
KIT, CONNECTING HARDWARE, T- BASE TO POLE, SET-4 EA - 1IN BOLTS, NUTS, LOCKWASHERS, FLAT, WASHERS & 8 - 1INX1/2INTHK X2 3/4IN O.D. WASHERS	$ 22.02	1
KIT, COVERS FOR ANCHOR BOLTS FOR HAPCO POLES, INCLUDES SET OF 4, COVERS WITH 4 STAINLESS, STEEL HEX HEAD SCREWS	$ 24.02	1
KIT, GAS SERVICE METER BRACKET, 8IN W.C., F/USE IN KENTUCKY	$ 45,544.14	800
KIT, GAS SERVICE METER BRACKET, PRE-FABRICATED S.P. 425 AL CLASS, 1-1/4IN INLET, SWIVELS F/425 METER TO BE SET	$ 97.80	2
KIT, GAS SEVICE METER BRACKET, 2 LB., 175/250, W/ RED CLOSING CAP, F/USE IN OHIO ONLY	$ 2,704.76	50
KIT, GASKET, INSULATING SET, 12IN 150# FLANGE	$ 62.75	1
KIT, GASKET, INSULATING SET, 12IN 300# FLANGE	$ 579.77	3
KIT, GASKET, INSULATING SET, 2IN 150# FLANGE	$ 881.05	67
KIT, GASKET, INSULATING SET, 2IN, 300# FLANGE	$ 212.75	5
KIT, GASKET, INSULATING SET, 3IN 150# FLANGE,	$ 313.36	22
KIT, GASKET, INSULATING SET, 4IN 150# FLANGE	$ 348.75	15
KIT, GASKET, INSULATING SET, 4IN 300# FLANGE	$ 735.66	12
KIT, GASKET, INSULATING SET, 6IN 150# FLANGE	$ 21.18	1
KIT, GASKET, INSULATING SET, 6IN 300# FLANGE	$ 884.94	9
KIT, GASKET, INSULATING SET, 8IN 150# FLANGE	$ 95.25	3
KIT, GROUNDING ACCESSORY, CABLE SIZE 1/0 15KV, GRD STRAP, SPRING, DRAIN WIRE FOR ELBOW	$ 3,502.51	573
KIT, GROUNDING, ACCESSORY, CABLE SIZE, 2-3/0, 15KV-25KV, POTHEAD TERMINATION	$ 943.78	178
KIT, LED SAFETY LIGHTS, INCLUDES (4) AMBER MULTI PURPOSE SIGNAL LIGHTS,, (4) SAFETY CONE ADAPTER BRACKETS. COMES IN A	$ 5,832.84	52
KIT, METER AND REGULATOR COMPONENT	$ 8,219.77	47
KIT, METER AND REGULATOR COMPONENT,	$ 1,028.56	8
KIT, METER AND REGULATOR COMPONENT, N/A	$ 2,085.49	10
KIT, METER AND REGULATOR COMPONENT, N/A, N/A	$ 449.16	3
KIT, MOUNTING HARDWARE FOR TRUSS MAST ARMS, FOR ALUM POLE, 6 BOLTS, 1/2IN X 13NC-2X 1 3/4IN, LG, HEX HEAD, 6 LOCKWASHERS	$ 13.22	2
KIT, POLECAP WITH SET SCREWS FOR HAPCO POLES, 6 IN. DIAMETER, CAST ALUM., WITH STL HEX HD SCREWS	$ 26.28	2
KIT, REPAIR ALDYL SERVICE TEES, CONSISTS OF (1) - 1/4IN POLYETHYLENE CAP,, (1) 1-1/4IN ELECTROFUSION COUPLING & LUBRICANT	$ 1,181.11	47
KIT, SPLICE GROUNDING AND SHIELDING, MESH SOCK OVER MOLDED RUBBER SPLICE, FOR 2-1/0 15KV CABLE	$ 1,048.58	107
KIT, TOTAL SYSTEM CONFORMANCE (TSC) TEST KIT, POCKET COLORIMETER, LCD	$ 550.00	1
KIT, WELDING, STORAGE BOX, CRIMPING TOOL, WIREBRUSH	$ 400.53	4
KIT, WOODPECKER PATCH, 1600ML, DUAL CARTRIDGE POLYURETHANE GEL,, 1:1 RATIO	$ 887.60	2
KIT, Z, INCLUDES - (2) RIVETS, (2) BACK-UP WASHERS	$ 12.00	6
KNIFE, LINOLEUM, 7IN, STEEL, WITH WOODEN HANDLE	$ 704.25	153

Inventory Provided by Affiliate to Duke Energy Kentucky
For the Year Ended December 31, 2008

COMPANY_SOL CATALOG_DESC	Values Sum of SumOfTRANS_AMT	Sum of SumOfTRANS_QTY
KNIFE, POCKET, 6IN LG, STEEL, WITH BLADE	$ 101.97	7
KNIFE, POCKET, STANLEY	$ 222.27	37
KNIFE, PUTTY, STD., STEEL BLADE,WOOD HANDLE	$ 136.19	28
KNIFE, ROPE CUT, 7IN, STEEL, STD PKG/6	$ 23.25	2
KNIFE, SKINNING (LINEMANS) CURVED BLADE, (M52), W/PLASTIC HNDL AND W/STEEL RING ON END OF HNDL	$ 652.35	51
KNIFE, SKINNING, XELA, WITH STRAIGHT FOLDING BLADE	$ 321.03	20
KNIFE, UTILITY W/BLADE STORAGE IN HANDLE, 6INLONG, DIE CAST	$ -	0
KNIFE, XELA LINEMANS, (M-50), WITH CURVED FOLDING BLADE	$ 190.23	9
LADDER, EXTENSION, 24FT LG, FIBERGLASS, 2, TYPE 1A, 300LB DUTY RATING, D RUNG	$ 1,323.81	4
LADDER, STEP, 6FT LG, FIBERGLASS, ELECTRICIANS, TYPE 1A, 300 LB DUTY	$ 262.68	3
LADDER, STRAIGHT, 10FT, FIBERGLASS, TYPE 1AA, 375 LB SPECIAL DUTY RATING, RIVETED	$ 234.68	2
LAMP, FLASHLIGHT, KRYPTON, #K3-2	$ 9.46	22
LAMP, FLUORESCENT, RAPID START, 110(A/C) V, 34 W, COOL WHITE, BIPIN, 48IN LG, T-12, STD PKG/30	$ 32.10	30
LAMP, HID, HIGH PRESSURE SODIUM, 100 W, 9500, CLEAR, MOGUL, ED23-1/2, STD PKG/1	$ 4,676.92	650
LAMP, HID, HIGH PRESSURE SODIUM, 150 W, 16000, CLEAR, MOGUL, ED23-1/2, STD PKG/1	$ 120.70	15
LAMP, HID, HIGH PRESSURE SODIUM, 200 W, 22000, CLEAR, MOGUL, ED18, CLEAR	$ 373.97	48
LAMP, HID, HIGH PRESSURE SODIUM, 250 W, 30000, CLEAR, MOGUL, E18, STD PKG/1	$ 8.36	1
LAMP, HID, HIGH PRESSURE SODIUM, 400 W, 50000, CLEAR, MOGUL, ED18, STD PKG/1	$ 2,485.42	300
LAMP, HID, MERCURY VAPOR, 100 W, DELUXE WHITE, MOGUL	$ 179.04	12
LAMP, HID, MERCURY VAPOR, 100 W, MOGUL, E-23	$ 108.41	12
LAMP, HID, MERCURY VAPOR, 175 W, 7000, CLEAR, MOGUL, E28, 24,000 HOUR LIFE	$ 1,556.77	378
LAMP, HID, MERCURY VAPOR, 175 W, 8500, WHITE, MOGUL, ED28	$ 780.26	168
LAMP, HID, MERCURY VAPOR, 400 W, 22500, WHITE, MOGUL, E37	$ 650.38	120
LAMP, HID, METAL HALIDE, 1000 W, CLEAR, MOGUL, BT56, STD PKG/1	$ 577.64	21
LAMP, HID, METAL HALIDE, 250 W, CLEAR, MOGUL, E28, 250V	$ 187.35	17
LAMP, HID, METAL HALIDE, 400 W, CLEAR, MOGUL, ED37, STD PKG/1	$ 208.80	19
LAMP, HID, METAL HALIDE, 400W W, 36,000, CLEAR, MOGUL, ED28, ANSI BALLAST, TYPE M59, UNIVERSAL BURN POSITION	$ 686.96	39
LAMP, HID, MULTI-VAPOR, METAL HALIDE, 175 W, CLEAR, MOGUL, E-28, STD PKG/1	$ 3,940.49	323
LAMP, INCANDESCENT, 60 W, 125 V, FROSTED, MEDIUM, A-19	$ 3.04	8
LAMP, INCANDESCENT, 75 W, 120 V, INSIDE FROSTED, MEDIUM, 4-7/16IN LG	$ 1.59	6
LAMP, INCANDESCENT, FLASHLIGHT, 2.47 V, CLEAR, SC MINIATURE FLANGED, PR6	$ 5.06	6
LAMP, INCANDESCENT, ROUGH SERVICE, 150 W, 125 V, INSIDE FROSTED, MEDIUM, A23	$ 9.26	6
LAMP, INCANDESCENT, TRAFFIC SIGNAL, 116 W, 120VAC V, CLEAR, MEDIUM, A21, 6000HR	$ 5.41	6
LAMP, INCANDESCENT, TRAFFIC SIGNAL, 150 W, 120(A/C) V, CLEAR, MEDIUM, P25, 1950 LUMEN	$ 32.16	20
LAMP, INCANDESCENT, TRAFFIC SIGNAL, 69 W, 120VAC V, CLEAR, MEDIUM, A21, STD PKG/1	$ 20.40	24
LAMP, MINIATURE, PR-7, 6, #1406	$ 3.26	6
LANYARD, RETRACTABLE, PLASTIC & WOVEN NYLON, 8IN, SWIVEL HOOK, W/ SWIVEL PLATE, FALL PROTECTION	$ 139.24	1
LANYARD, SHOCK ABSORBING, NYLON, 4 FT. LONG, DOUBLE LOCK SNAPS	$ 334.69	5
LANYARD, WORK POSTIONING, ROPE, METAL, 7.5FT, MICRO ASCENDER AND CARABINER, MULTI LAYER ROPE	$ 450.00	9
LEVEL, CARPENTERS, 24IN LG, COMPOSITE, (1) PLUMB, (1) 45 DEGREE, (1) LEVEL	$ 25.00	4
LEVEL, LINE, 3IN LG, ALUM, (1) 360 DEGREE	$ 1.83	1
LEVEL, TORPEDO, 9IN LG, CAST ALUM, (3)	$ 13.54	2
LEVELER, LADDER, MANUAL ADJUSTABLE LEG	$ 90.60	1
LID, CURB BOX, 4-1/4IN, CAST IRON SCREW TYPE WITH HOLE IN LID, NEW STYLE, GAS ON LID	$ 2,737.80	817
LID, PEDESTAL, SECONDARY, 10IN X 15IN X 18IN, POLYETHYLENE, DR GRN (MUNCELL)	$ 259.50	10
LID, SHAFT, 5-1/4IN DIA, CAST IRON, WITH A 3/8IN HOLE DRILLED IN LID, MARKED GAS	$ 1,857.49	164
LID, VALVE BOX, 22-3/4 X 14-1/2, GREEN PLASTIC, STAMPED GAS	$ 233.35	10
LIFELINE, ROPE, METAL, 75 FEET, COMPLETE KIT IN A BAG	$ 1,794.00	6
LIGHT, PERSONAL SAFETY, 2-AA BATTERIES, 3IN X 2IN COMPACT, RED PLASTIC, 5 LED LIGHTS, CAN	$ 2,020.59	429
LIGHT, XENON/LED HARD HAT, (3) AAA ALKALINE BATTERIES, FITS ON HARD HAT W/BANDS, PLASTIC AND RUBBER	$ 1,369.70	65
LIGHTER, GAS	$ 14.40	12
LIGHTER, SPARK, PISTOL SHAPED, SHOOT-A-LITE, STD PKG/10	$ 41.26	7
LINER, HARD HAT, ONE SIZE FITS ALL, WOOL, FITS BRIM AND OVER EARS, BRIGHT RED, FR	$ 44.66	7
LINER, HELMET, LARGE, COTTON TWILL, EXTENDED SHOULDER CAPE, DARK GREEN	$ 163.56	23
LINK, EXTENSION, ADJUSTABLE TRUNION, 24IN, GALV STEEL OR ALUM	$ 100.80	3
LINK, EXTENSION, CHAIN, 3-1/2IN TO 1IN, 60000 LB, GALV STEEL, 3/4IN INSIDE X 3/4IN THK	$ 374.36	45
LINK, EXTENSION, CHAIN, 45000 LB, GALV STEEL, 3-1/4IN X 1IN INSIDE X 5/8IN	$ 984.42	167

Inventory Provided by Affiliate to Duke Energy Kentucky
For the Year Ended December 31, 2008

COMPANY_SOL CATALOG_DESC	Values Sum of SumOfTRANS_AMT	Sum of SumOfTRANS_QTY
LINK, EXTENSION, CLEVIS, 14IN CENTER TO CENTER,, 11,000 LB, STL, 11/16IN DIA HOLES	$ 2,476.73	505
LINK, EXTENSION, CLEVIS-EYE, 20-5/8" CENTER TO CENTER, 15,000 LB, FIBERGLASS, 11/16" EYE 5/8"CLEVIS	$ 1,131.88	130
LINK, STA-BIL, LINE TENSION, 24IN	$ 2,770.26	69
LOCATOR, PIPE AND CABLE, 8 C BATTERIES, BUILT IN SPEAKER	$ 4,980.00	4
LOCATOR, VALVE BOX, 2 9VOLT BATTERIES, BUILT IN PIEZO SPEAKER	$ 1,590.00	2
LOCK, BARREL, STEEL	$ 1,496.92	900
LOCK, COMBINATION, RESETTABLE, REGULAR 3/4IN SHACKEL (12 PER CASE)	$ 356.72	26
LOCK, METER BASE LOCK, CARBON STEEL, SIDE MOUNT CLAMP AND T-HANDLE CLAMP SCREW	$ 1,186.70	130
LOCK, METER BASE LOCK, STEEL, JIFFY LOCK	$ 416.50	50
LOCK, METER, STEEL, #4 LOCK SILVER W/END CAP	$ 2,781.89	1,045
LOCK, PAD, #659-A	$ 1,706.25	225
LOCK, PAD, BARRELOCK, 5/16IN, 1-1/4IN, STEEL	$ 90.01	10
LOCK, PAD, COMBINATION, 5/16IN, 2IN, 2-3/16IN, 1IN, STEEL, R1781C COMBINATION	$ 354.20	26
LOCK, PAD, EQUIPMENT, 1/4IN-1IN, ALUMOWELD, TAMPER RESISTANT,TWIST-OFF SET SCREW	$ 1,135.84	1,914
LOCK, PAD, KEY, 5/8IN SHACKLE DIA, 1-3/4IN CASE SIZE, 5/8IN HORIZ CLEARANCE, 5/8IN VERT CLEARANCE, BRASS	$ 567.73	44
LOCK, PAD, KEY, 5/8IN, 2IN, 1IN, 3/4IN, BRONZE	$ 43.04	4
LOCK, PAD, KEY, BRONZE, KEYED ALIKE F/ USE W/ TYPE B, CONTROLLED KEY	$ 2,497.21	483
LOCK, PAD, SECRET SERVICE, 5/16IN, 1-3/4IN W X 7/8IN THK, 3/4IN, 7/8IN, HARDENED STEEL, SYSTEM AM5, SHACKLE, MASTER-KEYED	$ 123.34	13
LOCK, PLUNGER BARREL LOCK, STAINLESS STEEL, W/RING FOR ELECTRIC METERS	$ 2,460.00	400
LOCK, VALVE	$ 494.84	10
LUBRICANT, CABLE, 40 LB PAIL, F/LUB OF RUBBER JACKETED CABLE DURING INSTALL	$ 41.20	40
LUBRICANT, CABLE, RUBBER JACKETED, LIQUID, 1 GALLON, 4 ONE GALLON BOTTLES PER CASE	$ 172.19	16
LUBRICANT, ELECTRICAL GRADE, AEROSOL, 11 OZ CAN, PRECISION LUBIRCANT PENETRANT/CORROSION	$ 14.34	4
LUBRICANT, FLUID FILM, LIQUID, CORRSION INHIBITOR, 11-3/4 OZ CAN, AEROSOL SPRAY, FLUID FILM AEROSOL	$ 234.34	37
LUBRICANT, PENETRATING, AEROSOL, 11 OZ CAN, WD40	$ 638.17	176
LUBRICANT, PENETRATING, AEROSOL, 18 OZ CAN, MOISTURE DISPLACER AND CORROSION INHIBITOR	$ 17.27	3
LUBRICANT, PENETRATING, LIQUID, 4 OZ CAN, LIQUID WRENCH NO 2	$ 93.03	59
LUBRICANT, PULL/SOAP, LIQUID, 1 QT CAN	$ 17.79	3
LUBRICANT, SILICONE PASTE, GREASE, 5.3 OZ TUBE, TEMPERATURE RANGE 40 TO 400 DEG F, STD PKG/2 TU	$ 33.12	4
LUBRICANT, SILICONE, AEROSOL, 9 OZ SPRAY CAN, SPRAY ON LEATHER, METAL, RUBBER, VINYL, OR WOOD, TO PRESERVE	$ 125.52	18
LUMBER, EXTERIOR, 3/4IN THK X 4FT WD, 8FT LG, PLYWOOD, EXTERIOR, CDX	$ 2,952.00	82
MAGNET, PICK-UP, 16-3/4IN X 26-3/4IN, STEEL	$ 7.52	1
MARKER, COLD SURFACE, YELLOW, 5IN, WAX PAINT	$ 17.04	24
MARKER, FELT TIP, BLACK, PERMANENT INK, MARK X	$ 81.37	110
MARKER, GUY, YELLOW, 8 FT, PLASTIC, UV STABILIZED, W/PLASTIC TIES	$ 4,288.12	2,113
MARKER, POLE LETTER A, YELLOW REFLECTIVE ON BLACK BGND, 1IN WD X 1IN LG, PRESS SENSITIVE DESTRUCTIVE ADHV, 1 EA IS EQ TO 1 SHEET (70 TAGS)	$ 343.20	55
MARKER, POLE LETTER B, YELLOW REFLECTIVE ON BLACK BGND, 1IN WD X 1IN LG, PRESS SENSITIVE DESTRUCTIVE ADHV, 1 EA IS EQ TO 1 SHEET (70 TAGS)	$ 205.92	33
MARKER, POLE LETTER C, YELLOW REFLECTIVE ON BLACK BGND, 1IN WD X 1IN LG, PRESS SENSITIVE DESTRUCTIVE ADHV, 1 EA IS EQ TO 1 SHEET (70 TAGS)	$ 255.86	41
MARKER, POLE LETTER D, YELLOW REFLECTIVE ON BLACK BGND, 1IN WD X 1IN LG, PRESS SENSITIVE DESTRUCTIVE ADHV, 1 EA IS EQ TO 1 SHEET (70 TAGS)	$ 193.44	31
MARKER, POLE LETTER E, YELLOW REFLECTIVE ON BLACK BGND, 1IN WD X 1IN LG, PRESS SENSITIVE DESTRUCTIVE ADHV, 1 EA IS EQ TO 1 SHEET (70 TAGS)	$ 293.28	47
MARKER, POLE LETTER F, YELLOW REFLECTIVE ON BLACK BGND, 1IN WD X 1IN LG, PRESS SENSITIVE DESTRUCTIVE ADHV, 1 EA IS EQ TO 1 SHEET (70 TAGS)	$ 205.92	33
MARKER, POLE LETTER G, YELLOW REFLECTIVE ON BLACK BGND, 1IN WD X 1IN LG, PRESS SENSITIVE DESTRUCTIVE ADHV, 1 EA IS EQ TO 1 SHEET (70 TAGS)	$ 193.44	31
MARKER, POLE LETTER H, YELLOW REFLECTIVE ON BLACK BGND, 1IN WD X 1IN LG, PRESS SENSITIVE DESTRUCTIVE ADHV, 1 EA IS EQ TO 1 SHEET (70 TAGS)	$ 232.80	37
MARKER, POLE LETTER I, YELLOW REFLECTIVE ON BLACK BGND, 1IN WD X 1IN LG, PRESS SENSITIVE DESTRUCTIVE ADHV, 1 EA IS EQ TO 1 SHEET (70 TAGS)	$ 224.64	36
MARKER, POLE LETTER J, YELLOW REFLECTIVE ON BLACK BGND, 1IN WD X 1IN LG, PRESS SENSITIVE DESTRUCTIVE ADHV, 1 EA IS EQ TO 1 SHEET (70 TAGS)	$ 193.44	31
MARKER, POLE LETTER K, YELLOW REFLECTIVE ON BLACK BGND, 1IN WD X 1IN LG, PRESS SENSITIVE DESTRUCTIVE ADHV, 1 EA IS EQ TO 1 SHEET (70 TAGS)	$ 326.58	51
MARKER, POLE LETTER L, YELLOW REFLECTIVE ON BLACK BGND, 1IN WD X 1IN LG, PRESS SENSITIVE DESTRUCTIVE ADHV, 1 EA IS EQ TO 1 SHEET (70 TAGS)	$ 193.48	31
MARKER, POLE LETTER M, YELLOW REFLECTIVE ON BLACK BGND, 1IN WD X 1IN LG, PRESS SENSITIVE DESTRUCTIVE ADHV, 1 EA IS EQ TO 1 SHEET (70 TAGS)	$ 230.88	37
MARKER, POLE LETTER N, YELLOW REFLECTIVE ON BLACK BGND, 1IN WD X 1IN LG, PRESS SENSITIVE DESTRUCTIVE ADHV, 1 EA IS EQ TO 1 SHEET (70 TAGS)	$ 249.60	40
MARKER, POLE LETTER O, YELLOW REFLECTIVE ON BLACK BGND, 1IN WD X 1IN LG, PRESS SENSITIVE DESTRUCTIVE ADHV, 1 EA IS EQ TO 1 SHEET (70 TAGS)	$ 243.37	39
MARKER, POLE LETTER P, YELLOW REFLECTIVE ON BLACK BGND, 1IN WD X 1IN LG, PRESS SENSITIVE DESTRUCTIVE ADHV, 1 EA IS EQ TO 1 SHEET (70 TAGS)	$ 206.58	33
MARKER, POLE LETTER Q, YELLOW REFLECTIVE ON BLACK BGND, 1IN WD X 1IN LG, PRESS SENSITIVE DESTRUCTIVE ADHV, 1 EA IS EQ TO 1 SHEET (70 TAGS)	$ 193.44	31
MARKER, POLE LETTER S, YELLOW REFLECTIVE ON BLACK BGND, 1IN WD X 1IN LG, PRESS SENSITIVE DESTRUCTIVE ADHV, 1 EA IS EQ TO 1 SHEET (70 TAGS)	$ 193.44	31
MARKER, POLE LETTER T, YELLOW REFLECTIVE ON BLACK BGND, 1IN WD X 1IN LG, PRESS SENSITIVE DESTRUCTIVE ADHV, 1 EA IS EQ TO 1 SHEET (70 TAGS)	$ 193.44	31
MARKER, POLE LETTER U, YELLOW REFLECTIVE ON BLACK BGND, 1IN WD X 1IN LG, PRESS SENSITIVE DESTRUCTIVE ADHV, 1 EA IS EQ TO 1 SHEET (70 TAGS)	$ 193.44	31
MARKER, POLE LETTER V, YELLOW REFLECTIVE ON BLACK BGND, 1IN WD X 1IN LG, PRESS SENSITIVE DESTRUCTIVE ADHV, 1 EA IS EQ TO 1 SHEET (70 TAGS)	$ 174.72	28
MARKER, POLE LETTER W, YELLOW REFLECTIVE ON BLACK BGND, 1IN WD X 1IN LG, PRESS SENSITIVE DESTRUCTIVE ADHV, 1 EA IS EQ TO 1 SHEET (70 TAGS)	$ 193.44	31

Inventory Provided by Affiliate to Duke Energy Kentucky
For the Year Ended December 31, 2008

COMPANY_SOL CATALOG_DESC	Values Sum of SumOfTRANS_AMT	Sum of SumOfTRANS_QTY
MARKER, POLE LETTER X, YELLOW REFLECTIVE ON BLACK BGND, 1IN WD X 1IN LG, PRESS SENSITIVE DESTRUCTIVE ADHV, 1 EA IS EQ TO 1 SHEET (70 TAGS)	$ 193.44	31
MARKER, POLE LETTER Y, YELLOW REFLECTIVE ON BLACK BGND, 1IN WD X 1IN LG, PRESS SENSITIVE DESTRUCTIVE ADHV, 1 EA IS EQ TO 1 SHEET (70 TAGS)	$ 183.03	29
MARKER, POLE LETTER Z, YELLOW REFLECTIVE ON BLACK BGND, 1IN WD X 1IN LG, PRESS SENSITIVE DESTRUCTIVE ADHV, 1 EA IS EQ TO 1 SHEET (70 TAGS)	$ 180.99	29
MARKER, POLE LOGO DUKE ENERGY, BLACK REFLECTIVE ON WHITE BAND, 1IN WD X 1IN LG, PRESS SENS DESTRUCT ADHV, 1 EA IS EQ TO A SHEET (70 TAGS)	$ 487.30	78
MARKER, POLE NUMBER 0, YELLOW REFLECTIVE ON BLACK BGND, 1IN WD X 1IN LG, PRESS SENSITIVE DESTRUCTIVE ADHV, 1 EA IS EQ TO 1 SHEET (70 TAGS)	$ 263.87	41
MARKER, POLE NUMBER 1, YELLOW REFLECTIVE ON BLACK BGND, 1IN WD X 1IN LG, PRESS SENSITIVE DESTRUCTIVE ADHV, 1 EA IS EQ TO 1 SHEET (70 TAGS)	$ 374.40	60
MARKER, POLE NUMBER 2, YELLOW REFLECTIVE ON BLACK BGND, 1IN WD X 1IN LG, PRESS SENSITIVE DESTRUCTIVE ADHV, 1 EA IS EQ TO 1 SHEET (70 TAGS)	$ 406.61	63
MARKER, POLE NUMBER 3, YELLOW REFLECTIVE ON BLACK BGND, 1IN WD X 1IN LG, PRESS SENSITIVE DESTRUCTIVE ADHV, 1 EA IS EQ TO 1 SHEET (70 TAGS)	$ 449.28	72
MARKER, POLE NUMBER 4, YELLOW REFLECTIVE ON BLACK BGND, 1IN WD X 1IN LG, PRESS SENSITIVE DESTRUCTIVE ADHV, 1 EA IS EQ TO 1 SHEET (70 TAGS)	$ 281.68	45
MARKER, POLE NUMBER 5, YELLOW REFLECTIVE ON BLACK BGND, 1IN WD X 1IN HT, PRESS SENSITIVE DESTRUCTIVE ADHV, 1 EA IS EQ TO 1 SHEET (70 TAGS)	$ 434.15	69
MARKER, POLE NUMBER 6, YELLOW REFLECTIVE ON BLACK BGND, 1IN WD X 1IN LG, PRESS SENSITIVE DESTRUCTIVE ADHV, 1 EA IS EQ TO 1 SHEET (70 TAGS)	$ 424.33	68
MARKER, POLE NUMBER 7, YELLOW REFLECTIVE ON BLACK BGND, 1IN WD X 1IN LG, PRESS SENSITIVE DESTRUCTIVE ADHV, 1 EA IS EQ TO 1 SHEET (70 TAGS)	$ 363.69	58
MARKER, POLE NUMBER 8, YELLOW REFLECTIVE ON BLACK BGND, 1IN WD X 1IN LG, PRESS SENSITIVE DESTRUCTIVE ADHV, 1 EA IS EQ TO 1 SHEET (70 TAGS)	$ 362.39	58
MARKER, POLE NUMBER 9, YELLOW REFLECTIVE ON BLACK BGND, 1IN WD X 1IN LG, PRESS SENSITIVE DESTRUCTIVE ADHV, (1) EA IS EQ TO 1 SHEET (70 TAG	$ 269.14	43
MARKER, POLE, LETTER R, YELLOW REFLECTIVE ON BLACK BGND, 1IN WD X 1IN LG, PRESS SENSITIVE DESTRUCTIVE ADHV, 1 EA IS EQ TO 1 SHEET (70 TAGS	$ 199.68	32
MATCHES, SAFETY, BOX, 32 PER BOX 10 BOXES PER PKG.	$ 1,111.77	1,900
MATERIAL, BLACKTOP PATCH, MIXTURE, 50 LB BAG	$ 14,634.09	1,590
MATERIAL, MATERIAL WRAP, POLYETHELENE PLASTIC, 20IN WD X 1000 FT, "GOODWRAPPER FILM"	$ 82.80	6
METER, ELECTRICAL SERVICE, NON-DEMAND, 2S, 320 CL, 240 V, 1 PH, 3 WIRE, 1.0 KWH, 50 AMP, SOLID STATE, KENTUCKY	$ 1,443.20	32
METER, ELECTRICAL SERVICE, NON-DEMAND, 4S, 20 CL, 240 V, 1 PH, 3 WIRE, 1.0 KWH, 2.5 AMP, SOLID STATE, KENTUCKY	$ 1,326.72	16
METER, ELECTRICAL SERVICE, DEMAND, 2S, 200 CL, 240 V, 1 PH, 3 WIRE, 1.0 KWH, 30 AMP, SOLID STATE, KENTUCKY	$ 19,160.92	182
METER, ELECTRICAL SERVICE, DEMAND, 3S, 20 CL, 120 V, 1 PH, 2 WIRE, 1.0 KWH, 2.5 AMP, SOLID STATE, OHIO/INDIANA	$ 515.00	4
METER, ELECTRICAL SERVICE, KWH, DEMAND REACTIVE, TOU, MASS MEMORY, 9S, 20 CL, 120-277 V, 3 PH, 4 WIRE, WYE, 1.8 KWH, 2.5 AMP, PULSE/, KY	$ 6,431.60	40
METER, ELECTRICAL SERVICE, LOAD PROFILE, TOU CAPABLE, MASS MEMORY, DEM, 2S, 320 CL, 240 V, 1 PH, 3 WIRE, 1.0 KWH, 50 AMP, SOLID STATE, KENTU	$ 596.00	4
METER, ELECTRICAL SERVICE, NON-DEMAND AMR SOLID STATE, 2S, 200 CL, 240 V, 1 PH, 3 WIRE, 1.0 KWH, 30 AMP, KENTUCKY	$ 11,529.00	327
METER, ELECTRICAL SERVICE, NON-DEMAND, 2S, 200 CL, 240 V, 1 PH, 3 WIRE, 7.2 KWH, 30 AMP, KY	$ 52,226.99	2,688
METER, ELECTRICAL SERVICE, NON-DEMAND, NETWORK, 12S, 200 CL, 120 V, 1 PH, 3 WIRE, 1.0 KWH, 30 AMP, SOLID STATE, KENTUCKY	$ 5,609.58	96
METER, ELECTRICAL SERVICE, SV3SR, W/MASS MEMORY, MODEM/PULSE CAPABLE,, 5S, 20 CL, 120-240 V, 3 PH, 3 WIRE, DELTA, 1.2 KWH, 2.5 AMP, KENTUCKY	$ 8,970.00	40
METER, ELECTRICAL SERVICE, SV4SR, W/MASS MEMORY, MODEM/PULSE CAPABLE, 16S, 200 CL, 120-277 V, 3 PH, 4 WIRE, WYE, 21.6 KWH, 30 AMP, KENTUCKY	$ 42,086.73	264
METER, ELECTRICAL SERVICE, SV4SR, WITH MASS MEMORY, MODEM/PULSE CAPABLE, 16S, 200 CL, 120-277 V, 3 PH, 4 WIRE, WYE, 21.6 KWH, 30 AMP, OHIO	$ 635.80	4
METER, ELECTRICAL TEST, 600 VDC, LCD, DIGITAL DISPLAY, 600.0/6K OHMS, DC V 600V, AC VOLTAGE 600 V,, AC CURRENT 600A, AUTO RANGE, TRU RMS NO.	$ 407.55	3
METER, ELECTRICAL TEST, CLAMP, 1000A AC/DC, LCD, DIGITAL DISPLAY, 600.0/6K OHMS, DC V 600 VDC,, AC VOLTAGE 600V, AC CURRENT 999.9A, DC CURRE	$ 285.48	1
METER, ELECTRICAL, TESTER, 5-50V	$ 11.90	4
METER, ELECTRICAL, VOLTAGE, 120-600VAC/DC, TESTER VOLTAGE	$ 120.39	5
METER, GAS SERVICE, DIAPHRAGM, 1000, 2 LB PRESSURE TEMP, VISUAL, 25 LBS, 45 LT HUB, RED FACE INDEX, KENTUCKY	$ 2,973.00	6
METER, GAS SERVICE, DIAPHRAGM, 1000, TEMPERATURE COMPENSATED, AMR, 25 LBS, 45 LT HUB, ANSI B-109, KENTUCKY	$ 1,516.65	3
METER, GAS SERVICE, DIAPHRAGM, 1000, TEMPERATURE, BADGER REMOTE, 25 LBS, 45 LT HUB, ANDI B-109, FOR USE IN KENTUCKY	$ 19,222.00	40
METER, GAS SERVICE, DIAPHRAGM, 1000, TERMPERATURE COMPENSATED, VISUAL, 25, 45 LT HUB, ANSI B-109, KENTUCKY	$ 122,962.91	268
METER, GAS SERVICE, DIAPHRAGM, 250 C.F.H., TEMPERATURE COMPENSATED, VISUAL, 5 LBS, 10 LT, ANSI B-109, KENTUCKY	$ 317,836.69	6,767
METER, GAS SERVICE, DIAPHRAGM, 250, 2LB., VISUAL, 5 LBS, 10 LT HUB, ANSI B-109, KENTUCKY-2LB	$ 28,932.42	598
METER, GAS SERVICE, DIAPHRAGM, 250, TEMPERATURE COMPENSATED, A.M.R., 5 LBS, 10 LT HUB, ANSI B-109, KENTUCKY	$ 33,941.04	720
METER, GAS SERVICE, DIAPHRAGM, 250, TEMPERATURE, BADGER REMOTE, 5LB, 10 LT HUB, ANSI B-109, F/USE IN KY	$ 116,723.89	2,125
METER, GAS SERVICE, DIAPHRAGM, 400, TEMPERATURE COMPENSATED, BADGER REMOTE, 10 LBS, 20 LT HUB, ANSI B-109, FOR USE IN KENTUCKY	$ 22,637.20	170
METER, GAS SERVICE, DIAPHRAGM, 425 C.F.H., TEMPERATURE COMPENSATED, VISUAL, 10 LBS, 20 LT HUB, ANSI B-109, KENTUCKY	$ 13,137.07	121
METER, GAS SERVICE, DIAPHRAGM, 425, TEMPERATURE COMPENSATED, A.M.R., 10 LBS, 20 LT HUB, ANSI B-109, KENTUCKY	$ 5,965.20	36
METER, GAS SERVICE, ROTARY, 16M, TEMPERATURE COMPENSATED, VISUAL, 175 LBS MAX, FLANGED, ANSI B-109, KENTUCKY	$ 4,192.00	2
METER, GAS SERVICE, ROTARY, 11M, TEMPERATURE COMPENSATED, VISUAL, 175 LBS MAX, FLANGED, ANSI B-109, KENTUCKY	$ 3,012.00	2
METER, GAS SERVICE, ROTARY, 3 M, TEMPERATURE COMPENSATED, VISUAL, 175 LBS MAX, FLANGED, ANSI B-109, KENTUCKY	$ 7,317.00	9
METER, GAS SERVICE, ROTARY, 5 M, TEMPERATURE COMPENSATED, VISUAL, 175 LBS MAX, FLANGED, ANSI B-109, KENTUCKY	$ 6,094.67	6
METER, GAS SERVICE, ROTARY, 56M, NON-TEMPERATURE COMPENSATED, VISUAL, 175 LBS MAX, FLANGED, ANSI B-109, KENTUCKY	$ 7,038.00	1
METER, GAS SERVICE, ROTARY, 7 M, TEMPERATURE COMPENSATED, VISUAL, 175 LBS MAX, FLANGED, ANSI B-109, KENTUCKY	$ 5,800.20	4
MIRROR, HEAD, 6-1/4 WD X 9-1/4IN LG, RECTANGULAR	$ 97.20	3
MIRROR, INSPECTION, 2-1/8IN WD X 3-1/2IN LG, RECTANGULAR	$ 11.26	2
MITTENS, WINTER, LARGE, LEATHER	$ 161.61	11
MODULE, BALLAST, 120V	$ 29.18	2
MODULE, BALLAST, 230V	$ 27.80	2
MODULE, FIRED LAMP, REPLACEMENT (USED W/ PELICAN MIGHTY LIGHT ONLY)	$ 13.16	4

Inventory Provided by Affiliate to Duke Energy Kentucky
For the Year Ended December 31, 2008

COMPANY_SOL	CATALOG_DESC	Values Sum of SumOfTRANS_AMT	Sum of SumOfTRANS_QTY
	MODULE, LOADBREAK, 15KV, 4 POSITION, W/ MOUNTING STRAPS	$ 5,447.85	57
	MODULE, LOADBREAK, 200A, 4-POSITION	$ (287.94)	-2
	MOLD, THERMAL WELD, THERMITE FURNACE, EXOTHERMIC, FOR USE ON 3/4IN TO 3-1/2IN OD PIPE, GRAPHITE MOLD ASSEMBLED W/ BAFFLE COVER	$ 226.33	6
	MOLD, THERMAL WELD, THERMITE FURNACE, EXOTHERMIC. FOR USE ON 4IN & LARGER OD PIPE, GRAPHITE MOLD, COMES ASSEMBLED W/ BAFFLE	$ 230.40	6
	MOUNT, FUSE, END FITTINGS, SMD-20, 38KV	$ 65.03	1
	MOUNT. FUSE, POWER, 7.2-34.5KV	$ -	0
	MOUNT, FUSE, POWER, CYPOXY INSULATORS, 15KV, TYPE SM-5,DISCONNECT,180 DEG OPENING, VERTICAL	$ 1,355.46	3
	NAIL, BARBED, 2IN LG, 1/8IN THK, GALV STEEL	$ 12.03	132
	NAIL, COMMON, 1-1/2 LG, 11 GAUGE THK, ALUM	$ 175.80	15
	NAIL, ROOFING, 2IN LG, 1/8IN, 11 GAUGE THK, GALV STEEL, BARBED, WITH 7/16IN DIA HD, 156 PER LB	$ 234.07	151
	NIPPLE, PIPE, 1/4IN DIA, 1-1/2IN LG, MNPT, BLACK STEEL, 3000 LB	$ 17.89	7
	NIPPLE, PIPE, SEAMLESS, 4IN DIA, 12IN LG, THD, BLACK STEEL, MAOP 150 PSI LB, A106, 4.500IN OD X .237IN L WALL THICKNESS, SCH 40	$ 28.99	2
	NIPPLE, PIPE, WELDED CLOSE, 1/4IN DIA, 15/16IN LG, THD (18), BLACK CARBON STEEL, 150 LB, ASTM A-53, SCH 40	$ 2.43	6
	NIPPLE, PIPE, WELDED CLOSE, 1IN DIA, 1-1/2IN LG, THD (11-1/2), BLACK CARBON STEEL, ASTM A-53, 1 GR, SCH 40	$ 3.39	5
	NIPPLE, PIPE, WELDED CLOSE, 3/4IN DIA. 1-15/16IN LG, THD (14), BLACK CARBON STEEL, 150 LB, ASTM A-53, 1 GR, SCH 40	$ 3.95	15
	NIPPLE, PIPE, WELDED, 1 1/4IN DIA, 6IN LG, THD, BLACK STEEL, MAOP 150 PSI LB, ASTM A-53. TYPE F GR, SCH 40, 1.660IN O.D. X .140IN WALL THK	$ 82.55	47
	NIPPLE, PIPE, WELDED, 1/2IN DIA, 2-1/2IN LG, THD, BLACK CARBON STEEL, MAOP 150 PSI LB, ASTM A-53, TYPE F GR, 0.840IN O.D. X .109IN WALL THIC	$ 25.52	53
	NIPPLE, PIPE, WELDED, 1/2IN DIA, 2IN LG, THD, BLACK CARB STL, MAOP 300 PSI LB, ASTM A-53, TYPE F GR, .840IN OD X.147IN WALL THK, SCH 80, EXT	$ 25.53	39
	NIPPLE, PIPE, WELDED, 1/2IN DIA, 2IN LG, THD, BLACK CARBON STEEL, MAOP 150 PSI LB, ASTM A-53, TYPE F GR, 0.840IN O.D. X .109IN WALL THICKNES	$ 13.73	38
	NIPPLE, PIPE, WELDED, 1/2IN DIA, 3IN LG, THD, BLACK CARBON STEEL, MAOP 150 PSI LB, ASTM A-53, TYPE F GR, 0.840IN O.D. X 109IN WALL THICKNESS	$ 15.41	37
	NIPPLE, PIPE, WELDED, 1/2IN DIA, 4IN LG, THD, BLACK CARBON STEEL, MAOP 150 PSI LB, ASTM A-53, TYPE F GR, 0.840IN O.D. X .109IN WALL THICKNES	$ 18.21	30
	NIPPLE, PIPE, WELDED, 1/2IN DIA, 6IN LG, THD, BLACK CARBON STEEL, MAOP 150 PSI LB, ASTM A-53, TYPE F GR, 0.840IN O.D. X .109IN WALL THICKNES	$ 25.05	32
	NIPPLE, PIPE, WELDED, 1/4IN DIA, 1-1/2IN LG, THD, BLACK CARBON STEEL, MAOP 150 PSI LB, ASTM A53, TYPE F GR, .540IN O.D. X .088IN WALL THICKN	$ 50.03	98
	NIPPLE, PIPE, WELDED, 1/4IN DIA, 2-1/2IN LG, THD, BLACK CARBON STEEL, MAOP 150 PSI LB, ASTM A-53, N GR, 0.540IN O.D. X .088IN WALL THICKNESS	$ 67.90	106
	NIPPLE, PIPE, WELDED, 1/4IN DIA, 2IN LG, THD, BLACK CARBON STEEL, MAOP 150 PSI LB, ASTM A-53, TYPE F GR, 0.540IN O.D. X .088IN WALL THICKNES	$ 63.02	123
	NIPPLE, PIPE, WELDED, 1/4IN DIA, 2IN LG, THD, BLK CARB STL, MAOP 300 LB, ASTM A-53, TYPE F GR, 0.540IN OD X .119IN WALL THK, SCH 80, EXTRA H	$ 11.98	14
	NIPPLE, PIPE, WELDED, 1/4IN DIA, 3IN LG, MNPT, STEEL, MAOP 150 PSI LB, ASTM A-53, TYPE F GR, .540IN O.D. X .088IN WALL THICKNESS, SCH 40	$ 38.39	59
	NIPPLE, PIPE, WELDED, 1/4IN DIA, 4IN LG, THD, BLACK CARBON STEEL, MAOP 150 PSI LB, ASTM A-53, TYPE F GR, 0.540IN O.D. X .088IN WALL THICKNES	$ 28.21	39
	NIPPLE, PIPE, WELDED, 1/4IN DIA, 6IN LG, THD, BLACK CARBON STEEL, MAOP 150 PSI LB, ASTM A-53, TYPE F GR, 0.540IN O.D. X .088IN WALL THICKNES	$ 45.07	33
	NIPPLE, PIPE, WELDED, 1/8IN DIA, 2-1/2IN LG, THD, BLACK CARBON STEEL, MAOP 150 PSI LB, ASTM A-53, TYPE F GR, .405INO.D.X.068IN WALL THICKNES	$ 5.30	10
	NIPPLE, PIPE, WELDED, 1/8IN DIA, 2IN LG, THD, BLACK CARBON STEEL, MAOP 150 PSI LB, ASTM A-53, TYPE F GR, 0.405IN O.D. X .608IN WALL THICKNES	$ 1.97	4
	NIPPLE, PIPE, WELDED, 1/8IN DIA, 3IN LG, THD, BLACK CARBON STEEL, MAOP 150 PSI LB, ASTM A-53, TYPE F GR, 0.405IN O.D. X .068IN WALL THICKNES	$ 12.82	24
	NIPPLE, PIPE, WELDED, 1-1/2IN DIA, 10-1/2IN LG, THD, BLACK CARBON STEEL, MAOP 150 PSI LB, ASTM A-53, TYPE F GR, 1.900FT O.D. X.145IN WALL TH	$ 5.54	2
	NIPPLE, PIPE, WELDED, 1-1/2IN DIA, 10IN LG, THD, BLACK CARBON STEEL, MAOP 150 PSI LB, ASTM A-53, TYPE F GR, 1.900IN O.D. X .145IN WALL THICK	$ 6.42	2
	NIPPLE, PIPE, WELDED, 1-1/2IN DIA, 11-1/2IN LG, THD, BLACK CARBON STEEL, MAOP 150 PSI LB, ASTM A-53, TYPE F GR, 1.900IN O.D. X .145IN WALL T	$ 6.18	2
	NIPPLE, PIPE, WELDED, 1-1/2IN DIA, 11IN LG, THD, BLACK CARBON STEEL, MAOP 150 PSI LB, ASTM A-53, TYPE F GR, 1.900IN O.D. X .145IN WALL THICK	$ 6.37	2
	NIPPLE, PIPE, WELDED, 1-1/2IN DIA, 12IN LG, THD, BLACK CARBON STEEL, MAOP 150 PSI LB, ASTM A-53, TYPE F GR, 1.900IN O.D. X .145IN WALL THICK	$ 29.48	7
	NIPPLE, PIPE, WELDED, 1-1/2IN DIA, 18IN LG, THD, BLACK CARBON STEEL, MAOP 150 PSI LB, ASTM A-53, TYPE F GR, 1.900IN O.D. X .145IN WALL THICK	$ 22.74	3
	NIPPLE, PIPE, WELDED, 1-1/2IN DIA, 2-1/2IN LG, THD, BLACK CARBON STEEL, 150 LB, ASTM A-53, TYPE F GR, 1.900IN O.D. X .145IN WALL THICKNESS,	$ 97.49	75
	NIPPLE, PIPE, WELDED, 1-1/2IN DIA, 24IN LG, THD, BLACK CARBON STEEL, MAOP 150 PSI LB, ASTM A-53, TYPE F GR, 1.900IN O.D. X .145IN WALL THICK	$ 11.44	1
	NIPPLE, PIPE, WELDED, 1-1/2IN DIA, 36IN LG, THD, BLACK CARBON STEEL, MAOP 150 PSI LB, ASTM A-53, TYPE F GR, 1.900IN O.D. X .145IN WALL THICK	$ 178.15	11
	NIPPLE, PIPE, WELDED, 1-1/2IN DIA, 3IN LG, THD, BLACK CARBON STEEL, MAOP 150 PSI LB, ASTM A-53, TYPE F GR, 1.900IN O.D. X .145IN WALL THICKN	$ 122.20	94
	NIPPLE, PIPE, WELDED, 1-1/2IN DIA, 4-1/2IN LG, THD, BLACK CARBON STEEL, MAOP 150 PSI LB, ASTM A-53, TYPE F GR, 1.900IN O.D. X .145IN WALL TH	$ 21.93	12
	NIPPLE, PIPE, WELDED, 1-1/2IN DIA, 4IN LG, THD, BLACK CARBON STEEL, MAOP 150 PSI LB, ASTM A-53, TYPE F GR, 1.900IN O.D. X .145IN WALL THICKN	$ 24.28	17
	NIPPLE, PIPE, WELDED, 1-1/2IN DIA, 4IN LG, THD, BLK CARB STL, MAOP 300 LB, ASTM A-53, TYPE F GR, 1.900IN O.D.X.200IN WALL THK, SCH 80, EXTRA	$ 4.49	2
	NIPPLE, PIPE, WELDED, 1-1/2IN DIA, 5-1/2IN LG, THD, BLACK CARBON STEEL, MAOP 150 PSI LB, ASTM A-53, TYPE F GR, 1.900IN O.D. X .145IN WALL TH	$ 25.55	12
	NIPPLE, PIPE, WELDED, 1-1/2IN DIA, 5IN LG, THD, BLACK CARBON STEEL, MAOP 150 PSI LB, ASTM A-53, TYPE F GR, 1.900IN O.D. X .145IN WALL THICKN	$ 21.48	12
	NIPPLE, PIPE, WELDED, 1-1/2IN DIA, 6-1/2IN LG, THD, BLACK CARBON STEEL, MAOP 150 PSI LB, ASTM A-53, TYPE F GR, 1.900IN O.D. X .145IN WALL TH	$ 29.02	12
	NIPPLE, PIPE, WELDED, 1-1/2IN DIA. 6IN LG, THD, BLACK CARBON STEEL, MAOP 150 PSI LB, ASTM A-53, TYPE F GR, 1.900IN O.D. X .145IN WALL THICKN	$ 56.40	30
	NIPPLE, PIPE, WELDED, 1-1/2IN DIA, 7-1/2IN LG, THD, BLACK CARBON STEEL, MAOP 150 PSI LB, ASTM A-53, TYPE F GR, 1.900IN O.D. X .145IN WALL TH	$ 44.73	12
	NIPPLE, PIPE, WELDED, 1-1/2IN DIA, 7IN LG, THD, BLACK CARBON STEEL, MAOP 150 PSI LB. ASTM A-53, TYPE F GR, 1.9000IN O.D. X .145IN WALL THICK	$ 39.62	12
	NIPPLE, PIPE, WELDED, 1-1/2IN DIA, 8-1/2IN LG, THD, BLACK CARBON STEEL, MAOP 150 PSI LB, ASTM A-53, TYPE F GR, 1.900IN O.D. X .145IN WALL TH	$ 42.28	12
	NIPPLE, PIPE, WELDED, 1-1/2IN DIA, 8IN LG, THD, BLACK CARBON STEEL, MAOP 150 PSI LB, ASTM A-53, TYPE F GR, 1.900IN O.D. X .145IN WALL THICKN	$ 68.97	22
	NIPPLE, PIPE, WELDED, 1-1/2IN DIA, 9-1/2IN LG, THD, BLACK CARBON STEEL, MAOP 150 PSI LB, ASTM A-53, TYPE F GR, 1.900IN O.D. X .145IN WALL TH	$ 3.82	2
	NIPPLE, PIPE, WELDED, 1-1/2IN DIA, 9IN LG, THD, BLACK CARBON STEEL, MAOP 150 PSI LB, ASTM A-53, TYPE F GR, 1.900IN O.D. X .145IN WALL THICKN	$ 46.17	12
	NIPPLE, PIPE, WELDED, 1-1/4IN DIA, 12IN LG, THD, BLACK CARBON STEEL, MAOP 150 PSI LB, ASTM A-53, TYPE F GR, 1.660IN O.D. X .140IN WALL THICK	$ 119.66	31
	NIPPLE, PIPE, WELDED, 1-1/4IN DIA, 14IN LG, THD, BLACK CARBON STEEL, MAOP 150 PSI LB, ASTM A-53, TYPE F GR, 1.660IN O.D. X .140IN WALL THICK	$ 305.13	34

Inventory Provided by Affiliate to Duke Energy Kentucky
For the Year Ended December 31, 2008

COMPANY_SOL	CATALOG_DESC	Values Sum of SumOfTRANS_AMT	Sum of SumOfTRANS_QTY
	NIPPLE, PIPE, WELDED, 1-1/4IN DIA, 18IN LG, THD, BLACK CARBON STEEL, MAOP 150 PSI LB, ASTM A-53, TYPE F GR, 1.660IN O.D. X .140IN WALL THICK	$ 287.18	39
	NIPPLE, PIPE, WELDED, 1-1/4IN DIA, 2-1/2IN LG, THD, BLACK CARBON STEEL, MAOP 150 PSI LB, ASTM A-53, TYPE F GR, 1.660IN O.D. X .140IN WALL TH	$ 139.20	132
	NIPPLE, PIPE, WELDED, 1-1/4IN DIA, 24IN LG, THD, BLACK CARBON STEEL, MAOP 150 PSI LB, ASTM A=53, TYPE F GR, 1.660IN O.D. X .140IN WALL THICK	$ 207.30	21
	NIPPLE, PIPE, WELDED, 1-1/4IN DIA, 36IN LG, THD, BLACK CARBON STEEL, MAOP 150 PSI LB, ASTM A-53, TYPE F GR, 1.660IN O.D. X .140IN WALL THICK	$ 389.90	28
	NIPPLE, PIPE, WELDED, 1-1/4IN DIA, 3IN LG, THD, BLACK CARBON STEEL, MAOP 150 PSI LB, ASTM A-53, TYPE F GR, 1.660IN O.D. X .140IN WALL THICKN	$ 104.30	100
	NIPPLE, PIPE, WELDED, 1-1/4IN DIA, 4IN LG, RIGHT AND LEFT HAND THD, BLACK CARBON STEEL, MAOP 150 PSI LB, ASTM A-53, TYPE F GR, 1.660IN O.D.	$ 11.54	3
	NIPPLE, PIPE, WELDED, 1-1/4IN DIA, 4IN LG, THD, BLACK CARBON STEEL, MAOP 150 PSI LB, ASTM A-53, TYPE F GR, 1.660IN O.D. X .140IN WALL THICKN	$ 44.80	36
	NIPPLE, PIPE, WELDED, 1-1/4IN DIA, 5IN LG, THD, BLACK CARBON STEEL, MAOP 150 PSI LB, ASTM A-53, TYPE F GR, 1.660IN O.D. X .140IN WALL THICKN	$ 75.92	52
	NIPPLE, PIPE, WELDED, 1-1/4IN DIA, 8IN LG, THD, BLACK CARBON STEEL, MAOP 150 PSI LB, ASTM A-53, TYPE F GR, 1.660IN O.D. X .140IN WALL THICKN	$ 116.20	41
	NIPPLE, PIPE, WELDED, 1IN DIA, 10IN LG, THD, BLACK CARBON STEEL, MAOP 150 PSI LB, ASTM A-53, TYPE F GR, 1.315IN O.D. X .133IN WALL THICKNESS	$ 192.78	74
	NIPPLE, PIPE, WELDED, 1IN DIA, 11IN LG, THD, BLACK CARBON STEEL, MAOP 150 PSI LB, ASTM A-53, TYPE F GR, 1.315IN O.D. X .133IN WALL THICKNESS	$ 110.05	39
	NIPPLE, PIPE, WELDED, 1IN DIA, 12IN LG, THD, BLACK CARBON STEEL, MAOP 150 PSI LB, ASTM A-53, TYPE F GR, 1.315IN O.D. X .133IN WALL THICKNESS	$ 290.92	97
	NIPPLE, PIPE, WELDED, 1IN DIA, 14IN LG, THD, BLACK CARBON STL, MAOP 150 PSI LB, ASTM A-53, TYPE F GR, 1.315IN OD X .133IN WALL THK, SCH 40	$ 266.80	58
	NIPPLE, PIPE, WELDED, 1IN DIA, 18IN LG, THD, BLACK CARBON STEEL, MAOP 150 PSI LB, ASTM A-53, TYPE F GR, 1.315IN O.D. X .133IN WALL THICKNESS	$ 285.58	49
	NIPPLE, PIPE, WELDED, 1IN DIA, 2-1/2IN LG, THD, BLACK CARBON STEEL, MAOP 150 PSI LB, ASTM A-53, TYPE F GR, 1.315IN O.D. X .133IN WALL THICKN	$ 160.14	203
	NIPPLE, PIPE, WELDED, 1IN DIA, 24IN LG, THD, BLACK CARBON STEEL, MAOP 150 PSI LB, ASTM A-53, TYPE F GR, 1.315IN O.D. X .133IN WALL THICKNESS	$ 519.33	68
	NIPPLE, PIPE, WELDED, 1IN DIA, 3-1/2IN LG, THD, BLACK CARBON STEEL, MAOP 150 PSI LB, ASTM A-53, TYPE F GR, 1.315IN O.D. X .133IN WALL THICKN	$ 43.13	45
	NIPPLE, PIPE, WELDED, 1IN DIA, 36IN LG, THD, BLACK CARBON STEEL, MAOP 150 PSI LB, ASTM A-53, TYPE F GR, 1.315IN O.D. X .133IN WALL THICKNESS	$ 1,124.14	106
	NIPPLE, PIPE, WELDED, 1IN DIA, 3IN LG, THD, BLACK CARBON STEEL, MAOP 150 PSI LB, ASTM A-53, TYPE F GR, 1.315IN O.D. X .133IN WALL THICKNESS,	$ 91.57	116
	NIPPLE, PIPE, WELDED, 1IN DIA, 4-1/2IN LG, THD, BLACK CARBON STEEL, MAOP 150 PSI LB, ASTM A-53, TYPE F GR, 1.315IN O.D.X.133IN WALL THICKNES	$ 83.22	71
	NIPPLE, PIPE, WELDED, 1IN DIA, 4IN LG, THD, BLACK CARB STL, EXTRA HVY, MAOP 300 PSI LB, ASTM A-53, TYPE F GR, 1.315IN ODX.179IN WALL THK, SC	$ 223.47	138
	NIPPLE, PIPE, WELDED, 1IN DIA, 4IN LG, THD, BLACK CARBON STEEL, MAOP 150 PSI LB, ASTM A-53, TYPE F GR	$ 96.04	98
	NIPPLE, PIPE, WELDED, 1IN DIA, 5-1/2IN LG, THD, BLACK CARBON STEEL, MAOP 150 PSI LB, ASTM A-53, TYPE F GR, 1.315IN O.D. X .133IN WALL THICKN	$ 57.45	42
	NIPPLE, PIPE, WELDED, 1IN DIA, 5IN LG, THD, BLACK CARBON STEEL, MAOP 150 PSI LB, ASTM A-53, TYPE F GR, 1.315IN O.D. X .133IN WALL THICKNESS,	$ 113.96	99
	NIPPLE, PIPE, WELDED, 1IN DIA, 6-1/2IN LG, THD, BLACK CARBON STEEL, MAOP 150 PSI LB, ASTM A-53, TYPE F GR, 1.315IN O.D. X .133IN WALL THICKN	$ 81.48	38
	NIPPLE, PIPE, WELDED, 1IN DIA, 6IN LG, THD, BLACK CARBON STEEL, 300 LB, ASTM A-53, 1 GR, SCH 80, EXTRA HEAVY	$ 11.34	5
	NIPPLE, PIPE, WELDED, 1IN DIA, 6IN LG, THD, BLACK CARBON STEEL, MAOP 150 PSI LB, ASTM A-53, TYPE F GR, 1.315IN O.D. X .133IN WALL THICKNESS,	$ 101.74	74
	NIPPLE, PIPE, WELDED, 1IN DIA, 7IN LG, THD, BLACK CARBON STEEL, MAOP 150 PSI LB, ASTM A-53, TYPE F GR, 1.315IN O.D. X .133IN WALL THICKNESS,	$ 92.61	41
	NIPPLE, PIPE, WELDED, 1IN DIA, 8IN LG, THD, BLACK CARBON STEEL, MAOP 150 PSI LB, ASTM A-53, TYPE F GR, 1.315IN O.D. X .133IN WALL THICKNESS,	$ 166.52	74
	NIPPLE, PIPE, WELDED, 1IN DIA, 9IN LG, THD, BLACK CARBON STEEL, MAOP 150 PSI LB, ASTM A-53, TYPE F GR, 1.315IN O.D. X .133IN WALL THICKNESS,	$ 101.77	39
	NIPPLE, PIPE, WELDED, 2IN DIA, 12IN LG, THD, BLACK CARBON STEEL, MAOP 150 PSI LB, ASTM A-53, TYPE F GR, 2.375IN O.D. X .154IN WALL THICKNESS	$ 129.16	21
	NIPPLE, PIPE, WELDED, 2IN DIA, 18IN LG, THD, BLACK CARBON STEEL, MAOP 150 PSI LB, ASTM A-53, TYPE F GR, 2.375IN O.D. X .154IN WALL THICKNESS	$ 313.50	27
	NIPPLE, PIPE, WELDED, 2IN DIA, 2-1/2IN LG, THD, BLACK CARBON STEEL, MAOP 150 PSI LB, ASTM A-53, TYPE F GR, 2.375IN O.D. X .154IN WALL THICKN	$ 113.40	70
	NIPPLE, PIPE, WELDED, 2IN DIA, 24IN LG, THD, BLACK CARBON STEEL, MAOP 150 PSI LB, ASTM A-53, TYPE F GR, 2.375IN O.D. X .154IN WALL THICKNESS	$ 391.68	26
	NIPPLE, PIPE, WELDED, 2IN DIA, 36IN LG, THD, BLACK CARBON STEEL, MAOP 150 PSI LB, ASTM A-53, TYPE F GR, 2.375IN O.D. X .154IN WALL THICKNESS	$ 805.51	38
	NIPPLE, PIPE, WELDED, 2IN DIA, 3IN LG, THD, BLACK CARBON STEEL, MAOP 150 PSI LB, ASTM A-53, TYPE F GR, 2.375IN O.D. X .154IN WALL THICKNESS,	$ 115.02	71
	NIPPLE, PIPE, WELDED, 2IN DIA, 4IN LG, THD, BLACK CARBON STEEL, MAOP 150 PSI LB, ASTM A-53, TYPE F GR, 2.375IN O.D. X .154IN WALL THICKNESS,	$ 110.46	57
	NIPPLE, PIPE, WELDED, 2IN DIA, 6IN LG, THD, BLACK CARBON STEEL, MAOP 150 PSI LB, ASTM A-53, TYPE F GR, 2.375IN O.D. X .154IN WALL THICKNESS,	$ 170.86	65
	NIPPLE, PIPE, WELDED, 2IN DIA, 8IN LG, THD, BLACK CARBON STEEL, MAOP 150 PSI LB, ASTM A-53, TYPE F GR, 2.375IN O.D. X .154IN WALL THICKNESS,	$ 257.48	59
	NIPPLE, PIPE, WELDED, 3/4IN DIA, 10IN LG, THD, BLACK CARBON STEEL, MAOP 150 PSI LB, ASTM A-53, TYPE F GR, 1.050IN O.D. X .113IN WALL THICKNE	$ 51.21	27
	NIPPLE, PIPE, WELDED, 3/4IN DIA, 12IN LG, THD, BLACK CARBON STEEL, MAOP 150 PSI LB, ASTM A-53, TYPE F GR, 1.050IN O.D. X .113IN WALL THICKNE	$ 104.12	48
	NIPPLE, PIPE, WELDED, 3/4IN DIA, 18IN LG, THD, BLACK CARBON STEEL, MAOP 150 PSI LB, ASTM A-53, TYPE F GR, 1.050IN O.D. X .113IN WALL THICKNE	$ 108.88	24
	NIPPLE, PIPE, WELDED, 3/4IN DIA, 2-1/2IN LG, THD, BLACK CARBON STEEL, MAOP 150 PSI LB, ASTM A-53, TYPE F GR, 1.050IN O.D. X .113IN WALL THIC	$ 38.93	70
	NIPPLE, PIPE, WELDED, 3/4IN DIA, 24IN LG, THD, BLACK CARBON STEEL, MAOP 150 PSI LB, ASTM A-53, TYPE F GR, 1.050IN O.D. X .113IN WALL THICKNE	$ 243.52	42
	NIPPLE, PIPE, WELDED, 3/4IN DIA, 3-1/2IN LG, THD, BLACK CARBON STEEL, MAOP 150 PSI LB, ASTM A-53, TYPE F GR, 1.050IN O.D. X .113IN WALL THIC	$ 8.50	12
	NIPPLE, PIPE, WELDED, 3/4IN DIA, 36IN LG, THD, BLACK CARBON STEEL, MAOP 150 PSI LB, ASTM A-53, TYPE F GR, 1.050IN O.D. X .113IN WALL THICKNE	$ 570.36	71
	NIPPLE, PIPE, WELDED, 3/4IN DIA, 3IN LG, THD, BLACK CARBON STEEL, MAOP 150 PSI LB, ASTM A-53, TYPE F GR, 1.050IN O.D. X .113IN WALL THICKNES	$ 4.80	15
	NIPPLE, PIPE, WELDED, 3/4IN DIA, 4-1/2IN LG, THD, BLACK CARBON STEEL, MAOP 150 PSI LB, ASTM A-53, TYPE F GR, 1.050IN O.D. X .113IN WALL THIC	$ 10.87	12
	NIPPLE, PIPE, WELDED, 3/4IN DIA, 4IN LG, RIGHT AND LEFT HAND THD, BLACK CARBON STEEL, MAOP 150 PSI LB, ASTM A-53, TYPE F GR, 1.050IN O.D. X	$ 6.68	3
	NIPPLE, PIPE, WELDED, 3/4IN DIA, 4IN LG, THD, BLACK CARBON STEEL, 150 LB, ASTM A-53, TYPE F GR, 1.050IN O.D. X .113IN WALL THICKNESS, SCH 40	$ 7.02	18
	NIPPLE, PIPE, WELDED, 3/4IN DIA, 5-1/2IN LG, THD, BLACK CARBON STEEL, MAOP 150 PSI LB, ASTM A-53, TYPE F GR, 1.050INO.D.X.113IN WALL THICKNE	$ 12.34	12
	NIPPLE, PIPE, WELDED, 3/4IN DIA, 5IN LG, THD, BLACK CARBON STEEL, MAOP 150 PSI LB, ASTM A-53, N GR, 1.050IN OD X .113IN	$ 16.72	21
	NIPPLE, PIPE, WELDED, 3/4IN DIA, 6-1/2IN LG, THD, BLACK CARBON STEEL, MAOP 150 PSI LB, ASTM A-53, TYPE F GR, 1.050INO.D.X.113IN WALL THICKNE	$ 11.06	13
	NIPPLE, PIPE, WELDED, 3/4IN DIA, 6IN LG, THD, BLACK CARBON STEEL, MAOP 150 PSI LB, ASTM A-53, TYPE F GR, 1.050IN O.D.X .113IN WALL THICKNESS	$ 17.00	17
	NIPPLE, PIPE, WELDED, 3/4IN DIA, 6IN LG, THD, BRASS	$ 22.80	4
	NIPPLE, PIPE, WELDED, 3/4IN DIA, 7-1/2IN LG, THD, BLACK CARBON STEEL, MAOP 150 PSI LB, ASTM A-53, TYPE F GR, 1.050INO.D.X.113IN WALL THICKNE	$ 25.61	13
	NIPPLE, PIPE, WELDED, 3/4IN DIA, 7IN LG, THD, BLACK CARBON STEEL, MAOP 150 PSI LB, ASTM A-53, TYPE F GR, 1.050INO.D.X.113IN WALL THICKNESS,	$ 30.24	18

Inventory Provided by Affiliate to Duke Energy Kentucky
For the Year Ended December 31, 2008

COMPANY_SOL CATALOG_DESC	Values Sum of SumOfTRANS_AMT	Sum of SumOfTRANS_QTY
NIPPLE, PIPE, WELDED, 3/4IN DIA, 8IN LG, THD, BLACK CARBON STEEL, MAOP 150 PSI LB, ASTM A-53, TYPE F GR, 1.050IN O.D. X .113IN WALL THICKNES	$ 92.95	55
NIPPLE, PIPE, WELDED, 3/4IN DIA, 9IN LG, THD, BLACK CARBON STEEL, MAOP 150 PSI LB, ASTM A-53, TYPE F GR, 1.050INO.D.X.113IN WALL THICKNESS,	$ 22.24	12
NIPPLE, PIPE, WELDED, 3/8IN DIA, 2-1/2IN LG, THD, BLACK CARBON STEEL, MAOP 150 PSI LB, ASTM A-53, TYPE F GR, SCH 40	$ 7.00	12
NIPPLE, PIPE, WELDED, 3/8IN DIA, 3IN LG, THD, BLACK CARBON STEEL, MAOP 150 PSI LB, ASTM A-53, TYPE F GR, .675IN O.D. X .091IN WALL THICKNESS	$ 4.61	12
NIPPLE, PIPE, WELDED, 3/8IN DIA, 4IN LG, THD, BLACK CARBON STEEL, MAOP 150 PSI LB, ASTM A-53, TYPE F GR, .675IN O.D. X .091IN WALL THICKNESS	$ 5.06	12
NIPPLE, PIPE, WELDED, 3/8IN DIA, 6IN LG, THD, BLACK CARBON STEEL, MAOP 150 PSI LB, ASTM A-53, TYPE F GR, .675IN O.D. X .091IN WALL THICKNESS	$ 10.80	12
NIPPLE, PIPE, WELDED, 3IN DIA, 36IN LG, THD, BLACK CARBON STEEL, MAOP 150 PSI LB, ASTM A-53, TYPE F GR, 3.500IN O.D. X .216IN WALL THICKNESS	$ 24.26	1
NIPPLE, PIPE, WELDED, 3IN DIA, 4IN LG, THD, BLACK CARBON STEEL, MAOP 150 PSI LB, ASTM A-53, TYPE F GR, 3.500IN O.D. X .216IN WALL THICKNESS,	$ 40.50	6
NIPPLE, PIPE, WELDED, 3IN DIA, 8IN LG, THD, BLACK CARBON STEEL, MAOP 150 PSI LB, ASTM A-53, TYPE F GR, 3.500IN O.D. X .216IN WALL THICKNESS,	$ 65.34	6
NIPPLE, PIPE, WELDED, 4IN DIA, 18IN LG, THD, BLACK CARBON STEEL, MAOP 150 PSI LB, ASTM A-53, TYPE F GR, 4.500IN O.D. X .237IN WALL THICKNESS	$ 79.52	3
NIPPLE, PIPE, WELDED, 4IN DIA, 24IN LG, THD, BLACK CARBON STEEL, MAOP 150 PSI LB, ASTM A-53, TYPE F GR, 4.500IN O.D. X .237IN WALL THICKNESS	$ 30.93	1
NIPPLE, PIPE, WELDED, 4IN DIA, 36IN LG, THD, BLACK CARBON STEEL, MAOP 150 PSI LB, ASTM A-53, TYPE F GR, 4.500IN O.D. X .237IN WALL THICKNESS	$ 167.82	5
NIPPLE, PIPE, WELDED, 4IN DIA, 6IN LG, THD, BLACK CARBON STEEL, MAOP 150 PSI LB, ASTM A-53, TYPE F GR, 4.500IN O.D. X .237IN WALL THICKNESS,	$ 67.64	6
NIPPLE, PIPE, WELDED, 4IN DIA, 8IN LG, THD, BLACK CARBON STEEL, MAOP 150 PSI LB, ASTM A-53, TYPE F GR, 4.500IN O.D. X .237IN WALL THICKNESS,	$ 64.44	5
NUT, CHANNEL, 1/2IN DIA, 13 UNC THD, 1-1/4IN SPG, ZINC PLATED STEEL, 1-5/8IN WD CHN, 1/2IN THICKNESS	$ 103.97	136
NUT, CONDUIT LOCK, 3/4IN DIA, ALUM	$ 4.56	12
NUT, EYE, OVAL, 3/4IN DIA, 10 UNC THD, GALV STEEL	$ 198.82	126
NUT, EYE, OVAL, 5/8IN DIA, 11 UNC THD, GALV STEEL	$ 727.89	464
NUT, HEX, 1/2IN DIA, 13 UNC THD, FULL NUT HT, 18-8 SS, 100 EA/BX	$ 318.70	1,682
NUT, HEX, 1/2IN DIA, 13 UNC THD, SILICONE BRONZE, B GR, 100 EA/BX	$ 286.04	700
NUT, HEX, 1/4IN DIA, 20 UNC THD, BRASS, FULL NUT, 100 EA/BX	$ 13.88	200
NUT, HEX, 1/4IN DIA, 20 UNC THD, SILICONE BRONZE, B GR, 100 EA/BX	$ 2.77	36
NUT, HEX, 3/8IN DIA, 16 THD, SILICON BRONZE, 100 EA/BX	$ 22.16	100
NUT, HEX, 3/8IN DIA, 16 UNC-2A THD, 5/16IN HT, SEMI-FINISHED STEEL, 2 GR, 100 EA/BX	$ 1.60	200
NUT, HEX, 5/16IN DIA, 18 UNC-2A THD, 5/16IN HT, BRASS, 2 GR	$ 0.24	5
NUT, HEX, HEAVY, 1/2IN DIA, 13 UNC-2A THD, 1/2IN HT, GALV STEEL, 2 GR, 100 EA/BX	$ 8.00	100
NUT, WING, 3/8IN DIA, 16 UNC-2A THD, 1-3/8IN, 11/16IN, IRON, STD PKG/100 EA/BX	$ 26.97	175
OIL, AIR LUBE, 10 W/NR, 1 PINT BOTTLE, NON FLUID A88 NR	$ 145.47	24
OIL, INDUSTRIAL, ENGINE 2 CYCLE, 6.4 OZ BOTTLE, 50:1 RATIO	$ 88.80	48
OIL, NEATSFOOT, 1 GAL CAN, USED ON LEATHERGOODS	$ 65.53	3
OIL, NEATSFOOT, 8 FL OZ	$ 17.25	5
OIL, THREAD CUTTING, 1 GAL CAN, DARK	$ 16.21	1
OILER, BLUE ENAMEL, 1 GAL, RUBBER, PAINTED GALV STEEL	$ 9.05	1
OILER, CAN, 6 OZ, 6IN FLEXIBLE, STEEL	$ 49.43	5
ORIFICE, REGULATOR, 3/16, SS, 627-627M	$ 36.58	1
O-RING, .859IN ID, 1.137IN OD, .139IN WD, BUNA-N, 212	$ 40.86	60
O-RING, 1.296IN ID, 1.574IN OD, .139IN WD, BUNA N, 219	$ 3.90	60
PAD, CONCRETE, TRANSFORMER BOX, 42IN X 45IN X 4IN, FIBER-CEMENT, PRE CAST	$ 1,704.29	21
PAD, KNEELING, 11IN WD X 17-7/8IN LG, RUBBER AND FOAM, CAUTION: NOT TO BE USED	$ 738.56	36
PAD, MINI-SWITCH BOX, 75IN WD X 48IN LG X 36IN DP, FIBERGLASS	$ 3,425.65	7
PAD, TRANSFORMER BOX, 37-1/2IN WD X 43IN LG X 24IN DP, FIBERGLASS, 1PH,(6) 3/8IN 16THD INSERTS IN TOP SURFACE	$ 4,579.76	28
PAD, TRANSFORMER BOX, 37IN WD X 55IN LG X 36IN DP, FIBERGLASS, W/ (6) 3/8IN -16 THD INSERTS IN TOP SURFACE	$ 766.58	2
PAINT	$ 194.70	6
PAINT, ACRYLIC,ENAMEL, OSHA BLACK, GLOSS, 12 OZ AEROSOL CAN.	$ 5.80	2
PAINT, AEROSOL, CINERGY GREY, SEMI-GLOSS, 6.96 OZ CAN	$ 29.75	4
PAINT, ENAMEL, GRAY, GLOSS, 1 GAL CAN	$ 850.63	37
PAINT, ENAMEL, OSHA WHITE, GLOSS, 12 OZ SPRAY CAN	$ 2.89	1
PAINT, ENAMEL, RED, FLAT, 20 OZ CAN, APWA QUIKMARK	$ 23.52	8
PAINT, ENAMEL, YELLOW, MACHINERY	$ 8.37	1
PAINT, MARKING, ASPHALT BLACK, FLAT, 20 OZ SPRAY CAN	$ 5.71	2
PAINT, MEDIUM GRAY, AEROSOL CAN, SPRAY ON	$ 102.77	36
PAINT, NATIONAL SAFETY WALK SLIP PROOF, LIGHT GRAY, GRIT, 1 GALLON CANS	$ 105.72	4
PAINT, PAVEMENT STRIPING, HIGHWAY YELLOW, 20 OZ. CAN, SOLVENT BASED SPRAY CAN	$ 52.44	12
PAINT, PRIMER, BLACK, FLAT, 1 QT CAN, PETROLEUM BASE COLD	$ 773.69	80
PAINT, RUST PROOF, ACRYLIC ENAMEL, METER GRAY, GLOSS, 12 OZ SPRAY CAN	$ 1,188.76	508
PAINT, SPRAY, RED, FLAT, PRESSURIZED CAN, 17 OZW/INVERT-A-CAP	$ 32.15	12
PAINT, TOUCH UP COMPOUND, GRAY, PVC COATED GALVANIZED STEEL, PINT, EXTERIOR NON-SPRAY W/ BRUSH-TOP	$ 34.50	1

Inventory Provided by Affiliate to Duke Energy Kentucky
For the Year Ended December 31, 2008

COMPANY_SOL CATALOG_DESC	Values Sum of SumOfTRANS_AMT	Sum of SumOfTRANS_QTY
PAINT, TRAFFIC MARKING, WHITE, FLAT, 20 OZ SPRAY CAN, 12 EA/ CASE	$ 455.34	173
PAINT, TRAFFIC MARKING, YELLOW, FLAT, 17 OZ SPRAY CAN	$ 2,142.00	360
PAINT, TRANSFORMER, TRANSFORMER GRAY, GLOSS ACRYLIC ENAMEL, SPRAY CAN	$ 44.75	6
PAINT, TRANSFORMER, TRANSFORMER GREEN, GLOSS ACRYLIC ENAMEL GREEN, SPRAY CAN	$ 49.38	6
PAN, LARGE MATERIAL, 14IN WD X 21-3/8IN LG, RED PLASTIC	$ 325.78	13
PAN, SMALL MATERIAL, 9-7/8IN WD X 15-13/16IN LG, RED PLASTIC	$ 606.98	44
PAPER, TOILET, 4-1/2IN SQ, WHITE, FACIAL QUALITY, 2 PLY, 500 SHEETS	$ 91.51	195
PATCH, WRAPPER, 9IN WD X 150FT LG, WAXED PAPER	$ 4,164.71	104
PEDESTAL, SECONDARY SERVICE, APPROX. 36 IN H X 15 IN W X 10 IN D, POLYETHYLENE, DR GRN (MUNSELL), W/3 IN ANCH FLANGE	$ 3,166.85	68
PICK, HEAD, 7 LB., STEEL	$ 33.26	2
PIN, BLANKET, 10IN LG, WOOD, 7IN JAW OPENING ACCESSORY	$ 244.27	40
PIN, INSULATOR, 24IN OVERALL LG, GALV STL, 7GA, 1IN LEAD THD,11/16IN UPPER HOLE,	$ 55.28	8
PIN, INSULATOR, 5/8IN DIA, 6-1/2IN SL, 1IN DIA, 5IN HT, 1INLEAD THD, FLAT BASE	$ 35.16	12
PIN, LOCK PULLER, .085IN DIA, 3/4IN LG, STEEL	$ 19.91	100
PIPE, CONTINUOUS WELD, 1/2IN NOM, 21FT LG, BLACK CARBON STEEL, ASME SA53, SCH 40, THD AND COUPLED	$ 141.46	42
PIPE, CONTINUOUS WELD, 1IN NOM, 21FT LG, BLACK CARBON STEEL, ASME SA53, SCH 40, THD AND COUPLED	$ 670.20	394
PIPE, CONTINUOUS WELD, 2IN NOM, 21FT LG, BLACK CARBON STEEL, ASME SA53, SCH 40, THD AND COUPLED	$ 659.83	189
PIPE, EXTRUDED, 1/2IN NOM, 1000 FT LG, POLYETHLENE, PE 2406, SDR 7, 100 #, PLAIN	$ 380.78	4,000
PIPE, EXTRUDED, 1-1/4IN CTS NOM, 500 FT LG, POLYETHYLENE PE 2406, SDR 15.3, 56 LB, PLAIN	$ 218.84	1,000
PIPE, EXTRUDED, 1-1/4IN IPS NOM, 500 FT LG, POLYETHLENE, PE 2406, SDR 10, 88 #, PLAIN	$ 3,535.90	8,500
PIPE, EXTRUDED, 12 IN NOM, 40 FT LG, POLYETHYLENE 2406, ASTM D 2513, 64 PSIG, PLAIN, SDR 13.5, E 6500 YELLOW	$ 29,746.52	1,840
PIPE, EXTRUDED, 1IN CTS 0.099IN WALL NOM, 500 FT LG, POLYETHYLENE PE 2406, SDR 11.5, 76 LB, PLAIN	$ 360.36	2,000
PIPE, EXTRUDED, 1IN NOM, 250 FT LG, POLYETHYLENE, PE 2406, SDR 11.5, 76 #, PLAIN	$ 13,423.55	66,000
PIPE, EXTRUDED, 2IN NOM, 250 FT LG, POLYETHYLENE, PE 2406, SDR 11.5, 76 LB, PLAIN	$ 964.18	1,500
PIPE, EXTRUDED, 2IN NOM, 40 FT LG, POLYETHYLENE PE 2406, SDR 11.5, 76 LB, PLAIN	$ 5,306.88	8,840
PIPE, EXTRUDED, 2IN NOM, 500 FT LG, POLYETHYLENE, PE 2406, SDR 11.5, 76 LB, PLAIN	$ 16,044.00	25,500
PIPE, EXTRUDED, 3IN NOM, 40 FT LG, POLYETHYLENE PE 2406, SDR 11.5, 76 LB, PLAIN	$ 4,137.14	3,240
PIPE, EXTRUDED, 4IN NOM, 40 FT LG, POLYETHYLENE PE 2406, SDR 11.5, 76 LB, PLAIN	$ 118,471.16	54,360
PIPE, EXTRUDED, 6IN NOM, 40 FT LG, POLYETHYLENE, PE 2406, SDR 13.5, 64 LB, PLAIN	$ 84,638.58	20,600
PIPE, EXTRUDED, 8IN NOM, 40 FT LG, POLYETHYLENE PE 2406, SDR 13.5, 64 LB, PLAIN	$ 151,028.11	22,320
PIPE, PIPE, 1IN NOM, 20 FT LG, BLACK CARBON STEEL, ASTM-A53XS, X-42, BEVELED, .179IN WALL, COATED, CATEGORY PSL-2	$ 4,929.84	858
PIPE, PIPE, 2IN NOM, DOUBLE RANDOM LG LG, BLACK CARBON STEEL, APL-5L CATEGORY PSL-2, X-42, BEVELED, .154IN WALL, COATED	$ 6,176.51	1,220
PIPE, PIPE, 3IN NOM, DOUBLE RANDOM LENGTH LG, BLACK CARBON STEEL, APL-5L CATEGORY PSL-2, X-42, BEVELED, .188IN WALL, COATED	$ 874.44	126
PIPE, PIPE, 4IN NOM, DOUBLE RANDOM LENGTH LG, BLACK CARBON STEEL, APL-5L CATEGORY PSL-2, X-42, BEVELED, .188IN WALL, COATED	$ 28,663.98	3,632
PIPE, PIPE, 6IN NOM, DOUBLE RANDOM LENGTH LG, BLACK CARBON STEEL, APL-5L CATEGORY PSL-2, X-42, BEVELED, .188IN WALL, COATED	$ 254,281.01	17,231
PIPE, PIPE, 6IN NOM, DOUBLE RANDOM LENGTH LG, CARBON STEEL, APL-5L CATEGORY PSL-2, X-42, BEVELED, .250 WALL	$ 43,325.84	1,964
PIPE, PIPE, 8IN NOM, DOUBLE RANDOM LENGTH LG, BLACK CARBON STEEL, APL-5L CATEGORY PSL-2, X-42, BEVELED, .188IN WALL, COATED	$ 63,327.86	4,405
PIPE, SEAMLESS, 1IN NOM, RANDOM LG, CARBON STEEL, ASME SA106, DOUBLE EXTRA HEAVY, PLAIN	$ 18.76	4
PIPE, SPECIAL PURPOSE, ASH DISPOSAL, 12IN DIA X 6FT LG, DURITE, BEVEL ENDS,SPOOL PC	$ 1,573.00	1
PIPE, SPECIAL PURPOSE, VALVE BOX CASING, 12IN DIA X 13FT LONG, PVC	$ 606.45	3
PIPE, SPECIAL PURPOSE, VALVE BOX CASING, 8IN DIA X 13FT LG, PVC SDR 35, ASTM D3034	$ 1,121.08	15
PIPE, WELDED, 12IN NOM, DBL RAND LGTH 46FT MAX-36FT MIN LG, CARBON STEEL, API-5L PSL-2, X42, BEVELED, .250 WALL FBE	$ 1,771,432.92	87,048
PIPE, WELDED, 12IN NOM, DBL RAND LGTH, 46FT MAX-36FT MIN LG, CARBON STEEL, API-5L-PSL-2, X42, BEVELED, .375 WALL POWERCRETE COATED	$ 343,203.89	7,995
PIPE, WELDED, 12IN NOM, DOUBLE RANDOM LENGTH 46FT MAX-36FT MIN LG, BLACK CARB STL, APL-5L CATEGORY PSL-2, GR, BEVELED, .219IN WALL, COATED	$ 222,291.70	7,176
PIPE, WELDED, 12IN NOM, DOUBLE RANDOM LENGTH 46FT MAX-36FT MIN LG, BLACK CARBON STEEL, API-5L CATEGORY PSL-1, X-42, BEVELED, .375 WALL	$ 1,334.52	44
PIPE, WELDED, 16IN NOM, DOUBLE RANDOM LENGTH 46FT MAX-36FT MIN LG, BLACK CARBON STEEL, APL-5L CATEGORY PSL-2, GRADE X-42, BEVELED, .250IN	$ 3,705.58	127
PLATE, ALUM., POLE HANDHOLE COVER, 4IN X 6IN, ALUM., INCLUDES SET SCREWS	$ 21.82	2
PLATE, BACKING, 2IN WD X 9FT 6IN LG, GRAY PVC	$ 14.67	4
PLATE, BACKING, 3IN WD X 9FT 6IN LG, PVC	$ 60.01	14
PLATE, BACKING, 5IN WD X 9FT 6IN LG, GRAY PVC	$ 6.98	1
PLATE, COVER, 3/8IN X 1 FT 8IN X 5 FT 6IN (SECT MODULE), 6061-T6 AL, 2 -ANGLE	$ 734.00	2
PLATE, COVER, 3/8IN X 1 FT 8IN X 5 FT 6IN (SECT MODULE), 6061-T6AL, 1-ANGLE	$ 577.60	2
PLATE, COVER, 3/8IN X 2 FT 1IN X 5 FT 6IN (SECT. MODULE), 6061-T6 AL, 1 ANGLE	$ 6,366.04	16
PLATE, COVER, 3/8IN X 2FT 6IN X 5 FT 6IN (SECT MODULE), 6061-T6AL, 1-ANGLE	$ 553.33	2
PLATE, COVER, 3/8IN X 2FT 6IN X 5 FT 6IN (SECT MODULE), 6061-T6AL, 2-ANGLE	$ 7,557.16	18
PLATE, COVER, FIBERGLASS, W/(4) PENTA HEAD BOLTS	$ 206.94	2
PLATE, HUB CLOSING, STEEL, 3IN X 3IN CLOSING PLATE, F/1IN TO 2-1/2IN HUB	$ 205.79	120

Inventory Provided by Affiliate to Duke Energy Kentucky
For the Year Ended December 31, 2008

COMPANY_SOL CATALOG_DESC	Values Sum of SumOfTRANS_AMT	Sum of SumOfTRANS_QTY
PLATE, THROTTLE, 2IN, STEEL, 35% RESTRICTION PLATE	$ 1,140.00	4
PLATE, THROTTLE, 3IN, STEEL, 35% DRILLED PLATE	$ 864.00	2
PLATE, THROTTLE, 4IN, STEEL, 100% RESTRICTION PLATE	$ 450.00	1
PLATE, THROTTLE, 6IN, STEEL, 100% RESTRICTION PLATE	$ 903.00	1
PLIERS, ANGLE CUT, 7IN LG	$ 626.51	43
PLIERS, ANGLE CUTTER, 7IN LG, W/ CUSHION HANDLES	$ 121.60	7
PLIERS, DIAGONAL SIDE CUTTING, 5-1/2IN LG, STD PKG/1	$ 100.27	6
PLIERS, FLAT NOSE,W/SIDE CUT AND PLASTIC DIPPED HAND., 6-1/4IN LG, STD PKG/1	$ 80.97	4
PLIERS, GAS AND BURNER, 10IN LG	$ 88.37	3
PLIERS, HIGH LEVERAGE SIDE CUTTING, 9IN LG, PLAIN HANDLE	$ 727.88	34
PLIERS, LG NOSE W/SIDE CUTTERANDPLASTIC DIPPED HANDLES, 6-5/8IN LG, STD PKG/1	$ 278.40	16
PLIERS, LINEMAN, 7IN LG	$ 397.53	18
PLIERS, LOCKING C CLAMP W/REGULAR TIP, 6IN LG, 2IN JAW CAPACITY, ADJUSTING VISE-GRIP	$ 9.10	1
PLIERS, LOCKING CLAMP W/REGULAR TIP, 11IN/ 275MM LG, 3-3/4IN/95MM JAW CAPACITY, ADJUSTING VISE-GRIP	$ 16.50	1
PLIERS, LONG CHAIN NOSE, 6IN LG, STD PKG/6	$ 128.36	10
PLIERS, THIN FLAT NOSE CRESCENT, 6IN LG	$ 7.90	1
PLIERS, TONGUE AND GROOVE, 10IN LG, JAW STRAIGHT, OPENING 2IN	$ 288.26	27
PLIERS, VISE GRIP--STRAIGHT JAW, 7IN (0-1 1/8IN CAPACITY) LG	$ 26.06	3
PLUG, ELECTRICAL, GROUNDING	$ 1,824.86	6
PLUG, ELECTRICAL, STANDOFF, 15K, SHIELDED	$ 1,170.49	33
PLUG, EXPANSION, 3/4IN DIA, RUBBER AND STEEL	$ 165.00	15
PLUG, PIPE, 1/2IN, SQ. HD, THD, BRASS	$ 9.72	12
PLUG, PIPE, 1/2IN, SQUARE HD, THD, FORGED STEEL, 3000 LB LB, PL-003-51	$ 81.00	162
PLUG, PIPE, 1/4IN, SQUARE HD, NPT, BRASS	$ 75.37	24
PLUG, PIPE, 1/4IN, SQUARE HD, THD, BRASS	$ 19.49	144
PLUG, PIPE, 1/4IN, SQUARE HD, THD, FORGED STEEL, 3000 LB LB, PL-003-51	$ 16.40	20
PLUG, PIPE, 1/8IN, SQ HD, THD, STEEL, 300 LB	$ 6.38	12
PLUG, PIPE, 1/8IN, SQUARE HD, THREADED, BRASS	$ 6.50	80
PLUG, PIPE, 1-1/2IN, RUBBER AND STEEL	$ 118.20	52
PLUG, PIPE, 1-1/2IN, SQ HD, THD, MALLABLE IRON, 150 LB	$ 245.97	95
PLUG, PIPE, 1-1/2IN, SQUARE HD, THD, BRASS	$ 180.47	49
PLUG, PIPE, 1-1/2IN, SQUARE HD, THD, FORGED STEEL, 3000 LB, PL-003-51	$ 84.43	21
PLUG, PIPE, 1-1/4IN, RUBBER AND STEEL	$ 168.60	77
PLUG, PIPE, 1-1/4IN, SQUARE HD, THD, SOLID CAST IRON, 150 LB	$ 392.76	205
PLUG, PIPE, 1-1/4IN, SQUARE HD, THD, BRASS	$ 168.63	57
PLUG, PIPE, 1-1/4IN, SQUARE HD, THD, FORGED STEEL, 3000 LB, PL-003-51	$ 215.14	62
PLUG, PIPE, 1IN, HEX HD, THD (11-1/2), STEEL, 3000 LB	$ 14.52	12
PLUG, PIPE, 1IN, SLOTTED HD, EXPANDER, RUBBER AND STEEL	$ 608.30	292
PLUG, PIPE, 1IN, SQUARE HD, THD, BRASS	$ 305.59	152
PLUG, PIPE, 1IN, SQUARE HD, THD, CAST IRON, SOLID	$ 274.85	157
PLUG, PIPE, 1IN, SQUARE HD, THD, FORGED STEEL, 3000 LB, PL-003-51, 55 GR	$ 120.45	79
PLUG, PIPE, 2-1/2IN, SQUARE HD, THD, CAST IRON	$ 60.58	12
PLUG, PIPE, 2-1/2IN, SQUARE HD, THD, FORGED STEEL, 3000 LB, PL-003-51	$ 112.90	10
PLUG, PIPE, 2IN, RUBBER AND STEEL, SAFETY TYPE C, EXPANDER	$ 139.26	50
PLUG, PIPE, 2IN, SQUARE HD, THD, BRASS	$ 354.69	58
PLUG, PIPE, 2IN, SQUARE HD, THD, CAST IRON, 150 LB	$ 559.92	156
PLUG, PIPE, 2IN, SQUARE HD, THD, FORGED STEEL, 3000 LB	$ 477.52	75
PLUG, PIPE, 3/4IN, HEX HD, MNPT, BLACK FORGED CARBON STEEL, 6000 LB LB	$ 2.58	5
PLUG, PIPE, 3/4IN, RUBBER AND STEEL, SAFETY TYPE C, EXPANDER	$ 224.64	117
PLUG, PIPE, 3/4IN, SQUARE HD, MPT, BRASS, HOLLOW	$ 465.48	300
PLUG, PIPE, 3/4IN, SQUARE HD, THD, FORGED STEEL, 3000 LB, PL-003-51	$ 186.70	167
PLUG, PIPE, 3/4IN, SQUARE HD, THD, SOLID MALLEABLE IRON	$ 366.86	243
PLUG, PIPE, 3/8IN, SQUARE HD, THD, FORGED STEEL, 3000 LB, PL-003-51	$ 9.87	12
PLUG, PIPE, 3IN, SQUARE HD, THD (8), CAST IRON, 150 LB	$ 47.62	12
PLUG, PIPE, 3IN, SQUARE HD, THD, FORGED STEEL, 3000 LB, PL-003-51	$ 226.80	12
PLUG, PIPE, 4IN, SQ HD, THD, FORGED STEEL, 2000 LB	$ 76.20	2
PLUG, PIPE, 4IN, WINGED NUT HD, COMPRESSION, RUBBER AND PLASTIC	$ 65.01	8

Inventory Provided by Affiliate to Duke Energy Kentucky
For the Year Ended December 31, 2008

COMPANY_SOL CATALOG_DESC	Values Sum of SumOfTRANS_AMT	Sum of SumOfTRANS_QTY
PLUG, PIPE, 6IN, COMPRESSION, RUBBER AND PLASTIC	$ 20.05	2
PLUG, PIPE, 8IN, WINGED NUT HD, COMPRESSION, RUBBER AND PLASTIC, SCH 40 LB	$ 31.16	2
PLUG, SAFETY GAS, 1-1/4IN DIA., RUBBER AND STEEL, SERVICE, TYPE AU,-SPECIAL	$ 169.37	13
PLUG, SAFETY GAS, 2IN DIA, RUBBER AND STEEL	$ 63.02	3
PLUG, SAFETY GAS, 3/4IN DIA, RUBBER AND STEEL	$ 77.00	7
PLUG, SAFETY, 12IN, WOOD	$ 388.63	4
PLUG, TAPERED, 680IN-720IN X 40MM, BRASS	$ 360.00	30
POLE, LIGHT, POST TOP, 12 FT, ALUM, BLACK FINISH, ROUND FLUTED, ANCHOR BASE POLE, 7IN BOLT CIRCLE,	$ 553.30	1
POLE, LIGHT, POST TOP, 16FT, 12FT MOUNT HEIGHT, FIBERGLASS, BLACK, ROUND STRAIGHT FLUTED DIRECT EMBEDDED, FLUTE STARTS AT 22IN FROM GROUND	$ 1,403.83	4
POLE, LIGHT, STREET LIGHT, 35FT, FIBERGLASS, ROUND TAPERED, 30 FT MOUNTING HGT., DB, LG HAND HOLE,	$ 1,712.00	4
POLE, LIGHT, STREET, 28FT, ALUM, ASPHALT, ROUND TAPERED, 25FT MOUNT HGT, 8FT X 2IN DIA. ARM, IMBEDDED, DIRECT BURIAL TYPE	$ 1,622.88	3
POLE, POWER, LD, 90FT, H9 CL, STEEL, GALVANIZED, 12 SIDED, POLE TYPE DS1	$ 9,358.00	1
POLE, POWER, LD, 90FT, H9 CL, STEEL, GALVANIZED, 12 SIDED, POLE TYPE DS2	$ 9,358.00	1
POLE, POWER, SELF SUPPORTING, 30FT, STEEL, GALVANIZED, TAPERED, 10DEG MAX. CORNER,	$ 2,390.00	1
POLE, POWER, SELF SUPPORTING, 45FT, STEEL, GALVANIZED, TAPERED, 10 DEG MAX CORNER, 3000LB MAX TRANSVERSE LOAD	$ 31,600.00	8
POLE, POWER, SELF SUPPORTING, 50FT, STEEL, GALVANIZED, TAPERED, 10 DEG MAX CORNER, 3000 LB MAX TRANSVERSE LOAD	$ 8,064.00	2
POLE, POWER, UTILITY, 30 FT, 7 CL, SOUTHERN YELLOW PINE, CHROMATED COPPER ARSENATE, ROUND TAPERED, 0.6 PCF	$ 64.17	1
POLE, POWER, UTILITY, 30FT, 1 CL, SOUTHERN YELLOW PINE, CHROMATED COPPER ARSENATE, ROUND TAPERED, 0.6 PCF	$ 1,325.37	9
POLE, POWER, UTILITY, 35 FT, 5 CL, SOUTHERN YELLOW PINE, CHROMATED COPPER ARSENATE, ROUND TAPERED, 0.6 PCF	$ 6,861.08	59
POLE, POWER, UTILITY, 40 FT, 2 CL, SOUTHERN YELLOW PINE, CHROMATED COPPER ARSENATE, ROUND TAPERED, 0.6 PCF	$ 6,656.30	30
POLE, POWER, UTILITY, 40 FT, 4 CL, SOUTHERN YELLOW PINE, CHROMATED COPPER ARSENATE, ROUND TAPERED, 0.6 PCF	$ 38,288.48	200
POLE, POWER, UTILITY, 45 FT, 2 CL, SOUTHERN YELLOW PINE, CHROMATED COPPER ARSENATE, ROUND TAPERED, 0.6 PCF	$ 32,870.91	126
POLE, POWER, UTILITY, 45 FT, 4 CL, SOUTHERN YELLOW PINE, CHROMATED COPPER ARSENATE, ROUND TAPERED, 0.6 PCF	$ 16,027.29	76
POLE, POWER, UTILITY, 50 FT, 2 CL, SOUTHERN YELLOW PINE, CHROMATED COPPER ARSENATE, ROUND TAPERED, 0.6 PCF	$ 26,699.04	87
POLE, POWER, UTILITY, 55 FT, 2 CL, SOUTHERN YELLOW PINE, CHROMATED COPPER ARSENATE, ROUND TAPERED, 0.6 PCF	$ 30,583.65	84
POLE, POWER, UTILITY, 60 FT, 1 CL, SOUTHERN YELLOW PINE, CCA, ROUND, TAPERED, 0.6 PCF	$ 543.09	1
POLE, POWER, UTILITY, 60 FT, 2 CL, SOUTHERN YELLOW PINE, CCA, ROUND, TAPERED, 0.6 PCF	$ 8,563.06	18
POLE, POWER, UTILITY, 65 FT, 1 CL, SOUTHERN YELLOW PINE, CHROMATED COPPER ARSENATE, ROUND TAPERED, 0.6 PCF	$ 910.02	1
POLE, POWER, UTILITY, 65 FT, 2 CL, SOUTHERN YELLOW PINE, CCA, ROUND, TAPERED, 0.6 PCF	$ 4,860.43	6
POLE, POWER, UTILITY, 70 FT, 2 CL, SOUTHERN YELLOW PINE, CCA, ROUND, TAPERED, 0.6 PCF	$ 5,116.35	5
POLE, POWER, UTILITY, 70 FT, H1 CL, DOUGLAS FIR, CREOSOTE, PENTACHLOROPHENOL, ROUND TAPERED	$ 2,236.37	1
POLE, POWER, UTILITY, 75 FT, H2 CL, SOUTHERN YELLOW PINE, CCA, ROUND, TAPERED, 0.6 PCF	$ 6,569.26	2
POLE, POWER, UTILITY, 80 FT, 1 CL, SOUTHERN YELLOW PINE, CREOSOTE, PENTACHLOROPHENOL, CHROMATED COPPER, ROUND TAPERED	$ 8,346.19	3
POLE, POWER, UTILITY, 80 FT, 2 CL, SOUTHERN YELLOW PINE, CCA, ROUND, TAPERED, 0.6 PCF	$ 1,407.37	1
POLE, POWER, UTILITY, 85 FT, 1 CL, SOUTHERN YELLOW PINE, CCA, ROUND, TAPERED, 0.6 PCF	$ 1,920.35	1
POLE, POWER, UTILITY, 85 FT, H1 CL, SOUTHERN YELLOW PINE, CHROMATED COPPER ARSENATE, ROUND TAPERED, 0.6 PCF	$ 12,378.00	5
POLE, POWER, UTILITY, 90 FT, 1 CL, DOUGLAS FIR, CREOSOTE, PENTACHLOROPHENOL, ROUND TAPERED	$ 3,104.82	1
POLE, POWER, UTILITY, 90 FT, 1 CL, SOUTHERN YELLOW PINE, CCA, ROUND TAPERED, 0.6 PCF	$ 4,903.84	2
POLE, POWER, UTILITY, 90 FT, H2 CL, SOUTHERN YELLOW PINE, CHROMATED COPPER ARSENATE, ROUND TAPERED, 0.6 PCF	$ 3,418.08	1
POLE, POWER, UTILITY, 95 FT, 1 CL, SOUTHERN YELLOW PINE, CCA, ROUND, TAPERED, 0.6 PCF	$ 2,513.98	1
POLE, POWER, UTILITY, 95 FT, H1 CL, DOUGLAS FIR, CREOSOTE, PENTACHLOROPHENOL, ROUND TAPERED	$ 4,916.62	1
POLE, STREET LIGHT, 4.9 X 3 DIA X 16FT HT, FIBERGLASS, TOP LUMINAIRE MOUNTING: 12FT	$ 4,837.45	52
POLE, STREET, 27FT-5IN SHAFT LG, 10IN BASE, 6IN TOP, ALUM, SATIN FINISH, BC 13-15IN, ANC.BASE OR BREAKAWAY USE, NO FESTOON PROVISION	$ 840.00	1
POT, POURING, 8IN DIA X 4IN DEPTH, PRESSED STEEL	$ 150.82	4
POUCH, 1325 MOTOROLA RADIO, BLACK NYLON	$ 57.00	2
POUCH, TOOL, SAFETY, 8-1/2IN X 8IN X 4IN, NATURAL CANVAS DUCK, WHITE, DITTY BAG	$ 42.20	4
POWDER, ADHESIVE POWDER, #15 WELD MATERIAL, PLASTIC BOX, F/COPPER TO COPPER & COPPER TO STEEL CONNECTION	$ 406.10	310
POWER SUPPLY, 120/240VAC, 24VDC, 60W, 2.5AMPS., HEAVY DUTY, DIN RAIL MOUNT	$ 121.00	1
POWER SUPPLY, 95-125VAC 50-420HZ	$ 818.50	1
PRESS, SLEEVE, ONE HAND MECHANICAL, HYTOOL	$ 1,833.26	6
PRIMER, SEAL WRAP QUICK DRYING BUTYL MASTIC	$ 205.62	12
PROBE, GAS, 6FT LG, STEEL, NO, WITHOUT	$ 971.81	9
PROTECTOR, HEARING, EAR MUFFS, HEARING PROTECTOR	$ 207.62	27
PROTECTOR, HEARING, EAR MUFFS, OVER THE HEAD STYLE	$ 15.94	1
PROTECTOR, HEARING, EAR PLUG, FOAM	$ 14.00	200
PROTECTOR, HEARING, EAR PLUG, FOAM RUBBER, W/HEAD BAND	$ 55.77	14
PROTECTOR, HEARING, EAR PLUG, IN PILLOW PACK	$ 63.51	730

Inventory Provided by Affiliate to Duke Energy Kentucky
For the Year Ended December 31, 2008

COMPANY_SOL CATALOG_DESC	Values Sum of SumOfTRANS_AMT	Sum of SumOfTRANS_QTY
PROTECTOR, HEARING, EAR PLUGS, ULTRAFIT WITH CORD	$ 354.40	617
PULLER, BARREL LOCK AND SEALING FERRULE, 4-3/4INLG X 1-1/4INDIA, ROTATION PIN DESIGN, HEX HEADED	$ 1,664.00	26
PULLER, FUSE, MEDIUM, PLASTIC, 0-100A, 7-1/2IN LG	$ 15.98	2
PULLER, FUSE, MIDGET, PLASTIC, 34-001, STD PKG/1	$ 5.40	1
PULLER, TUBING ALIGNMENT, 1IN	$ 633.71	8
PUMP, 20IN DELUXE UPRIGHT HAND PUMP, 1-1/4IN X 20IN BARREL, 85 PSI, N/A, N/A, T-HANDLE MANUAL POWER	$ 44.10	6
PUNCH, LOCKING CLAMP, 3/8IN TO 5/8IN, TEMPERED STEEL, CADMIUM PLATED, NARROW SLOT	$ 84.06	2
PURGER, GAS-PE2406, YELLOW, 2IN I.P.S. POLYETHEYLENE PURGE POINT, SDR11	$ 391.01	46
RACK, CAPACITOR, POLE MOUNT, SINGLE, GALV STEEL, 18IN WD, 14IN HT, 7-3/4IN DP, ANGLE	$ 126.00	2
RACK, SECONDARY, 3-1/4IN WD X 34IN LG, GALVANIZED STEEL, FOUR (4) POINT, WIRE SPACING 8IN, EXTENDED & NON-EXTENDED BACK	$ 159.30	8
RACK, SECONDARY, 3-POINT, 3-1/4IN WD. X 21-3/4IN, GALV. STEEL, NON-EXTENDED BACK	$ 3,942.59	269
RACK, SINGLE-POINT, SECONDARY, 4-1/2IN WD X 5-1/2IN LG X 3/16IN THK, GALV STEEL, ASTM A108 GR 1010-1020	$ 5,111.71	637
RAIL, DIN RAIL MOUNTING, 1 METER LENGTH, GALV STL YELLOW CHROMATED	$ 4.63	1
RAINGEAR, BAG, RAINSUIT, NYLON	$ 58.25	10
RAINGEAR, COAT, ELECTRABRITE, MEDIUM, NOMEX/KEVLAR BLEND; FR DURAFLEX COATING, LIME YELLOW, DUKE ENERGY LOGO ON UPPER CHEST AND BACK	$ 143.91	1
RAINGEAR, COAT, ELECTRABRITE, XL, NOMEX/KEVLAR BLEND; FR DURAFLEX COATING, LIME YELLOW, DUKE ENERGY LOGO ON UPPER LEFT CHEST AND BACK	$ 1,087.52	9
RAINGEAR, COAT, ELECTRABRITE, XXL, NOMEX/KEVLAR BLEND; FR DURAFLEX COATING, LIME YELLOW, DUKE ENERGY LOGO ON UPPER LEFT CHEST AND BACK	$ 869.23	7
RAINGEAR, COAT, RAIN, XXXL, LONG, DURAFLEX ON NOMEX/KEVLAR, FLOURESCENT YELLOW-GREEN, REFLECTIVE STRIPES, FLAME RETARD, CHEMICAL	$ 340.74	3
RAINGEAR, COAT, SAFETY, LARGE, NOMEX/KEVLAR BLEND; FR DURAFLEX COATING, LIME YELLOW, DUKE ENERGY LOGO ON UPPER LEFT CHEST AND BACK	$ 553.96	5
RAINGEAR, JACKET, LARGE, PVC/NOMEX/KEVLAR ARCLITE FR RAINGEAR, YELLOW, VENTED BACK W/FULL BODY HARNESS OPENING	$ 143.66	2
RAINGEAR, JACKET, LARGE, PVC/NOMEX/KEVLAR ARCLITE FR RAINGEAR, YELLOW, VENTED BACK W/FULL BODY HARNESS OPENING,	$ 152.86	2
RAINGEAR, JACKET, MEDIUM, PVC/NOMEX/KEVLAR ARCLITE FR RAINGEAR, YELLOW, VENTED BACK W/FULL BODY HARNESS OPENING	$ 143.66	2
RAINGEAR, JACKET, MEDIUM, PVC/NOMEX/KEVLAR ARCLITE FR RAINGEAR, YELLOW, VENTED BACK W/FULL BODY HARNESS OPENING,	$ 135.55	2
RAINGEAR, JACKET, XL, PVC/NOMEX/KEVLAR ARCLITE FR RAINGEAR, YELLOW, VENTED BACK W/FULL BODY HARNESS OPENING	$ 71.83	1
RAINGEAR, JACKET, XL, PVC/NOMEX/KEVLAR ARCLITE FR RAINGEAR, YELLOW, VENTED BACK W/FULL BODY HARNESS OPENING,	$ 305.72	4
RAINGEAR, JACKET, XXL, PVC/NOMEX/KEVLAR ARCLITE FR RAINGEAR, YELLOW, VENTED BACK W/FULL BODY HARNESS OPENING,	$ 80.45	1
RAINGEAR, JACKET, XX-LARGE, YELLOW, DUKE ENERGY LOGO ON UPPER LEFT CHEST AND BACK	$ 18.85	1
RAINGEAR, OVERALLS, BIB, LARGE, PVC/NOMEX, KEVLAR ARCLITE FR RAINGEAR, YELLOW, ADJUSTABLE STRAPS, REFLECTIVE STRIPES ON BOTH	$ 99.94	2
RAINGEAR, OVERALLS, BIBS, LARGE, PVC/NOMEX, KEVLAR ARCLITE FR RAINGEAR, YELLOW, ADJUSTABLE STRAPS, REFLECTIVE STRIPES ON BOTH	$ 145.17	3
RAINGEAR, OVERALLS, BIBS, MEDIUM, PVC/NOMEX, KEVLAR ARCLITE FR RAINGEAR, YELLOW, ADJUSTABLE STRAPS, REFLECTIVE STRIPES ON BOTH	$ 48.64	1
RAINGEAR, OVERALLS, BIBS, XL, PVC/NOMEX/KEVLAR ARCLITE FR, YELLOW, ADJ STRAPS, REFLECTIVE STRIPES ON BOTH LEGS	$ 145.24	3
RAINGEAR, PANT, SMALL, NYLON AND PVC,, YELLOW	$ 11.05	1
RAINGEAR, SUIT, LARGE, YELLOW, JACKET W/DUKE ENERGY LOGO ON UPPER LEFT CHEST	$ 38.79	1
RAKE, GARDEN, 14, 14IN X 6-1/2IN X 2-1/4IN, 58IN HICKORY	$ 46.88	2
RAKE, LAWN, 18, 17-1/2IN X 13-1/2IN X 2IN, 48IN WOOD, COMBINATIONS	$ 22.89	3
RAKE, ROAD, 14-16, 16IN X 1IN X 3-1/4IN, 66IN HICKORY, TRUE TEMPER	$ 446.77	11
RAZOR, JACKET CUTTER	$ 105.61	4
RECEPTACLE, ELECTRICAL, DEADEND, 15KV, SHIELDED	$ 5,707.26	329
RECEPTACLE, ELECTRICAL, GFCI GROUND FAULT, 2, 3, 20A 125V AC, IVORY, COMMERCIAL GRADE	$ 1,496.32	112
RECLOSER, OIL, 14.4KV, 100A, 2A (FAST) - 2D (RETARDED), 4000A INTERRUPTING	$ 4,507.24	3
RECLOSER, OIL, 14.4KV, 140A, 2A(FAST)-2D (RETARDED), 4000A INTERRUPTING	$ 27,328.82	16
RECLOSER, OIL, 14.4KV, 200A, 2A (FAST)- 2D (RETARDED), 4000A INTERRUPTING	$ 51,955.39	30
RECLOSER, VACUUM, DROPOUT, 14.4 KV, 100A, 1(FAST)-1(SLOW), 4KA INTERRUPT,CUTOUT	$ 1,254.85	1
REDUCER, CLUSTER BUSHING STUD, 1IN X 5/8IN, THD, ALUM, THD, SPLIT	$ 151.90	49
REDUCER, PIPE, 6IN X 4IN, BW, CARBON STEEL, STANDARD LB	$ 303.93	12
REDUCER, PIPE, CONCENTRIC, 1/2 X 1/4, NPT, MALLABLE IRON, 150 LB	$ 20.30	20
REDUCER, PIPE, CONCENTRIC, 12 IN X 8 IN, BUTT FUSION, POLYETHYLENE, PE 3408, 64 PSIG LB, ASTM D 2513, SDR 13.5 X SDR 13.5 GR, FABRICATED	$ 2,345.32	8
REDUCER, PIPE, CONCENTRIC, 12IN X 4IN, BW, CARBON STEEL, 150 LB, ASME SA234, B GR	$ 2,769.36	5
REDUCER, PIPE, CONCENTRIC, 12IN X 6IN, BW, CARBON STEEL, SCH 20 LB, ASME SA234, B GR	$ 1,191.56	5
REDUCER, PIPE, CONCENTRIC, 12IN X 8IN, BW, CARBON STEEL, SCH 20 LB, ASME SA234, B GR	$ 377.74	2
REDUCER, PIPE, CONCENTRIC, 16IN X 12IN, BW, CARBON STEEL, SCH 20, .312 WALL LB, ASME A234, B GR	$ 658.76	2
REDUCER, PIPE, CONCENTRIC, 2 X 1-1/4IN, BUTT FUSION, POLYETHYLENE, 80 LB, ASTM2513, SDR11 GR, IAPMO	$ 22.99	8
REDUCER, PIPE, CONCENTRIC, 2IN X 1IN, BW, CARBON STEEL, ASME SA234, B GR, STANDARD	$ 20.75	3
REDUCER, PIPE, CONCENTRIC, 3IN X 2IN, BUTT FUSION, POLYETHYLENE, 80 LB, ASTM 2513, SDR 11 GR, IAPMO	$ 15.77	4
REDUCER, PIPE, CONCENTRIC, 3IN X 2IN, BW, CARBON STEEL, STANDARD LB, ASME SA234, B GR	$ 19.88	2
REDUCER, PIPE, CONCENTRIC, 4 X 2, BUTT FUSION, POLYETHYLENE, 80 LB, ASTM 2513, SDR11 GR, IAPMO	$ 135.54	27
REDUCER, PIPE, CONCENTRIC, 4IN X 2IN, BW, CARBON STEEL, STANDARD LB, ASME SA234, B GR	$ 40.92	3

Inventory Provided by Affiliate to Duke Energy Kentucky
For the Year Ended December 31, 2008

COMPANY_SOU	CATALOG_DESC	Values Sum of SumOfTRANS_AMT	Sum of SumOfTRANS_QTY
	REDUCER, PIPE, CONCENTRIC, 4IN X 3IN, BUTT FUSION, POLYEHTYLENE, 80 LB, ASTM 2513, SDR 11 GR, IAPMO	$ 86.10	15
	REDUCER, PIPE, CONCENTRIC, 4IN X 3IN, BW, CARBON STEEL, ASME SA234, B GR	$ 6.75	1
	REDUCER, PIPE, CONCENTRIC, 6IN X 3IN, BW, CARBON STEEL, STANDARD LB, ASME SA234, B GR	$ 30.93	1
	REDUCER, PIPE, CONCENTRIC, 6IN X 4IN, BUTT, POLYETHYLENE, 64 LB, ASTM 2513, DR 13.5 X DR 11.5 GR, IAPMO	$ 415.79	30
	REDUCER, PIPE, CONCENTRIC, 8IN X 4IN, BW, CARBON STEEL, SCH 20 INLET, STD OUTLET LB, ASME SA234, B GR	$ 1,320.99	11
	REDUCER, PIPE, CONCENTRIC, 8IN X 6IN, BUTT FUSION, POLYETHYLENE, PE2406, 64 LB, ASTM2513, SDR13.5XSDR13.5 GR, YELLOW	$ 368.55	15
	REDUCER, PIPE, CONCENTRIC, 8IN X 6IN, BW, CARBON STEEL, SCH 20 LB, ASME SA234, B GR	$ 257.21	2
	REDUCER, SOLDER JOINT, 1IN X 3/4IN, SOLDER, WROUGHT COPPER	$ 1.90	1
	REDUCER, SOLDER JOINT, 3/4IN SOLDER X 1IN MNPT, SOLDER X THREADED, WROUGHT COPPER	$ 69.65	14
	REEL, CABLE, 48IN FLANGE, 28IN TRAVERSE, MFG SPECFIC INFO, HANDLING COILS OF 600V UNDERGROUND CABLE	$ 394.74	1
	REFRACTOR	$ 129.04	4
	REFRACTOR, II, BUROSILICATE PRISMATIC GLASS, 175W, OUTDOOR LUMINAIRE	$ 2,417.76	16
	REFRACTOR, TYPE III, GRANVILLE LUMINAIRE, GLASS GLOBE, 100-175W, GLOBE WITH 5IN BLK FINIAL	$ 172.00	1
	REFRACTOR, V, ACRYLIC, OPTICAL ASSEMBY COMPLETE W/REFLECTOR, AND TYPE V ACRYLIC REFRACTOR	$ 41.40	4
	REGULATOR, GAS, 1-1/2IN, NFPT, 3/8IN, 8IN WATER COLUMN, KENTUCKY	$ 7,372.20	31
	REGULATOR, GAS, 1-1/2IN, NFPT, 1/2IN IM, 8IN WATER COLUMN, KENTUCKY	$ 158.71	1
	REGULATOR, GAS, 1-1/2IN, NFPT, 1/2IN, 8IN, KENTUCKY	$ 1,425.61	4
	REGULATOR, GAS, 1-1/2IN, NFPT, 1/4IN, 8IN WATER COLUMN, KENTUCKY	$ 11,740.94	43
	REGULATOR, GAS, 1-1/2IN, NPT, 3/8IN, 1 PSIG, KENTUCKY	$ -	0
	REGULATOR, GAS, 1-1/4IN X 1-1/4IN, FPT, 1/4IN, 2 LBS, KENTUCKY	$ 345.60	10
	REGULATOR, GAS, 1-1/4IN X 1-1/4IN, FPT, 3/16IN, 8IN WATER COLUMN, F/USE KENTUCKY	$ 463.20	16
	REGULATOR, GAS, 1IN X 1IN, FPT, 3/16IN, 8IN WATER COLUMN, KENTUCKY	$ 13.45	1
	REGULATOR, GAS, 1IN, FPT, 1/4IN, 15 PSIG, KENTUCKY	$ 559.56	6
	REGULATOR, GAS, 1IN, FPT, 1/4IN, OHIO/15 PSIG	$ 252.68	2
	REGULATOR, GAS, 1IN, FPT, 1/8IN, 15 PSIG, KENTUCKY	$ 20,333.33	162
	REGULATOR, GAS, 2 ", FLANGED, 1/2IN, 5 PSIGS. GREEN MAIN SPRING, CAST IRON & ALUM., FOR USE IN KENTUCKY	$ 523.12	1
	REGULATOR, GAS, 2 INCH, NPT, 3/4IN INCH, 1 PSIG, CAST IRON, FOR USE IN KENTUCKY	$ 568.33	1
	REGULATOR, GAS, 2IN AMERICAN RELIEF, MOUNTED BETWEEEN ANSI 150 FLANGES, 50% CAPACITY W/ H5 SLEEVE, 0 PSIG, ZSC-150 PILOT, 10-75 SPRING, COMP	$ 6,673.17	5
	REGULATOR, GAS, 2IN WITH 2R10 CLOSURE. MOUNTED BETWEEN ANSI CLASS 150 FLANGES, REDUCED TO 10% OPEN W/ H5 SLEEVE, 0 PSIG OUTLET, CARBON STEEL	$ 1,339.99	1
	REGULATOR, GAS, 2IN X 1IN, 2IN ANSI CL 300 (720 WOG) FLANGED ENDS, 35% GRID W/75 DURO DIAPHRAM, SERIES 20 PILOT (25-90 PSI SPRING), TYPE 24	$ 1,575.00	1
	REGULATOR, GAS, 2IN X 1IN, ANSI 300 PSIG, 50% GRID 75 DURO DIAGPHRAM STANDARD SPRING, SERIES 20 PILOT, 10 TO 40 SPRING, TYPE 24, RESTRICTOR,	$ 3,150.00	2
	REGULATOR, GAS, 2IN X 1IN, ANSI 300 PSIG, 75% GRID 75 DURO DIAGPHRAM STANDARD SPRING, SERIES 20 PILOT, 10 TO 40 SPRING, TYPE 24, RESTRICTOR,	$ 1,575.00	1
	REGULATOR, GAS, 2IN, 300 PSIG FLANGED BODY, 3/8 WITH DISK ASSEMBLY # 1C4248 X0212, 20 PSIG., STEEL, FOR USE IN KENTUCKY	$ 1,673.64	2
	REGULATOR, GAS, 2IN, ANSI 125 FLANGED, 1IN DOUBLE VALVE BRASS/BUNA-N SEATS, 5 PSIG, CAST IRON, KENTUCKY	$ 1,358.00	1
	REGULATOR, GAS, 2IN, FLANGED, 3/4IN, 2 PSIG, KENTUCKY	$ 523.12	1
	REGULATOR, GAS, 2IN, FLANGES 300 ANSI, 100% GRID, SERIES 20 PILOT 10 TO 40 SPRINGRESTRICTOR, MOUNTED W/ STAINLESS STEEL TUBING	$ 6,960.00	4
	REGULATOR, GAS, 2IN, NFPT, 3/4IN, 8IN WATER COLUMN, KENTUCKY	$ 4,118.34	12
	REGULATOR, GAS, 2IN, NPT, 1/2IN, SET AT 1 PSIG USING BLUE SPRING, KENTUCKY	$ 572.66	1
	REGULATOR, GAS, 2IN, NPT, 3/4IN, SET AT 2 PSIG USING ORANGE SPRING, USING TWO SPRING SEATS AND MONITOR BODY, KENTUCKY	$ 996.44	2
	REGULATOR, GAS, 3/4IN X 1IN, FPT, 3/16IN, 8IN, KENTUCKY	$ 635.70	48
	REGULATOR, GAS, 3/4IN, NPT, 1/4IN, 7- 16IN WC, CAST IRON SPRING LOADED	$ 322.64	1
	REGULATOR, GAS, 3IN, ANSI 300 FLANGED ENDS, 50% SLOTTED SS GRID, 50 PSIG, COATED CARB STL BODY, NITRILE RUBBER	$ 5,202.00	2
	REGULATOR, GAS, 4IN AXIAL FLOW, BOLTED BETWEEN ANSI 150 FLANGES, STANDARD CLOSURE W/ H5L SLEEVE, 16.5IN WC (MONITOR REGULATOR)	$ 2,044.86	1
	REGULATOR, GAS, 4IN SINGLE PORT FLOW GRID, 150 ANSI FLANGED ENDS, 100% GRID, 11IN WC, STEEL BODY, NITRILE RINGS & SEALS, SS TUBING, OHIO	$ 3,786.00	1
	REGULATOR, GAS, 4IN, FLANGED 300 ANSI, 35% GRID 75 DURO DIAPHRAGM STANDARD SPRING, SERIES 20 BRASS PILOT 10-40 SPRING, RESTRICTOR, F/KENTUCK	$ 3,399.00	1
	REGULATOR, GAS, 4IN, TO BE MOUNTED BETWEEN 150# ANSI FLANGES, FULL W/ H-5 SLEEVE, RELIEF VALVE W/ COMPOSITE MANIFOLD BLOCK, ZSC 150 PILOT 10	$ 4,874.36	2
	REGULATOR, GAS, 6IN AXIAL FLOW, SERIES 300, MOUNTED BETWEEN ANSI 150 FLANGES, STAND CLOSURE W/ H5L SLEEVE, 16.5IN, INSPIRATOR CONTROL LOOP	$ 3,946.98	1
	REGULATOR, GAS, 6IN SINGLE PORT FLOWGRID, ANSI 150 FLANGED ENDS, 35% GRID W/ 60 DURO DIAPHRAM, 10IN WATER OUTLET	$ 5,559.00	1
	REGULATOR, PRESSURE, PROPANE, 20 PSI, 20 PSI, BRASS, FNPT LH	$ 277.30	5
	REGULATOR, VOLTAGE, 13200GRDY/7620, 100 AMPS, 76.2 KVA, 1 PH, STEP, W/REMOTELY MOUNTED CONTROL AND	$ 6,525.00	1
	REGULATOR, VOLTAGE, 13200GRDY/7620, 219, 167 KVA, 1 PH, STEP W/REMOTELY MOUNTED CONTROL	$ 26,178.90	3
	REPELLENT, DOG, AEROSOL, 1 1/2 OZ CAN	$ 152.04	42
	REPELLENT, INSECT, AEROSOL, 12 OZ CAN	$ 286.36	76
	REPELLENT, INSECT, CLEAR COLORLESS SPRAY/MIST, 6.5 OZ CAN, DEET-BASED FORMULA	$ 58.98	6
	RESISTOR, 25 OHM, 25WW, SOLDER, CERAMIC	$ 5.70	1
	RESPIRATOR, DISPOSABLE, DUST	$ 224.20	190
	RETAINER, GLASSES, COTTON, BLACK	$ 36.57	23

Inventory Provided by Affiliate to Duke Energy Kentucky
For the Year Ended December 31, 2008

COMPANY_SOL CATALOG_DESC	Values Sum of SumOfTRANS_AMT	Sum of SumOfTRANS_QTY
RETAINER, GOGGLES, RUBBER, NON-CONDUCTIVE	$ 49.44	8
RING, 2IN ID X 1IN WIDE, PVC	$ 34.00	200
RING, METER SEALING, ALUMINUM OR STAINLESS STEEL, SNAP ACTION, PER DRG. #8791-11	$ 1,805.26	1,800
RING, METER SEALING, OVERSIZE, ALUM, SCREW TYPE MILBANK CC 11	$ 24.73	10
RING, SPLIT, 1IN, MALLEABLE IRON, TO HOLD METER BACKETS W 1/4IN FPT	$ 17.18	17
RISER, GAS LINE, 11/4IN MPT X 11/4IN IPS DR 10, POLYETHYLENE TO STEEL TRANSITION, ASTM D 2513	$ 219.24	6
RISER, GAS LINE, 1IN MPT X 1IN CTS STAB W/ BLIND CAP,, POLYETHYLENE TO STEEL TRANSISTION, ASTM D 2513	$ 19,666.74	883
RISER, GAS LINE, 1IN MPT X 1IN CTS, POLYETHYLENE TO STEEL TRANSISTION, ASTM D 2513	$ 1,940.11	105
RISER, GAS LINE, 1IN MPT X 1IN CTS, POLYETHYLENE TO STEEL TRANSITION, ASTM D 2513	$ 79.00	4
RISER, GAS LINE, 2IN MPT X 2INIPS STAB W/BLIND CAP, POLYETHYLENE 2406, TO STEEL TRANSITION, ASTM D 2513,	$ 1,726.06	23
RISER, GAS LINE, 3/4IN MPT X 1/2IN CTS STAB W/BLIND CAP, POLYETHYLENE TO STEEL TRANSITION, ASTM D 2513	$ 263.00	20
RISER, GAS LINE, 3IN FLANGE X 2IN FLANGE X 3IN BUTT FUSION, POLYETHYLENE 2406, TO STEEL TRANSITION, ASTM D 2513, EPOXY COATED GREY	$ 4,700.76	13
RISER, GAS LINE, 4IN FLANGE X 2IN FLANGE X 4IN BUTT FUSION, POLYETHYLENE 2406, ASTM D 2513, EPOXY COATED GREY	$ 869.44	2
RISER, GAS SERVICE, 1-1/4IN MPT X 1-1/4IN IPS STAB W/BLIND CAP, POLYETHYLENE TO STEEL TRANSITION, ASTM D 2513	$ 1,098.40	18
RISER, VALVE BOX, 3IN OD	$ 661.32	24
RISER, VALVE BOX, 6-1/2IN DIA X 4IN DP, CAST IRON	$ 635.52	24
RISER, VALVE BOX, 6-1/4IN DIA X 3IN DP, CAST IRON	$ 530.58	24
RISER, VALVE BOX, 6IN DIA X 3-1/2IN DP, CAST IRON	$ 591.54	24
ROD, ANCHOR, ANCHOR, 1IN DIA, 18IN L, GALV. STEEL, W/TRIPLE THIMBLE EYE	$ 63.19	4
ROD, ANCHOR, EXTENSION, 1IN DIA, 3-1/2IN L, GALV. STEEL, W/COUPLING NUT	$ 365.95	26
ROD, ANCHOR, EXTENSION, 3/4IN DIA, 3-1/2IN L, GALV. STEEL, W COUPLING NUT	$ 34.06	5
ROD, ANCHOR, TRIPLE EYE, 1IN DIA, 7FT L, GALV STEEL, GALV TRIPLEYE NUT T/BE USED W/14IN SCREW ANCHOR, (61AN0116)	$ 7,105.26	393
ROD, ANCHOR, TRIPLE EYE, 1IN DIA, 8 FEET L, GALV STEEL	$ 870.23	35
ROD, ANCHOR, TWIN EYE, 3/4IN DIA, 7FT L, GALV STEEL, 23000 LB	$ 410.31	29
ROD, ANCHOR, TWIN EYE, 3/4IN DIA, 8FT L, GALV STEEL, USE W/61AN0076	$ 715.95	55
ROD, GROUND, 0.50IN FULL, 8FT, COPPER CLAD STL	$ 21.02	3
ROD, GROUND, 0.59IN, 6FT, SCREW TYPE, W/T HANDLE, COPPER ROD	$ 173.07	2
ROD, GROUND, 0.625IN FULL, 8FT, GALVANIZED STL	$ 2,974.32	571
ROD, GROUND, 3/4IN, 10FT, COPPER PLATED STEEL	$ 37.16	9
ROLL, GRINDING, 13-1/2IN ID X 23-1/2IN OD, STEEL	$ 8,007.00	3
ROLLER, INSULATOR, GUY STRAIN, 1-7/8IN DIA X 11/16IN THK, GALV. STEEL	$ 695.69	324
ROPE, DACRON, 1/2IN DIA	$ 2,303.48	14,400
ROPE, POLYESTER OVER POLYPROPYLENE, 3/8IN DIA, WHITE DACRON, ON 1200 FT WOODEN REEL	$ 1,085.24	14,400
RULE, CARPENTER ,FOLDING, 6FT LG X 5/8INWD, WOOD, 1/16IN, WHITE, OUTSIDE READING	$ 28.63	3
RULER, 6 FT X 5/8IN, WOOD, 1/16IN--INSIDE READING, FOLDING, WHITE	$ 401.21	53
SADDLE, PIPE, 1-1/2IN STEEL DIA, MALLEABLE IRON, 1IN OUT, STEEL	$ 523.20	16
SADDLE, PIPE, 1-1/4IN DIA, MALLABLE IRON, 1IN OUT, STEEL	$ 546.39	20
SADDLE, PIPE, 1-1/4IN DIA, MALLABLE IRON, 3/4IN OUT, STEEL, SERVICE SADDLE 89811 CARBON STEEL	$ 139.87	5
SADDLE, PIPE, 12.64IN-14.32IN DIA, DUCTILE IRON, 3IN FNPT OUT, STEEL OR CAST IRON PIPE, DOUBLE STRAPPED SERVICE	$ 1,027.80	9
SADDLE, PIPE, 12IN DIA, DUCTILE IRON, 1-1/2IN OUT, STEEL OR CAST IRON MAIN	$ 207.94	4
SADDLE, PIPE, 12IN DIA, DUCTILE IRON, 2IN OUT, STEEL OR CAST IRON MAIN	$ 129.12	2
SADDLE, PIPE, 12IN DIA, MALLEABLE IRON, 2IN OUT, STEEL	$ 280.24	1
SADDLE, PIPE, 17.4IN-18.88IN DIA, DUCTILE IRON, 2IN FNPT OUT, 16IN CAST IRON PIPE, DOUBLE STRAPPED SERVICE	$ 269.68	2
SADDLE, PIPE, 2IN DIA, MALLEABLE IRON, 1IN OUT, STEEL	$ 358.59	10
SADDLE, PIPE, 2IN DIA, MALLEABLE IRON, 3/4IN OUT, STEEL	$ 275.12	8
SADDLE, PIPE, 3 DIA, MALLABLE IRON, 1IN OUT, CAST IRON	$ 203.40	5
SADDLE, PIPE, 3IN DIA, MALLEABLE IRON, 1-1/2IN OUT, CAST IRON	$ 92.66	2
SADDLE, PIPE, 3IN DIA, MALLEABLE IRON, 1-1/2IN OUT, STEEL	$ 189.00	4
SADDLE, PIPE, 3IN DIA, MALLEABLE IRON, 1-1/4IN OUT, CAST IRON	$ 369.34	8
SADDLE, PIPE, 3IN DIA, MALLEABLE IRON, 1IN OUT, STEEL, SINGLE BOLT, SINGLE HINGE STYLE W/BUNA-N SEALI	$ 496.33	12
SADDLE, PIPE, 3IN DIA, MALLEABLE IRON, 2IN OUT, STEEL	$ 145.14	3
SADDLE, PIPE, 3IN DIA, MALLEABLE IRON, 3/4IN OUT, STEEL	$ 243.66	6
SADDLE, PIPE, 4IN DIA, 1-1/2IN OUT, CAST IRON SERVICE, SADDLE 89745	$ 2,390.40	47
SADDLE, PIPE, 4IN DIA, MALLEABLE IRON, 1-1/2IN OUT, STEEL	$ 2,632.24	52
SADDLE, PIPE, 4IN DIA, MALLEABLE IRON, 1-1/4IN OUT, CAST IRON	$ 374.92	8
SADDLE, PIPE, 4IN DIA, MALLEABLE IRON, 1-1/4IN OUT, STEEL	$ 612.53	13
SADDLE, PIPE, 4IN DIA, MALLEABLE IRON, 1IN OUT, CAST IRON	$ 734.22	16

Inventory Provided by Affiliate to Duke Energy Kentucky
For the Year Ended December 31, 2008

COMPANY_SOL CATALOG_DESC	Values Sum of SumOfTRANS_AMT	Sum of SumOfTRANS_QTY
SADDLE, PIPE, 4IN DIA, MALLEABLE IRON, 1IN OUT, STEEL	$ 1,386.45	30
SADDLE, PIPE, 4IN DIA, MALLEABLE IRON, 2IN OUT, CAST IRON	$ 1,134.97	22
SADDLE, PIPE, 4IN DIA, MALLEABLE IRON, 2IN OUT, STEEL	$ 1,393.34	27
SADDLE, PIPE, 4IN DIA, MALLEABLE IRON, 3/4IN OUT, STEEL	$ 2,390.54	53
SADDLE, PIPE, 6IN DIA, MALLABLE IRON, 1-1/4IN OUT, STEEL	$ 197.20	2
SADDLE, PIPE, 6IN DIA, MALLEABLE IRON, 1-1/2IN OUT, STEEL	$ 988.41	10
SADDLE, PIPE, 6IN DIA, MALLEABLE IRON, 1-1/4IN OUT, CAST IRON	$ 306.80	4
SADDLE, PIPE, 6IN DIA, MALLEABLE IRON, 1IN OUT, CAST IRON	$ 494.06	6
SADDLE, PIPE, 6IN DIA, MALLEABLE IRON, 1IN OUT, STEEL	$ 676.75	7
SADDLE, PIPE, 6IN DIA, MALLEABLE IRON, 2IN OUT, CAST IRON	$ 1,183.35	12
SADDLE, PIPE, 6IN DIA, MALLEABLE IRON, 2IN OUT, STEEL	$ 3,865.84	39
SADDLE, PIPE, 6IN DIA, MALLEABLE IRON, 3/4IN OUT, STEEL	$ 1,400.48	15
SADDLE, PIPE, 6IN DIA, POLYETHYLENE, 4IN OUT, POLYETHYLENE, ELECTROFUSION BRANCHING SADDLE	$ 730.35	10
SADDLE, PIPE, 6IN IPS DIA, POLYETHYLENE, NO OUTLET OUT, POLYETHYLENE, ELECTROFUSION REPAIR SADDLE	$ 465.68	8
SADDLE, PIPE, 8IN DIA, MALLEABLE IRON, 1IN OUT, STEEL	$ 443.28	3
SADDLE, PIPE, 8IN DIA, MALLEABLE IRON, 2IN OUT, CAST IRON	$ 1,203.20	8
SADDLE, PIPE, 8IN DIA, MALLEABLE IRON, 2IN OUT, STEEL	$ 759.87	5
SADDLE, PIPE, 8IN DIA, POLYETHYLENE, 4IN OUT, POLYETHYLENE, ELECTROFUSION BRANCHING SADDLE	$ 805.00	7
SAW, CROSSCUT, 26IN LG, 7PT 8-POINT SILVER STEEL, MITER FEATURE,	$ 22.05	3
SAW, CURVED BLADE, PRUNING, 24IN LG, 4 1/2 PNTS PER IN, HARDWOOD HANDLE	$ 101.93	4
SAW, HACKSAW, 12IN HIGH TENSION, FRAME	$ 772.17	35
SAW, HOLE, 1-1/2IN X 1-1/2IN CUTTING DEPTH, REQUIRED SEPARATELY, BI-METAL	$ 70.08	16
SAW, HOLE, 1-1/8IN X 1-1/2IN CUTTING DEPTH, REQUIRED SEPARATELY, BI-METAL	$ 44.44	11
SAW, HOLE, 1-3/4IN X 1-1/2IN CUTTING DEPTH, REQUIRED SEPARATELY, BI-METAL	$ 105.00	20
SAW, HOLE, 1-7/8IN X 1-1/2IN CUTTING DEPTH, REQUIRED SEPARATELY, BI-METAL	$ 89.08	17
SAW, HOLE, 2-1/4IN X 1-1/2IN CUTTING DEPTH, REQUIRED SEPARATELY, BI-METAL	$ 64.53	10
SAW, HOLE, 2-3/4IN X 1-1/2IN CUTTING DEPTH, REQUIRED SEPARATELY, BI-METAL	$ 57.11	8
SAW, HOLE, 3-1/2IN X 1-1/2IN CUTTING DEPTH, REQUIRED SEPARATELY, BI-METAL	$ 26.74	4
SAW, HOLE, 3-1/4IN X 1-1/2IN CUTTING DEPTH, REQUIRED SEPARATELY, BI-METAL	$ 36.00	5
SAW, HOLE, 3IN/76MM X 1-1/2IN CUTTING DEPTH, REQUIRED SEPARATELY, BI-METAL	$ 43.98	6
SAW, HOLE, 4-1/4IN X 1-1/2IN CUTTING DEPTH, REQUIRED SEPARATELY, BI-METAL	$ 63.02	4
SAW, HOLE, 4IN X 1-1/2IN CUTTING DEPTH, REQUIRED SEPARATELY, BI-METAL	$ 18.87	2
SAW, HOLE, 5-1/2IN X 1-1/2IN CUTTING DEPTH, REQUIRED SEPARATELY, BI-METAL	$ 59.75	2
SAW, HOLE, 7/8IN X 1-1/2IN CUTTING DEPTH, REQUIRED SEPARATELY, BI-METAL	$ 116.56	31
SAW, HOLE, 9/16IN X 1-1/2IN CUTTING DEPTH, REQUIRED SEPARATELY, BI-METAL	$ 74.25	15
SAW, PRUNING, 13IN LG, SPRING TEMPERED STL	$ 114.84	4
SAW, PRUNING, 26IN LG, SILVER PLATED STL, CURVED BLADE,PULL CUT	$ 73.00	2
SCRAPER, 2IN IPS, POLYETHYLENE, ELECTROFUSION	$ 2,247.91	5
SCRAPER, MAIN, 4IN IPS, POLYETHYLENE, ELECTROFUSION	$ 1,379.71	3
SCRAPER, PIPE FWZ, WOOD HANDLE, FOR CLEANING POLYETHYLENE PIPE	$ 1,171.47	34
SCRAPER, PLASTIC PIPE, 1INCTS, CARBON STEEL	$ 1,089.60	11
SCRAPER, SCRAPER, 1-1/4IN IPS, POLYETHYLENE, ELECTROFUSION COUPLING	$ 753.36	2
SCRAPER, SCRAPER, 6IN IPS, POLYETHYLENE, ELECTROFUSION	$ 598.13	1
SCREW, CAP, 1/2IN DIA, 13 THD, 1-1/2IN LG, BUTTON HEXAGON-SOCKET, 25 EA/BX	$ 89.38	157
SCREW, CAP, 1/2IN DIA, 13 UNC THD, 1-3/4IN LG, HEX, SILICON BRONZE, B GR, 100 EA/BX	$ 167.15	200
SCREW, CAP, 1/2IN DIA, 13 UNC THD, 1IN LG, HEX, SILICON BRONZE, B GR, 100 EA/BX	$ 49.68	50
SCREW, CAP, 1/2IN DIA, 13 UNC THD, 2-1/2IN LG, HEX, 18-8 SS, ASTM F593 AND A193, 50 EA/BX	$ 618.03	716
SCREW, CAP, 1/2IN DIA, 13 UNC THD, 2-1/2IN LG, HEX, SILICON BRONZE, 50 EA/BX	$ 403.81	283
SCREW, CAP, 1/2IN DIA, 13 UNC THD, 2IN LG, HEX, 18-8 SS, ASTM F593 AND A193, 50 EA/BX	$ 626.79	991
SCREW, CAP, 1/2IN DIA, 13 UNC THD, 2IN LG, HEX, SILICON BRONZE, B GR, 100 EA/BX	$ 535.63	390
SCREW, CAP, 1/2IN DIA, 13 UNC THD, 3IN LG, HEX, SILICON BRONZE, B GR, 100 EA/BX	$ 90.28	40
SCREW, CAP, 1/4IN DIA, 20 UNC THD, 3/4IN LG, HEX, SILICON BRONZE, B GR, 100 EA/BX	$ 5.37	36
SCREW, CAP, 3/4IN DIA, 10 UNC THD, 2-1/2IN LG, HEX, STEEL, SAE J429, 5 GR	$ 18.34	50
SCREW, CAP, 3/8IN DIA, 1-1/4IN LG, HEX, SILCICON BRONZE, 100 EA/BX	$ 198.38	300
SCREW, CAP, 3/8IN DIA, 16 UNC THD, 1-1/4IN LG, BUTTON, SS, 50 EA/BX	$ 3.50	12
SCREW, CAP, 3/8IN DIA, 16 UNC THD, 2-1/2IN LG, HEX, SILICON BRONZE, B GR, 100 EA/BX	$ 54.26	50
SCREW, CAP, 5/8IN DIA, 11 UNC THD, 1-1/2IN LG, HEX, STEEL, 5 GR, 25 EA/BX	$ 52.80	208

Inventory Provided by Affiliate to Duke Energy Kentucky
For the Year Ended December 31, 2008

COMPANY_SOL CATALOG_DESC	Values Sum of SumOfTRANS_AMT	Sum of SumOfTRANS_QTY
SCREW, CAP, 5/8IN DIA, 11 UNC THD, 2IN LG, HEX, STEEL, SAE J429, 5 GR, 25 EA/BX	$ 34.55	140
SCREW, LAG, 1/2IN DIA, FETTER DRIVE THD, 4IN LG, SQUARE, GALV STEEL, PILOT	$ 570.92	1,259
SCREW, LAG, 1/4IN DIA, FETTER DRIVE THD, 2-1/2IN LG, SQUARE, GALV STEEL, GIMLET	$ 14.24	84
SCREW, LAG, 1/4IN DIA, FETTER DRIVE THD, 2IN LG, HEX W/ NEOPRENE WASHER, GALV STEEL, GIMLET	$ 1,524.80	11,626
SCREW, LAG, 3/8IN DIA, FETTER DRIVE THD, 2-1/2IN LG, SQUARE, GALV. STEEL, DRIVE	$ 91.91	206
SCREW, MACHINE, 1/4IN DIA, 20 UNC THD, 1IN LG, ROUND SLOTTED, BRASS, B GR, 100 EA/BX	$ 26.34	200
SCREW, MACHINE, 1/4IN DIA, 20 UNC THD, 3/4IN LG, ROUND SLOTTED, BRASS	$ 14.65	100
SCREW, TAPPING, #12 DIA, 11 THD, 1IN LG, BINDING SLOTTED, ALLOY STEEL, DURAPLATE FINISH, Z, 100 EA/BX	$ 6.83	301
SCREW, TAPPING, #14 DIA, 1-1/2IN LG, PHILLIPS, ZINC PLATED, Z, 100 EA/BX	$ 6.34	200
SCREWDRIVER, CABINET TIP, 10-5/8IN LG, 6IN LG, ROUND, SLOTTED, 3/16IN	$ 28.80	12
SCREWDRIVER, CABINET TIP, 7-1/2IN LG, 4IN LG, ROUND, SLOTTED, 1/8IN, INSTRUMENT	$ 2.00	1
SCREWDRIVER, GENERAL PURPOSE, 11IN LG, 6IN LG, ROUND, PHILLIPS, 3 PT	$ 59.50	17
SCREWDRIVER, GENERAL PURPOSE, 13IN LG, 8IN LG, ROUND, SLOTTED, 3/8IN, NA.	$ 23.56	4
SCREWDRIVER, GENERAL PURPOSE, 5-1/4IN LG, 2IN LG, ROUND, SLOTTED, 3/16IN	$ 10.20	5
SCREWDRIVER, GENERAL PURPOSE, 6-3/4IN LG, 3IN LG, ROUND, PHILLIPS, 1 PNT	$ 25.60	5
SCREWDRIVER, GENERAL PURPOSE, 7-13/16 LG, 3IN LG, ROUND, SLOTTED, 7/32, STD PKG/6	$ 20.04	4
SCREWDRIVER, GENERAL PURPOSE, 8-1/2IN LG, 4IN LG, ROUND, PHILLIPS, #2	$ 156.80	28
SCREWDRIVER, GENERAL PURPOSE, 8-5/8IN LG, 4IN LG, ROUND, SLOTTED, .25	$ 82.98	10
SCREWDRIVER, GENERAL PURPOSE, 8-5/8IN LG, 4IN LG, ROUND, SLOTTED, 1/4IN	$ 39.21	7
SCREWDRIVER, HANDYMAN, 1-1/4IN LG, STD PKG/6	$ 4.24	2
SCREWDRIVER, POCKET, 2IN LG, 1/16IN LG, ROUND, SLOTTED, 3/32IN	$ 1.75	1
SCREWDRIVER, POCKET, 4-3/8IN LG, 2IN LG, ROUND, 1/8IN DIA, 1/8IN WD, CLIP-ON, MUST BE THIN BLADE	$ 1.82	1
SCREWDRIVER, POCKET, 4IN LG, ROUND, SLOTTED, 3/32IN	$ 2.12	1
SCREWDRIVER, STANDARD, 11-1/2IN LG, 6IN LG, SQUARE, SLOTTED, 3/8IN WD,.05OTHK, CLEAR PLASTIC HANDLE	$ 117.54	16
SCREWDRIVER, STANDARD, 11IN LG, 6IN LG, ROUND, SLOTTED, 5/16IN	$ 157.75	56
SCREWDRIVER, STUBBY, 3-1/2IN LG, 1-3/16IN LG, ROUND, PHILLIPS, 1 PT, STD PKG/6	$ 2.78	1
SEAL, CASING END, 6IN X 12IN, TYPE Z-3 STD	$ 324.00	2
SEAL, MECHANICAL	$ 438.08	32
SEAL, METER, .047, ACRYLIC, BLACK,ENDURO, SQUARE BOTTOM, REGULAR HASP, F/ METER TECH USE ONLY	$ 264.00	800
SEAL, METER, 1-5/8IN LG X 3/8IN WD, T-SHAPE, B.T. ALUMINUM, BLUE, KENTUCKY	$ 119.17	1,000
SEAL, METER, 17/32IN DIA X 7/32IN HT, PLASTIC, BLUE, F/USE/KY ONLY/COMMERCIAL	$ 520.00	4,000
SEAL, METER, 3-1/4IN LG X 13/16IN, PLASTIC, PADLOCK, SQ. BOTTOM, .047 GALV STL HASP,	$ 595.99	5,000
SEAL, METER, ACRYLIC, ENDURO, SQUARE BOTTOM, .047 SS REGULAR HASP	$ 5,863.24	34,800
SEAL, METER, PLASTIC, PADLOCK, SQ BOTTOM, .047 GALV STL HASP,YELLOW	$ 639.18	5,300
SEAL, OIL, SINGLE LIP, 1.1250IN ID, 1.7560IN OD, 0.2500IN WD, NITRILE	$ 2.16	1
SEAL, OIL, SINGLE LIP, 2.1250IN ID, 3.5000IN OD, 0.3125IN WD, STEEL	$ 18.70	1
SECTIONALIZER, LINE, 15KV, 1PH, 200A, 320A ACT, 3-COUNT, RESETTABLE, NO CUTOUT	$ 1,053.40	2
SENSOR, LINE POST CURRENT, 15KV, W/ 15FT LEAD	$ 467.84	1
SET, ALLEN WRENCH, KEY HEAD SET UNBRAKO #2 KIT	$ 40.08	8
SET, SOCKET	$ 1,494.40	6
SHACKLE, ANCHOR, 1/2IN, GALV STEEL, 30000 LB, 5/8IN, 1-3/8IN, 2-13/16IN	$ 23.65	4
SHACKLE, ANCHOR, 1IN, STEEL, WLL 8 1/2T, 1IN SCREW PIN, 1-1/2IN, 3-3/4IN, SPRAY PAINTED	$ 23.11	1
SHACKLE, CHAIN, 1/2IN, GALV STEEL, 25000 LB, 9/16IN TO 5/8IN, 3/4IN TO 11/16IN, 2IN	$ 211.31	21
SHANK, ROCK DRILL, 18IN LONG, CARBON STEEL	$ 118.13	2
SHANK, ROCK DRILL, 24IN LONG, CARBON STEEL	$ 146.70	2
SHANK, ROCK DRILL, 30IN LONG, CARBON STEEL, STD PKG/1	$ 67.60	1
SHEATH, TREE TRIMMER SAW, LEATHER, SCABBARD, CURVED LEATHER	$ 48.22	1
SHEET, 3/4IN X 20 GA X 10FT, PERFORATED IRON, ZINC PLATED, 24 GAUGE ACCEPTABLE	$ 263.98	240
SHIELD, ROCK SHIELD, 5FT W X 100FT L, POLYETHYLENE	$ 1,785.00	5
SHIELD, SAFETY EQUIPMENT, FACE, 8IN X 11-1/4IN, CLEAR	$ 2.37	1
SHIELD, SAFETY EQUIPMENT, FACE, 9IN X 15IN, CLEAR	$ 4.15	1
SHIELD, SAFETY EQUIPMENT, FACE, CLEAR, MODEL SHCL COMPLETE WITH G-211-13R MONO GOGGLES	$ 85.68	4
SHOVEL, DUCK BILL SPADE, 5-1/2IN WD X 14IN LG, CARBON STEEL, SHORT D, WOODEN D TYPE HANDLE, UNION FORK (EMERGENCY ALTERNATE)	$ 518.57	19
SHOVEL, ROUND POINT, 8-1/2IN WD X 11-1/4IN LG, CARBON STEEL, SHORT D	$ 62.85	3
SHOVEL, ROUND POINT, 8-3/4IN WD X 11-1/4IN LG, CARBON STEEL, 47IN STRAIGHT HICKORY, 5 FT SHOVEL	$ 2,185.97	75
SHOVEL, ROUND POINT, 9IN WD X 12-1/2IN LG X 1/16IN THK, CARBON STEEL, 10FT HICKORY, DIGGING SHOVEL	$ 332.89	4
SHOVEL, ROUND POINT, STEEL REINFORCED F.G., 48IN	$ 162.12	6

Inventory Provided by Affiliate to Duke Energy Kentucky
For the Year Ended December 31, 2008

COMPANY_SOL CATALOG_DESC	Values Sum of SumOfTRANS_AMT	Sum of SumOfTRANS_QTY
SHOVEL, SEWER, 5IN WIDE, STEEL, 20IN FIBERGLASS D, STD PKG/1	$ 30.04	1
SHOVEL, SQUARE POINT, 8-1/2IN WD X 11-1/4IN LG, CARBON STEEL, SHORT D	$ 24.67	1
SHOVEL, SQUARE POINT, CARBON STEEL, STRAIGHT HICKORY, LIGHTWEIGHT W/TURNED STEP	$ 517.40	25
SHOVEL, TRENCH, 5IN, STEEL, FIBERGLASS, 48IN STEEL REINFORCED HANDLE	$ 469.12	16
SIGN, TRAFFIC, LED CHEVRON MAT, 19IN X 45IN, PLASTIC, RED W/ LED LIGHTS, REFLECTIVE TAPE, COMES WITH -	$ 2,200.00	32
SIGN, TRAFFIC, ROAD WORK AHEAD, 36IN SQ, VINYL, BLK LETTERS ON REFLECTIVE, HIGH INTENSITY, ROLL-UP	$ 1,461.48	19
SIGN, TRAFFIC, STOP AND SLOW, 18IN OCTAGON SHAPE, PLASTIC, HAND HELD PADDLE, W/ 2IN X 81IN TWO-PIECE PLASTIC STAFF & CONNECTOR	$ 25.63	1
SIGN, WARNING - NATURAL GAS PIPELINE, DUKE ENERGY, 3.5IN DIA X 6FT LG, WHITE PE POST/ANCHOR, REPLACEABLE 18IN SLIP-ON	$ 17,354.05	1,253
SIGN, WARNING, DUKE ENERGY, 2-1/2IN ID X 3-1/2IN OD X 7FT, ASB POLYMER RESIN OR POLYPROPYLENE, F/PROPANE PIPELINE MARKING	$ 925.50	50
SIGN, WARNING-NATRUAL GAS PIPELINE, DUKE ENERGY, 2-1/2" ID X 3-1/2" OD X 7FT LG, ASB POLYMER RESIN COMPOUND OR POLYPROPYLENE, BLACK LETTERS	$ 1,493.94	63
SLEEVE, CADWELD, 12 GAUGE, COPPER, 11.75 LBS PER LENGTH, 100 PER BOX	$ 187.63	610
SLEEVE, COUPLING, 2IN WELDING REINFORCING, STEEL	$ 447.12	2
SLEEVE, COUPLING, 4IN WELD REINFORCING, STEEL	$ 281.78	1
SLEEVE, COUPLING, WELDING REINFORCING 24IN, STEEL	$ (3,070.80)	-4
SLEEVE, COUPLING, WELDING REINFORCING 6IN, STEEL	$ 1,163.04	3
SLEEVE, COUPLING, WELDING REINFORCING 8IN, STEEL	$ 930.53	2
SLEEVE, COUPLING, WELDING REINFORCING, STEEL, 12IN	$ -	0
SLEEVE, COUPLING, WELDING REINFORCING, STEEL, SIZE-2IN	$ 679.53	5
SLEEVE, DISCONNECT, PLASTIC, SLIP ON	$ 1,949.71	27,888
SLEEVE, GROUND ENCLOSURE, 30IN X 26IN X 18IN, STEEL	$ 500.00	4
SLEEVE, GROUND ENCLOSURE, 64IN WD X 26IN HT X 24IN DP, STEEL, 2 SM AND 2 LG SECTIONS W HARDWARE	$ 851.00	4
SLING, TRANSFORMER, 1/2IN	$ 144.82	5
SLING, TRANSFORMER, 1/2IN, POLY PLUS	$ 82.74	2
SLING, TRANSFORMER, 5/8IN X 24IN TO 48IN ADJ, 2,160 LBS WORKING LOAD	$ 61.64	2
SLING, WEB, ENDLESS LOOP, NYLON, 1IN WD X 40IN, 6200 LB VERTICAL, 4900 LB CHOKER, 12400 LB BASK, STD PKG/1	$ 230.46	23
SLING, WEB, ENDLESS LOOP, NYLON, 1IN WD X 4FT, 6400 LB VERTICAL, 5120 LB CHOKER, 12800 LB BASK, STD PKG/1	$ 250.50	25
SLING, WEB, ENDLESS LOOP, NYLON, 1IN WD X 5FT, WEAR FLEX,(60IN)	$ 340.85	30
SLING, WEB, FLAT EYE, NYLON HEAVY WEBBING, 4FT, 1600 LB, 2 PLY	$ 17.69	2
SLING, WEB, FLAT EYE, NYLON, 2IN WD X 6FT, 6400 LB VERTICAL, 5000 LB CHOKER, 12800 LB BASK	$ 44.40	4
SLING, WEB, FLAT EYE, NYLON, 3IN WD X 12FT, 8600 LB VERTICAL, 6900 LB CHOKER, 17200 LB BASK	$ 177.75	6
SLING, WEB, FLAT EYE, NYLON, 8FT	$ 26.86	2
SLING, WIRE ROPE, 1/2IN DIA X 4FT LG, 6 X 19 HEMP, IMPROVED PLOW STEEL, 2200 LB VERTICAL, 1600 LB CHOKER, 4400 LB BASKE	$ 27.50	2
SLING, WIRE ROPE, 1/2IN DIA X 5FT LG, 6 X 19 HEMP, IMPROVED PLOW STEEL	$ 35.40	2
SLING, WIRE ROPE, 1/2IN DIA X 6FT LG, 6 X 19 HEMP, IMPROVED PLOW STEEL, 2200 LB VERTICAL, 1600 LB CHOKER, 4400 LB BASKE	$ 18.13	1
SLING, WIRE ROPE, 5/8IN DIA X 4FT LG, 6 X 19 HEMP, CARBON STEEL, 6800 LBS, CHOKER 5200 LBS, V BASKET 13600 LBS, WIRE ROPE W/12IN EYE	$ 20.37	1
SLING, WIRE ROPE, 5/8IN DIA X 5FT LG, 6 X 19 HEMP, CARBON STEEL, 3400 LB VERTICAL, 2500 LB CHOKER, 6800 LB BASKE, WIRE ROPE W/12IN EYE	$ 19.42	1
SLING, WIRE ROPE, 5/8IN DIA X 6FT LG, 6 X 19 HEMP, CARBON STEEL, 6200 LB VERTICAL, 4500 LB CHOKER, 12400 LB BASK, W/12IN EYES	$ 18.32	1
SLING, WIRE ROPE, 5/8IN DIA X 8FT LG, 6 X 19 HEMP, CARBON STEEL, 6200 LB VERTICAL, 4500 LB CHOKER, 12400 LB BASK	$ 54.60	2
SNIPS, STRAIGHT CUT, LEFT OR RIGHT, 9-3/4IN, 1-1/2IN, 18 GA	$ 104.83	7
SOCKET SET, WRENCH, 25 PIECE, 3/16IN THRU, 9/16IN, 6 POINT, 1/4IN DRV, STANDARD AND DEEP, ALLOY STEEL, METAL BOX	$ 625.20	5
SOCKET, METER, BASE, RING TYPE, 4-PRONG, (CAPACITOR CONTROL)	$ 280.00	7
SOCKET, METER, BASE, RING TYPE, 6 PRONG, CAPACITOR CURRENT CONTORL	$ 180.00	5
SOCKET, METER, OVERHEAD, W/MR4 SCREW TYPE SEALING RING, 1, 100A, 8-2/0 AWG LINE AND LOAD, 4-PRONG, CAPACITOR CONTROL STANDARD	$ 267.26	10
SOCKET, METER, TROUGH, SEALING RING, 1, 100A, 8-2/0 AWG LINE AND LOAD, 6 PRONG, 1IN HUB	$ 34.52	1
SOCKET, WRENCH, 1/2IN, 12 POINT, 3/8IN DRV, STANDARD, DEEP, NA.	$ 3.82	1
SOCKET, WRENCH, 3/4IN, 5 POINT, 1/2IN DRV, DEEP, STEEL	$ 94.23	4
SOCKET, WRENCH, 3/4IN, 5 POINT, 1/2IN DRV, DEEP, STEEL, W/T-BAR	$ 260.06	6
SOCKET, WRENCH, 3/8IN - 1-1/4IN, 6 POINT, 1/2IN DRV, IMPACT, BLACK, ON SOCKET CLIP	$ 89.52	1
SOCKET, WRENCH, 9/16IN, 12 POINT, 1/2IN DRV, DEEP, STEEL	$ 16.22	2
SOCKET, WRENCH, 9/16IN, 12 POINT, 3/8IN DRV, STANDARD, STEEL., NA.	$ 4.33	1
SOCKS, CREW, ONE SIZE FITS ALL, 85% WOOL, BEIGE	$ 927.55	82
SOCKS, CREW, ONE SIZE FITS MOST, 90% COTTON, 10% NYLON, WHITE	$ 72.00	36
SOLDER, 40/60 ALLOY, 1 LB TUBE, 1/16IN X 20IN LG	$ 36.37	1
SOLVENT, DEGREASER, 24 OZ AEROSOL, METER MIST	$ 222.70	32
SOLVENT, ELECTRICAL CONTACT CLEANER, 16 OZ AEROSOL CAN	$ 121.88	11
SPACER, ELECTRICAL CABLE, 600V, 3 CONDUCTOR 2 TAP, 10IN, FIBERGLASS, VERTICAL BRACKET, MIDSPAN, CLAMPING, SECONDARY	$ 3,291.89	138
SPLICE KIT, CABLE, 1000 V, 2 - 4/0 ALUM OR COPPER, GEL FOR WATERPROOF, W/CONNECTOR	$ 4,097.34	397

Inventory Provided by Affiliate to Duke Energy Kentucky
For the Year Ended December 31, 2008

COMPANY_SOL	CATALOG_DESC	Values Sum of SumOfTRANS_AMT	Sum of SumOfTRANS_QTY
	SPLICE KIT, CABLE, 15KV V, #4/0-1/C ALUM, RUBBER, REPAIR W/CONNECTOR	$ 155.62	2
	SPLICE KIT, CABLE, 15KV V, 2 AWG ALUM, 1/0 AWG SOLID ALUM, RUBBER, CABLE REPAIR SPLICE,SHIELDED, RUBBER	$ 499.12	8
	SPLICE KIT, COLD SHRINK, 15KV V, #4/0 AL, RUBBER, CONSISTS OF SPLICE BODY,GROUND LEADS,AND ALUM	$ 479.07	16
	SPLICE KIT, ELECTRICAL, 15KV V, #2 AWG,AL,1/C CONCENTRIC NEUTRAL JACKETED CABLE, 175 MIL TREE RETARDANT X-LINKED POLYETHYLENE, IN LINE	$ 1,012.44	62
	SPLICE KIT, ELECTRICAL, 15KV V, 1/0 ALUMINUM SOLID, 175 MIL TRXLPE, STRAIGHT SPLICE	$ 581.61	42
	SPLICE, ELECTRICAL, AUTOMATIC SLEEVE, COPER REDUCING, ONE END #4 SOL, OTHER END #6, SPLICE-AUTO LINE 4-6HDBC	$ 1,017.62	220
	SPLICE, ELECTRICAL, BUTT, 12 TO 10 AWG, ALUM, COMPRESSION, NYLON	$ 144.00	300
	SPLICE, ELECTRICAL, BUTT, 16-14 WIRE RANGE, BRASS, COMPRESSION, NYLON, MAXIMUM INSULATION DIA .148	$ 99.80	200
	SPLICE, ELECTRICAL, DIRECT BURY, #12, SOLID COPPER, PRESSURE TYPE, SILICONE FILLED	$ 598.32	831
	SPLICE, ELECTRICAL, FULL TENSION, 795KCMIL ALL ALUM., ALUMINUM, AUTOMATIC, COMPRESSION, NO, CONDUCTOR DIA. = 1.026IN	$ 1,371.47	33
	SPLICE, ELECTRICAL, GUY WIRE, 5/16IN EHS GALV STEEL, GALV STEEL, NO, 42IN LG, ROD DIA. - .086IN, BLACK	$ 202.90	44
	SPLICE, ELECTRICAL, JUMPER, 900 MCM 54X7 STRANDED ACSR, ALUM, COMPRESSION, NO, REINFORCED, 954 KCM 45X7 STRANDED ACSR, 954 KCM 37 OR 61 STRA	$ 252.91	12
	SPLICE, ELECTRICAL, NON-TENSION, 1/0 STR ALUM, ALUM, COMPRESSION, NO, SLEEVE, 5/8IN DIA, YELLOW-YELLOW,(USE 5/8IN DYE, OF TOOL, #0-51	$ 302.27	1,120
	SPLICE, ELECTRICAL, REDUCING, NON TENSION, 2IN- #2 COPPER TAIL INL, #1/0 ALUM OUT, ALUM, COMPRESSION, NO, 5/8IN DIA., PREFORMED	$ 1,458.60	1,430
	SPLICE, ELECTRICAL, REDUCING, NON TENSION, 2IN #4 COPPER INL, #2 ALUM OUT, ALUMINUM, COMPRESSION, NO, PREFORMED, 5/8IN DIA., COLOR CODE - RE	$ 1,793.40	1,830
	SPLICE, ELECTRICAL, REDUCING, NON TENSION, 2IN-#6 COPPER TAIL INL, #4 ALUM OUT, ALUMINUM, COMPRESSION, NO, PREFORMED, 5/8IN DIA. COLOR CODE	$ 611.10	630
	SPLICE, ELECTRICAL, SEMI TENSION, 1/0AAC, TRIPLEX, NEUTRAL ONLY, 5/8IN DIA, DIE INDEX-243	$ 202.27	150
	SPLICE, ELECTRICAL, SEMI TENSION, 1/0ACSR, TRIPLEX, NEUTRAL ONLY, 5/8IN DIA, DIE INDEX-243	$ 246.38	275
	SPLICE, ELECTRICAL, SEMI-TENSION, 1/0 AAC, AAAC, ACSR, TRIPLEX NEUTRAL, ALUM, COMPRESSION, SPLICING NEUTRAL OF TRIPLEX CONDUCTOR	$ 23.00	20
	SPLICE, ELECTRICAL, STRAIGHT, 1/0 AWG STRANDED TO 2/0 AWG SOLID COPPER, COPPER, AUTOMATIC, NO, 2/0 CU LINE CONNECTOR	$ 546.43	48
	SPLICE, ELECTRICAL, STRAIGHT, 4/0 AWG SOLID, 3/0 AWG STRANDED COPPER, COPPER, AUTOMATIC, NO, 4/0 SO LINE SPLICE	$ 371.30	18
	SPLICE, ELECTRICAL, TENSION, 1/0-6/1,2/0-7/1ACSR,1/0-2/0AAAC,1/0-2/0, ALUM, AUTOMATIC, YELLOW CODE FOR 1/0 AND GRAY CODE FOR 2/0.	$ 2,479.54	280
	SPLICE, ELECTRICAL, TENSION, 2 AWG 6X1 STRANDED ACSR, ALUM, COMPRESSION	$ 85.20	10
	SPLICE, ELECTRICAL, TENSION, 2 AWG SOLID COPPER, 3 AWG STRANDED COPPER, 5 AW, COPPER, AUTOMATIC, NO	$ 5,025.67	832
	SPLICE, ELECTRICAL, TENSION, 336.4 MCM 19 STRANDED, ALUM, AUTOMATIC	$ 459.64	30
	SPLICE, ELECTRICAL, TENSION, 4 AWG SOLID COPPER, (3) 10/8 AWG COPPERWELD COP, COPPER, AUTOMATIC, 100 PER/PK	$ 2,115.81	650
	SPLICE, ELECTRICAL, TENSION, 4/0 AWG 7 STRANED AAA, 5005 OR 6201, ALUM, AUTOMATIC	$ 882.62	62
	SPLICE, ELECTRICAL, TENSION, 6 AWG SOLID COPPER, (3) 12 AWG COPPERWELD COPPE, COPPER, AUTOMATIC	$ 926.62	300
	SPLICE, ELECTRICAL, TENSION, 636 MCM 26X7 STRANDED ACSR, COMPRESSION	$ 94.80	3
	SPLICE, SECONDARY BOX, 36IN LG X 26IN WD X 16IN DP, FIBERGLASS, 36IN LONG X 26IN WIDE X 16IN DEEP FIBERGLASS	$ 419.30	10
	SPOON, STREET BOX, 1/2IN WD X 5FT 6IN LG, COLD DRAWN FINISHED STEEL C-1080	$ 2,287.94	26
	SPREADER, SECONDARY CABLE, 7IN HGT X 5IN WD, HIGH INTENSITY POLYETHYLENE, 4 CONDUCTOR, 4IN DIA HOLE W/ SS GROMET,	$ 78.00	15
	SPRING, COMPRESSION, 1IN., STEEL, BLUE 25-90PSI	$ 30.00	2
	SPRING, COMPRESSION, 2-17/32IN DIA X 5-3/8IN LG, SS	$ 16.32	1
	SPRING, MAIN SPRING, ADJUSTMENT, 1.5-3.25 PSIG RANGE, ORANGE	$ 65.16	1
	STAKE, ENGINEERS, 1IN X 2IN X 24IN LG, WHITE OAK	$ 174.12	525
	STAND, SIGN, PORTABLE, FOLD-UP WITH TELESCOPING LEGS	$ 843.03	9
	STAPLE, FENCE WIRE, 1/4IN WD X 2IN LG X .162IN THK, GALV STEEL	$ 546.50	309
	STAPLE, FENCE WIRE, 1-1/2IN LG, GALV STEEL, 3/8IN SPREAD, SQ BARBED OR ROUNG CLEATED SHAPE	$ -	0
	STAPLE, PVC MOLDING, 5/8IN SPREAD X 2IN LONG X .162 DIA., HOT DIPPED GALVANIZED STEEL	$ 112.87	1,100
	STAPLE, WOOD MOLDING, WIRE, CABLE, 1-1/2IN SPREAD X 3IN LG X 1/4IN DIA, GALV STEEL, ROLLED DIAMOND POINT1000PER/PK	$ 128.38	400
	STARTER, LAMP, HIGH PRESSURE SODIUM, 120V, 400W, STARTING AID	$ 141.21	6
	STARTER, LAMP, HIGH PRESSURE SODIUM, 400, AID SOD UNIVERSAL (PLUG-IN TYPE)12PER/PK	$ 222.05	7
	STEM, VALVE, 5IN X 3/8IN, STEEL, SQUARE STEEL ROD	$ 21.40	2
	STICK, HOT LINE, SHOTGUN, SIDE OPENING HOOK, 8FT LG, FIBERGLASS, WITH FIT-ALL HEAD	$ 1,625.92	8
	STICK, HOT LINE, TELESCOPING, UNIVERSAL HEAD, 30FT LG, BASE 2-3/8IN DIA - TIP 1-3/32IN DIA, FIBERGLASS, RE-TRACTED 63-3/8IN LG, LOCKING SECT	$ 275.83	1
	STICK, HOT LINE, TELESCOPING, UNIVERSAL HEAD, 8FT LG, BASE 1.75IN DIA, FIBERGLASS, HD TEL-O-POLE II NO TWIST TRIANGLE SHAPE	$ 104.13	1
	STIFFENER, 1-1/4IN PIPE	$ 31.95	9
	STIFFENER, 12IN, PIPE, SDR 13.5	$ 563.06	4
	STIFFENER, 2IN PIPE	$ 137.45	41
	STIFFENER, 3IN PIPE	$ 14.01	2
	STIFFENER, 4IN PIPE	$ 36.09	4
	STIFFENER, 6IN PIPE	$ 206.48	10
	STIFFENER, 8" PIPE, SDR13.5	$ 1,029.05	42
	STIRRUP, BAIL, 4-1/2IN SQ, 2 AWG SOLID COPPER, NICKEL PLATED COPPER, FABRICATED, FLATTENED AND KNURLED ON ONE SIDE	$ 38.60	9
	STOPPER, 1-1/2, RUBBER AND STEEL	$ 45.48	3
	STOPPER, 1IN, RUBBER AND STEEL	$ 120.19	10

Inventory Provided by Affiliate to Duke Energy Kentucky
For the Year Ended December 31, 2008

COMPANY_SOL CATALOG_DESC	Values Sum of SumOfTRANS_AMT	Sum of SumOfTRANS_QTY
STRAINER, GASKET, 2IN, SS 20 MESH	$ 560.12	27
STRAINER, GASKET, 3IN, SS 20 MESH	$ 50.51	2
STRAP, CHIN, ELASTIC, HAT	$ 18.81	7
STRAP, CONDUIT, 2IN NOMINAL, MECHANICALLY PLATED ALUM, 2IN	$ 5.65	6
STRAP, CONDUIT, 2IN, PVC, 3.50IN LG X 2.62IN HIGH, 2-HOLE	$ 3.29	9
STRAP, CONDUIT, 4IN NOMINAL, MECHANICALLY PLATED ALUM, 4IN	$ 24.21	12
STRAP, CONDUIT, 6IN NOMINAL, MECHANICALLY PLATED ALUM, 6IN	$ 14.70	6
STRAP, PIPE, 12IN TO 30IN, STEEL, 2IN WD X 18-1/4IN LG X 3/8IN THK	$ 405.00	75
STRAP, PIPE, 2IN TO 4IN, STEEL, 1IN WD X 14-1/2IN LG X	$ 49.92	14
STRAP, PIPE, 6IN TO 8IN, STEEL, 1IN WD X 17-5/16IN LG X 1/2IN THK	$ 106.80	27
STRAP, SAFETY, FALL PROTECTION SYSTEM, NYLON & METAL, 50IN CIRCUMFERENCE, SNAP HOOKS, 5000 LB	$ 1,661.40	4
STRAP, SAFETY, POLE, NYLON, BUCKLE, W/DOUBLE LOCKING SNAP	$ 502.32	5
STRAP, TARPAULIN, 15IN, RUBBER	$ 37.80	20
STRAP, TARPAULIN, 31IN, RUBBER	$ 3.03	3
STRAP, TARPAULIN, 7IN-9IN, RUBBER W/ STEEL HOOKS	$ 6.24	13
STRIPPER, CABLE, 2/0, 4/0, 350 MCM, 500 MCM, SQUARE CUT, BUSHING INCLUDED -	$ 349.36	4
STRIPPER, WIRE CUTTER/STRIPPER--ADJ., 24 TO 12GA, STD PKG/1	$ 5.94	1
STRIPPER, WIRE STRIPPER, 10 TO 22 AWG, PLASTIC-COVERED HANDLES	$ 117.81	7
STRUT, POLE, 15IN, GALV STL	$ 396.80	6
STUD, ALL-THREAD, 1-1/8IN DIA, 8 UNC THD, 7IN LG, ALLOY, ASTM A193, B7 GR	$ 181.98	32
STUD, ALL-THREAD, 3/4IN DIA, 10 UNC THD, 4-1/2IN LG, ALLOY, ASTM A193, B7 GR, WITH TWO GRADE 2H NUTS	$ 118.50	82
STUD, ALL-THREAD, 3/4IN DIA, 10 UNC THD, 4-3/4IN LG, ALLOY, ASTM A193, B7 GR	$ 394.31	230
STUD, ALL-THREAD, 3/4IN DIA, 10 UNC THD, 5-1/2IN LG, ALLOY, ASTM A193, B7 GR, 25 EA/BX	$ 33.61	50
STUD, ALL-THREAD, 3/4IN DIA, 10 UNC THD, 5-1/4IN LG, ALLOY, ASTM A193, B7 GR, W/TWO GRADE 2H NUTS, 25 EA/BX	$ 246.42	159
STUD, ALL-THREAD, 3/4IN DIA, 10 UNC THD, 5IN LG, ALLOY, ASTM A193, B7 GR	$ 81.12	50
STUD, ALL-THREAD, 5/8IN DIA, 11 THD, 3-1/2IN LG, STEEL, B7 GR, W/2 NUTS, S-2H, 10 EA/BX	$ 28.58	32
STUD, ALL-THREAD, 5/8IN DIA, 11 UNC THD, 3-1/4IN LG, ALLOY, ASTM A193, W/TWO GRADE 2H NUTS, 50 EA/BX	$ 10.45	12
STUD, ALL-THREAD, 5/8IN DIA, 11 UNC THD, 3-3/4IN LG, ALLOY, ASTM A193, B7 GR, W/NUTS, 50 EA/BX	$ 231.98	255
STUD, ALL-THREAD, 7/8IN DIA, 9 UNC THD, 5-1/2IN LG, ALLOY, ASTM A193, B7 GR, W/TWO GRADE 2H NUTS, STD PKG/10	$ 19.06	12
STUD, ALL-THREAD, 7/8IN DIA, 9 UNC THD, 5-3/4IN LG, STEEL ALLOY, ASTM A193, B7 GR	$ 164.92	62
STUD, LINE POST INSULATOR, 3/4IN DIA, 10 UNC THD, 1-3/4IN TL, GALV, W/ NUT AND 2 LOCK WASHERS	$ 1,710.88	618
STUD, LINE POST INSULATOR, 5/8IN DIA, 11 UNC THD, 7-1/2IN LG, 6IN TL, GALV, W/NUT AND LOCK WASHER	$ 1,121.51	235
STUD, LINE POST INSULATOR, 5/8IN DIA, 11UNC THD, 7IN LG, 4IN TL, GALV, WITH NUT & LOCK WASHER	$ 3,591.81	1,133
STUD, LINE POST, 3/4IN DIA, 7 UNCR THD, 4-1/2IN 10IN LG, 4IN TL, HOT DIPPED GALV STEEL, DOUBLE END, STD PKG - 30 PER/PK	$ 23.27	6
SUPPORT, CABLE, ALUM, WRAP TYPE, SIZE: 0.875IN TO 2IN DIA CABLE, BANANA BRACKET	$ 803.80	45
SUPPORT, PIPE SUPPORT, 6IN CARRIER, CARBON STEEL ASTM A-36	$ 660.00	4
SUPPORT, PIPE, 1-1/4IN, STEEL	$ 369.00	18
SUPPORT, PIPE, 2IN, STEEL	$ 990.00	44
SUPPORT, VALVE, 2IN AND 3IN, PLASTIC	$ 94.13	16
SUPPORT, VALVE, 4IN, PLASTIC	$ 10.69	1
SUPPRESSOR, SURGE, WHOLE HOUSE, 120/240V, 200A, 60HZ, 150V, MCOV, W/DUAL SUNBRIGHT UPGRADE W/O	$ 2,830.00	40
SUPPRESSOR, SURGE, WHOLE HOUSE, HARDWIRED, 120/240 V, 400 A, AC SERVICE, W/GREEN LED	$ 1,104.00	12
SUSPENSION, SAFETY HAT, 6-1/2IN TO 7-3/4IN, VINYL, W/SWEAT BAND AND CROWN STRAPS	$ 118.46	33
SUSPENSION, SAFETY HAT, RATCHET, ADJUSTABLE, PLASTIC, FOR YELLOW HARD HATS ONLY, FAS-TRAC	$ 115.03	18
SUSPENSION, SAFETY HAT, RATCHET, STANDARD - 6-1/2 - 8, FOR MSA HATS ONLY, LG KNOB F/EASY ADJUSTMENT	$ 359.19	64
SUSPENSION, SAFETY HAT, SAFETY CAP,, LIGHTWEIGHT PLASTIC, KWIK-KLIP BAND, F/V84	$ 18.18	2
SUSPENSION, SAFETY HAT, STAY-ON FOR MSA TOPGUARD HARD HAT, 6 1/2-7-3/4	$ 41.28	12
SWITCH, AIRBREAK, 69KV, 1.2KA, V TYPE	$ 31,500.00	18
SWITCH, CAPACITOR, VACUUM, 15KV, 200 AMP	$ 15,672.00	24
SWITCH, CAPACITOR, VACUUM, 35KV, 200 AMP	$ 2,223.00	3
SWITCH, DISCONNECT, LOADBREAK, 15KV, 600A, 150 BIL	$ 2,809.26	9
SWITCH, DISCONNECT, OUTDOOR, 15KV, 600A, 110KV BIL, 1 POLE, INVERTED CROSSARM, OUTDOOR, OPEN, (4) BOLT	$ 3,620.56	33
SWITCH, DISCONNECT,OVERHEAD, 15KV, 600A, 110KV, LOADBREAK, HOOKSTICK, UPRIGHT, 3 PH	$ 2,225.42	1
SWITCH, DISCONNECT,OVERHEAD, IN LINE, 25 KV, 600 A, 150 KV BIL, SINGLE	$ 25,090.09	149
SWITCH, DISCONNECT,OVERHEAD, LOAD INTERRUPTER, 14.4KV, 600A, SINGLE POLE HOOK STICK	$ 8,831.82	18
SWITCHGEAR, PADMOUNT, 8.3/14.4KV, 2-200A LINE POSITIONS; 2-200A FUSED, PAINTED STEEL, 95KV BIL	$ 7,710.00	2
TAG, IDENTIFICATION, BLANK, 3IN WD X 5IN LG, ALUMINUM, WITH 12 INCH ANTI-RUST WIRE	$ 60.30	100

Inventory Provided by Affiliate to Duke Energy Kentucky
For the Year Ended December 31, 2008

COMPANY_SOL CATALOG_DESC	Values Sum of SumOfTRANS_AMT	Sum of SumOfTRANS_QTY
TAG, MARKING, BLANK, 11-3/4IN X 1-3/4IN X 0.1IN THK, PLASTIC, BLACK, 8 POSITION, 1IN SQUARE INDENTIFIED POSITION	$ 412.80	480
TAG, MARKING, BLANK, 14-3/4IN X 1-3/4IN X 0.1IN THK, PLASTIC, BLACK, 10- 1IN SQUARE INDENTED POSITION	$ 3,588.73	2,255
TAG, MARKING, BLANK, 3-1/4IN X 11-1/4IN X 0.1IN THK, PLASTIC, BLACK, 2.5IN SQ INDENTED POSITION, 5 POSITION PER TAG	$ 73.29	25
TAG, MARKING, BLANK, 3-1/4IN X 11-1/4IN X 0.1IN THK, PLASTIC, BLACK, 2.5IN SQUARE INDENTED POSITION	$ 473.40	180
TAG, MARKING, BLANK, 3-15/16IN X 6-3/4IN X 0.1IN THK, PLASTIC, BLACK, 2.5IN SQ INDENTED POSITION	$ 475.00	190
TAMPER, HAND, SQUARE STEEL BASE-8IN X 8IN, 42IN VARNISHED HANDLE	$ 19.14	1
TAP, PIPE, TAP/DRILL, 3/4IN DIA, 10IN LG, 14 TPI THD, HSS, 4	$ 130.95	1
TAP, TEE, HVTT, 5/8IN HEX HEAD DIA, FOR USE WITH MT DEASON HVTT TAPPING TEES ONLY	$ 1,321.50	12
TAPE, DUCT, 2IN WD X 60 YD LG, VINYL, OLIVE DRAB	$ 359.81	48
TAPE, DUCT, 3IN WD X 60 YD LG, SILVER, HIGHLAND	$ 169.28	13
TAPE, ELECTRICAL, 1/2IN WD X 20FT LG, PLASTIC, BROWN	$ 8.40	10
TAPE, ELECTRICAL, 1/2IN WD X 20FT LG, VINYL, BLUE, CABLE MARKING	$ 19.55	22
TAPE, ELECTRICAL, 1/2IN WD X 20FT LG, VINYL, GREEN, CABLE MARKING 10 RL/BX	$ 10.46	12
TAPE, ELECTRICAL, 1/2IN WD X 20FT LG, VINYL, ORANGE, CABLE MARKING	$ 10.74	12
TAPE, ELECTRICAL, 1/2IN WD X 20FT LG, VINYL, RED, CABLE MARKING	$ 10.72	12
TAPE, ELECTRICAL, 1/2IN WD X 20FT LG, VINYL, WHITE, CABLE MARKING	$ 9.90	12
TAPE, ELECTRICAL, 1/2IN WD X 20FT LG, VINYL, YELLOW, CABLE MARKING	$ 10.58	12
TAPE, ELECTRICAL, 1IN WD X 30 FT LG X .012IN TH, SELF FUSING SILICONE RUBBER, LIGHT GRAY	$ 147.82	11
TAPE, ELECTRICAL, 3/4" WD X 66' LG X0.0085" THK, VINYL PLASTIC, BLACK	$ 1,559.27	2,020
TAPE, ELECTRICAL, 3/4IN WD X 30FT LG X 30 MM THK, RUBBER, LOW AND HIGH VOLTAGE LINERLESS	$ 25.71	5
TAPE, ELECTRICAL, 3/4IN WD X 66 FT LG RL X .007 THK, PLASTIC, BLUE	$ 181.01	60
TAPE, ELECTRICAL, 3/4IN WD X 66 FT LG RL X .007 THK, PLASTIC, RED	$ 174.48	60
TAPE, ELECTRICAL, 3/4IN WD X 66 FT LG RL X .007 THK, PLASTIC, YELLOW	$ 167.72	56
TAPE, ELECTRICAL, 3/4IN X 66 FT LG X .007 THK, PLASTIC, BROWN	$ 43.53	20
TAPE, ELECTRICAL, 3/4IN X 66 FT LG X .007 THK, PLASTIC, ORANGE	$ 50.70	20
TAPE, ELECTRICAL, 3/4IN X 66 FT LG X .007 THK, PLASTIC, WHITE	$ 278.72	129
TAPE, FISH, 1/2IN WD X 3000FT LG, POLYESTER	$ 1,159.65	21,000
TAPE, FISH, 1/4IN WD X .060IN THK X 100 FT LG, STEEL, FISH	$ 98.33	2
TAPE, GENERAL PURPOSE, 1-1/2IN WD X 66FT LG X 8 MM THK, VINYL PLASTIC, BLACK OR GRAY	$ 4,372.19	2,826
TAPE, MEASURING, HEAVY DUTY, 3/4IN WD X 16FT LG, STEEL, CONTRACTOR GRADE	$ 415.43	34
TAPE, MEASURING, REEL, 5/8IN WD X 100FI LG, SYNTHETIC FIBER, HILINE	$ 167.86	2
TAPE, MOISTURE BARRIER, 3-3/4IN X 10FT LG, RUBBER MASTIC SEAL, BLACK, SELF HEALING	$ 934.70	56
TAPE, PACKING, 2IN WD X 60 YD LG, CLEAR OR TAN, 36 ROLLS PER PACKAGE	$ 33.24	24
TAPE, PIPE DOPE, 1/2IN X 520 IN, ROLL, TEFLON, WHITE	$ 76.70	130
TAPE, PIPELINE COATING, 1IN, POLYETHYLENE, BLACK, 100FT ROLL	$ 542.07	180
TAPE, PIPELINE COATING, 2IN WD, POLYETHYLENE, BLACK	$ 73.31	13
TAPE, PIPELINE COATING, 4IN WD X 100FT LG, POLYETHYLENE, BLACK	$ 93.82	10
TAPE, PROTECTION, 2IN WD X 75FT LG X 35 MILS THK, MULTIPOLYMER ALLOY FILM, GRAY, COLD APPLIED ABOVE AND BELOW GROUND, WITH INTEGRATED PRI	$ 10.53	1
TAPE, SAFETY BARRIER, CAUTION, 3IN WD X 300FT LG, BLACK IMPRINT ON YELLOW BACKGRD, PLASTIC, BARRICADE, BANNER GUARD, SUPER STRENGTH	$ 46.30	10
TAPE, SAFETY BARRIER, CAUTION, 3IN WD, W/2IN HIGH LETTERING, YELLOW, PLASTIC, WARNING, IN DISPENSER CARTON	$ 427.11	69
TAPE, SURVEYORS FLAGGING, 1-3/16IN WD X 150FT LG, PINK-GLO, FLOURECENT, 12 ROLLS/BOX	$ 54.00	36
TARPAULIN, 6FT SQ, 22 OZ VINYL COATED NYLON	$ 840.94	23
TARPAULIN, 9FT WD X 12FT LG, 22 OZ VINYL COATED NYLON	$ 720.00	8
TEE, HIGH VOLUME SERVICE TEE, 2IN X 1-1/4IN IPS, EF X BF, PE2406, PE3408, OR PE100, MOLDED W/ PLASTIC UNDER SADDLE,	$ 1,001.73	23
TEE, HIGH VOLUME SERVICE TEE, 2IN X 2IN IPS, EF X BF, PE2406, PE3408, OR PE100, MOLDED W/ PLASTIC UNDER SADDLE, 1.5IN CUTTER	$ 546.00	12
TEE, HIGH VOLUME SERVICE TEE, 4IN X 2IN IPS, EF X BF, PE2406, PE3408, OR PE100, MOLDED W/NYLON STRAP, 1.75IN OR LARGER CUTTER	$ 3,550.12	73
TEE, HIGH VOLUME SERVICE TEE, 6IN X 2IN IPS, EF X BF, PE2406, PE3408, OR PE100, MOLDED W/NYLON STRAP, 1.75IN OR LARGER CUTTER	$ 2,625.20	50
TEE, HIGH VOLUME SERVICE TEE, 8IN X 2IN IPS, EF X BF, PE2406, PE3408, OR PE100, MOLDED W/ NYLON STRAP	$ 1,045.74	19
TEE, HIGH VOLUME SERVICE, 12IN X 2IN IPS, ELECTROFUSION X BUTT FUSION, POLYETHYLENE, MOLDED W/NYLON STRAP, 1.75IN OR GREATER CUTTER	$ 197.04	3
TEE, MEDIUM VOLUME SERVICE TEE, 12IN IPS X 1IN CTS, EF X BF, POLYETHYLENE, MOLDED W/NYLON STRAP, 1.75IN OR LARGER CUTTER	$ 243.30	5
TEE, MEDIUM VOLUME SERVICE TEE, 3IN X 1-1/4IN IPS, EF X BF, PE2406, PE3408, OR PE100, MOLDED W/ PLASTIC UNDER SADDLE	$ 558.60	12
TEE, MEDIUM VOLUME SERVICE TEE, 4IN X 1-1/4IN IPS, EF X BF, PE2406, PE3408, OR PE100, MOLDED W/ NYLON STRAP	$ 1,434.92	30
TEE, MEDIUM VOLUME SERVICE TEE, 8IN X 1-1/4IN IPS, EF X BF, PE2406, PE3408, OR PE100, MOLDED W/ NYLON STRAPS	$ 216.10	4
TEE, PIPE ADAPTER	$ 806.91	37
TEE, PIPE ADAPTER, 1-1/4IN, MIPT, COMPRESSION, THD, STEEL	$ 336.00	3
TEE, PIPE ADAPTER, 1-1/4IN, MNPT, 1-1/4IN FNPT, 1-1/4IN IPS COMPRESSION, MALLEABLE IRON, 150 LB, SDR 10 POLYETHYLENE	$ 1,852.20	75
TEE, PIPE ADAPTER, 12IN, WELD, FLANGED, BW, STEEL, 150 LB, ANSI 150, SPHERICAL 3-WAY(TYPE 11A)	$ 2,692.33	1

Inventory Provided by Affiliate to Duke Energy Kentucky
For the Year Ended December 31, 2008

COMPANY_SOL CATALOG_DESC	Values Sum of SumOfTRANS_AMT	Sum of SumOfTRANS_QTY
TEE, PIPE ADAPTER, 1IN, THD, COMPRESSION, STEEL, 4A GR	$ 77.44	3
TEE, PIPE ADAPTER, 2IN, BW, THD, BW, CARBON STEEL, 150 LB, FLAT BOTTOM, 3-WAY, SHORTSTOPP	$ 1,000.00	8
TEE, PIPE ADAPTER, 2IN, WELD, THD, BUTT WELD, CARBON STEEL, 150 LB, ASNI CLASS 150, TEE, 3-WAY, COMPLETE	$ 750.00	12
TEE, PIPE ADAPTER, 2IN, WELD, THD, BW, SS, 300 LB, ASTM A105, SHORTSTOPP-TEE (300D), 3-WAY, FULL ENCIRCLEMENT	$ 1,584.00	4
TEE, PIPE ADAPTER, 3/4IN, MNPT, COMPRESSION, STEEL	$ 25.18	1
TEE, PIPE ADAPTER, 3/4IN, MNPT, FNPT, STEEL	$ 561.76	22
TEE, PIPE ADAPTER, 3IN, WELD, THD, BW, CARBON STEEL, 150 LB, ANSI CLASS 150, TEE, 3-WAY, SHORTSTOPP	$ 795.00	5
TEE, PIPE ADAPTER, 4IN, WELD, BEVELED, STEEL, 150 LB, ASTM A516, FLAT BOTTOM, 3-WAY, (TYPE IIA)	$ 2,269.13	7
TEE, PIPE ADAPTER, 4IN, WELD, FLANGED, BUTT WELD, SS, 300 # LB, ANSI 300, TEE, SPHERICAL, 3-WAY(300D)	$ 1,334.96	2
TEE, PIPE ADAPTER, 6IN, 6IN, FLANGED, 6IN WELD, STEEL, 150 LB, ASTM A516, FLAT BOTTOM, 3-WAY(TYPE IIA)	$ 4,583.18	7
TEE, PIPE ADAPTER, 6IN, 6IN, FLANGED, BRANCH 6IN, STEEL, 150 LB, ASTM A516, SHORTSTOPP,3-WAY,TYPE IIA, SCARFED FOR 6IN MAIN	$ 1,481.36	2
TEE, PIPE ADAPTER, 8IN, WELD, FLANGED, BUTT WELD, CARBON STEEL, 150 LB, ANSI CLASS 150, TEE, SPHERICAL, 3-WAY(TYPE 11A)	$ 4,556.00	3
TEE, PIPE ADAPTER, 8IN, WELD, FLANGED, BUTT WELD, SS, 300 LB, ASTM A105, TEE, SPHERICAL, 3-WAY(300D)	$ 2,338.00	1
TEE, PIPE REDUCER, 1-1/2IN X 1-1/2IN X 1IN, THD, BLACK MALLEABLE IRON, 150 LB, TE-008-51	$ 10.26	2
TEE, PIPE REDUCER, 1-1/2IN X 1-1/2IN X 3/4IN, FNPT, BLACK MALLEABLE IRON, 150 LB, TE-008-51	$ 13.02	3
TEE, PIPE REDUCER, 1-1/4IN X 1-1/4IN X 1IN, THD, BLACK MALLEABLE IRON, 150 LB, TE-008-51	$ 26.46	6
TEE, PIPE REDUCER, 1-1/4IN X 1-1/4IN X 3/4IN, THD, BLACK MALLEABLE IRON, 150 LB, TE-008-51	$ 10.64	4
TEE, PIPE REDUCER, 12" X 12" X 12", WELD, BEVELED ENDS TO 0.250 WALL, CARBON STL, ASTM A234, ANS B16.9, Y-42 GR, STD WEIGHT W/ PIG BARS AT B	$ 4,941.16	4
TEE, PIPE REDUCER, 12" X 12" X 4", WELD, BEVELED ENDS, CARBON STL, ASTM A234, ANSI B16.9, Y-42 GR, STANDARD WEIGHT W/ PIG BARS AT BRANCH, UN	$ 13,125.00	10
TEE, PIPE REDUCER, 1IN X 1IN X 3/4IN, THD, BLACK MALLEABLE IRON, 150 LB, TE-008-51	$ 37.28	15
TEE, PIPE REDUCER, 1IN X 3/4IN, WELD, FORGED CARBON STEEL, 1200 LB, ASTM A105	$ 1,522.04	72
TEE, PIPE REDUCER, 2IN X 2IN X 1-1/4IN, THD, BLACK MALLEABLE IRON, 150 LB, TE-008-51	$ 55.26	7
TEE, PIPE REDUCER, 2IN X 2IN X 1IN, THD, BLACK MALLEABLE IRON, 150 LB, TE-008-51	$ 11.80	2
TEE, PIPE REDUCER, 4IN X 4IN X 2IN, BW, STEEL, STANDARD WEIGHT LB, ASTM A234, B GR	$ 77.59	2
TEE, PIPE REDUCER, 4IN X 4IN X 2IN, EFXEFXBF, PE100/PE 3408, ASTM D2513, D3350, F1055, 3-WAY	$ 89.03	1
TEE, PIPE REDUCER, 6INX6INX4IN, ELECTROFUSION, POLYETHELENE, ASTM D2513, D3350, F1055, BLACK PE100/3408	$ 217.85	2
TEE, PIPE REDUCER, 8 X 8 X 4, ELECTROFUSION, POLYETHELENE, ASTM D2513, D3350, F1055, BLACK PE100/3408	$ 241.45	2
TEE, PIPE REDUCER, 8IN X 8IN X 6IN, ELECTROFUSION, POLYETHELENE, ASTM D2513, 3350, F1055, BLACK PE100/3408	$ 2,944.17	20
TEE, PIPE, 2IN X 2IN X 1 1/2IN, THD, MALLABLE IRON, CLASS 150	$ 103.48	12
TEE, PIPE, 2IN X 2IN X 3/4IN, THD, MALLABLE IRON, CLASS 150	$ 71.23	9
TEE, PIPE, 3/4IN X 3/4IN X 1/2IN, THD, MALLABLE IRON, CLASS 150	$ 3.87	2
TEE, PIPE, 1/2IN, THD, BLACK MALLEABLE IRON, 150, TE-007-51	$ 17.25	20
TEE, PIPE, 1/4IN, FNPT, BLACK MALLEABLE IRON, 150, TE-007-51	$ 13.91	10
TEE, PIPE, 1/8IN, THD, BLACK MALLEABLE IRON, 150, TE-007-51	$ 13.86	10
TEE, PIPE, 1-1/2IN X 1-1/2IN X 1-1/4IN BRANCH, THD, MALABLE IRON, CLASS 150	$ 10.76	2
TEE, PIPE, 1-1/2IN, THD, BLACK MALLEABLE IRON, 150, TE-007-51	$ 55.10	14
TEE, PIPE, 1-1/4IN IPS, STAB FITTINGS, POLYETHYLENE, SDR 10	$ 120.88	2
TEE, PIPE, 1-1/4IN, THD, MALLABLE IRON, CLASS 150	$ 73.22	21
TEE, PIPE, 12IN IPS, SDR 13.5, BUTT FUSION, YELLOW PE2406 OR BLACK PE3408, ASTM D 2513, D 3261, MOLDED PE	$ 4,015.54	10
TEE, PIPE, 12IN, WELD, STEEL, ASTM A234, B GR	$ 4,279.00	11
TEE, PIPE, 1IN X 1IN X 1IN, STAB, POLYETHYLENE, 90, PE2406 GR	$ 195.49	12
TEE, PIPE, 1IN, SW, BLACK FORGED CARBON STEEL, 3000, ASTM A105	$ 15.60	3
TEE, PIPE, 1IN, SW, BLACK FORGED STEEL, 2-1/4% CHROME, 1% MOLYBDENU, 3000 LB, ASTM A182, F22 GR	$ 19.34	1
TEE, PIPE, 1IN, THD, BLACK MALLEABLE IRON, 150, TE-007-51	$ 51.29	23
TEE, PIPE, 2IN, BUTT FUSION, POLYETHYLENE, PE2406, 80, ASTM 2513, SDR 11 GR, YELLOW CSA, IAPMO	$ 53.46	16
TEE, PIPE, 2IN, THD, BLACK MALLEABLE IRON, 150, TE-007-51	$ 326.62	43
TEE, PIPE, 3/4IN, THD, BLACK MALLEABLE IRON, 150, TE-007-51	$ 53.32	42
TEE, PIPE, 3/8IN, FNPT, BLACK MALLEABLE IRON, 150, TE-007-51	$ 13.12	10
TEE, PIPE, 3IN, BUTT FUSION, PE 2406, 80, ASTM 2513 D3261, SDR 11/11.5 GR, YELLOW CSA, IAPMO	$ 6.74	1
TEE, PIPE, 4IN, BUTT FUSION, POLYEHTYLENE, PE2406, 80, ASTM D2513 AND D3261, SDR 11/11.5 GR, YELLOW CSA, IAPMO	$ 233.09	24
TEE, PIPE, 4IN, THD, BLACK MALLEABLE IRON, 150, TE-007-51	$ 134.65	3
TEE, PIPE, 4IN, WELD, STEEL, ASTM A234, B GR	$ 165.48	5
TEE, PIPE, 6IN, BUTT FUSION, POLYETHYLENE, PE2406, 64, ASTM D2513 D3261, SDR 13.5 GR, YELLOW	$ 410.57	17
TEE, PIPE, 6IN, WELD, STEEL, ASTM A234, B GR	$ 217.36	4
TEE, PIPE, 8IN, BUTT FUSION, POLYETHYLENE, PE2406, ASTM D2513 AND D3261, SDR13.5 GR, YELLOW	$ 801.95	13
TEE, PIPE, 8IN, BW, STEEL, ASTM A234, B GR	$ 2,721.99	6
TEE, SERVICE ENTRANCE, 1IN X 3/4IN, MNPT, STEEL, TEE, PIPE ADAPTER, 1IN X 3/4IN, MIPT, COMPRESSION, STEEL	$ 2,287.03	99

Inventory Provided by Affiliate to Duke Energy Kentucky
For the Year Ended December 31, 2008

COMPANY_SOL CATALOG_DESC	Values Sum of SumOfTRANS_AMT	Sum of SumOfTRANS_QTY
TEE, SERVICE TEE, 1-1/4IN IPS X 1IN CTS, EF X BF, PE100, MOLDED, 0.75IN PUNCH CUTTER,	$ 33.00	3
TEE, SERVICE TEE, 2IN IPS X 1IN CTS, EF X BF, PE2406, PE3408, PE100, MOLDED W/PE UNDER SADDLE, 0.75IN PUNCH CUTTER,	$ 1,757.66	175
TEE, SERVICE TEE, 3IN X 1IN CTS, EF X BF, PE2406, PE3408, OR PE100, MOLDED W/PE UNDER SADDLE, 0.75IN PUNCH CUTTER,	$ 744.28	65
TEE, SERVICE TEE, 4IN X 1IN CTS, EF X BF, PE2406, PE3408, OR PE100, MOLDED W/ PE UNDER SADDLE, 0.75IN PUNCH CUTTER,	$ 2,805.43	275
TEE, SERVICE TEE, 6IN X 1IN CTS, EF X BF, PE2406, PE3408, OR PE100, MOLDED W/PE UNDER SADDLE, 0.75IN PUNCH CUTTER	$ 1,970.05	182
TEE, SERVICE TEE, 8IN X 1IN CTS, EF X BF, PE2406, PE3408, OR PE100, MOLDED W/PE UNDER SADDLE, 0.75IN PUNCH CUTTER	$ 1,391.18	113
TEE, STREET, 1/4IN, MNPT X FNPT, MALLABLE IRON, 150 LB	$ 64.63	23
TEE, STREET, 1-1/2IN, FNPT X MNPT X FNPT, BLACK MALLEABLE IRON, 150 LB	$ 156.16	16
TEE, STREET, 1-1/4IN FNPT X 1INMNPT X 1-1/4INFNPT, THD, BRASS	$ 582.45	18
TEE, STREET, 1-1/4IN X 1IN X 1-1/4IN, FNPT X MNPT X FNPT, BLACK MALLEABLE IRON, 150 LB	$ 584.68	59
TEE, STREET, 1-1/4IN, FNPT X MNPT X FNPT, BLACK MALLEABLE IRON, 150 LB	$ 1,118.23	177
TEE, STREET, 1-1/4IN, FNPT X MNPT X FNPT, BRASS	$ 1,148.27	36
TEE, STREET, 1IN, 1IN MPT (TAPERED) X 1IN FPT X 1IN CTS, BRASS, .099 WALL POLYETHYLENE	$ 24.40	1
TEE, STREET, 1IN, FNPT X MNPT X FNPT, BLACK MALLEABLE IRON, 150 LB	$ 596.74	156
TEE, STREET, 1IN, FNPT X MNPT X FNPT, BRASS	$ 573.37	22
TEE, STREET, 2IN, FNPT X MNPT X FNPT, BRASS	$ 1,388.66	22
TEE, STREET, 2IN, MNPT, MALLABLE IRON, 150 LB, PIPE	$ 1,476.77	71
TEE, STREET, 3/4IN, FNPT X MNPT X FNPT, BLACK MALLEABLE IRON, 150 LB	$ 40.48	14
TERMINAL, LAY-IN, FIFTH	$ 41.76	12
TERMINATION KIT, COLD SHRINK, 15KV, 1000KCMIL CU OR AL, RUBBER	$ 697.60	9
TERMINATION KIT, COLD SHRINK, 15KV, 750KCMIL CU OR AL, RUBBER	$ 3,515.16	36
TERMINATOR, CABLE, POTHEAD, 1/C, 15KV, 1/0 ALUM SOLID, COLD APPLIED/SHRINK	$ 1,482.48	99
TERMINATOR, CABLE, POTHEAD, 1/C, 15KV, 1/C #2 STRANDED ALUM, COLD SHRINK, 0.637IN-1.112IN OD INSULATION,	$ 1,262.98	73
TESTER, PHASING, 16KV, INCLUDES HOOK PROBES, CASE AND MANUAL	$ 907.98	1
TESTER, POTENTIAL METER	$ 759.02	2
TESTER, TEST-O-LITES	$ 4.17	2
TESTER, VOLTAGE AND CONTINUITY, STD PKG/1	$ 447.37	11
THERMOCOUPLE, E, 1/4IN OD, 316 SS, 20-1/2IN, 1/16IN, 1/4IN MNPT	$ 141.16	1
TIE, CABLE, ELECTRICAL CABLE TIE, 1-1/4IN MAX BUNDLE DIA., 0.14IN WD, 6IN LT, NYLON, 30 LBS MIN TENSILE, BLACK	$ 13.85	500
TIE, CABLE, ELECTRICAL CABLE TIE, 2IN MAX BUNDLE DIA., 0.15IN WD, 8-1/2IN LT, NYLON, 40 LBS MIN TENSILE, BLACK	$ 32.48	1,299
TIE, CABLE, ELECTRICAL, .301IN WD, 13.38IN LT, NYLON	$ 630.00	30
TIE, CABLE, ELECTRICAL, 1/8IN WD, 8IN LT, NYLON	$ 50.00	1,000
TIE, CABLE, ELECTRICAL, 3IN, 1/8IN WD, 11IN LT, NYLON, 1000/BX	$ 106.52	1
TIE, CABLE, LASHING, 2.280IN - 2.539IN, 6-FT LT, ALUMOWELD, ROD DIA. - 0.162IN - COLOR CODE - YELLOW	$ 82.59	25
TIE, CABLE, LASHING, 2.840IN - 3.179IN, 6 FT. LT, GALVANIZED STEEL, ROD DIA. - 0.159IN - COLOR CODE - RED	$ 21.60	8
TIE, CABLE, SELF-LOCKING LASHING, 1/16IN TO 1-3/4IN, 0.184IN WD, 7.31IN LT, WEATHER RESISTANT NYLON, 50 LB, BLACK, (100) PER PACKAGE	$ 75.57	800
TIE, CABLE, SELF-LOCKING, 1/16IN - 5/8IN, 0.094IN WD, 3.62IN LT, NYLON	$ 17.00	200
TIE, INSULATOR, F NECK ANSI 57-1, 2-7/8IN, 2 AWG TO 2/0 AWG COVERED COPPER, 0.412IN TO 0.539IN, COMPOSITE, COLOR CODE WHITE	$ 21.00	3
TIE, INSULATOR, F NECK, 2 AWG 7 STRAND AA 5005, AA WIRE, TOP, WITH PAD	$ 17.58	4
TIE, INSULATOR, F NECK, 336.4 KCM 19 STRAND 5005 AAAC, ALUM PLATED STEEL	$ 8.88	3
TIE, INSULATOR, F NECK, 336.4 MCM 26X7 STRAND ACSR, 5005 AAAC	$ 334.06	45
TIE, INSULATOR, F NECK, 4/0 7 STR. AAAC, 4/0 6/1 ACSR, 246.9KCM ACSR, ALUM COVERED STEEL	$ 59.52	8
TIE, INSULATOR, F NECK, 4/0 7 STRAND 5005 AAAC, ALUM PLATED STEEL, SIDE, WITH PAD	$ 27.49	9
TIE, INSULATOR, F NECK, 4/0 AAAC, 7 STR, 4/0, 6/1 ACSR 246.9KCM ACSR, ALUM COVERED STEEL	$ 14.80	3
TIE, INSULATOR, F NECK, 4/0 AWG 6X1 ACSR STRANDED, 4/0 AWG 7 STRAND, AA WIRE, TOP, WITH PAD	$ 861.36	148
TIE, INSULATOR, F NECK, 477-559 KCMIL AAAC (UP TO .858IN), TOP W/PAD	$ 3,129.18	424
TIE, INSULATOR, F NECK, 556.5 KCM AAC, 559.9 KCM AAAC, 477 KCM 18/1, ALUM COVERED STEEL, DOUBLE SUPPORT, (2) TIES W/ (2) PADS, COLOR CODE RE	$ 369.47	57
TIE, INSULATOR, F-NECK, 1/0 7 STR AAAC,1/0 6/1 ACSR, 26IN, ALUM COVERED STEEL, PERFORMED SIDE TIE W/ PAD, COLOR CODE YELLOW	$ 58.11	29
TIE, INSULATOR, F-NECK, 1/0 7 STRAND AAAC, 1/0 6/1 ACSR, 15IN, ALUM COVERED STEEL, DOUBLE SUPPORT, (2) TIES W/ (2) PADS, COLOR CODE YELLOW	$ 18.49	3
TIE, INSULATOR, F-NECK, 1/0 AAAC B7, 1/0 ACSR 6/1, .395IN TO .411IN, 22-1/2IN, ALUM ALLOY WIRE, PREFORMED ALUMINUM WRAP LOCK TIE	$ 503.76	113
TIE, INSULATOR, F-NECK, 1/0, 6/1 ACSR, 1/0, 7 STR AAAC, 16IN, ALUM COVERED STEEL, DOUBLE SUPPORT (2) TIES, W/ (2) PADS, COLOR CODE YELLOW	$ 15.30	5
TIE, INSULATOR, F-NECK, 336.4KCM 18/ACSR, 336.4KCM.26/7 ACSR, 20IN, ALUM COVERED STEEL	$ 11.10	3
TIE, INSULATOR, F-NECK, 477KCM - 559KCM, 20IN, ALUM COVERED STEEL, DOUBLE SUPPORT, (2) TIES, W/(2) PADS	$ 65.30	6
TIE, INSULATOR, F-NECK, 477KCM 18/1 (0.814) TO 599KCM AAAC, 26IN, ALL ALUM ALLOY 6201, PREFORMED SIDE TIE WITH PAD, COLOR CODE RED	$ 371.68	117
TIE, INSULATOR, F-NECK, 795 KCM AAC 37 STR, 45IN, ALUM COVERED STEEL	$ 167.72	22
TIE, INSULATOR, F-NECK, 795KCM AAC 37 STRAND, 28IN, ALUM COVERED STEEL, MAINTENANCE	$ 39.63	3
TIE, INSULATOR, J-NECK, 1/0 7 STR. AAAC, 1/0 6/1 ACSR, 15-1/2, ALUM COVERED STEEL	$ 7.43	1

Inventory Provided by Affiliate to Duke Energy Kentucky
For the Year Ended December 31, 2008

COMPANY_SOL CATALOG_DESC	Values Sum of SumOfTRANS_AMT	Sum of SumOfTRANS_QTY
TIE, INSULATOR, J-NECK, 1/0 AAACB7, ALUM ALLOY WIRE, INSULATOR	$ 6.74	3
TIE, INSULATOR, J-NECK, 3 7/16IN, 1/0 AWG 6/1 ACSR, 1/0 7W AAAC, 0.358IN TO 0.405IN, 21IN, ALUM	$ 7.77	2
TIE, INSULATOR, SPOOL, 1/0 AAAC,7 STR,1/0 ACSR 6/1, 20IN, ALUM COVERED STEEL, EZ WRAP SPOOL TIE, COLOR CODE YELLOW, APPLIED LENGTH	$ 136.96	83
TIE, INSULATOR, SPOOL, 4/0 AAAC, 4/0 ACSR 6/1 AND 246.9 KCM ACAR 7 STR, 25IN, EZ WRAP, SPOOL TIE, COLOR CODE RED	$ 325.76	148
TIP, BURNER, 10-1/2IN LG	$ 516.64	6
TIP, PROBE, 1/2IN, SS, REPLACEMENT TIP F/ M-PACT-O PROBE NO. 50	$ 41.72	7
TISSUE, LENS, 6-1/2IN X 5IN, SILICONE TREATED, PACK	$ 7.58	2
TONGS, POLE, 16-3/4IN DIA MAXIMUM	$ 1,710.00	2
TOOL, CHAMFERING, 2IN IPS	$ 245.25	5
TOOL, CHAMFERING, HAND, 1/2 X 3/4, FOR EDGING END OF PLASTIC PIPE	$ 10.76	1
TOOL, CHAMFERING, HAND, 1/2INCTS X 1INCTS	$ 186.39	18
TOOL, CHAMFERING, HAND, 1-1/4 CTS X 1-1/4 IPS	$ 22.29	1
TOOL, GRIPPER, HAND	$ 123.24	1
TOOL, HOT LINE STICK, LOADBUSTER, 14.4/25KV 600A	$ 2,158.80	2
TOOL, PIPE SQUEEZERS, DOUBLE BAR HAND OPERATED, 1/2IN -2IN	$ 2,250.00	6
TOOL, SIZING, HAND, 3/4IN	$ 34.45	1
TOOL, TAPPING, HAND, 6IN LG	$ 50.00	2
TOWEL, ALL PURPOSE INDUSTRIAL WIPER, 23IN X 16IN APPROX, MED DUTY MILTIPLY WHITE PAPER, POP-UP DISPENSER BOX	$ 1,467.32	84
TOWEL, DISPOSABLE, 8IN WD X 630FT LG ROLL, BLEACHED EMBOSSED PAPER, 580 SHEETS, 12/CS	$ 51.43	12
TOWEL, GENERAL PURPOSE WIPER, 9-3/4IN WD X 17IN LG APPROX, LT DUTY WHITE PAPER, POP UP DISPENSER BOX	$ 11.36	3
TOWEL, HAND C-FOLD, 10-1/4IN X13-1/4IN, WHITE PAPER, 1 PLY, WET STRENGTH, 150/PK, 16/CS	$ 1,036.02	708
TOWEL, WET TASK WIPER, 12IN X 12.5IN, CASE = 1 TUB AND 6 REFILLS, 90 SHEETS PER ROLL	$ 601.22	10
TRANSFORMER, CONTROL, 1 KVA, 4160GRDY/2400-120 V, 1 PH	$ 813.62	2
TRANSFORMER, CONTROL, 1 KVA, 7200-120V V, 1 PH PH	$ 798.75	2
TRANSFORMER, DISTRIBUTION, OVERHEAD, 50 KVA, 4160GRDY/2400 PRI, 120/240 SEC, 1 PH, NO TAP, CONV, 1 NEMA STANDARD BUSHING, W/ 3KV ARRESTER	$ 3,207.34	3
TRANSFORMER, OVERHEAD, CONV, POLE, 100 KVA, 12470GY/7200 PRI, 120/240 SEC, 1 PH, 60 HZ, NO TAP, SINGLE BUSHING-ARRESTER	$ 10,069.44	5
TRANSFORMER, OVERHEAD, CONV, POLE, 15 KVA, 12470GY/7200 PRI, 120/240 SEC, 1 PH, 60 HZ, NO TAP, SINGLE BUSHING - ARRESTER	$ 18,396.95	31
TRANSFORMER, OVERHEAD, CONV, POLE, 25 KVA, 12470GY/7200 PRI, 120/240 SEC, 1 PH, 60 HZ, NO TAP, SINGLE BUSHING- ARRESTER	$ 108,805.09	153
TRANSFORMER, OVERHEAD, CONV, POLE, 25 KVA, 4160GY/2400 PRI, 120/240 SEC, 1 PH, 60 HZ, NO TAP, SINGLE BUSHING/ARRESTER-EXTERNAL	$ 5,364.92	8
TRANSFORMER, OVERHEAD, CONV, POLE, 45 KVA, 12470 PRI, 208Y/120 SEC, 3 PH, 60 HZ, NO TAP	$ 2,043.00	1
TRANSFORMER, OVERHEAD, CONV, POLE, 50 KVA, 12470GY/7200 PRI, 120/240 SEC, 1 PH, 60 HZ, NO TAP, SINGLE BUSHING - ARRESTER	$ 91,481.44	82
TRANSFORMER, OVERHEAD, CONV, POLE, 50 KVA, 12470GY/7200 PRI, 277 SEC, 1 PH, 60 HZ, NO TAP, ONE BUSHING/ARRESTER-EXTERNAL	$ 2,126.38	2
TRANSFORMER, PAD MOUNT, 100 KVA, 12470GY/7200 PRI, 240/120 SEC, 1 PH, 60 HZ, NO TAP, LOOPFEED/FUSED/DEADFRONT, BAYONET/WEAK LINK	$ 12,297.26	6
TRANSFORMER, PAD MOUNT, 15 KVA, 12470GY/7200 PRI, 240/120 SEC, 1 PH, 60 HZ, NO TAP, RADIALFEED/FUSED/DEADFRONT, BAYONET/WEAK LINK	$ 943.39	1
TRANSFORMER, PAD MOUNT, 150 KVA, 12470GY/7200 PRI, 208Y/120 SEC, 3 PH, 60 HZ, NO TAP, LOOPFEED/FUSED/DEADFRONT, BAYONET/ISO. LINK/ARRESTER	$ 16,049.09	3
TRANSFORMER, PAD MOUNT, 150 KVA, 12470GY/7200 PRI, 480Y/277 SEC, 3 PH, 60 HZ, NO TAP, LOOPFEED/FUSED/DEADFRONT, BAYONET/ISO. LINK/ARRESTER	$ 5,076.41	1
TRANSFORMER, PAD MOUNT, 1500 KVA, 12470GY/7200 PRI, 480Y/277 SEC, 3 PH, 60 HZ, (2) 2-1/2% UP, (2) 2-1/2% DOWN TAP, LOOPFEED/FUSED/DEADFRONT	$ 37,994.62	2
TRANSFORMER, PAD MOUNT, 167 KVA, 12470GY/7200 PRI, 240/120 SEC, 1 PH, 60 HZ, NO TAP, LOOPFEED/FUSED/DEADFRONT, BAYONET/WEAK LINK	$ 9,597.44	3
TRANSFORMER, PAD MOUNT, 25 KVA, 12470GY/7200 PRI, 240/120 SEC, 1 PH, 60 HZ, NO TAP, LOOPFEED/FUSED/DEADFRONT, BAYONET/WEAK LINK	$ 7,596.07	7
TRANSFORMER, PAD MOUNT, 2500 KVA, 12470GY/7200 PRI, 480Y/277 SEC, 3 PH, 60 HZ, (2) 2-1/2% UP, (2) 2-1/2% DOWN TAP, LOOPFEED/FUSED/DEADFRONT	$ 25,665.83	1
TRANSFORMER, PAD MOUNT, 300 KVA, 12470GY/7200 PRI, 208Y/120 SEC, 3 PH, 60 HZ, NO TAP, LOOPFEED/FUSED/DEADFRONT, BAYONET/ISO. LINK/ARRESTER	$ 14,071.28	2
TRANSFORMER, PAD MOUNT, 50 KVA, 12470GY/7200 PRI, 240/120 SEC, 1 PH, 60 HZ, NO TAP, LOOPFEED/FUSED/DEADFRONT, BAYONET/WEAK LINK	$ 30,584.30	22
TRANSFORMER, PAD MOUNT, 50 KVA, 4160GY/2400 PRI, 240/120 SEC, 1 PH, 60 HZ, NO TAP, LOOPFEED/FUSED/DEADFRONT, BAYONET/ISOLATION LINK	$ 965.94	1
TRANSFORMER, PAD MOUNT, 75 KVA, 12470GY/7200 PRI, 240/120 SEC, 1 PH, 60 HZ, NO TAP, LOOPFEED/FUSED/DEADFRONT, BAYONET/WEAK LINK	$ 25,807.98	15
TRIMMER, TREE, 10FT LG, HAND, W/WOOD HANDLE SPEC. NO-1961-1	$ 480.03	3
TRIMMER, TREE, 12IN FIBERGLASS SHAFT, MANUAL, POLES	$ 104.13	1
TROWEL, POINTING, 5IN, STEEL, W/ WOODEN HANDLE	$ 36.60	3
TUBING, METALLIC, 1-1/4IN OD, 20FT LG, SEAMLESS, COPPER, GR L	$ 267.83	20
TUBING, METALLIC, 3/8IN OD, 50FT LG, 0.032IN THK, SEAMLESS, SOFT DRAWN COPPER	$ 72.03	100
TUBING, METALLIC, 7/8IN OD, 20FT LG, SEAMLESS, HARD DRAWN COPPER, GR K	$ 435.00	100
TUBING, METALLIC, 7/8IN OD, 60FT LG, 0.035IN THK, SEAMLESS, SOFT DRAWN COPPER, GR L	$ 771.62	120
TWINE, NO.30 MEDIUM LAID 1/16 IN. SEINE, 1/2 LB BALLS	$ 19.60	8
UNION, PIPE, 1-1/2IN, FNPT, BLACK MALLEABLE IRON, 150 LB	$ 13.94	2
UNION, PIPE, 1-1/4IN, FNPT, BLACK FORGED CARBON STEEL, 3000 LB LB, ASTM A105	$ 27.89	3
UNION, PIPE, 1-1/4IN, FNPT, BLACK MALLEABLE IRON, 150 LB	$ 28.11	5
UNION, PIPE, 1IN, FNPT, BLACK MALLEABLE IRON, 150 LB, UN-002-51, WITH GROUND JOINT BRASS/BRONZE SEAT	$ 125.61	31
UNION, PIPE, 2IN, FNPT, BLACK MALLEABLE IRON, 150 LB, UN-002-51	$ 50.72	6

Inventory Provided by Affiliate to Duke Energy Kentucky
For the Year Ended December 31, 2008

COMPANY_SOL CATALOG_DESC	Values Sum of SumOfTRANS_AMT	Sum of SumOfTRANS_QTY
UNION, PIPE, 3/4IN, FNPT, BLACK MALLEABLE IRON, 150 LB, UN-002-51	$ 33.58	10
UNION, PIPE, 3/4IN, FNPT, FORGED STEEL, 3000 LB, UN-002-51	$ 47.61	9
UNIT, CADWELD PLUS CONTROL UNIT, W/ 7FT LEAD WIRE, ELECTRIC IGNITION SOURCE	$ 298.97	4
UNIT, CADWELD PLUS CONTROL, W/ 15FT LEAD WIRE, ELECTRIC IGNITION SOURCE	$ 374.52	4
VALVE, 1IN, SW	$ 4,660.84	77
VALVE, BALL, 1" FULL PORT, 1000 WOG, THD NPT ENDS, INVESTMENT CAST SS BODY & END CAP, BLOW OUT PROOF STEM, PTFE SEAT, SEAL, PACKING & WASHER	$ -	0
VALVE, BALL, 1/2IN CTS, 125PSI, FUSIONXSTAB, PE 4710, FLP400, EXCESS FLOW, INLINE	$ 1,066.40	62
VALVE, BALL, 1/2IN, 600 LB, 450 DEG F, FNPT, BRONZE, 2-WAY, SS BALL AND STEM, PTFE PACKING SEAL, LEVER	$ 394.02	26
VALVE, BALL, 1/4IN, 600 LB WOG, 450 DEG F, FNPT, BRONZE, 2-WAY, SS BALL AND STEM, PTFE PACKING STEM, LEVER	$ 1,656.71	98
VALVE, BALL, 1-1/4IN IPS, 125PSI, FUSIONXSTAB, PE 4710, FLP1800, EXCESS FLOW, INLINE	$ 951.08	26
VALVE, BALL, 12", ANSI 300, 720 PSIG WOG, BEVELED WELD ENDS, 0.250 WELD, CARBON STEEL, .250 WALL, SIDE ENTRY TRUNNION, CS, VITON SEALS, GEAR	$ 122,115.51	9
VALVE, BALL, 12IN, FULL PORT, BUTT FUSION, PE 2406, 2-WAY, PE, ELASTOMERIC, 2IN SQ OPERATING NUT, W/ GEAR BOX ACTUATION,	$ 7,323.33	2
VALVE, BALL, 1IN CTS, 125PSI, FUSIONXSTAB, PE 4710, FLP800, EXCESS FLOW, INLINE	$ 5,038.20	277
VALVE, BALL, 1IN, 600 LB WOG, 450 DEG, FNPT, BRONZE, 2-WAY, NICKEL, TEFLON STEM, LEVER	$ 1,044.30	53
VALVE, BALL, 1IN, 750PSI, WELDED SCH 40, STEEL, FLP400, EXCESS FLOW, INLINE	$ 2,765.00	70
VALVE, BALL, 2IN, 300 LB 720 MOP, RF FLANGED, CARBON STEEL ASTM A53, 2-WAY, 18-8 SS STEM, 304 SS BALL, POLY TEFLON	$ 3,222.50	10
VALVE, BALL, 2IN, FULL PORT, BUTT FUSION W/SDR 11 ENDS, PE 2406, 2-WAY, PE, ELASTOMERIC, 90 DEGREE 2IN SQ.OPERATING NUT, MOLDED VALVE W/ FUS	$ 2,322.28	41
VALVE, BALL, 3/4IN, 600 LB WOG, 450 DEG F, FNPT, BRONZE, 2-WAY, NICKEL PLATED BRASS BALL, TEFLON SEALS AND SEATS, LEVER, BLOWOUT PROOF STEM	$ 5,237.56	376
VALVE, BALL, 3/4IN, 600 LB WOG, FNPT, BRONZE, 2-WAY, SS BALL AND STEM, REINFORCED TEFLON SEAT, LEVER, LOCKING DEVICE FOR PADLOCK	$ 277.16	8
VALVE, BALL, 3IN, FULL PORT, BUTT FUSION, PE 2406, 2-WAY, PE, ELASTOMERIC, 2IN SQ OPERATING NUT, MOLDED VALVE W/DR11.5 PE 2406 AND PCS	$ 1,024.35	9
VALVE, BALL, 4IN FULL PORT (3.63 IN ID), 120 PSI, ELECTROFUSION END X MPT END, POLYETHELENE, 2 IN SQ OPERATING NUT, BLACK PE100/3408	$ 4,276.51	12
VALVE, BALL, 4IN, 300 LB 720 MOP, RF FLANGED, CARBON STEEL ASTM A53, 2-WAY, 18-8 SS STEM, 304 SS BALL, POLY TEFLON	$ 6,479.20	8
VALVE, BALL, 4IN, FULL PORT, BUTT FUSION W/SDR 11.5 ENDS, PE 2406, 2-WAY, PE, ELASTOMERIC, 90 DEGREE 2IN SQ OPERATING NUT, MOLDED VALVE W/ F	$ 4,947.33	28
VALVE, BALL, 6IN FULL PORT (5.35IN ID), 120 PSI, ELECTROFUSION END X MPT END, POLYETHELENE, 2IN SQ OPERATING NUT, BLACK PE100/3408	$ 1,127.64	2
VALVE, BALL, 6IN, FULL PORT, BUTT FUSION, PE 2406, 2-WAY, PE, ELASTOMERIC, 90 DEGREE 2IN SQ OPERATING NUT, MOLDED VALVE W/ SDR 13.5 END PCS	$ 3,049.76	8
VALVE, BALL, 8IN, FULL PORT, BUTT FUSION, PE 2406, 2-WAY, PE, ELASTOMERIC, 90 DEGREE 2IN SQ OPERATING NUT, MOLDED VALVE W/ SDR 13.5, PE2406	$ 724.22	1
VALVE, BUTTERFLY, LUG, 2IN, 200 LB WOG, CAST IRON, ALUM BRONZE DISC,, BUNA-N SEAT, LEVER, 4/16IN SS SHAFT,10 POSITION DIT HANDLE	$ 60.36	1
VALVE, BUTTERFLY, LUG, 3IN, 200 LB WOG, FLANGED, CAST IRON, ALUM BRONZE DISC, CARBON STEEL STEM, BUNA-N SEAT, LEVER	$ 65.79	1
VALVE, BUTTERFLY, LUG, 4IN, 200 LB WOG, FLANGED, CAST IRON, ALUM BRONZE DISC, CARBON STEEL STEM, BUNA-N SEAT, LEVER	$ 302.40	4
VALVE, BUTTERFLY, LUG, 6IN, 200 LB WOG, FLANGED, CAST IRON, ALUM BRONZE DISC, CARBON STEEL STEM, BUNA-N SEAT, LEVER	$ 578.00	4
VALVE, CHECK, SWING, 12IN, X-42, ANSI 300, WELD X WELD, CARBON STL, CARBON STL, PIGGABLE, WITH REMOVABLE SEAT	$ 18,364.70	1
VALVE, GATE, FLEX WEDGE, 3/4IN, 150PSI STEAM, 300PSI WOG, 406 DEG, FNPT, BRASS, THD BONNET, INSIDE SCREW NON RISING, BRASS STEM AND DISC, GR	$ 27.60	1
VALVE, GATE, FLEXIBLE WEDGE, 2IN, 275 PSIG WOG, 250 DEG F, BW (0.154 WALL) X FL (ANSI 150), CAST STEEL ASTM A216 GR WCB, BOLTED BONNET, INSI	$ 312.42	1
VALVE, GATE, NON-RISING, 2IN, 500 PSIG WOG, 200F, BW (0-154IN WALL) X FL (ANSI 300), CAST STEEL, BOLTED BONNET, INSIDE SCREW, BUNA-N, 2IN SQ	$ 7,510.43	17
VALVE, GATE, NON-RISING, 4IN, 275 PSIG WOG, 200F, BW (0.188IN WALL) X FL (ANSI 150), CARBON STEEL, BOLTED BONNET, INSIDE SCREW, BUNA-N, COAT	$ (8.32)	0
VALVE, GATE, NON-RISING, 4IN, 275 PSIG WOG, 200F, BW X BW, 0.188IN WALL, CARBON STL, BOLTED BONNET, RISING, INSIDE SCREW, BUNA-N, 2IN SQ NUT	$ 1,661.17	3
VALVE, GATE, NON-RISING, 4IN, 500 PSIG WOG, 200F, BW (0.188IN WALL) X FL (ANSI 300), CAST STEEL GR WCB, BOLTED BONNET, INSIDE SCREW, BUNA-N	$ 1,536.70	2
VALVE, GATE, NON-RISING, 4IN, 720 PSIG WOG, 200F, FL X FL (ANSI 300), CARB STL, ASTM A216 GR WCB, BOLTED BONNET, INSIDE SCREW, BUNA-N, 2IN S	$ 2,300.00	2
VALVE, GATE, NON-RISING, 4IN, 750 PSIG WOG, 200F, BW (0.188IN WALL) X FL (ANSI 300), CARBON STEEL ASTM A216 GR WCB, BOLTED BONNET, INSIDE SC	$ 10,407.85	11
VALVE, GATE, NON-RISING, 6IN, 275 LB WOG, 200F, BW X BW, 0.250IN WALL, CAST STL GR WCB, BOLTED BONNET, INSIDE SCREW, BUNA-N, 2IN SQ NUT, COA	$ -	0
VALVE, GATE, NON-RISING, 6IN, 275 PSIG WOG, 200F, BW (0.250IN WALL) X FL (ANSI 150), CAST STEEL ASTM A216, BOLTED BONNET, INSIDE SCREW, BUNA	$ 1,259.44	1
VALVE, GATE, NON-RISING, 6IN, 500 PSIG WOG, 200F, BW (0.188IN WALL) X FL (ANSI 300), CAST STEEL, BOLTED BONNET, INSIDE SCREW, BUNA-N, 2IN SQ	$ 4,882.99	2
VALVE, GATE, NON-RISING, 6IN, 720 PSIG WOG, 200 F, FL X FL, ANSI 300, STL, ASTM A-216, BOLTED BONNET, INSIDE SCREW, SS, BUNA-N O-RINGS, V-RI	$ 14,040.00	4
VALVE, GATE, NON-RISING, 6IN, 720 PSIG WOG, 200F, BW (0.250IN WALL) X FL (ANSI 300), CAST STEEL, BOLTED BONNET, INSIDE SCREW, BUNA-N, 2IN SQ	$ 8,249.45	3
VALVE, GATE, NON-RISING, 8IN, 275 PSIG WOG, 200 F, BW (0.265IN WALL) X FL (ANSI 150), CAST STEEL ASTM A216 GR WCB, BOLTED BONNET, INSIDE SCR	$ 2,102.46	1
VALVE, GATE, SOLID WEDGE, 2IN, 125 LB, 450, FLANGED, CAST IRON, BOLTED BONNET, RISING, OUTSIDE SCREW AND YOKE, BRASS STEM AND DISC, NON-ASBE	$ 848.60	6
VALVE, GATE, SOLID WEDGE, 3IN, 125 LB, 450 DEG, FLANGE, CAST IRON, BLT BONNET, RISING, OUTSIDE SCREW AND YOKE, BRONZE, NON-ASBESTOS, HAND WH	$ 151.67	1
VALVE, GATE, SOLID WEDGE, 4IN, CL 125, 125 PSI @ 450 DEG, 200 WOG, FLANGED, CAST IRON, BOLTED BONNET, RISING, OUTSIDE SCREW AND YOKE, BRASS	$ 216.83	1
VALVE, GLOBE, 1/4IN, 1000 LB, THD, FORGED STEEL, THD BONNET, INSIDE SCREW, CARBON STEEL DISC AND STEM, T-HANDLE	$ 121.40	4
VALVE, NEEDLE, 1/2IN, 10000 LB, FORGED STEEL	$ 1,114.56	32
VALVE, PLUG - NON-LUBRICATED, 4", 175 PSIG WOG LB, FLANGED, ANSI 125, DUCTILE IRON, BOLTED BONNET, WRENCH, W/ LOCKING PLATE	$ 553.50	2
VALVE, PLUG, NON-LUBRICATED, 2IN, 175 PSIG WOG LB, FLANGED, ANSI 125, DUCTILE IRON, WRENCH, W/ LOCKING PLATE	$ 178.94	2
VALVE, PLUG, NON-LUBRICATED, 3", 175 PSIGN, WOG LB, FLANGED, ANSI 125, DUCTILE IRON, N/A, WRENCH, W/ LOCKING PLATE	$ 2,720.44	14
VALVE, RELIEF, 1FT INLET, 300 LB. MAX, 25 LB. SET, -20 DEG F TO 160 DEG F, 25-30 PSIG, THD, BRASS, DISC-NITRILE, SPRING-SST, SPRING OPERATED	$ 5,424.48	66
VALVE, RELIEF, 1IN INLET, 300 LB. MAX, 25 LB. SET, -20 DEG F TO 160 DEG F, 25-30 PSIG, THD, BRASS, DISC-NITRILE, SPRING SST, SPRING OPERATED	$ 329.60	4
VALVE, RELIEF, 2IN X 1-3/4IN, 125 ANSI, 10 PSIG, FLANGED, CAST IRON, F/ KENTUCKY	$ 715.40	1
VALVE, RELIEF, 2IN X 2IN, 125 ANSI, 9 SET, IRON, FOR USE IN KY.	$ 715.40	1

Inventory Provided by Affiliate to Duke Energy Kentucky
For the Year Ended December 31, 2008

COMPANY_SOL CATALOG_DESC	Values Sum of SumOfTRANS_AMT	Sum of SumOfTRANS_QTY
VALVE, RELIEF, 3IN X 3IN, 9 PSIG SET, FLANGE, CAST IRON, FOR USE IN KENTUCKY	$ 983.50	1
VALVE, RELIEF, 6IN X 8IN, 16.5 IN W.C. SET, 2IN WC TO 50 PSIG, ANSI 150 FLAT FACE FLANGED ENDS, CARBON STEEL A216-WCB, BUNA N, PILOT	$ 8,502.00	1
VALVE, SOLENOID, 1/4", 3/16" ORIF, 120VAC 60HZ, FNPT, BRASS, 4-WAY, 125 LB AIR, GAS, 100 LB WATER, OIL, NEMA 4, 2 POSITION, 1/2" CONDUIT CON	$ 206.42	1
VENT, ANGLE, 1IN, ALUMINUM, SAFETY	$ 403.20	128
VENT, MONITOR, 1/4IN, XENOY/18-8 SST	$ 144.00	12
VEST, TRAFFIC SAFETY, FITS 2 XL-4XL, LIGHTWEIGHT FR MODACRYLIC, YELLOW-GREEN, DUKE ENERGY LOGO IN BLACK PRINT ON UPPER MIDDLE	$ 1,560.00	24
VEST, TRAFFIC SAFETY, FITS MEDIUM - X-LARGE, LIGHTWEIGHT FR MODACRYLIC, YELLOW-GREEN, DUKE ENERGY LOGO, CL II	$ 2,236.51	42
VEST, TRAFFIC, 2XL - 4XL, THIN MESH KNIT POLYESTER, LIME GREEN W/SCOTCHLITE REFLECTIVE STRIPES, NON FLAME RESIST	$ 16.82	1
VEST, TRAFFIC, 2XL - 4XL, THIN MESH KNIT POLYESTER, LIME GREEN W/SCOTCHLITE REFLECTIVE STRIPES, NON FLAME RESISTANT	$ 413.43	15
VEST, TRAFFIC, MEDIUM - X-LARGE, THIN MESH KNIT POLYESTER, LIME GREEN W/SCOTCHLITE REFLECT STRIPE, NON FLAME RESISTANT, ADJUSTABLE	$ 1,987.70	80
VISOR, LINEMANS VISOR GOGS, GREEN WITH CLEAR COLORLESS LENS	$ 19.79	5
VISOR, SAFETY, 8IN HT X 12IN WD X 0.040IN THK, MOLDED PROPIONATE, CLEAR, USE W/ 0000650211 HEADGEAR	$ 6.76	2
WAND, GAS INDICATOR, 1/4IN DIA X 36IN LG, METAL	$ 733.02	6
WAND, GAS INDICATOR, 3/8IN DIA X 36IN LG, PLASTIC	$ 333.06	4
WAND, SAFETY, TRAFFIC, 16IN, RED, WITH RED LIGHT TUBE AND LED FLASHLIGHT	$ 92.09	4
WASHER, BELLEVILLE, 1/2IN NOM, 1.063IN OD, .083IN THK, 17-7PH STAINLESS STEEL	$ 13.48	25
WASHER, FLAT, 1/2IN NOM, .563IN ID, 1.25IN OD, .091IN THK, SILICON BRONZE, 50 EA/BX	$ 742.26	1,269
WASHER, FLAT, 1/2IN NOM, 9/16IN ID, 1-1/4IN OD, 0.078IN THK, 18-8 SS, 100 EA/BX	$ 246.99	3,606
WASHER, FLAT, 1/4IN NOM, 1/4IN ID, 11/16IN OD, 1/16IN THK, BRASS, 50 EA/BX	$ 1.52	100
WASHER, FLAT, 1/4IN NOM, 1/4IN ID, 11/16IN OD, 1/32IN THK, EVERFDUR, 100 EA/BX	$ 2.78	36
WASHER, FLAT, 3/8IN NOM, 13/32IN ID, 7/8IN OD, 1/16IN THK, EVERDUR, 100 EA/BX	$ 89.28	500
WASHER, FLAT, 3/8IN NOM, 7/16IN ID, 1IN OD, 0.064IN THK, GALV STEEL	$ 67.29	900
WASHER, FLAT, 5/8IN NOM, 11/16IN ID, 1-3/4IN OD, 0.102IN THK, GALV STEEL	$ 1.89	11
WASHER, LOCK, BELLEVILLE, 0.531IN ID, 1.063IN OD, 0.109IN THK, 301 SS, HARDNESS RC41	$ 539.00	1,594
WASHER, LOCK, DOUBLE COIL SPRING, 1/2IN NOM, GALV. STEEL	$ 3.00	25
WASHER, LOCK, DOUBLE COIL SPRING, 3/4IN NOM, GALV. STEEL, DYKO PLATED SPRING LOCK WASHER	$ 150.06	625
WASHER, LOCK, DOUBLE COIL SPRING, 3/8IN NOM, GALV. STEEL	$ 2.75	25
WASHER, LOCK, DOUBLE COIL SPRING, 5/8IN NOM, GALV. STEEL, STD PKG - 750 PER/PK	$ 219.25	1,475
WASHER, LOCK, SPLIT LOCK, 1/4IN NOM, 1/4IN ID, 7/16IN OD, 1/16IN THK, EVERDUR, 100 EA/BX	$ 1.01	36
WASHER, LOCK, SPLIT, 3/8IN NOM, 3/8IN ID, 27/32IN OD, 1/16IN THK, SILICONE BRONZE, 100 EA/BX	$ 23.25	200
WASHER, LOCK, SPRING, 1/2IN NOM, 0.523IN ID, 0.873IN OD, 0.125IN THK, EVERDUR, B GR, 100 EA/BX	$ 168.02	800
WASHER, LOCK, SPRING, 1/2IN NOM, 9/16IN ID, 1/8IN THK, GALV STEEL, B GR	$ 118.52	1,676
WASHER, LOCK, SPRING, 3/8IN NOM, 7/16IN ID, 1/8IN THK, GALV STEEL, B GR	$ 46.95	514
WASHER, LOCK, SPRING, 5/8IN NOM, 11/16IN ID, 1/8IN THK, GALV STEEL, B GR	$ 9.05	81
WASHER, SEALING, 1" NOM, 1" ID, 1-5/16" OD, 1/8" THK, RUBBER, 10 LT METER SWIVEL	$ 3,786.13	18,706
WASHER, SEALING, 1-1/2IN NOM, 1-23/32IN ID, 2-1/8IN OD, 1/8IN THK, NEOPRENE	$ 151.06	1,079
WASHER, SEALING, 1-1/4IN NOM, 1-1/4IN ID, 1-13/16IN OD, 1/8IN THK, RUBBER, 20 LT METER WASHER	$ 21.45	98
WASHER, SEALING, 3/4IN NOM, 3/4IN ID, 1IN OD, 1/8IN THK, RUBBER	$ 17.85	100
WASHER, SQUARE CURVED, 1/2IN NOM, 2IN ID, 2IN OD, 1/8IN THK, GALV. STEEL, F/1/2IN BOLT	$ 127.60	790
WASHER, SQUARE CURVED, 3IN NOM, 13/16IN ID, 3IN OD, 1/4IN THK, GALV. STEEL, F/ 3/4IN BOLT	$ 963.27	1,424
WASHER, SQUARE CURVED, 4IN NOM, 15/16IN ID, 4IN OD, 1/4IN THK, GALV. STEEL	$ 332.35	254
WASHER, SQUARE, 3/4IN NOM, 2-1/4IN ID, 2-1/4IN OD, 3/16IN THK, GALV	$ 2,196.52	9,020
WASHER, U SHAPED CROSSARM, 3/4IN NOM, 1/4IN ID, 4IN X 3IN OD, 1/4IN THK, STEEL	$ 2.59	1
WAX, PIPE, 24 LB PAIL, SUMMER GRADE	$ 940.56	19
WAX, PIPE, 24 LB PAIL, WINTER GRADE	$ 1,009.02	19
WAX, PIPE, 7.5 LB BLOCKS	$ 4,518.37	1,878
WEDGE, 2IN X 2IN X 9IN, OAK WOOD	$ 114.40	520
WEDGE, SPLITTING, 1-1/2IN WD X 9IN LG X (0IN TO 3IN) THK, AISI W2 TOOL STEEL	$ 462.49	8
WELDER, THERMO, SPARK	$ 209.01	6
WHEEL, CUTTING	$ 196.99	15
WHEEL, CUTTING, 1-1/2IN DIA, STEEL	$ 302.49	20
WHEEL, CUTTING, 12IN DIA, 1/8IN WD, 20MM, 6370 RPM	$ 127.60	40
WHEEL, CUTTING, 1-3/4IN DIA, STEEL	$ 130.16	8
WHEEL, CUTTING, 1-5/8IN DIA, STEEL	$ 130.16	8
WHEEL, GRINDING, 4-1/2IN DIA, 1/32IN WD, 7/8IN, TYPE 27, A60S GRIT, 13,300 RPM	$ 78.00	40
WHEEL, GRINDING, 4-1/2IN DIA, 3/32IN WD, 7/8IN, A24R, TYPE 27, CUTOFF	$ 42.00	35
WIPE, ALL PURPOSE, 13IN X 13IN, PAPER, HEAVY DUTY WHITE, 1/4 FOLD,12 PKS/CASE- 76/PAK, TOTAL 912 COUNT	$ 2,443.86	44,608

Inventory Provided by Affiliate to Duke Energy Kentucky
For the Year Ended December 31, 2008

COMPANY_SOL CATALOG_DESC	Values Sum of SumOfTRANS_AMT	Sum of SumOfTRANS_QTY
WIPE, GLASS AND WINDOW CLEANER, 7IN X 8IN, WHITE TOWEL, PRE-MOISTENED ALCOHOL/AMMONIA FREE	$ 23.94	3
WIPE, RESPIRATOR CLEANING, 6IN X 8IN APPROX, CELLULOSE, ALCOHOL FREE	$ 81.51	300
WIPE, TOWELETTE HAND CLEANER, 130 CT BUCKET, PRE MOISTENED TEXTURED POLYPROPYLENE, F/CLEANING HANDS, TOOLS, PARTS, SURFACES	$ 29.24	2
WIRE, ELECTRICAL, BARE, 6 AWG, SOLID, SOFT DRAWN COPPER, NONE INS, 25 LB SPOOL	$ 6,468.50	1,626
WIRE, ELECTRICAL, POWER, 6 AWG, SOLID, SOFT DRAWN COPPER, POLY COVERED INS, 75 DEG C, 11.6279 FT/LB	$ 2,281.50	639
WIRE, GUY, 5/16IN, EHS GALV STEEL, 7, 11200 LB, GRADE A COATING STD PKG, SHIP ON 500 FT COIL	$ 7,910.08	39,050
WIRE, GUY, 7/16IN, GALV STEEL, 7, 20800 LB, GRADE A COATING, .343 DIA (7 X .114IN, RATED	$ 164.98	500
WIRE, TIE, 4 AWG, SOFT DRAWN ALUM. BARE, SOLID, SHIP ON 25# SPOOL, 0.0384 LB/FT 26.042 FT/LB	$ 1,041.66	325
WIRE, TIE, 6 AWG, SOFT DRAWN COPPER, BARE, SOLID, DEAD SOFT UTILITY GRADE, SHIP ON 25# SPOOLS 0.0795 LB/FT, 12.5849 FT/LB	$ 566.32	150
WIRE, WELDING, SIVER 15, 0.125IN, 1 LB BOX, 8 SIVER/LB	$ 505.01	8
WIRE/CABLE, #2, CONCH, 3/C, ALUM TRIPLEX, ACSR 6X1 NEUT,	$ 237.42	500
WIRE/CABLE, #2, CONCH, 3/C, ALUM TRIPLEX, ACSR 6X1 NEUT.	$ 23,589.67	48,444
WIRE/CABLE, #6 VOLUTA, 3/C, (2) 6 ALUM, (1) 6ACSR6X1 NEUT, TRIPLEX	$ 2,927.41	11,000
WIRE/CABLE, 1/0 COSTENA, 4/C, (3) 1/0 ALUM, (1) 1/0 ACSR6X1 NEUT	$ 1,367.82	1,200
WIRE/CABLE, 1/0, NERTINA, 3/C, ALUM TRIPLEX, 1/0 ACSR 6X1 NEUT, 1200FT REEL	$ 24,209.16	27,140
WIRE/CABLE, 4/0, 3/C, (2) 4/0 ALUM, (1) 1/0 ACSR6X1 TRIPLEX	$ 3,271.27	3,000
WIRE/CABLE, BARE ELECTRICAL, DAHILIA, 19 STRAND, 556.5 KCMIL, ALL ALUMINUM, 0.521 LB/FT, 1.9193 FT/LB	$ 87,153.02	52,782
WIRE/CABLE, BARE ELECTRICAL, GROUND, 7 STRAND, 2/0 AWG, SOFT DRAWN COPPER, 0.4109 LB/FT, 2.4337 FT/LB	$ 1,874.52	494
WIRE/CABLE, BARE ELECTRICAL, GROUND, 7/7/65/40 STRAND, 5 AWG, COPPER, FLEXIBLE ROPE LAY	$ 301.00	250
WIRE/CABLE, BARE ELECTRICAL, GROUND, SOLID, 4AWG, SOFT DRAWN BARE, 0.1264 LB/FT, 7.9114 FT/LB	$ 23,605.60	6,025
WIRE/CABLE, BARE ELECTRICAL, MAGNOLIA, 37 STRAND, 954 KCM, ALUM, 1.124IN DIA	$ 2,104.09	1,017
WIRE/CABLE, BARE ELECTRICAL, PENGUIN, 6/1 STRAND, 4/0 AWG, ACSR, 0.927IN DIA OVER ARMOR ROD, RIGHT HAND	$ 29,205.70	21,214
WIRE/CABLE, BARE ELECTRICAL, POWER, (37) STRAND, 500 KCMIL, MEDIUM HARD DRAWN COPPER, STD PKG - 100 LB PER/PALLET	$ 824.38	200
WIRE/CABLE, BARE ELECTRICAL, RAIL, 45/7 STRAND, 954 KCM, ACSR	$ 16,734.08	10,712
WIRE/CABLE, BARE ELECTRICAL, RISER WIRE, SOLID, 2 AWG, 1 COPPER	$ 1,073.82	150
WIRE/CABLE, BARE ELECTRICAL, SPARROW, 6/1 STRAND, 2 AWG, ACSR, .316 DIA, 0.091LBS/FT, 10.99FT/LBS	$ 1,688.72	1,173
WIRE/CABLE, BARE ELECTRICAL, TANDD, SOLID, 4/0, COPPER	$ 949.29	100
WIRE/CABLE, INSULATED ELECTRICAL, MTW/THHN/THWN, 1, 10 AWG, COPPER, 19 STRAND, 600 V @ 75 DEG C. WET, 90 DEG. C DRY, PVC, NYLON, GREEN	$ 57.32	500
WIRE/CABLE, INSULATED ELECTRICAL, 2/0, 3, (1) 1 AWG, (2) 2/0 AWG, ALUM, 19 STRAND, 600V @ 90 DEG C, XLPE, XLPE, ABRASIVE RESISTANT JCT	$ 1,653.09	2,000
WIRE/CABLE, INSULATED ELECTRICAL, 4/0 AWG, HARD DRAWN COPPER, (7) STRAND, POLYETHYLENE	$ 920.00	100
WIRE/CABLE, INSULATED ELECTRICAL, BUILDING, RHH OR RHW-2, 1, 6 AWG, COPPER COATED, STR, 600V, 90 DEG C, EPR, HYP CSP, BLACK, 1/C - 45 MILS O	$ 1,997.23	3,000
WIRE/CABLE, INSULATED ELECTRICAL, CONTROL TC, 7, 14 AWG, TIN OR COATED COPPER, UNSHIELD, STR, 600V, 90 DEG C, XLP, HYP CSP, ICEA METHOD-1-K1	$ 1,177.11	960
WIRE/CABLE, INSULATED ELECTRICAL, CONTROL, TC, (4) 10 AWG, COPPER, 7 STRAND, 600V 90 DEG C, 750 WET, PVC, PVC, YELLOW, BLUE, ORANGE, BROWN	$ 1,100.00	1,000
WIRE/CABLE, INSULATED ELECTRICAL, CONTROL, TC, (4) 10 AWG, COPPER, 7 STRAND, 600V, 90 DEG C, PVC, PVC, BLACK, GREEN, RED, WHITE	$ 4,085.00	4,300
WIRE/CABLE, INSULATED ELECTRICAL, CONTROL, TC, 4, 10 AWG, TIN OR COATED COPPER UNSHIELDED, STR, 600V, 90 DEG C, FREP, CPE, RED,BLK,WHT,GRN	$ 2,309.38	1,900
WIRE/CABLE, INSULATED ELECTRICAL, CRIOLLO, 1/0, 4/C, 19 STRAND, QUADRUPLEX, 1200FT/REEL	$ 1,156.22	1,153
WIRE/CABLE, INSULATED ELECTRICAL, DISTRIBUTION, 2 AWG, MEDIUM HARD DRAWN COPPER, SOLID, POLY, WEATHER PROOF	$ 8,653.00	1,018
WIRE/CABLE, INSULATED ELECTRICAL, MTW, 1, 12 AWG, COOPER, 19 STRAND, 600 V, PVC, BLACK, 250 FT REEL	$ 57.00	500
WIRE/CABLE, INSULATED ELECTRICAL, MTW, 1, 12 AWG, COOPER, 19 STRAND, 600 V, PVC, BROWN, 250 FT REEL	$ 79.00	500
WIRE/CABLE, INSULATED ELECTRICAL, MTW, 1, 12 AWG, COOPER, 19 STRAND, 600 V, PVC, ORANGE, 250 FT REELS	$ 82.18	750
WIRE/CABLE, INSULATED ELECTRICAL, MTW, 1, 12 AWG, COOPER, 19 STRAND, 600 V, PVC, YELLOW, 250 FT REEL	$ 56.02	500
WIRE/CABLE, INSULATED ELECTRICAL, MTW, 1, 12AWG, COOPER, 19 STRAND, 600 V, PVC, BLUE, 250 FT REEL	$ 58.00	500
WIRE/CABLE, INSULATED ELECTRICAL, MTW, 1, 12AWG, COOPER, 19 STRAND, 600 V, PVC, GREEN, 250 FT REEL	$ 57.38	500
WIRE/CABLE, INSULATED ELECTRICAL, MTW, 1, 12AWG, COPPER, 19 STRAND, 600 V, PVC, RED, 250 FT REEL	$ 58.00	500
WIRE/CABLE, INSULATED ELECTRICAL, MTW, 1, 12AWG, COPPER, 19 STRAND, 600 V, PVC, WHITE, 250 FT REEL	$ 58.00	500
WIRE/CABLE, INSULATED ELECTRICAL, MUSTANG/XLP, #2, ALUMN, 7 STRAND, POLYETHYLENE, QUADRUPLEX, 500FT / COIL	$ 1,525.00	500
WIRE/CABLE, INSULATED ELECTRICAL, POWER, 2, (2) 6 AWG, ALUM, 7 STRAND, 600V @ 90 DEG C, XLPE, XLPE, 3/4 HARD, 78 MIL	$ 614.81	1,976
WIRE/CABLE, INSULATED ELECTRICAL, POWER, 6, (2) 6 AWG, ALUM, 7 STRAND, 600V @ 90 DEG C, XLPE, XLPE, SURE SEAL	$ 1,913.46	6,600
WIRE/CABLE, INSULATED ELECTRICAL, REINFORCED TRACER WIRE, 1, 12 AWG, STEEL CORE COPPER CLADDING, SOLID, HDPE, YELLOW	$ 805.01	11,500
WIRE/CABLE, INSULATED ELECTRICAL, REINFORCED TRACER WIRE, 1, 12 AWG, STEEL CORE COPPER CLADDING, SOLID, HDPE, YELLOW, 2500 FOOT SPOOL	$ 301.94	2,500
WIRE/CABLE, INSULATED ELECTRICAL, RIDER, 3, (1) 350, (2) 500 KCM, ALUM, (3) 37 STRAND, 600V @ 90 DEG C, XLPE	$ 2,163.66	685
WIRE/CABLE, INSULATED ELECTRICAL, STABILOY, 500 KCM, ALUM, 37 STRAND, 2-ALCAN	$ 2,581.54	2,000
WIRE/CABLE, INSULATED ELECTRICAL, STREET LIGHT MAST, #12, ANNEALED COPPER, SOLID, PVC	$ 422.19	3,250
WIRE/CABLE, INSULATED ELECTRICAL, STREET LIGHT MAST, 12 AWG, ANNEALED COPPER, (1) SOLID, 600 V, XLPE, BLACK	$ 626.52	4,750
WIRE/CABLE, INSULATED ELECTRICAL, THNN, 1, 10 AWG, COPPER, SOLID, 600V, POLYETHYLENE, BLACK	$ 73.63	500
WIRE/CABLE, INSULATED ELECTRICAL, TRACER, 1, 12 AWG, COPPER, SOLID, 600 V, 45 MIL PE, YELLOW	$ 17,283.97	115,500
WIRE/CABLE, INSULATED ELECTRICAL, TRACER, 12 AWG, COPPER, SOLID, 600 V, BLACK	$ 366.00	2,000

Inventory Provided by Affiliate to Duke Energy Kentucky
For the Year Ended December 31, 2008

COMPANY_SOL	CATALOG_DESC	Values Sum of SumOfTRANS_AMT	Sum of SumOfTRANS_QTY
	WIRE/CABLE, INSULATED ELECTRICAL, WEATHER PROOF, 4, MEDIUM HARD DRAWN COPPER, SOLID, POLYETHYLENE	$ 1,856.25	225
	WIRE/CABLE, INSULATED ELECTRICAL, WHIPPET, 4 AWG, (1) POLY, (1) BARE, (1) 7 STR BARE, 600 V, AA/AAA	$ (108.49)	-500
	WIREHOLDER, PIPE INSULATOR, NYLON ALLOY, GALV STEEL, 2IN TO 3.5IN O.D. PIPE MTG	$ 103.00	25
	WIREHOLDER, SCREW, NYLON ALLOY, GALV STEEL SCREW, 5/16IN DIA X 4IN SCREW	$ 920.98	300
	WIREHOLDER, SCREW, NYLON ALLOY, GALV STEEL SCREW, 5/16IN X 2-1/4IN MOUNTING SIZE	$ 1,538.64	560
	WRENCH SET, ALLEN, .05IN TO, 5/32IN, 3IN HANDLE, FOLD UP, 8 PIECE	$ 70.88	16
	WRENCH SET, ALLEN, 14 PIECE, 3/32IN THROUGH, 5/8IN, 3-1/8IN THROUGH 9-3/4IN, L, STEEL, KIT BAG	$ 82.74	6
	WRENCH SET, ALLEN, 5 PIECE, 3/16IN THRU, 3/8IN, 5IN, L, STEEL, HARD SHELL COMPOSITE GRIP HANDLE, FOLDING	$ 52.44	9
	WRENCH SET, OPEN END, 5 WRENCHES, 10 WRENCH ENDS, 3/8IN, 13/16IN, ALLOY STEEL, VINYL KIT	$ 184.84	4
	WRENCH SET, RATCHETING BOX END, 5 PIECE, 1/4IN, 7/8IN, 12 POINT, CHROME PLATED STEEL, 5 POCKET POUCH	$ 125.64	2
	WRENCH, ADJUSTABLE, 1/2IN CAP, 4IN LG, STEEL, W/ CLICK STOP	$ 45.12	4
	WRENCH, ADJUSTABLE, 1-1/2IN CAP, 12IN LG, BLACK STEEL	$ 615.62	30
	WRENCH, ADJUSTABLE, 1-1/8IN CAP, 8IN LG, STEEL, BLACK	$ 103.23	9
	WRENCH, ADJUSTABLE, 1-15/16IN CAP, 15IN LG, STEEL,BLACK	$ 147.65	4
	WRENCH, ADJUSTABLE, 1-5/16IN CAP, 10IN LG, STEEL	$ 333.70	26
	WRENCH, ADJUSTABLE, 15/16IN CAP, 6IN LG, STEEL	$ 66.59	6
	WRENCH, ADJUSTABLE, 3/8IN TO 1-1/4IN CAP, 10IN-17IN LG, CHROME PLATED STEEL, BASIN ADJUSTABLE SHANKS	$ 267.58	9
	WRENCH, ALLEN, 5/16IN, 10IN LG LG	$ 40.04	9
	WRENCH, ALLEN, 5/16IN, 8IN LG, STEEL	$ 81.01	3
	WRENCH, ALLEN, 7/32IN, 1-1/4IN LG, STEEL, HEX, W/PIN HOLE DRILL EA END	$ 13.50	3
	WRENCH, BOX END, RATCHETING, 9/16IN X 3/4IN, 8-3/8IN LG, W/INSUL HANDLE FITS BUSHING CONNECTORS ON LINE, TYPE TRANSFORMERS & CONNECTORS ON L	$ 594.22	30
	WRENCH, BOX END, REVERSIBLE ALLEN, 5/16IN ON ONE END AND 3/8IN ON OTHER END, 8.74IN LG, 6 PNT, IMPACT POLYPROPYLENE	$ 664.64	10
	WRENCH, COMBINATION, BOX/OPEN, 1/2IN, 7IN LG, 12, CHROME PLATED STEEL	$ 14.82	2
	WRENCH, COMBINATION, BOX/OPEN, 1-1/4IN, 16-3/4IN LG, 12, CHROME PLATED STEEL	$ 35.93	1
	WRENCH, COMBINATION, BOX/OPEN, 15/16IN, 12-3/8IN LG, 12 POINT, CHROME PLATED STEEL	$ 17.28	1
	WRENCH, COMBINATION, BOX/OPEN, 9/16IN, 7-1/2IN LG, 12, CHROME PLATED STEEL	$ 18.72	2
	WRENCH, IMPACT, 1/2IN DRV, 8500 RPM, 50-400 FT LB, AIR	$ 1,924.93	7
	WRENCH, PIPE LINE SAFETY PLUG, CARBON STEEL	$ 122.42	6
	WRENCH, PIPE, 1-1/2IN CAP, 10IN LG, STEEL, STD PKG/6	$ 301.66	15
	WRENCH, PIPE, 1IN CAP, 8IN LG, STEEL, STD PKG/6	$ 27.04	2
	WRENCH, PIPE, 2-1/2IN CAP, 18IN LG, ALUMINUM	$ 271.95	5
	WRENCH, PIPE, 2-1/2IN PIPE CAP, 18IN LG, CAST IRON, REPLACEABLE JAWS	$ 295.20	8
	WRENCH, PIPE, 24IN LG, STD PKG/6	$ 323.93	6
	WRENCH, PIPE, 2IN PIPE CAP, 12IN LG, CAST-IRON, STD PKG/6	$ 69.99	3
	WRENCH, PIPE, 2IN PIPE CAP, CAST-IRON, STD PKG/6	$ 233.81	9
	WRENCH, PIPE, 3IN CAP, 24IN LG, ALUMINUM	$ 259.02	3
	WRENCH, PIPE, 5IN CAP, 36IN LG, STEEL/ALUM, NA.	$ 142.45	1
	WRENCH, RATCHET, 1/2IN DRV, 10IN X ROUND HD LG, CHROME PLATED STEEL	$ 539.42	14
	WRENCH, RATCHET, 3/8IN DRV, 10-1/2IN LG, CHROME PLATED STEEL	$ 54.20	2
	WRENCH, STANDARD TAPPING TEE WRENCH, F/ TEE CAPS W/ 1IN AND SMALLER OUTLETS, METAL, F/ USE W/ MT DEASON TAPPING TEES ONLY]	$ 36.40	4
	WRENCH, STREET BOX, 8IN LG, STEEL, 5 POINT	$ 590.52	6
	WRENCH, TAP, TEE HANDLE, 1-1/4IN TAP, 14IN LG, STEEL	$ 37.92	2
	WRENCH, TAP, TEE HANDLE, 2IN TAP, 17IN LG, TUBULAR STEEL	$ 42.07	1
	WRENCH, TAPPING TEE T, 1IN HEX, STEEL, HI-VOLUME	$ 85.62	2
	WRENCH, TAPPING, 1/2IN HEX, STEEL, FOR ELECTROFUSION FOR LVTT AND MUTT	$ 42.59	2
010 Total		$ 8,122,227.90	1,378,464
100	PUMP, ANALYZER, 4IN H X 4IN L X 2FTW, 5 LPM, 115 V, 50/60HZ, 110VAC, SO2 ANALYZER PUMP W/PLATE & FITTINGS	$ 606.00	1
	TRANSFORMER, OVERHEAD, CONV, POLE, 100 KVA, 7200/12470Y PRI, 120/240 SEC, 1 PH, 60 HZ, NO TAP, NO ARRESTER	$ (3,753.00)	-3
	VALVE, BALL, 1/2IN, 600 LB WOG, 450 DEG F, FNPT, BRONZE, 2-WAY, NICKEL PLATED BRASS BALL, PTFE PACKING SEAL, LEVER	$ 11.26	2
100 Total		$ (3,135.74)	0
Grand Total		$ 8,119,092.16	1,378,464

Inventory Provided by Duke Energy Kentucky to Affiliate
For the Year Ended December 31, 2008

COMPANY_CHARGE	CATALOG_DESC	Values Sum of SumOfTRANS_AMT	Sum of SumOfTRANS_QTY
010	ABSORBENT, FLOOR SWEEP, SAND AND OIL, RED, 100 LB BOX	$ 16.02	1.0
	ADAPTER, BEARING, 1-1/4IN ID X 2IN - 2-9/16IN OD X 2-1/2IN LG, ALLOY	$ 219.00	1.0
	BEARING, BALL, ANGULAR CONTACT, SINGLE ROW, 1.7717IN ID, 4.7244IN OD, 2.2835IN WD	$ 599.48	4.0
	BEARING, BALL, CONRAD ANGULAR CONTACT, SINGLE ROW, 1.9685IN ID, 3.5433IN OD, 0.7874IN WD, OPEN, 50BA02 AFBM, 13452 IBI	$ 78.82	1.0
	BEARING, ROLLER, TAPERED ROLLER, SINGLE ROW, 4.5000IN ID, 8.3750IN OD, 2.6250IN WD, 41955 IBI, STRAIGHT BORE	$ 533.76	2.0
	BEARING, ROLLER, TAPERED, SINGLE ROW, 5.0000IN ID, 8.5000IN OD, 1.8750IN WD, 21952 CONE, 31020 CUP IBI	$ 389.00	2.0
	BOOTS, HEAVY DUTY PULL ON, KNEE HT, 10, RUBBER, BROWN, 15IN HT	$ 18.30	1.0
	BOX, MECHANICS TOOL, 14IN WD X 26IN LG X 12IN DP, PAINTED STEEL, LARGE 6 DRAWERS	$ 273.48	1.0
	BRUSH, ELECTRICAL SET, GENERATOR, 1-1/4IN X 2-3/4IN X 3/4IN, CARBON, 1, PIGTAIL, 21-8 8-81	$ 651.77	40.0
	CASING, PUMP, THRUST BEARING, CAST IRON	$ 675.00	1.0
	CHEMICAL, DENATURED ALCOHOL, LIQUID, 1 GAL CAN	$ 11.69	1.0
	CLAMP, SPRING, 1-7/8IN, CARB STL, ZINC PLATED	$ 1.74	6.0
	COCK, CURB, 1IN, COMPRESSION, PLASTIC	$ -	0.0
	COLLAR, THRUST, 13/16IN ID X 2-1/2IN OD X (1/4IN X 19/32IN) THK, CARBON STEEL	$ 211.00	1.0
	COMPOUND, PUMP SEALANT, 3.8 LITER PAIL, CMS 2000, WHITE	$ 931.00	1.0
	CONNECTOR, ELECTRICAL, BOLTED WEDGE, 795 KCMIL, AAC OR ACSR TO 397 OR 477 OR 556,, 4KCMIL AAC OR ACSR, ALUM	$ 143.10	6.0
	CONNECTOR, ELECTRICAL, SPLITBOLT, #4 SOLID OR #5 STR TO #8, 3-CONDUCTOR CONNECTOR	$ 25.36	8.0
	CONNECTOR, ELECTRICAL, TERMINAL, RING, 12-10 AWG, COMPRESSION, TIN PLATED COPPER, #10 STUD, NYLON INS	$ 47.00	100.0
	COUPLER, HOSE, PLUG, 1/4IN, MNPT, STEEL	$ 1.89	1.0
	COUPLING, PIPE, 10IN, MECHANICAL JOINT, CARBON STEEL	$ 206.00	2.0
	COUPLING, SHAFT, FLEXIBLE, 3/4IN X 7/8IN BORE, 2-1/8IN OD, 2-1/2IN LG, CARBON STEEL	$ 17.89	1.0
	COUPLING, SHAFT, HALF, DRIVE, 3.498IN, 5IN, 4-1/4IN, CARBON STEEL, CONSISTS OF - (1) 3-1/2H FHUBX3.498, (1) 3-1/2	$ 660.84	1.0
	COVER, BUCKET, 28IN WD X 28IN LG	$ 1,174.78	12.0
	COVER, SHOE, LOW TOP, SKID RESISTANT SOLES	$ 19.50	25.0
	CRAYON, SOAPSTONE, WHITE, 1/4IN DIA X 5IN LG, ROUND, 144 EA/BX	$ 1.15	19.0
	DEFLECTOR, BOILER, 15-1/2IN, SILICON CARBIDE, W/ CLIPS	$ 330.54	1.0
	DIFFUSER, ASH REMOVAL, 1 STONE PLATE, BASIC	$ 2,020.49	11.0
	DIFFUSER, CONICAL, 15-1/4IN DIA, NUTRIDE BONDED SILICON CARBIDE	$ 1,166.75	1.0
	ELBOW, PIPE ADAPTER, 1-1/4IN MNPT X 1-1/4IN CTS, BRASS, 90 DEG, .090 WALL POLYETHYLENE	$ -	0.0
	FUSE, FAST ACTING, 1-1/2 AMP, 600V, FIBERGLASS, FERRULE, 13/32IN X 1-1/2IN, D3	$ 14.18	2.0
	FUSE, TIME DELAY, 1 AMP, 600V, FIBERGLASS BODY, FERRULE, 0.41IN DIA X 1.5IN LG	$ 10.12	2.0
	FUSE, TIME-DELAY, 2 AMP, 600V, FIBER, FERRULE, 3/8IN X 1-1/2IN	$ 10.64	2.0
	FUSE, TIME-DELAY, 9 AMP, 600V, MELAMINE, FERRULE, 13/32IN X 1-1/2IN	$ 23.68	2.0
	GAS, ACETYLENE, 10 CU FT CYLINDER, MC	$ 10.74	1.0
	GAS, OXYGEN, 21 CU FT CYLINDER, SMALL TANK 20 OXY.	$ 2.99	1.0
	GAS, OXYGEN, 224 CU FT CYLINDER, LARGE TANK	$ 4.41	1.0
	GAS, PROTOCOL CAL GAS, CO2 11%, NOX 385 PPM, SO2 1375 PPM, BALANCE NITROGEN, 150 CU FT CYLINDER	$ 261.07	1.0
	GASKET, CONVEYOR LINE, 5IN, 5-3/8IN ID, 7-5/8IN OD, 3/8IN THK, STEEL REINFORCED AND RUBBER, ROUND, NUVALASTIC	$ 40.58	2.0
	GASKET, HEAD, 6-9/16IN ID, 7-7/16IN OD, 0.040IN THK, MONEL, ROUND	$ 74.65	1.0
	GASKET, PUMP, 12IN ID, 14-1/4IN OD, 3/64IN THK, VEGETABLE FIBER SHEET, ROUND	$ 3.42	1.0
	GASKET, SPIRAL WOUND, 3/4IN, 1IN ID, 2-3/4IN OD, 3/16IN THK, 900-1500 LB, 316 SS, NON-ASBESTOS	$ 5.54	2.0
	GASKET, SPIRAL WOUND, 4IN, 5IN ID, 6-7/8IN OD, 1/8IN THK, 150 LB, 304 SS, NON-ASBESTOS	$ 7.01	2.0
	GASKET, SPIRAL WOUND, 4IN, 5IN ID, 6-7/8IN OD, 5/32IN THK, 150 LB, 316L SS, FLEXITE SUPER	$ 14.57	2.0
	GATE, VALVE, 5IN ROTARY SLIDE TOTALLY ENCLOSED, 2-WAY, HIGH TEMP	$ 5,646.00	4.0
	GLASS, LEVEL GAUGE, FLAT PLAIN, 12-1/2IN WD X 13-3/8IN LG X 11/16IN THK, GLASS, CLEAR	$ 144.00	2.0
	HOSE, AIR, 3/8IN ID X 24IN LG, 3/8IN FMPT SWIVEL, RUBBER, 300 PSI	$ 5.10	1.0
	HOSE, FIRE, 1-1/2IN ID, 50FT LG, MNST X FNST, RUBBER, 500 PSI, RED COLLAPSIBLE, SYNTHETIC	$ 126.58	1.0
	HOUSING, BEARING, CAST STEEL	$ 138.92	1.0
	KIT, GASKET AND PACKING	$ 557.35	1.0
	KIT, LUBRICATION	$ 138.67	1.0
	LAMP, FLUORESCENT, 60W W, COOL WHITE, 1-PIN, 96IN LG, T-12, STD PKG/1	$ 19.80	9.0
	LAMP, FLUORESCENT, STRAIGHT, 35 W, RECESSED DOUBLE CONTACT, 96IN LG, T-12	$ 99.41	15.0
	METER, GAS SERVICE, DIAPHRAGM, 250 C.F.H., TEMPERATURE COMPENSATED, VISUAL, 5 LBS, 10 LT, ANSI B-109, KENTUCKY	$ 5,804.73	120.0
	NOZZLE, SPRAY, 3/4IN, MPT, STEEL	$ 1,439.62	10.0
	NOZZLE, WATER TIP DISCHARGE, .50IN HOLE, MPT, 416SS	$ 69.00	1.0
	NUT, LOCK, 1-1/8IN DIA, 12 UNF THD, STEEL, 2 GR, SET SCREW	$ 0.45	1.0
	OIL, AIR LUBE, 10 W/NR, 1 PINT BOTTLE, NON FLUID A88 NR	$ 5.48	1.0

Inventory Provided by Duke Energy Kentucky to Affiliate
For the Year Ended December 31, 2008

COMPANY_CHARGE	CATALOG_DESC	Values Sum of SumOfTRANS_AMT	Sum of SumOfTRANS_QTY
	OIL, INDUSTRIAL, GEAR SHC 634, ISO 460 VSC, 250 DEG F (482) DEG C FP, 55 GAL DRUM, API GRAVITY 35.2	$ 1,434.40	55.0
	O-RING, 4.109IN ID, 4.387IN OD, .139IN WD, VITON, 02-243	$ 4.04	2.0
	O-RING, 4.395IN ID, 4.673IN OD, .138IN WD, VITON, 245	$ 3.78	2.0
	PACKING SET, RING, .38INSQX3.44INID, (6) BRAIDED GRAFOIL	$ 17.97	1.0
	PACKING SET, SQ RING, BUTT CUT, 4IN ID X 5-1/4IN OD X 5/8IN THK, GRAPHITE CARBON YARN/FLEXIBLE GRAPHITE YARN, SET IS 1-2-2-2-1, 8 RINGS PE	$ 690.59	3.0
	PAD, TRANSFORMER BOX, 37-1/2IN WD X 43IN LG X 24IN DP, FIBERGLASS, 1PH,(6) 3/8IN 16THD INSERTS IN TOP SURFACE	$ 167.87	1.0
	PAINT, ENAMEL, SAFETY BLUE OSHA, GLOSS, 1 GAL CAN	$ 47.38	1.0
	PAINT, ENAMEL, SAFETY ORANGE OSHA, GLOSS, 1 GAL CAN	$ 59.20	1.0
	PAINT, ENAMEL, YELLOW, MACHINERY	$ 41.85	5.0
	PIN, CLEVIS, 1/2IN DIA, 1-5/8IN LG, STEEL	$ 14.36	1.0
	PIN, SPLIT, 3/16IN DIA, 2-1/2IN LG, STEEL	$ 0.12	3.0
	PIPE, EXTRUDED, 1IN NOM, 250 FT LG, POLYETHYLENE, PE 2406, SDR 11.5, 76 #, PLAIN	$ -	0.0
	PLUG, SPARK, IGNITION, 1G-4727-A, SUB ASSY C-982-0206	$ 1,239.48	16.0
	POLE, POWER, UTILITY, 35 FT, 5 CL, SOUTHERN YELLOW PINE, CHROMATED COPPER ARSENATE, ROUND TAPERED, 0.6 PCF	$ 113.95	1.0
	POLE, POWER, UTILITY, 40 FT, 4 CL, SOUTHERN YELLOW PINE, CHROMATED COPPER ARSENATE, ROUND TAPERED, 0.6 PCF	$ 949.17	5.0
	PUMP, ASH SLUICE	$ -	0.0
	RACK, 9 SLOT, REAR MOUNT	$ 395.70	1.0
	RAINGEAR, JACKET, XL, PVC/NOMEX/KEVLAR ARCLITE FR RAINGEAR, YELLOW, VENTED BACK W/FULL BODY HARNESS OPENING	$ 203.67	3.0
	RAINGEAR, JACKET, XXL, PVC/NOMEX/KEVLAR ARCLITE FR RAINGEAR, YELLOW, VENTED BACK W/FULL BODY HARNESS OPENING,	$ 83.16	1.0
	RAINGEAR, JACKET, XXXL, PVC/NOMEX/KEVLAR ARCLITE FR RAINGEAR, YELLOW, VENTED BACK W/FULL BODY HARNESS OPENING	$ 74.10	1.0
	RAINGEAR, OVERALLS, BIB, XXL, PVC/NOMEX/KEVLAR ARCLITE FR, YELLOW, ADJ STRAPS, REFLECTIVE STRIPES ON BOTH LEGS	$ 47.71	1.0
	RING, CHOKER, 1-1/2IN ID X 2-1/2IN OD X 9/16IN THK, STEEL	$ 64.00	1.0
	ROD, DRILL, 1/4IN, 3FT, STEEL, .167#/FT, OIL HARDENED	$ 8.18	3.0
	ROD, FLAME, 9IN LG, STEEL	$ 610.00	10.0
	SEAL, OIL, SINGLE LIP, 1.1250IN ID, 2.1250IN OD, 0.2500IN WD, CARBON STEEL	$ 14.22	2.0
	SEAL, OIL, SINGLE LIP, 2.1250IN ID, 3.5000IN OD, 0.3125IN WD, STEEL	$ 14.32	1.0
	SEAL, OIL, SOOTBLOWER, 0.5625IN ID, 1.1250IN OD, 0.2500IN WD, RUBBER	$ 10.20	2.0
	SHAFT, GEAR, 5/8IN DIA X 9-11/16IN LG, STEEL	$ 102.91	1.0
	SHIM, 0.002IN THK, 11-1/4IN ID X 16-1/2IN OD, STEEL	$ 13.00	1.0
	SOLUTION, H-6 CALCIUM HARDNESS BUFFER,, LIQUID, 500 ML BOTTLE	$ 138.90	6.0
	SOLUTION, SODIUM CHLORIDE/SODIUM NITROFERRICYANIDE, A-1 DRY, 1 OZ	$ 153.47	6.0
	SPACER, COLLAR, 2-1/2IN ID X 3-3/4IN OD X 5/8IN THK, STEEL	$ 965.72	2.0
	SPACER, FLANGE, 6IN ID X 8-3/4IN OD X 1-1/2IN THK, RUBBER	$ (0.57)	0.0
	STRAINER, PUMP, 5IN DIA X 8-1/2IN LG, SS AND STEEL	$ 201.00	1.0
	SWITCH, SAFETY, 600 VAC, 60 AMP, SINGLE THROW, NON HAZARDOUS, 3 PH	$ 866.00	1.0
	TAPE, ELECTRICAL, 1IN, RUBBER, RED, HEAT SHRINKABLE INSULATING	$ 368.40	7.0
	TAPE, ELECTRICAL, 2IN, RUBBER, RED, HEAT SHRINKABLE INSULATING	$ 473.46	6.0
	TRANSFORMER, IGNITION, 250VA, 22MA, 120-10000V	$ 115.00	1.0
	TRANSFORMER, PAD MOUNT, 167 KVA, 12470GY/7200 PRI, 240/120 SEC, 1 PH, 60 HZ, NO TAP, LOOPFEED/FUSED/DEADFRONT, BAYONET/WEAK LINK	$ 2,817.85	1.0
	TUBE, BOILER, STRAIGHT, 2-1/2IN OD, 0.281IN THK, 20FT LG, SEAMLESS, DEBURRED, ALLOY STEEL, SA-213-GR T9	$ 1,431.52	23.0
	VALVE, BALL, 2IN, CLASS 2500 / 3100, SOCKET WELD, A182-F22, MANUALLY ACTUATED, A182-F22, LIVE LOAD GLAND PACKING W/RAM31 HARDCOAT, LEVER	$ (6,156.00)	-3.0
	VALVE, DIFFERENTIAL PRESSURE REGULATING, 2 - 1/2IN	$ 1,890.00	1.0
	VALVE, DIFFERENTIAL PRESSURE REGULATING, 3, POPPET 3W, SPRING 7, GROUP 5	$ 2,660.00	1.0
	VALVE, NEEDLE, 3/8IN, COMPRESSION, THD BONNET, SS, HANDWHEEL, 316 SS	$ 64.61	1.0
	WASHER, FLAT, 1/16IN NOM, 5/64IN ID, 1/8IN OD, 1/32IN THK, SS	$ 0.10	2.0
	WASHER, FLAT, 7/8IN ID, 1-1/2IN OD, 5/32IN THK, BRASS	$ 24.60	1.0
	WATER, DRINKING, 5 GAL, PLASTIC BOTTLE	$ 12.12	3.0
	WIRE, LOCK, SS ASTM A580, 0.062IN	$ 11.58	1.0
010 Total		$ 37,567.15	627.0
100	OIL, TURBINE, ISO VG 32, 55 GALLON DRUM, DTE 732	$ 1,650.00	220.0
	RING, SEAL, 6-3/4IN OD, BRONZE	$ 894.00	2.0
100 Total		$ 2,544.00	222.0
Grand Total		$ 40,111.15	849.0

KRS 278.2205(2)(f)

F. For each USoA account and subaccount, a report that identifies whether the account contains costs attributable to regulated operations and non-regulated operations. The report shall also identify whether the costs are joint costs that cannot be directly identified. A description of the methodology used to apportion each of these costs shall be included and the allocation methodology shall be consistent with the provisions of KRS 278.2203.[24]

Duke Energy Kentucky maintains its books and records in accordance with the Federal Energy Regulatory Commission's ("FERC") Uniform System of Accounts ("USoA"). The FERC USoA designates specific accounts where non-regulated transactions are to be recorded. Costs related to Duke Energy Kentucky's unregulated activities, as identified in Attachment D-1, are charged to various 415, 417 and 418 accounts, as indicated by the name of the accounts, in accordance with the FERC USoA requirements. The charges in these accounts were for various non-regulated operations such as joint trench operations and lease revenue related to non-utility property. Unregulated costs are charged directly to these accounts. The remaining transactions on Duke Energy Kentucky's books are related to regulated utility operations.

Attachment F-1 consists of the USoA chart of accounts for Duke Energy Kentucky as of March 1, 2009. The list includes both the account number and a brief description of what is included in the account.

---

(2) In allocating costs between regulated and non-regulated activities, a utility shall utilize one (1) of the following cost allocation methods:

(a) The fully distributed cost method; or

(b) A cost allocation method recognized or mandated by the rules of the SEC promulgated pursuant to 15 U.S.C. sec. 79, et seq., or promulgated by the FERC or by the USDA. KY. REV. STAT. ANN. § 278.2203(2) (Banks-Baldwin 2006).

Duke Energy Kentucky
Chart of Accounts as of March, 2009

Duke Energy Kentucky
Chart of Accounts as of March, 2009

Account - Account Description
0101000 - Property Plant and Equipment
0101025 - Gps - General Plant
0101150 - Common Plant in Service
0106000 - Comp Const Unclassified
0106102 - CCNC - Common
0107000 - SCHM Cwip
0108000 - Accumulated DDandA - Ppande
0108101 - Accum DD&A- Common PP&E
0108151- Common Accum Dep - COR
0108301 - Accum Depreciation COR
0108620 - RWIP - Reg Liab
0111100 - Acc Prov - Amor Elec Plt in Ser
0111110 - Common Accum Amort
0116000 - Other Electric Plant Adj
0121000 - NonUtil Prop - General
0122000 - DDandA - NonUtil Prop - Gen
0123999 - Intercompany Rollup Account
0124090 - Invst-Campbell Co Bus Develop
0131155 - Cash PNC 0659
0131158 - Cash JPM Chase 9831
0131159 - Cash JPM Chase 9831
0131160 - Cash JPM Chase 7099
0135101 - Oth Dep - Petty Cash Fund
0142100 - Cust Accts - Special Billed Acct
0142200 - Cust Acct - Edp
0142801 - A/R-Passport Interface
0142830 - A/R-Merch/Jobb/Contract Work
0142880 - Sale of Customer Receivables
0142982 - Def Rev Rec - Unbilled Fuel
0143010 - Aetna - Supplemental - Payroll Ded
0143011 - A/R - Other - Gen Acctg
0143030 - ADandD Covrg - Supplmntl - P/R Ded
0143110 - Misc A/R - Clearing
0143151 - Other A/R-Misc Non-Utility
0143155 - Other A/R - Miscelleneous
0143170 - Emp Portion - Med Ins Prem
0143180 - Ret Med Life Den/Prem Withheld
0143221 - LT Asset: Interest Receiv
0143222 - LT Tax Reclass Fed Dr
0143223 - LT Tax Reclass State Dr

Duke Energy Kentucky
Chart of Accounts as of March, 2009

0143240 - Emp Part Den Ins Payroll Ded
0143280 - Dependent Care Spending Account
0143320 - Mar Billed - Edp
0143430 - Mar Bulk Power Clearing
0143605 - A/R-DPL CD/CCD Operations
0143651 - A/R-DPL CD/CCDcapex
0143870 - Cust Billing-Outdoor Light
0143927 - Employee Receivables
0143955 - A/R-Sold
0143995 - A/R Wholesale Pwr - Estimate
0144100 - SCHM Uncollectible Accrual Electric
0144700 - Prov for MARBS Uncollectibles
0145004 - IC Moneypool - ST Notes Receiv
0145890 - N/R - Rp Cin Receivables
0146000 - Electric Interunit Account
0151126- Fuel Stock - Propane
0151130 - Coal Stock
0151131 - Coal Stock in Transit
0151140 - Diesel Fuel Stock
0151700 - Propane Inventory
0154100 - Inventory
0154102 - Common M&S
0154110 - M&S Supply Inventory - Joint Owner
0154140 - Misc Inventory
0154200 - Limestone Inventory
0154410 - Working Stock
0154900 - Reserve for loss on inventory
0158180 - Reg EA-SO2 Native Current
0158280 - Reg EA-NOx Native Current
0163110 - Stores Expense
0165021 - Prepayments (sch M)
0165075 - Interco Prepaid Insu SchM
0165100 - Unexpired Insurance
0165400 - Misc Prepaid Expenses
0165520 - Collateral Asset
0165970 - Current Tax Reclass State Dr
0165990 - Current Tax Reclass Fed Dr
0171104 - Cur Asset: Interest Receiv
0173100 - Unbilled Revenue Receivable
0173110 - Accounts Receivable Sold
0174100 - Other Current Assets
0174273 - Gas Stored Current
0174995 - Native Deferred MTM Asset
0175001 - Deriv Assets - Noncashflw - ST

Duke Energy Kentucky
Chart of Accounts as of March, 2009

0176004 - 3rd Party Derivative Int Receivable
0181021 - Unamortized Debt Expense
0181814 - 7 875 SnrUnsecDebs 9/15/09
0181839 - ULHP 50M 5 75 3/10/16
0181840 - ULHP 65M 6 2 3/10/2036
0181843 - ULHP PCB 06B
0181845 - 5 0 Debs 12/15/14
0181848 - Corp Revolver 2006
0181869 - ULHP PCB 06A
0182320 - Regulatory Asset - Inc Tax
0182376 - Deferred Project Costs
0182401 - Deferred DSM Costs
0182402 - ARO Other Regulatory Asset
0182403 - Gas ARO Other Regulatory Asset
0182700 - Hurricane Ike Regulatory Asset
0182750 - 2005 Merger Transaction Costs
0182910 - LERP Delayed Cash Costs
0182940 - ULHP 2006 Electric Rate Case
0182950 - ULHP 2005 Gas Rate Case
0182975 - AMRP Study Costs
0183000 - Prelim Survey and Investigation
0184100 - Fringe Benefits Clearing
0184450 - Charges To Be Tranferred(Go On
0184610 - Ind Labor Union Clearing
0185000 - Temporary Facilities
0186051 - Joint Owner Misc Deferred Exp
0186120 - Misc. Wip - Fp Dist. Wids
0186301 - Lease Receivable
0186341 - Unearned Income
0186342 - Vacation Accrual Regulatory Asset
0186430 - Error Suspense - Capital Acctg
0186470 - Error Suspense - Corp Payroll
0186625 - Intang Asset Fas87-Qual Pen
0186770 - Misc Deferred Debits Debt
0186802 - Accrued Pension Post Retire FAS158
0186984 - Other Long-Term Assets
0189100 - Schm Unamt Loss Reaq Dt
0190001 - Adit: Prepaid: Federal Taxes
0190002 - Adit: Prepaid: State Taxes
0190008 - Deferred Federal Tax Asset - Current
0190009 - Deferred SIT - Current
0190015 - LT Def Credit for state Liab-190
0190021 - LT Def credit for state liab(190)
0190052 - Accum Deferred SIT-OCI

Duke Energy Kentucky
Chart of Accounts as of March, 2009

0190053 - Accum Deferred FIT-Plant
0190054 - Accum Deferred SIT-Plant
0191400 - Unrecovered Purch Gas Cost
0191800 - Unrec Purch Gas - Unbilled Rev
0201000 - Common Stock Issued
0207001 - Premium on Common Stock
0208000 - Donations From Stockholder
0208010 - Donat Recvd From Stkhld Tax
0211006 - PIC - Sharesaver
0216000 - Unapprop Retained Earnings
0216100 - Unappr Undistr Subsid Earnings
0224034 - LT Debt - Current Portion
0224050 - LTD 4th & Walnut
0224440 - LT Notes Payable
0224839 - ULHP 50M 5 75 3/10/16
0224840 - ULHP 65M 6 2 3/10/2036
0224843 - ULHP PCB 06B
0224844 - Rus Obligation
0224869 - ULHP PCB 06A
0226021- Unamort Discount-Curr
0226814 - 7 875 Snr Unsec Debs 9/15/09
0226839 - ULHP 50M 5 75 3/10/16
0226840 - ULHP 65M 6 2 3/10/2036
0226844 - Rus Obligation
0227101 - LT Capital Lease Obligation
0227102- Noncurrent Capital Lease-Meter
0228315 - Schm Opeb (Fas106)
0228325 - Schm Post Emp FAS 112
0228390 - Res-Fas 112 Postemployment Ben
0228440 - Reserve - MGP Sites FERC 228
0229000 - Accum. Prov. For Rate Refunds
0230951 - ARO sch M
0232002 - A/P - Misc - Gen - Acctg
0232016 - AP PS8.9 Vendors Payable
0232017 - Other Current Liabilities-Comp
0232039 - Payable 401K Incentive Match
0232101 - EAP 10 customer charge
0232111 - Vouchers Payable-Passport
0232141 - Unvouchered Stock Matls Receipt
0232152 - A/P Purchased Gas
0232170 - Accounts Payable - Coal
0232175 - Limestone and Freight Payable
0232180 - Accounts Payable - Oil Stocks
0232181 - Natural Gas Payable

Duke Energy Kentucky
Chart of Accounts as of March, 2009

0232361 - A/P Fuelfunds - Customer Donations
0232460 - Bulk Power Marketing Payable
0232892 - A/P Miscellaneous
0232955 - A/P Wholesale Pwr - Estimate
0232996 - Capital - Accruals
0233002 - Notes Pay St - DEGT Only
0233150 - IC Moneypool - ST Notes Pay
0235140 - Special Customer Deposits
0236001 - State It Payable Other
0236041 - Accrued Property Tax
0236150 - St/Local Unemployment Tax Liab
0236700 - Employer FICA Tax Liab
0236750 - Federal Unemployment Tax Liab
0236810 - Accrued Franchise Tax
0236820 - Misc NonUtility
0236906 - Sales and Use Tax Payable
0236965 - Accrued SIT - Prior Year
0236981 - Fed Inc Tax Payable - Prev Yr
0236990 - Fed Inc Tax Payable - Current
0236994 - LT Liability: Federal UTP
0236995 - LT Contra-Liab GC: Fed
0237038 - LT Interest Accrued
0237110 - Bonds Interest Payable
0237200 - Curr Interest Accrued
0237221 - Int Accrued on MW Dep
0241110 - State Income Tax Wh - Employee
0241150 - Federal Income Tax Wh - Employee
0241160 - FICA Withheld - Employee
0241311 - County School Taxes Payable
0241320 - NC State Sales Tx on Elc Enrgy
0241335 - Local Taxes Withheld
0241348 - Franchise Tax Payable
0242033 - Wages Payable - Accrual
0242381 - Retirement Bank Accrual
0242460 - Prov For Incentive Ben Prog
0242461 - Prior Year Incentive Accrual
0242490 - Vacation Carryover
0242650 - Accrued Payable - Other
0242997 - Misc Liab - FAS 87 NQ
0242998 - Misc Liab - FAS 106
0242999 - Misc Liab - FAS 112
0243050 - 2156_CLTD_CAP_LEASE
0243105 - Current Portion of Cap Lease Obligation
0244001 - Deriv Liab - Noncashflw - S - T

Duke Energy Kentucky
Chart of Accounts as of March, 2009

0245003 - Accrued Interest Exp - Swaps
0245004 - 3rd Party Derivative Int Payable
0252050 - Gas Contributions Post 1992
0253016 - Unclaimed Property
0253044 - OPEB - Health
0253046 - Pension Cost Adj
0253047 - Pension Cost Adj (ODC)
0253130 - Gas Refunds/Recl Adj Due Cust
0253270 - Suplmtl Penison-Excess Plan
0254100 - Regulatory Liablility - Inc Tax
0254101 - Deferred Regulatory Liability
0254210 - Reg Liability Emission Swaps
0254220 - Reg Liab Em Swp GAAP Int Asset
0255000 - Accum Def Inv Tax Credits
0255201 - Def ITC-Non-Regulated
0282100 - Adit: PpandE: Federal Taxes
0282101 - Adit: PpandE: State Taxes
0282102 - LT Def tax liability: Fed-282
0282104 - LT Def tax liability - Fed(282)
0283011 - Current Portion - Dit
0283012- Current Portion - DSIT
0283100 - Adit: Other: Federal Taxes
0283101 - Adit: Other: State Taxes
0401100 - Non-reg Operation Expense
0403002 - Depr - Expense
0404200 - Amort of Elec Plt - Software
0407907 - Regulatory Asset-Deferral Acct
0408121 - Taxes Property - Operating
0408150 - State Unemployment Tax
0408151 - Federal Unemployment Tax
0408152 - Employer FICA Tax
0408205 - Highway Use Tax
0408700 - Fed Social Security Tax - Elec
0408820 - Misc NonUtility Tax
0408960 - Pr FandT Loading
0409102 - SIT Exp - Utility
0409190 - Federal Income Tax - Electric CY
0409202 - State Income Tax NonUtility
0409220 - Federal Income Tax - NonUtility CY
0410100 - Dfit: Utility: Current Year
0410102 - Dsit: Utility: Current Year
0410240 - Dfit: Non - Utility: Curr Year
0410242 - Dsit: Non - Utility: Curr Year
0411100 - Dfit: Utility: Curr Year Cr

Duke Energy Kentucky
Chart of Accounts as of March, 2009

0411101 - Dsit: Utility: Curr Year Cr
0411240 - Dfit: Non - Utility: Curr Yr Cr
0411242 - Dsit: Non - Utility: Curr Yr Cr
0411410 - Invest Tax Credit Adj - Electric
0415100 - Other Misc Gas Rev
0415530 - Marketing Service Revenue
0416010 - Merch Cost of Goods - Electric
0416330 - Miscellaneous Expense
0417000 - Misc Revenue
0418002 - Nonop Rental Inc - Florence
0418012 - Non Oper Depr - Florence Fac
0419040 - Interest Inc (sch M)
0419170 - AFUDC Equity
0419240 - Miscellaneous Interest
0419429 - IC Moneypool - Interest Inc
0419890 - Int Inc-Cin Rec Co LLC
0426100 - Donations
0426400 - Exp/Civic and Political Activity
0426415 - Misc Inc Deduct Civic/Poli
0426508 - Inc Deduction-Other Inc & Exp
0426510 - Other
0426512 - Donations
0426521 - Sale Of A/R Fees
0426540 - Employee Service Club Dues
0427220 - Interest on L - T Note Payable
0428025 - Amortization of Debt Discount
0428100 - Amort of Debt Discount and Exp
0428165 - Amort on Loss of Reaquired Debt
0430216 - IC Moneypool - LT Interest Exp
0431002 - Int Exp - Other
0431003 - Other Interest - Swaps
0431020 - Interest Exp-Cust Service Dep
0431130 - Interest Exp - Capital Lease
0431400 - Int/Other Notes and Acct Pay
0431550 - Interest Exp-Assign From Svc
0431900 - Interest Expense Other
0432000 - AFUDC Debt Component
0440000 - Residential
0440990 - Residential Unbilled Rev
0442100 - General Service
0442190 - General Service Unbilled Rev
0442200 - Industrial Service
0442290 - Industrial Svc Unbilled Rev
0445000 - Other Sales To Public Auth

Duke Energy Kentucky
Chart of Accounts as of March, 2009

0445090 - OPA Unbilled
0447150 - Sales For Resale - Outside
0448000 - Interdepartmental Sales
0449100 - Provisions For Rate Refunds
0451100 - Miscellaneous Items
0454200 - Pole and Line Attachments
0454400 - Other Electric Rents
0456025 - RSG Rev - MISO Make Whole
0456075 - Data Processing Service
0456111 - Other Transmission Revenues
0456970 - Wheel Transmission Rev - ED
0456980 - Wheel Transmission Rev - EC
0480000 - Residential Sales-Gas
0480990 - Gas Residential Sales-Unbilled
0481000 - Industrial Sales-Gas
0481090 - Gas Industrial Sales Unbilled
0481200 - Gas Commercial Sales
0481290 - Gas Commercial Sales Unbilled
0482000 - Other Sales To Public Auth
0482090 - Gas OPA Unbilled
0482200 - Gas Public St Hwy Ltng
0484000 - 3rd Party Gas Sales
0488000 - Misc Service Revenue
0488100 - Misc. Service Revenue I/C
0489000 - Transp Gas of Others
0489010 - Rev Transp of Gas - I/C
0489020 - Comm Gas Transp Only
0489025 - Comm Gas Transp Unbilled
0489030 - Indust Gas Transp Only
0489035 - Indust Gas Transp Unbilled
0489040 - OPA Gas Transp Only
0489045 - OPA Gas Transp Unbilled
0493010 - Rent from Gas Properties-IC
0495021 - Sales Use Tax Collect Fee
0501110 - Coal Consumed - Fossil Steam
0501150 - Coal Handling
0501160 - Coal Sampling and Testing
0501180 - Sale of Fly Ash - Revenues
0501190 - Sale of Fly Ash - Expenses
0501310 - Oil Consumed - Fossil Steam
0501350 - Oil Handling Expense
0502040 - Cost of Lime
0502100 - Fossil Steam Exp - Other
0506000 - Misc Fossil Power Expenses

Duke Energy Kentucky
Chart of Accounts as of March, 2009

0507010 - IC Steam Pwr Gen Op Rents
0509030 - SO2 Emission Expense
0511000 - Maint of Structures - Steam
0512100 - Maint of Boiler Plant - Other
0513100 - Maint of Electric Plant - Other
0547100 - Natural Gas
0547701 - Propane Gas
0548200 - Prime Movers - Generators - Ct
0552000 - Maintenance of Structures - Ct
0555028 - Purch Pwr - Non-native - net
0555202 - Purch Power-Fuel Clause
0557000 - Other Expenses - Oper
0557980 - Retail Deferred Fuel Expenses
0561100 - Load Dispatch - Reliability
0562000 - Station Expenses
0565000 - Transm of Elec By Others
0565855 - Tran Elec By Oth - ED- Interco
0566000 - Misc Trans Exp - Other
0567010 - IC Trans Op Rents
0569000 - Maint of Structures - Trans
0569100 - Maint of Computer Hardware
0569200 - Maint of Computer Software
0570100 - Maint Stat Equip - Other_Trans
0581004 - Load Dispatch-Dist of Elec
0582100 - Station Expenses - Other - Dist
0586000 - Meter Expenses - Dist
0587000 - Cust Install Exp - Other Dist
0588100 - Misc Distribution Exp - Other
0589010 - IC Dist Op Rents
0597000 - Maintenance of Meters - Dist
0711000 - Gas Boiler Labor
0728000 - Liquid Petroleum Gas
0735000 - Gas Misc Production Exp
0736020 - Gas Raw Material - Rents
0742000 - Maint Gas Production Expense
0801000 - Purchases Gas and Ngl
0801001 - Purchases Gas and Ngl - Aff
0803290 - Miscellaneous Expense
0804110 - Unproductive Time Distributed
0804210 - Vacations
0804220 - Holidays
0804240 - Inclement Weather
0804250 - Jury Duty
0804260 - Death in Family

Duke Energy Kentucky
Chart of Accounts as of March, 2009

0804280 - Scheduled Time Earned Unworked
0804290 - Other Excused Absences
0804330 - Sick
0807000 - Gas Purchased Expenses
0807100 - I/C Gas Purchased Expenses
0813001 - Other Gas Supply Expenses
0871000 - Distribution Load Dispatching
0874000 - Mains and Services
0879000 - Customer Installation Expense
0881000 - Intercompany Operating Rents
0887000 - Maintenance of Mains
0892000 - Maintenance of Services
0894000 - Maint - Other Distribution Equi
0901000 - Supervision - Cust Accts
0902000 - Meter Reading Expense
0903200 - Cust Billing and Acct
0903300 - Cust Collecting - Local
0904001 - Bad Debt Expense
0904003 - Cust Acctg-Loss On Sale-A/R
0908140 - Economic Development
0908160 - Cust Assist Exp - General
0910000 - Misc Cust Serv/Inform Exp
0920000 - A and G Salaries
0921100 - Employee Expenses
0921110 - Relocation Expenses
0921200 - Office Expenses
0921400 - Computer Services Expenses
0921450 - A/G Mat/Exp-Elec -Billed DPL
0921540 - Computer Rent (Go Only)
0921580 - Allocated Computer Expenses
0921600 - Other
0921980 - Office Supplies and Expenses
0922000 - Admin Exp Transfer
0923000 - Outside Services Employed
0924000 - Property Insurance
0924100 - Admin - Ehands Expense
0924980 - Property Insurance For Corp.
0925000 - Injuries and Damages
0925200 - Injuries and Damages - Other
0926000 - Empl Pensions and Benefits
0927001 - General and Administration
0928006 - State Reg Comm Proceeding
0928031 - Prof Fees Legal
0928055 - Fed Energy Reg Com Proceed

Duke Energy Kentucky
Chart of Accounts as of March, 2009

0929500 - Admin Exp Transf
0930200 - Misc General Expenses
0930210 - Industry Association Dues
0930220 - Exp of Servicing Securities
0930240 - Director'S Expenses
0930600 - Leased Circuit Charges - Other
0930700 - Research and Development
0930940 - General Expenses
0931001 - Rents - AandG
0931008 - A and G Rents IC
0935100 - Maint General Plant-Elec